IEC 60086-3

Edition 4.0 2016-05
REDLINE VERSION

INTERNATIONAL STANDARD

colour inside

Primary batteries –
Part 3: Watch batteries

Withdrawn
IECNORM.COM : Click to view the full PDF of IEC 60086-3:2016 RLV

IEC 60086-3:2016-05 RLV(en)

THIS PUBLICATION IS COPYRIGHT PROTECTED
Copyright © 2020 IEC, Geneva, Switzerland

All rights reserved. Unless otherwise specified, no part of this publication may be reproduced or utilized in any form or by any means, electronic or mechanical, including photocopying and microfilm, without permission in writing from either IEC or IEC's member National Committee in the country of the requester. If you have any questions about IEC copyright or have an enquiry about obtaining additional rights to this publication, please contact the address below or your local IEC member National Committee for further information.

IEC Central Office
3, rue de Varembé
CH-1211 Geneva 20
Switzerland

Tel.: +41 22 919 02 11
info@iec.ch
www.iec.ch

About the IEC
The International Electrotechnical Commission (IEC) is the leading global organization that prepares and publishes International Standards for all electrical, electronic and related technologies.

About IEC publications
The technical content of IEC publications is kept under constant review by the IEC. Please make sure that you have the latest edition, a corrigendum or an amendment might have been published.

IEC publications search - webstore.iec.ch/advsearchform
The advanced search enables to find IEC publications by a variety of criteria (reference number, text, technical committee,…). It also gives information on projects, replaced and withdrawn publications.

IEC Just Published - webstore.iec.ch/justpublished
Stay up to date on all new IEC publications. Just Published details all new publications released. Available online and once a month by email.

IEC Customer Service Centre - webstore.iec.ch/csc
If you wish to give us your feedback on this publication or need further assistance, please contact the Customer Service Centre: sales@iec.ch.

Electropedia - www.electropedia.org
The world's leading online dictionary on electrotechnology, containing more than 22 000 terminological entries in English and French, with equivalent terms in 16 additional languages. Also known as the International Electrotechnical Vocabulary (IEV) online.

IEC Glossary - std.iec.ch/glossary
67 000 electrotechnical terminology entries in English and French extracted from the Terms and definitions clause of IEC publications issued between 2002 and 2015. Some entries have been collected from earlier publications of IEC TC 37, 77, 86 and CISPR.

Withdrawn
IECNORM.COM : Click to view the full PDF of IEC 60335-2-16:2016 RLV

IEC 60086-3

Edition 4.0 2016-05
REDLINE VERSION

INTERNATIONAL STANDARD

colour inside

Primary batteries –
Part 3: Watch batteries

Withdrawn
IECNORM.COM : Click to view the full PDF of IEC 60086-3:2016 RLV

INTERNATIONAL
ELECTROTECHNICAL
COMMISSION

ICS 29.220.10; 39.040.10

ISBN 978-2-8322-3439-6

Warning! Make sure that you obtained this publication from an authorized distributor.

CONTENTS

FOREWORD 4
INTRODUCTION 6
1 Scope 7
2 Normative references 7
3 Terms and definitions 7
4 Physical requirements 8
4.1 Battery dimensions, symbols and size codes 8
4.2 Terminals 10
4.3 Projection of the negative terminal (h_5) 10
4.4 Shape of negative terminal 10
4.5 Mechanical resistance to pressure 11
4.6 Deformation 11
4.7 Leakage 11
4.8 Marking 12
4.8.1 General 12
4.8.2 Disposal 12
5 Electrical requirements 12
5.1 Electrochemical system, nominal voltage, end-point voltage and open-circuit voltage 12
5.2 Closed circuit voltage U_{CC} (CCV), internal resistance and impedance 13
5.3 Capacity 13
5.4 Capacity retention 13
6 Sampling and quality assurance 13
~~6.1 General ..... 13~~
~~6.2 Sampling ..... 13~~
~~6.2.1 Testing by attributes ..... 13~~
~~6.2.2 Testing by variables ..... 13~~
~~6.3 Product quality indices ..... 13~~
7 Test methods 14
7.1 Shape and dimensions 14
7.1.1 Shape requirement 14
7.2 Electrical characteristics 14
7.2.1 Environmental conditions 14
7.2.2 Equivalent circuit – effective internal resistance – DC method 14
7.2.3 Equipment 15
7.2.4 Measurement of open-circuit voltage U_{OC} (OCV) and closed circuit voltage U_{CC} (CCV) 16
7.2.5 Calculation of the internal resistance R_i 17
7.2.6 Measurement of the capacity 17
7.2.7 Calculation of the internal resistance R_i during discharge in case of method A (optional) 19
7.3 Test methods for determining the resistance to leakage 21
7.3.1 Preconditioning and ~~previous~~ initial visual examination 21
7.3.2 High temperature and humidity test 21
7.3.3 Test by temperature cycles 21
8 Visual examination and acceptance conditions 22

IECNORM.COM : Click to view the full PDF of IEC 60086-3:2016 RLV
Withdrawn

8.1 Preconditioning 22
8.2 Magnification 22
8.3 Lighting 22
8.4 Leakage levels and classification 22
8.5 Acceptance conditions 24
Annex A (normative) Designation 25
Bibliography 26

Figure 1 – Dimensional drawing 8
Figure 2 – Shape of negative terminal 11
Figure 3 – Shape requirement 14
Figure 4 – Schematic voltage transient 15
Figure 5 – Curve: $U = f(t)$ 16
Figure 6 – Circuitry principle 16
Figure 7 – Circuitry principle for method A 18
Figure 8 – Circuitry principle for method B 19
Figure 9 – Test by temperature cycles 21

Table 1 – Dimensions and size codes 9
Table 2 – Dimensions and size codes 10
Table 3 – Minimum values of l_1 11
Table 4 – Applied force F by battery dimensions 11
Table 5 – Standardised electrochemical systems 12
Table 6 – Test method for U_{cc} (CCV) measurement 17
Table 7 – Test method A for U_{cc} (CCV) measurement 18
Table 8 – Discharge resistance (values) 20
Table 9 – Storage conditions for the recommended test 21
Table 10 – Storage conditions for optional test 21
Table 11 – Leakage levels and classification *(1 of 2)* 23

Withdrawn
IECNORM.COM : Click to view the full PDF of IEC 60086-3:2016 RLV

INTERNATIONAL ELECTROTECHNICAL COMMISSION

PRIMARY BATTERIES –

Part 3: Watch batteries

FOREWORD

1) The International Electrotechnical Commission (IEC) is a worldwide organization for standardization comprising all national electrotechnical committees (IEC National Committees). The object of IEC is to promote international co-operation on all questions concerning standardization in the electrical and electronic fields. To this end and in addition to other activities, IEC publishes International Standards, Technical Specifications, Technical Reports, Publicly Available Specifications (PAS) and Guides (hereafter referred to as "IEC Publication(s)"). Their preparation is entrusted to technical committees; any IEC National Committee interested in the subject dealt with may participate in this preparatory work. International, governmental and non-governmental organizations liaising with the IEC also participate in this preparation. IEC collaborates closely with the International Organization for Standardization (ISO) in accordance with conditions determined by agreement between the two organizations.

2) The formal decisions or agreements of IEC on technical matters express, as nearly as possible, an international consensus of opinion on the relevant subjects since each technical committee has representation from all interested IEC National Committees.

3) IEC Publications have the form of recommendations for international use and are accepted by IEC National Committees in that sense. While all reasonable efforts are made to ensure that the technical content of IEC Publications is accurate, IEC cannot be held responsible for the way in which they are used or for any misinterpretation by any end user.

4) In order to promote international uniformity, IEC National Committees undertake to apply IEC Publications transparently to the maximum extent possible in their national and regional publications. Any divergence between any IEC Publication and the corresponding national or regional publication shall be clearly indicated in the latter.

5) IEC itself does not provide any attestation of conformity. Independent certification bodies provide conformity assessment services and, in some areas, access to IEC marks of conformity. IEC is not responsible for any services carried out by independent certification bodies.

6) All users should ensure that they have the latest edition of this publication.

7) No liability shall attach to IEC or its directors, employees, servants or agents including individual experts and members of its technical committees and IEC National Committees for any personal injury, property damage or other damage of any nature whatsoever, whether direct or indirect, or for costs (including legal fees) and expenses arising out of the publication, use of, or reliance upon, this IEC Publication or any other IEC Publications.

8) Attention is drawn to the Normative references cited in this publication. Use of the referenced publications is indispensable for the correct application of this publication.

9) Attention is drawn to the possibility that some of the elements of this IEC Publication may be the subject of patent rights. IEC shall not be held responsible for identifying any or all such patent rights.

This redline version of the official IEC Standard allows the user to identify the changes made to the previous edition. A vertical bar appears in the margin wherever a change has been made. Additions are in green text, deletions are in strikethrough red text.

IECNORM.COM : Click to view the full PDF of IEC 60086-3:2016 RLV
Withdrawn

International Standard IEC 60086-3 has been prepared by IEC technical committee 35: Primary cells and batteries, and ISO technical committee 114: Horology.

This fourth edition cancels and replaces the third edition published in 2011. This edition constitutes a technical revision.

This edition includes the following significant technical changes with respect to the previous edition:

a) A harmonization of the cell sizes and service output tests with IEC 60086-2;
b) Clarifications of Clauses 6: Sampling and Quality Assurance, 7: Test methods, and 8: Visual examination and acceptance condition;
c) Harmonization of temperature and humidity conditions with IEC 60086-1.

This publication is published as a double logo standard.

The text of this standard is based on the following documents:

FDIS	Report on voting
35/1359/FDIS	35/1362/RVD

Full information on the voting for the approval of this standard can be found in the report on voting indicated in the above table.

This publication has been drafted in accordance with the ISO/IEC Directives, Part 2.

A list of all parts in the IEC 60086 series, published under the general title *Primary batteries*, can be found on the IEC website.

The committee has decided that the contents of this publication will remain unchanged until the stability date indicated on the IEC website under "http://webstore.iec.ch" in the data related to the specific publication. At this date, the publication will be

- reconfirmed,
- withdrawn,
- replaced by a revised edition, or
- amended.

IMPORTANT – The "colour inside" logo on the cover page of this publication indicates that it contains colours which are considered to be useful for the correct understanding of its contents. Users should therefore print this publication using a colour printer.

Withdrawn
IECNORM.COM : Click to view the full PDF of IEC 60086-3:2016 RLV

INTRODUCTION

This part of IEC 60086 provides specific requirements and information for primary watch batteries. This part of IEC 60086 was prepared through joint work between the IEC ~~TC 35~~ and ISO ~~TC 114~~ to benefit primary battery users, watch designers and battery manufacturers by ensuring the best compatibility between batteries and watches.

This part of IEC 60086 will remain under continual scrutiny to ensure that the publication is kept up to date with the advances in both battery and watch technologies.

NOTE Safety information ~~can be found~~ is available in IEC 60086-4 and IEC 60086-5.

Withdrawn
IECNORM.COM : Click to view the full PDF of IEC 60086-3:2016 RLV

PRIMARY BATTERIES –

Part 3: Watch batteries

1 Scope

This part of IEC 60086 specifies dimensions, designation, methods of tests and requirements for primary batteries for watches. In several cases, a menu of test methods is given. When presenting battery electrical characteristics and/or performance data, the manufacturer specifies which test method was used.

2 Normative references

The following documents, in whole or in part, are normatively referenced in this document and are indispensable for its application. For dated references, only the edition cited applies. For undated references, the latest edition of the referenced document (including any amendments) applies.

IEC 60086-1~~-[1]~~:2015, *Primary batteries – Part 1: General*

IEC 60086-2~~-[2]~~:2015, *Primary batteries – Part 2: Physical and electrical specifications*

IEC 60086-4:~~2007~~ 2014, *Primary batteries – Part 4: Safety of lithium batteries*

IEC 60086-5:-[3], *Primary batteries – Part 5: Safety of batteries with aqueous electrolyte*

~~IEC 60410, *Sampling plans and procedures for inspection by attributes*~~

~~ISO 2859 (all parts), *Sampling procedures for inspection by attributes*~~

~~ISO 3951(all parts as applicable), *Sampling procedures for inspection by variables*~~

3 Terms and definitions

For the purposes of this document, the terms and definitions given in IEC 60086-1 as well as the following terms and definitions apply.

3.1
capacitive reactance
part of the internal resistance, that leads to a voltage drop during the first seconds under load

3.2
capacity
electric charge (quantity of electricity) which a cell or battery can deliver under specified discharge conditions

---

~~[1] To be published in 2011.~~

~~[2] To be published in 2011.~~

[3] To be published ~~in 2011~~.

IECNORM.COM : Click to view the full PDF of IEC 60086-3:2016 RLV
Withdrawn

Note 1 to entry: The SI unit for electric charge is the coulomb (1 C = 1 As) but, in practice, capacity is usually expressed in ampere hours (Ah).

3.3
fresh battery
undischarged battery 60 days maximum after date of manufacture

3.4
ohmic drop
part of the internal resistance that leads to a voltage drop immediately after switching the load on

4 Physical requirements

4.1 Battery dimensions, symbols and size codes

Dimensions and tolerances of batteries for watches shall be in accordance with Figure 1, Table 1 and Table 2. The dimensions of the batteries shall be tested in accordance with 7.1.

The symbols used to denote the various dimensions in Figure 1 are in accordance with IEC 60086-2:2015, Clause 4.

Dimensions in millimetres

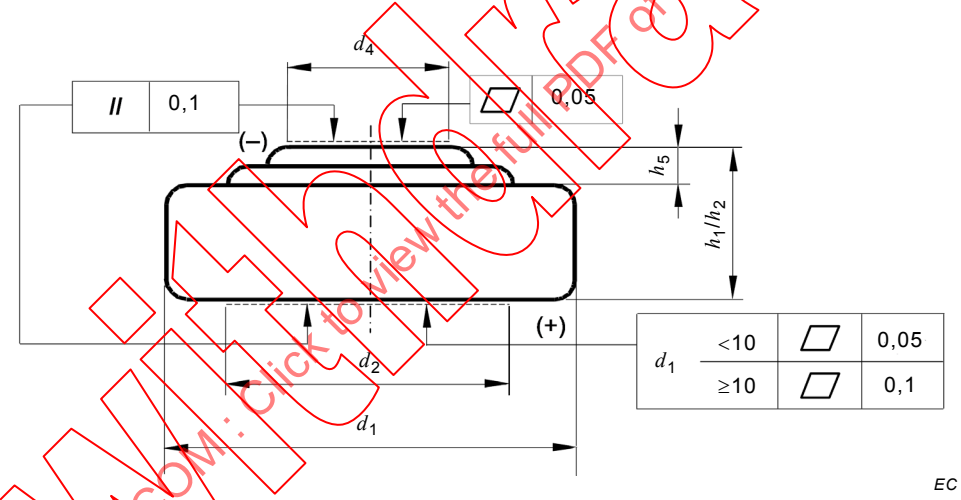

Key

h_1 maximum overall height of the battery

h_2 minimum distance between the flats of the positive and negative contacts

h_5 minimum projection of the flat negative contact

d_1 maximum and minimum diameter of the battery

d_2 minimum diameter of the flat positive contact

d_4 minimum diameter of the flat negative contact

NOTE This numbering follows the harmonization in the IEC 60086 series.

Figure 1 – Dimensional drawing

Withdrawn
IECNORM.COM : Click to view the full PDF of IEC 60086-3:2016 RLV

Table 1 – Dimensions and size codes

Dimensions in millimetres

Diameter			d_4	Height h_1/h_2														
				Code[a]														
Code[a]	d_1	Tole-rance		10	12	14	16	20	21	25	26	27	30	31	32	36	42	54
				Tolerance														
				0 −0,10	0 −0,15	0 −0,15	0 −0,18	0 −0,20	0 −0,20	0 −0,20	0 −0,20	0 −0,20	0 −0,25	0 −0,25	0 −0,25	0 −0,25	0 −0,25	0 −0,25
4	4,8	0 −0,15					1,65		2,15									
5	5,8	0 −0,15	2,6	1,05	1,25	1,45	1,65		2,15			2,70						
6	6,8	0 −0,15	3,0	1,05	1,25	1,45	1,65		2,15		2,60							
7	7,9	0 −0,15	3,5	1,05	1,25	1,45	1,65		2,10		2,60			3,10		3,60		5,40
9	9,5	0 −0,15	4,5	1,05	1,25	1,45	1,65	2,05	2,10			2,70				3,60		
10	10,0	0 −0,30	3,0							2,50								
11	11,6	0 −0,20	6,0	1,05	1,25	1,45	1,65	2,05	2,10		2,60		3,05			3,60	4,20	5,40
12	12,5	0 −0,25	4,0		1,20		1,60	2,00		2,50								

NOTE Open boxes in the above matrix are not necessarily available for standardisation due to the concept of overlapping tolerances.

[a] See Annex A.

IECNORM.COM : Click to view the full PDF of IEC 60086-3:2016 RLV
Withdrawn

Table 2 – Dimensions and size codes

Dimensions in millimetres

Diameter			d_4	Height h_1/h_2					
				Code[a]					
				12	16	20	25	30	32
				Tolerances					
Code[a]	d_1	Tolerance		0 −0,20 ~~b~~	0 −0,20 ~~b~~	0 −0,25 ~~b~~	0 −0,30 ~~b~~	0 −0,30 ~~b~~	0 −0,30 ~~b~~
16	16	0 −0,25	5,00	1,20	1,60	2,00	2,50		3,20
20	20	0 −0,25	8,00	1,20	1,60	2,00	2,50		3,20
23	23	0 −0,30	8,00	1,20	1,60	2,00	2,50	3,00	
24	24,5	0 −0,30	8,00	1,20	1,60			3,00	

NOTE Open boxes in the above matrix are not necessarily available for standardisation due to the concept of overlapping tolerances.

[a] See Annex A.

~~b To be reduced in the future.~~

4.2 Terminals

Negative contact (–): the negative contact (dimension d_4) shall be in accordance with Tables 1 and 2. This is not applied to those batteries with a two-step negative contact.

Positive contact (+): the cylindrical surface is connected to the positive terminal. Positive contact should be made to the side of the battery but may be made to the base.

4.3 Projection of the negative terminal (h_5)

The dimension h_5 shall be as follows:

$h_5 \geq 0{,}02$ for $h_1/h_2 \leq 1{,}65$

$h_5 \geq 0{,}06$ for $1{,}65 < h_1/h_2 < 2{,}5$

$h_5 \geq 0{,}08$ for $h_1/h_2 \geq 2{,}5$

~~NOTE~~ The negative contact should be the highest point of the battery.

4.4 Shape of negative terminal

The space requirements shall be contained within an angle of 45° (see Figure 2).

The minimum values of l_1, for different heights of h_1/h_2, are given in Table 3.

IECNORM.COM : Click to view the full PDF of IEC 60086-3:2016 RLV
Withdrawn

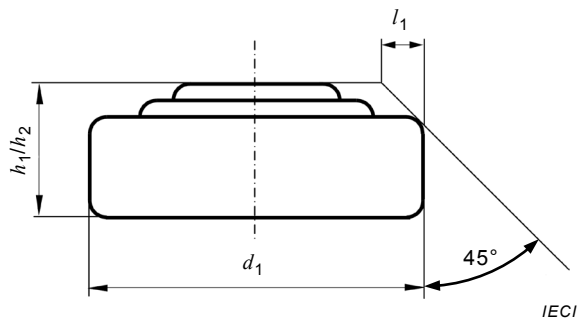

Figure 2 – Shape of negative terminal

Table 3 – Minimum values of l_1

Dimensions in millimetres

h_1/h_2	$l_{1\,min}$
$1 < h_1/h_2 \leq 1{,}90$	0,20
$1{,}90 < h_1/h_2 \leq 3{,}10$	0,35
$3{,}60 \leq h_1/h_2 \leq 4{,}20$	0,70
$5{,}40 \leq h_1/h_2$	0,90

4.5 Mechanical resistance to pressure

A force F (N), as specified in Table 4, applied for 10 s through a steel ball of 1 mm diameter, at the centre of each contact area, shall not cause any deformation prejudicial to the proper functioning of the battery, i.e. after this test, the battery shall pass the tests specified in Clause 7.

Table 4 – Applied force F by battery dimensions

Battery dimensions		Force
d_1 mm	h_1/h_2 mm	F N
<7,9	<3,0	5
	≥3,0	10
≥7,9	<3,0	10
	≥3,0	10

4.6 Deformation

The dimensions of batteries shall conform with the relevant specified dimensions at all times including discharge to the defined end-point voltage.

NOTE 1 A battery height increase up to 0,25 mm can occur ~~in B, C, L and S systems~~, if discharged below this voltage.

NOTE 2 A battery height decrease can occur in B and C systems as discharge continues.

4.7 Leakage

Undischarged batteries and, if required, batteries tested according to 7.2.6 shall be examined as stated in 7.3. The acceptable number of defects shall be agreed between the manufacturer and the purchaser.

Withdrawn
IECNORM.COM : Click to view the full PDF of IEC 60086-3:2016 RLV

4.8 Marking

4.8.1 General

The designation and the polarity shall be marked on the battery. Battery marking should not impede electrical contact. All other markings may be given on the packing instead of on the battery:

a) designation according to normative Annex A, or common;

b) expiration of a recommended usage period or year and month or week of manufacture;

The year and month or week of manufacture may be in code. The code is composed by the last digit of the year and by a number indicating the month. October, November and December should be represented by the letters O, Y and Z respectively.

EXAMPLE

41: January 2014;

4Y: November 2014.

c) polarity of the positive (+) terminal;

d) nominal voltage;

e) name or trade mark of the supplier;

f) cautionary advice;

g) caution for ingestion of ~~swallowable~~ batteries shall be given. Refer to IEC 60086-4:~~2007~~ 2014 (7.2 a) and 9.2) and IEC 60086-5:-[3] (7.1 l) and 9.2) for details.

~~NOTE 1 Battery marking should not impede electrical contact.~~

NOTE ~~2~~ Examples of the common designations can be found in Annex D of IEC 60086-2:2015.

4.8.2 Disposal

Marking of batteries with respect to the method of disposal shall be in accordance with local legal requirements.

5 Electrical requirements

5.1 Electrochemical system, nominal voltage, end-point voltage and open-circuit voltage

The requirements concerning the electrochemical system, the nominal voltage, the end-point voltage and the open-circuit voltage are given in Table 5.

Table 5 – Standardised electrochemical systems

Letter	Negative electrode	Electrolyte	Positive electrode	Nominal voltage (V_n) V	End-point voltage (EV) V	Open-circuit voltage (U_{OC} or OCV) V	
						Max.	Min.
B	Lithium (Li)	Organic electrolyte	Carbon monofluoride $(CF)_x$	3,0	2,0	3,70	3,00
C	Lithium (Li)	Organic electrolyte	Manganese dioxide (MnO_2)	3,0	2,0	3,70	3,00
L	Zinc (Zn)	Alkali metal hydroxide	Manganese dioxide (MnO_2)	1,5	1,0	1,68	1,50
S	Zinc (Zn)	Alkali metal hydroxide	Silver oxide (Ag_2O)	1,55	1,2	1,63	1,57

IECNORM.COM : Click to view the full PDF of IEC 60086-3:2016 RLV
Withdrawn

5.2 Closed circuit voltage U_{cc} (CCV), internal resistance and impedance

Closed circuit voltage and internal resistance shall be measured according to 7.2.

AC impedance should be measured with an LCR meter.

Limit values shall be agreed between the manufacturer and the purchaser.

5.3 Capacity

The capacity shall be agreed between the manufacturer and the purchaser on the basis of a continuous discharge test lasting approximately 30 days, according to 7.2.6.

5.4 Capacity retention

The capacity retention is the ratio between the capacities under the given discharge conditions measured on fresh batteries and a sample of the same lot stored during 365 days at (20 ± 2) °C and a relative humidity between ~~45 % and 75 %~~ 55 ± 20 %.

The ratio of capacity retention shall be agreed between the manufacturer and the purchaser. The minimum value should be at least 90 % for a period of 12 months. The capacity measurement is carried out according to 7.2.6.

For the purpose of verifying compliance with this standard, conditional acceptance may be given after completion of the initial capacity tests.

6 Sampling and quality assurance

~~6.1 General~~

The use of sampling plans or product quality indices ~~may~~ should be agreed between manufacturer and purchaser.

Where no agreement is specified~~, the options in 6.2 and/or 6.3 are recommended~~, refer to ISO 2859 and ISO 21747 for sampling and quality compliance assessment advice.

~~6.2 Sampling~~

~~6.2.1 Testing by attributes~~

~~When testing by attributes is required, the sampling plan chosen shall be in accordance with the specifications of IEC 60410 and/or ISO 2859. The individual parameters to be tested and the acceptance quality level (AQL) values shall be defined (a minimum of three batteries of the same type shall be tested).~~

~~6.2.2 Testing by variables~~

~~When testing by variables is required, the sampling plan chosen shall be in accordance with ISO 3951. The individual parameters to be tested, the sample and the acceptance quality level (AQL) shall be defined.~~

~~6.3 Product quality indices~~

~~Consideration may be given to utilising one of the indices shown in IEC 60086-1.~~

IECNORM.COM : Click to view the full PDF of IEC 60086-3:2016 RLV
Withdrawn

7 Test methods

7.1 Shape and dimensions

7.1.1 Shape requirement

The shape of the negative contact is checked preferably by optical projection or by an open gauge according to Figure 3.

The measurement method shall be agreed between the manufacturer and the purchaser.

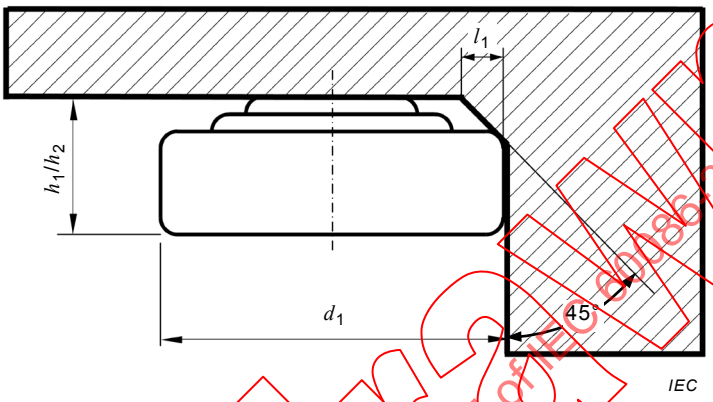

Figure 3 – Shape requirement

7.2 Electrical characteristics

7.2.1 Environmental conditions

Unless otherwise specified, the sample batteries shall be tested at a temperature of (20 ± 2) °C and a relative humidity between ~~45 % and 75 %~~ 55 + 20 / – 40 %.

During use, batteries may be exposed to low temperatures; it is therefore recommended to carry out complementary tests at (0 ± 2) °C and at (–10 ± 2) °C.

7.2.2 Equivalent circuit – effective internal resistance – DC method

Resistance of any electrical component determined by calculating the ratio between the voltage drop ΔU across this component and the range of current Δi passing through this component and causing the voltage drop $R = \Delta U / \Delta i$.

NOTE As an analogy, the internal d.c. resistance R_i of any electrochemical cell is defined by the following relation:

$$R_i\,(\Omega) = \frac{\Delta U\,(\mathrm{V})}{\Delta i\,(\mathrm{A})} \qquad (1)$$

The internal d.c. resistance is illustrated by the schematic voltage transient as given below in Figure 4.

IECNORM.COM : Click to view the full PDF of IEC 60086-3:2016 RLV
Withdrawn

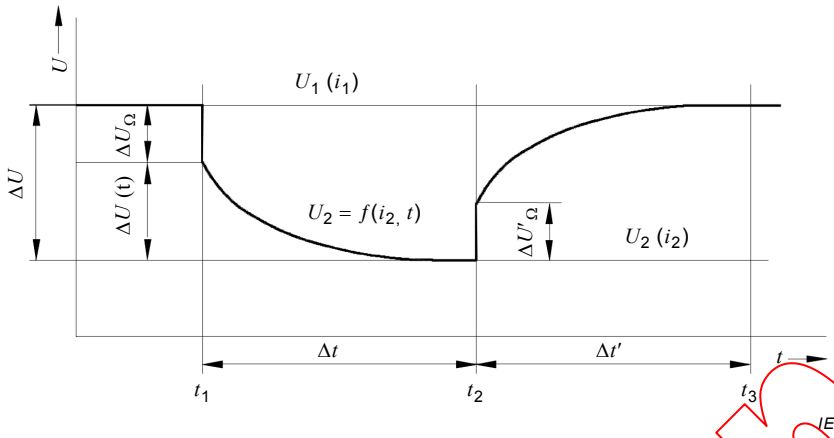

Figure 4 – Schematic voltage transient

As can be seen from the diagram in Figure 4, the voltage drop ΔU of the two components differs in nature, as shown in the following relation:

$$\Delta U = \Delta U_{\Omega} + \Delta U\ (t) \tag{2}$$

The first component ΔU_{Ω} for ($t = t_1$) is independent of time (ohmic drop), and results from the increase in current Δi according to the relation:

$$\Delta U_{\Omega} = \Delta i \times R_{\Omega} \tag{3}$$

In this relation, R_{Ω} is a pure ohmic resistance. The second component $\Delta U\ (t)$ is time dependent and is of electrochemical origin (capacitive reactance).

7.2.3 Equipment

The equipment used for the voltage measurements shall have the following specifications:

– accuracy: ≤0,25 %;

– precision: ≤50 % of last digit;

– internal resistance: ≥1 MΩ;

– measurement time: in the tests proposed in the following subclauses, it is important to make sure that the measurement is taken during the flat period of the voltage transient (see Figure 5). Otherwise, a measurement error due to the capacitive reactance may occur (lower internal resistance).

The time $\Delta t'$ necessary for the measurement shall be brief in comparison to Δt, and the measurement equipment compatible with these criteria.

Withdrawn
IECNORM.COM : Click to view the full PDF of IEC 60086-3:2016 RLV

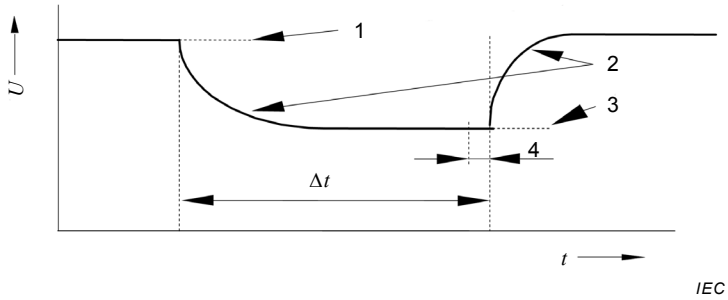

Key

1 open-circuit voltage U_{oc} (OCV)

2 effect of capacitive reactance

3 closed circuit voltage U_{cc} (CCV)

4 $\Delta t'$ (measurement U_{cc})

Figure 5 – Curve: $U = f(t)$

7.2.4 Measurement of open-circuit voltage U_{oc} (OCV) and closed circuit voltage U_{cc} (CCV)

Refer to Figure 6:

First measurement U_{oc}: The switch is left open while this measurement is being carried out.

Next measurement U_{cc}: The battery being tested shall be connected to the load R_m. The switch shall be left closed during the duration Δt according to Table 6.

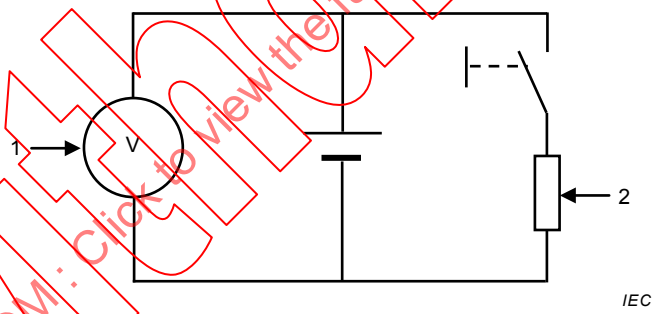

Key

1 reading U_{cc} / U_{oc}

2 R_m resistance of measurement

Figure 6 – Circuitry principle

IECNORM.COM : Click to view the full PDF of IEC 60086-3:2016 RLV
Withdrawn

Table 6 – Test method for U_{cc} (CCV) measurement

Test method	Battery with KOH electrolyte [a]		All other batteries	
	R_m Ω	Δt s	R_m Ω	Δt ms
A [b]	150 ± 0,5 %	1 ± 5 %	1 500 ± 0,5 %	10 ± 5 %
B [c]	150 ± 0,5 %	0,5 – 2	470 ± 0,5 %	500 – 2 000
C [d]	200 ± 0,5 %	5 ± 5 %	2 000 ± 0,5 %	7,8 ± 5 %

~~NOTE~~ R_m should take into consideration the resistance of the connection lines of the battery being tested and the contact resistance of the switch.

[a] Application with high peak current.

[b] Method A (recommended test): requires specialised test equipment.

[c] Method B: to be used in the absence of method A test equipment.

[d] Method C: to be used only by agreement between the manufacturer and the purchaser.

7.2.5 Calculation of the internal resistance R_i

The internal resistance may be determined by the following calculation:

$$R_i = \frac{U_{oc} - U_{cc}}{U_{cc} / R_m}$$

NOTE The relation U_{cc} / R_m corresponds to the current delivered through the discharge resistance R_m (see 7.2.4).

7.2.6 Measurement of the capacity

7.2.6.1 General

There are two methods for measuring capacity:

– the recommended method is method A, which is more indicative of watch requirements;

– method B is a more general method and is already specified in IEC 60086-1 and IEC 60086-2.

When presenting capacity data, the manufacturer shall specify which test method was used.

7.2.6.2 Method A

a) Circuitry principle (see Figure 7)

IECNORM.COM : Click to view the full PDF of IEC 60086-3:2016 RLV
Withdrawn

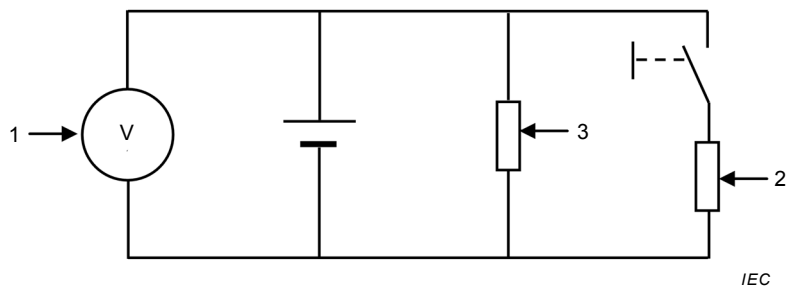

Key

1 reading U_{cc} / U'_{oc}

2 R_m resistance of measurement

3 R_d resistance of continuous discharge

Figure 7 – Circuitry principle for method A

b) Procedure

The duration of the discharge test at the resistor R_d approximates to 30 days.

Value of the resistance R_d: the value of the resistive load (specified in Tables 7 and 8) shall include all parts of the external circuit and shall be accurate to within ±0,5 %.

c) Determination of the capacity

The measurements of the open-circuit voltage U'_{oc} and that of the closed circuit voltage U_{cc} are carried out at least once a day on the battery permanently connected to R_d, until the first passage of the U_{cc} under the end-point voltage defined in Table 5 is obtained.

1) First measurement U'_{oc}: the resistance R_d being much higher than R_m, U'_{oc} approximates to U_{oc}.

The switch is left open while the measurement is being carried out.

2) Next measurement U_{cc}: the battery being tested is connected to R_m. The switch is left closed during the duration Δt according to Table 7.

Table 7 – Test method A for U_{cc} (CCV) measurement

Batteries with KOH electrolyte		All other batteries	
R_m Ω	Δt s	R_m Ω	Δt ms
150 ± 0,5 %	1 ± 5 %	1 500 ± 0,5 %	10 ± 5 %

~~NOTE 1 The value of resistive loads (which includes all parts of the external circuit) should be as specified in Table 7 and Table 8.~~

3) Calculation of the capacity C: the capacity of the battery is obtained by adding the partial capacity amounts C_p, calculated after each measurement with the following formula:

$$C_p = \frac{U'_{oc} \times t_i}{R_d}$$

where t_i is the time between two measurements

$$C = \Sigma\, C_p$$

~~NOTE 2~~ 4) ~~At~~ Near the end of discharge, it is recommended to carry out several measurements a day in order to obtain sufficient accuracy.

IECNORM.COM : Click to view the full PDF of IEC 60086-3:2016 RLV
Withdrawn

7.2.6.3 Method B

a) Circuitry principle (see Figure 8)

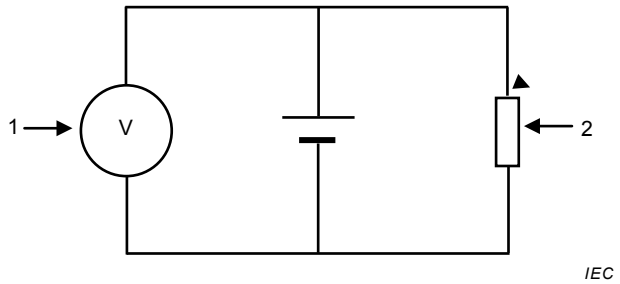

Key

1 reading U_{cc}

2 R_d resistance of continuous discharge

Figure 8 – Circuitry principle for method B

b) See procedure in 7.2.6.2 b).

c) Determination of the capacity: when the on-load voltage of the battery under test drops for the first time below the specified end point as specified in Table 5, the time *t* is calculated and defined as service life.

The capacity is calculated by the following formula:

$$C = \frac{U_{cc}\,(\text{average})}{R_d}\,t$$

where

C is the capacity;

U_{cc}(average) is the average voltage value of U_{cc} during discharge duration time (0-t);

t is the service life.

7.2.7 Calculation of the internal resistance R_i during discharge in case of method A (optional)

After each measurement of U'_{oc} and U_{cc} is carried out according to the procedure described in 7.2.6, it is possible to calculate the internal resistance R_i of the battery using the following formula:

$$R_i = \frac{U'_{oc} - U_{cc}}{U_{cc} / R_m}$$

Withdrawn
IECNORM.COM : Click to view the full PDF of IEC 60086-3:2016 RLV

Table 8 – Discharge resistance (values)

Code number according to the dimensions	Letter for electrochemical systems		Code number according to the dimensions	Letter for electrochemical systems	
	L	S		C	B
	Discharge resistance			Discharge resistance	
	kΩ			kΩ	
416			~~1212~~ 1025	68	
421			~~1216~~ 1212		
510			~~1220~~ 1216	62	
512			~~1225~~ 1220	62	
514			~~1612~~ 1225		30
516		~~150~~ 82	~~1616~~ 1612		
521		~~100~~ 68	~~1620~~ 1616	~~47~~ 30	
527		~~68~~ 56	~~1625~~ 1620	47	
610			~~1632~~ 1625		
612			~~2012~~ 1632		
614		120	~~2016~~ 2012	30	
616		100	~~2020~~ 2016	30	30
621		68	~~2025~~ 2020	~~15~~ 30	
626		47	~~2032~~ 2025	15	
710			~~2312~~ 2032	15	
712		100	~~2316~~ 2312		
714		68	~~2320~~ 2316	~~15~~	
716		68	~~2325~~ 2320	15	15
721		47	~~2412~~ 2325		15
726		33	~~2416~~ 2412		
731		27	~~2430~~ 2416		
736	22	22	2330	15	
754		15	2430	15	
910					
912					
914					
916		47			
920		33			
921		33			
927		22			
936		15			
1110					
1112					
1114					
1116		39			
1120		22			
1121	22	22			
1126		15			
1130	15	15			
1136		15			
1142	22	10			
1154	6,8	6,8			
NOTE Blank values under consideration.					

IECNORM.COM : Click to view the full PDF of IEC 60086-3:2016 RLV
Withdrawn

7.3 Test methods for determining the resistance to leakage

7.3.1 Preconditioning and ~~previous~~ initial visual examination

Before carrying out the tests specified in 7.3.2 and 7.3.3, the batteries shall be submitted to a visual examination according to the requirements stated in Clause 8.

For tests in 7.3.2.1 and 7.3.2.2, batteries shall be ~~preconditioned~~ pre-stored at the specified temperature (40 °C and 45 °C respectively) for 2 h ~~to avoid condensation at elevated humidity~~. Batteries shall be moved from the preconditioning (alternative pre-stored) chamber (or oven) into the high temperature and humidity test chamber within minutes in order to avoid cooling of the battery and the risk of condensation at elevated humidity.

7.3.2 High temperature and humidity test

7.3.2.1 Recommended test

The battery shall be stored under the conditions specified in Table 9.

Table 9 – Storage conditions for the recommended test

Temperature °C	Relative humidity %	Test time days
40 ± 2	90 to 95	30 or 90
~~NOTE~~ The test time of 30 days may be used for an accelerated routine quality control test, whereas the test time of 90 days applies to qualification testing of new batteries.		

7.3.2.2 Optional test

After agreement between the manufacturer and purchaser, the following testing conditions may be chosen (see Table 10).

Table 10 – Storage conditions for optional test

Temperature °C	Relative humidity %	Test time days
45 ± 2	90 to 95	20 or 60
~~NOTE~~ The test time of 20 days may be used for an accelerated routine quality control test, whereas the test time of 60 days applies to qualification testing of new batteries.		

7.3.3 Test by temperature cycles

The battery shall be submitted to 150 temperature cycles according to the schedule in Figure 9:

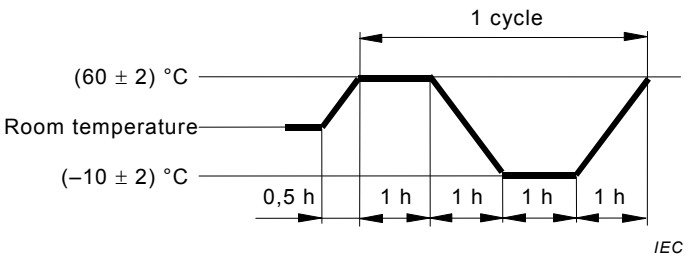

Figure 9 – Test by temperature cycles

IECNORM.COM : Click to view the full PDF of IEC 60086-3:2016 RLV

~~The relative humidity shall be 50 % to 60 % at room temperature; it will subsequently vary with the temperature variation.~~

8 Visual examination and acceptance conditions

8.1 Preconditioning

Before carrying out the ~~previous~~ initial visual examination or after the tests specified in Clause 7, the batteries shall be stored for at least 24 h at room temperature and at a relative humidity between ~~45 % and 70 %~~ 55 ± 20 %.

~~NOTE 1~~ The leakage should~~, as a rule,~~ be observed after crystallisation of the electrolyte. The time of the storage of 24 h can be prolonged if necessary.

~~NOTE 2~~ This examination may be applied to new or used batteries, or to batteries which have been submitted to different tests.

8.2 Magnification

The visual examination shall be carried out at a magnification of ~~x10 to~~ x15. ~~The magnification of x15 is necessary in order to detect small leaks.~~

8.3 Lighting

The visual examination shall be carried out under a diffuse white light of 900 lx to 1 100 lx at the surface of the battery to be inspected.

8.4 Leakage levels and classification

~~The leakage levels and classification are given in Table 11.~~

The visual examination shall be carried out under a diffuse white light of 900 lx to 1 100 lx at the surface of the battery to be inspected. (See Table 11).

Withdrawn
IECNORM.COM : Click to view the full PDF of IEC 60086-3:2016 RLV

Table 11 – Leakage levels and classification *(1 of 2)*

Leakage levels		Diagram	Definition
Classification	**Grade**		
Salting	S1	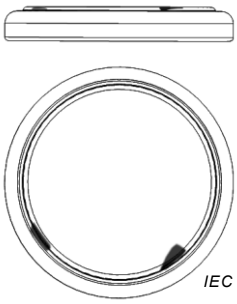	Little salting found near the gasket, affecting less than 10 % of the perimeter of the gasket, detected while observing at a magnification of x15. The leak is not detectable with the naked eye
	S2	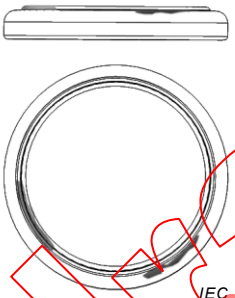	Traces of salting near gasket can be detected with the naked eye. At a magnification of x15, it may be noted that these salts affect more than 10 % of the perimeter of the gasket
	S3	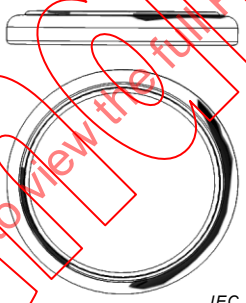	Salt spreads on both sides of the gasket can be detected with the naked eye, but do not reach the flat of the negative contact
Clouds	C1		Leaks spread in clouds on both sides of the gasket, do reach the flat of the negative contact but do not reach the central part of the flat negative contact
	C2	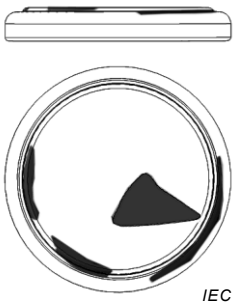	Leaks spread in clouds, which reach the central part of the flat negative contact

IECNORM.COM : Click to view the full PDF of IEC 60086-3:2016 RLV
Withdrawn

Table 11 *(2 of 2)*

Leakage levels		Diagram	Definition
Classification	**Grade**		
Leaks	L1	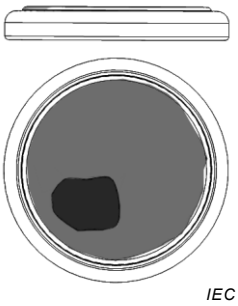	The accumulation of crystallised liquid coming from the electrolyte swells up on part of the cloud spread, which covers the entire surface of the flat negative contact
	L2	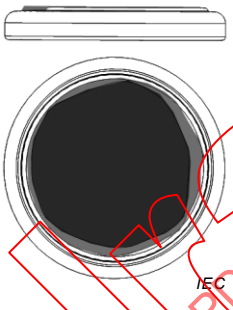	The accumulation of crystallised liquid coming from the electrolyte swells up on the entire cloud spread, which covers the entire surface of the flat negative contact

8.5 Acceptance conditions

The acceptable level, as well as the proportion of defective pieces, shall be agreed between the manufacturer and the purchaser.

Fresh batteries, with a level of leakage exceeding S1, shall not be submitted for qualification. The acceptance criteria may be less restrictive for batteries which have been tested according to 7.3.2. If necessary, photographic references may be established.

Withdrawn
IECNORM.COM : Click to view the full PDF of IEC 60086-3:2016 RLV

Annex A
(normative)

Designation

Watch batteries manufactured with the express purpose of complying with this standard should be designated by a system of coded letters and numbers as shown below. However, the letter W is used to indicate compliance with IEC 60086-3.

EXAMPLE: S R 7 21 S W

Electrochemical system letter according to Table 5

Round cell: (according to IEC 60086-1)

Dimension: diameter in millimetres

Dimension: height in tenths of millimetres

Electrolyte:

– S: Sodium hydroxide NaOH (optional)
– P: Potassium hydroxide KOH (optional)
  Letter P may be left out in the case of electrochemical system letter S.
– Organic electrolyte: null

Letter W: compliance with IEC 60086-3.

Withdrawn
IECNORM.COM : Click to view the full PDF of IEC 60086-3:2016 RLV

Bibliography

IEC 60068-2-78:2001, *Environmental testing – Part 2-78: Tests – Test Cab: Damp heat, steady state*

ISO 8601:2004, *Data elements and interchange formats – Information interchange – Representation of dates and times*

ISO 2859, *Sampling procedures for inspection by attributes package*

ISO 21747, *Statistical methods – Process performance and capability statistics for measured quality characteristics*

Withdrawn
IECNORM.COM : Click to view the full PDF of IEC 60086-3:2016 RLV

IEC 60086-3

Edition 4.0 2016-05

INTERNATIONAL STANDARD

NORME INTERNATIONALE

Primary batteries – Part 3: Watch batteries

Piles électriques – Partie 3: Piles pour montres

Withdrawn
IECNORM.COM : Click to view the full PDF of IEC 60086-3:2016 RLV

IEC 60086-3:2016-05(en-fr)

CONTENTS

FOREWORD 4
INTRODUCTION 6
1 Scope 7
2 Normative references 7
3 Terms and definitions 7
4 Physical requirements 8
4.1 Battery dimensions, symbols and size codes 8
4.2 Terminals 10
4.3 Projection of the negative terminal (h_5) 10
4.4 Shape of negative terminal 10
4.5 Mechanical resistance to pressure 11
4.6 Deformation 11
4.7 Leakage 11
4.8 Marking 12
4.8.1 General 12
4.8.2 Disposal 12
5 Electrical requirements 12
5.1 Electrochemical system, nominal voltage, end-point voltage and open-circuit voltage 12
5.2 Closed circuit voltage U_{CC} (CCV), internal resistance and impedance 13
5.3 Capacity 13
5.4 Capacity retention 13
6 Sampling and quality assurance 13
7 Test methods 13
7.1 Shape and dimensions 13
7.1.1 Shape requirement 13
7.2 Electrical characteristics 14
7.2.1 Environmental conditions 14
7.2.2 Equivalent circuit – effective internal resistance – DC method 14
7.2.3 Equipment 15
7.2.4 Measurement of open-circuit voltage U_{OC} (OCV) and closed circuit voltage U_{CC} (CCV) 15
7.2.5 Calculation of the internal resistance R_i 16
7.2.6 Measurement of the capacity 16
7.2.7 Calculation of the internal resistance R_i during discharge in case of method A (optional) 18
7.3 Test methods for determining the resistance to leakage 20
7.3.1 Preconditioning and initial visual examination 20
7.3.2 High temperature and humidity test 20
7.3.3 Test by temperature cycles 20
8 Visual examination and acceptance conditions 21
8.1 Preconditioning 21
8.2 Magnification 21
8.3 Lighting 21
8.4 Leakage levels and classification 21
8.5 Acceptance conditions 23

IECNORM.COM : Click to view the full PDF of IEC 60086-3:2016 RLV
Withdrawn

Annex A (normative) Designation 24
Bibliography 25

Figure 1 – Dimensional drawing 8
Figure 2 – Shape of negative terminal 11
Figure 3 – Shape requirement 14
Figure 4 – Schematic voltage transient 14
Figure 5 – Curve: $U = f(t)$ 15
Figure 6 – Circuitry principle 16
Figure 7 – Circuitry principle for method A 17
Figure 8 – Circuitry principle for method B 18
Figure 9 – Test by temperature cycles 20

Table 1 – Dimensions and size codes 9
Table 2 – Dimensions and size codes 10
Table 3 – Minimum values of l_1 11
Table 4 – Applied force F by battery dimensions 11
Table 5 – Standardised electrochemical systems 12
Table 6 – Test method for U_{CC} (CCV) measurement 16
Table 7 – Test method A for U_{CC} (CCV) measurement 17
Table 8 – Discharge resistance (values) 19
Table 9 – Storage conditions for the recommended test 20
Table 10 – Storage conditions for optional test 20
Table 11 – Leakage levels and classification *(1 of 2)* 22

Withdrawn
IECNORM.COM : Click to view the full PDF of IEC 60086-3:2016 RLV

INTERNATIONAL ELECTROTECHNICAL COMMISSION

PRIMARY BATTERIES –

Part 3: Watch batteries

FOREWORD

1) The International Electrotechnical Commission (IEC) is a worldwide organization for standardization comprising all national electrotechnical committees (IEC National Committees). The object of IEC is to promote international co-operation on all questions concerning standardization in the electrical and electronic fields. To this end and in addition to other activities, IEC publishes International Standards, Technical Specifications, Technical Reports, Publicly Available Specifications (PAS) and Guides (hereafter referred to as "IEC Publication(s)"). Their preparation is entrusted to technical committees; any IEC National Committee interested in the subject dealt with may participate in this preparatory work. International, governmental and non-governmental organizations liaising with the IEC also participate in this preparation. IEC collaborates closely with the International Organization for Standardization (ISO) in accordance with conditions determined by agreement between the two organizations.

2) The formal decisions or agreements of IEC on technical matters express, as nearly as possible, an international consensus of opinion on the relevant subjects since each technical committee has representation from all interested IEC National Committees.

3) IEC Publications have the form of recommendations for international use and are accepted by IEC National Committees in that sense. While all reasonable efforts are made to ensure that the technical content of IEC Publications is accurate, IEC cannot be held responsible for the way in which they are used or for any misinterpretation by any end user.

4) In order to promote international uniformity, IEC National Committees undertake to apply IEC Publications transparently to the maximum extent possible in their national and regional publications. Any divergence between any IEC Publication and the corresponding national or regional publication shall be clearly indicated in the latter.

5) IEC itself does not provide any attestation of conformity. Independent certification bodies provide conformity assessment services and, in some areas, access to IEC marks of conformity. IEC is not responsible for any services carried out by independent certification bodies.

6) All users should ensure that they have the latest edition of this publication.

7) No liability shall attach to IEC or its directors, employees, servants or agents including individual experts and members of its technical committees and IEC National Committees for any personal injury, property damage or other damage of any nature whatsoever, whether direct or indirect, or for costs (including legal fees) and expenses arising out of the publication, use of, or reliance upon, this IEC Publication or any other IEC Publications.

8) Attention is drawn to the Normative references cited in this publication. Use of the referenced publications is indispensable for the correct application of this publication.

9) Attention is drawn to the possibility that some of the elements of this IEC Publication may be the subject of patent rights. IEC shall not be held responsible for identifying any or all such patent rights.

International Standard IEC 60086-3 has been prepared by IEC technical committee 35: Primary cells and batteries, and ISO technical committee 114: Horology.

This fourth edition cancels and replaces the third edition published in 2011. This edition constitutes a technical revision.

This edition includes the following significant technical changes with respect to the previous edition:

a) A harmonization of the cell sizes and service output tests with IEC 60086-2;

b) Clarifications of Clauses 6: Sampling and Quality Assurance, 7: Test methods, and 8: Visual examination and acceptance condition;

c) Harmonization of temperature and humidity conditions with IEC 60086-1.

IECNORM.COM : Click to view the full PDF of IEC 60086-3:2016
Withdrawn

This publication is published as a double logo standard.

The text of this standard is based on the following documents:

FDIS	Report on voting
35/1359/FDIS	35/1362/RVD

Full information on the voting for the approval of this standard can be found in the report on voting indicated in the above table.

This publication has been drafted in accordance with the ISO/IEC Directives, Part 2.

A list of all parts in the IEC 60086 series, published under the general title *Primary batteries*, can be found on the IEC website.

The committee has decided that the contents of this publication will remain unchanged until the stability date indicated on the IEC website under "http://webstore.iec.ch" in the data related to the specific publication. At this date, the publication will be

- reconfirmed,
- withdrawn,
- replaced by a revised edition, or
- amended.

Withdrawn
IECNORM.COM : Click to view the full PDF of IEC 60086-3:2016RLV

INTRODUCTION

This part of IEC 60086 provides specific requirements and information for primary watch batteries. This part of IEC 60086 was prepared through joint work between the IEC and ISO to benefit primary battery users, watch designers and battery manufacturers by ensuring the best compatibility between batteries and watches.

This part of IEC 60086 will remain under continual scrutiny to ensure that the publication is kept up to date with the advances in both battery and watch technologies.

NOTE Safety information is available in IEC 60086-4 and IEC 60086-5.

Withdrawn
IECNORM.COM : Click to view the full PDF of IEC 60086-3:2016 RLV

PRIMARY BATTERIES –

Part 3: Watch batteries

1 Scope

This part of IEC 60086 specifies dimensions, designation, methods of tests and requirements for primary batteries for watches. In several cases, a menu of test methods is given. When presenting battery electrical characteristics and/or performance data, the manufacturer specifies which test method was used.

2 Normative references

The following documents, in whole or in part, are normatively referenced in this document and are indispensable for its application. For dated references, only the edition cited applies. For undated references, the latest edition of the referenced document (including any amendments) applies.

IEC 60086-1:2015, *Primary batteries – Part 1: General*

IEC 60086-2:2015, *Primary batteries – Part 2: Physical and electrical specifications*

IEC 60086-4:2014, *Primary batteries – Part 4: Safety of lithium batteries*

IEC 60086-5:-[1], *Primary batteries – Part 5: Safety of batteries with aqueous electrolyte*

3 Terms and definitions

For the purposes of this document, the terms and definitions given in IEC 60086-1 as well as the following terms and definitions apply.

3.1
capacitive reactance
part of the internal resistance, that leads to a voltage drop during the first seconds under load

3.2
capacity
electric charge (quantity of electricity) which a cell or battery can deliver under specified discharge conditions

Note 1 to entry: The SI unit for electric charge is the coulomb (1 C = 1 As) but, in practice, capacity is usually expressed in ampere hours (Ah).

3.3
fresh battery
undischarged battery 60 days maximum after date of manufacture

[1] To be published.

Withdrawn
IECNORM.COM : Click to view the full PDF of IEC 60086-3:2016 RLV

3.4
ohmic drop
part of the internal resistance that leads to a voltage drop immediately after switching the load on

4 Physical requirements

4.1 Battery dimensions, symbols and size codes

Dimensions and tolerances of batteries for watches shall be in accordance with Figure 1, Table 1 and Table 2. The dimensions of the batteries shall be tested in accordance with 7.1.

The symbols used to denote the various dimensions in Figure 1 are in accordance with IEC 60086-2:2015, Clause 4.

Dimensions in millimetres

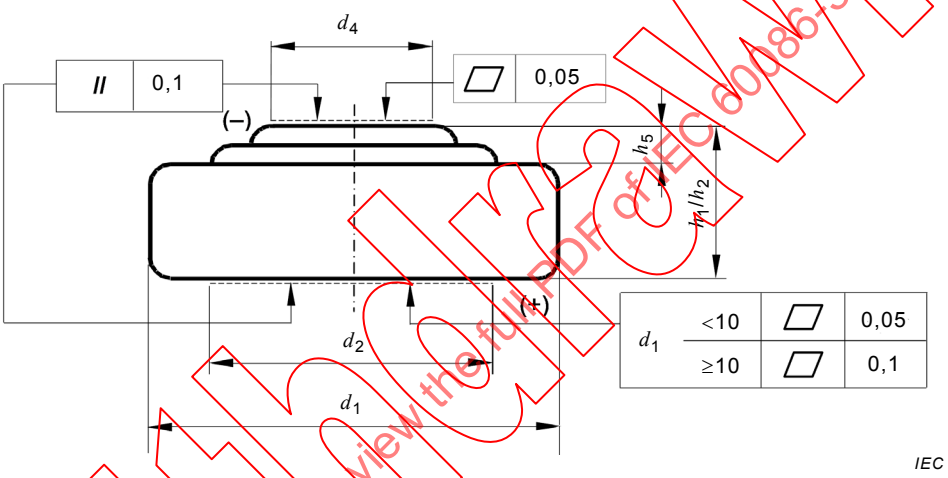

Key

h_1 maximum overall height of the battery

h_2 minimum distance between the flats of the positive and negative contacts

h_5 minimum projection of the flat negative contact

d_1 maximum and minimum diameter of the battery

d_2 minimum diameter of the flat positive contact

d_4 minimum diameter of the flat negative contact

NOTE This numbering follows the harmonization in the IEC 60086 series.

Figure 1 – Dimensional drawing

IECNORM.COM : Click to view the full PDF of IEC 60086-3:2016 RLV
Withdrawn

Table 1 – Dimensions and size codes

Dimensions in millimetres

Diameter			d_4	Height h_1/h_2														
				Code[a]														
Code[a]	d_1	Tole-rance		10	12	14	16	20	21	25	26	27	30	31	32	36	42	54
				Tolerance														
				0 −0,10	0 −0,15	0 −0,15	0 −0,18	0 −0,20	0 −0,20	0 −0,20	0 −0,20	0 −0,20	0 −0,25	0 −0,25	0 −0,25	0 −0,25	0 −0,25	0 −0,25
4	4,8	0 −0,15					1,65		2,15									
5	5,8	0 −0,15	2,6	1,05	1,25	1,45	1,65		2,15			2,70						
6	6,8	0 −0,15	3,0	1,05	1,25	1,45	1,65		2,15		2,60							
7	7,9	0 −0,15	3,5	1,05	1,25	1,45	1,65		2,10		2,60			3,10		3,60		5,40
9	9,5	0 −0,15	4,5	1,05	1,25	1,45	1,65	2,05	2,10			2,70				3,60		
10	10,0	0 −0,30	3,0							2,50								
11	11,6	0 −0,20	6,0	1,05	1,25	1,45	1,65	2,05	2,10		2,60		3,05			3,60	4,20	5,40
12	12,5	0 −0,25	4,0		1,20		1,60	2,00		2,50								

NOTE Open boxes in the above matrix are not necessarily available for standardisation due to the concept of overlapping tolerances.

[a] See Annex A.

IECNORM.COM : Click to view the full PDF of IEC 60086-3:2016 RLV
Withdrawn

Table 2 – Dimensions and size codes

Dimensions in millimetres

Diameter			d_4	Height h_1/h_2					
				Code[a]					
Code[a]	d_1	Tolerance		12	16	20	25	30	32
				Tolerances					
				0 –0,20	0 –0,20	0 –0,25	0 –0,30	0 –0,30	0 –0,30
16	16	0 –0,25	5,00	1,20	1,60	2,00	2,50		3,20
20	20	0 –0,25	8,00	1,20	1,60	2,00	2,50		3,20
23	23	0 –0,30	8,00	1,20	1,60	2,00	2,50	3,00	
24	24,5	0 –0,30	8,00	1,20	1,60			3,00	

NOTE Open boxes in the above matrix are not necessarily available for standardisation due to the concept of overlapping tolerances.

[a] See Annex A.

4.2 Terminals

Negative contact (–): the negative contact (dimension d_4) shall be in accordance with Tables 1 and 2. This is not applied to those batteries with a two-step negative contact.

Positive contact (+): the cylindrical surface is connected to the positive terminal. Positive contact should be made to the side of the battery but may be made to the base.

4.3 Projection of the negative terminal (h_5)

The dimension h_5 shall be as follows:

$h_5 \geq 0{,}02$ for $h_1/h_2 \leq 1{,}65$

$h_5 \geq 0{,}06$ for $1{,}65 < h_1/h_2 < 2{,}5$

$h_5 \geq 0{,}08$ for $h_1/h_2 \geq 2{,}5$

The negative contact should be the highest point of the battery.

4.4 Shape of negative terminal

The space requirements shall be contained within an angle of 45° (see Figure 2).

The minimum values of l_1, for different heights of h_1/h_2, are given in Table 3.

IECNORM.COM : Click to view the full PDF of IEC 60086-3:2016 RLV
Withdrawn

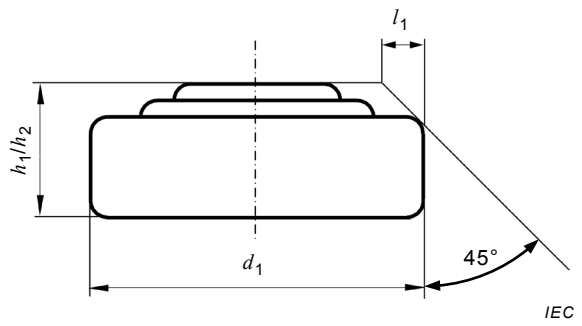

Figure 2 – Shape of negative terminal

Table 3 – Minimum values of l_1

Dimensions in millimetres

h_1/h_2	$l_{1\,min}$
$1 < h_1/h_2 \leq 1{,}90$	0,20
$1{,}90 < h_1/h_2 \leq 3{,}10$	0,35
$3{,}60 \leq h_1/h_2 \leq 4{,}20$	0,70
$5{,}40 \leq h_1/h_2$	0,90

4.5 Mechanical resistance to pressure

A force F (N), as specified in Table 4, applied for 10 s through a steel ball of 1 mm diameter, at the centre of each contact area, shall not cause any deformation prejudicial to the proper functioning of the battery, i.e. after this test, the battery shall pass the tests specified in Clause 7.

Table 4 – Applied force F by battery dimensions

Battery dimensions		Force
d_1 mm	h_1/h_2 mm	F N
<7,9	<3,0	5
	≥3,0	10
≥7,9	<3,0	10
	≥3,0	10

4.6 Deformation

The dimensions of batteries shall conform with the relevant specified dimensions at all times including discharge to the defined end-point voltage.

NOTE 1 A battery height increase up to 0,25 mm can occur, if discharged below this voltage.

NOTE 2 A battery height decrease can occur in B and C systems as discharge continues.

4.7 Leakage

Undischarged batteries and, if required, batteries tested according to 7.2.6 shall be examined as stated in 7.3. The acceptable number of defects shall be agreed between the manufacturer and the purchaser.

Withdrawn
IECNORM.COM : Click to view the full PDF of IEC 60086-3:2016 RLV

4.8 Marking

4.8.1 General

The designation and the polarity shall be marked on the battery. Battery marking should not impede electrical contact. All other markings may be given on the packing instead of on the battery:

a) designation according to normative Annex A, or common;

b) expiration of a recommended usage period or year and month or week of manufacture;

The year and month or week of manufacture may be in code. The code is composed by the last digit of the year and by a number indicating the month. October, November and December should be represented by the letters O, Y and Z respectively.

EXAMPLE

41: January 2014;

4Y: November 2014.

c) polarity of the positive (+) terminal;

d) nominal voltage;

e) name or trade mark of the supplier;

f) cautionary advice;

g) caution for ingestion of batteries shall be given. Refer to IEC 60086-4:2014 (7.2 a) and 9.2) and IEC 60086-5:-[1] (7.1 l) and 9.2) for details.

NOTE Examples of the common designations can be found in Annex D of IEC 60086-2:2015.

4.8.2 Disposal

Marking of batteries with respect to the method of disposal shall be in accordance with local legal requirements.

5 Electrical requirements

5.1 Electrochemical system, nominal voltage, end-point voltage and open-circuit voltage

The requirements concerning the electrochemical system, the nominal voltage, the end-point voltage and the open-circuit voltage are given in Table 5.

Table 5 – Standardised electrochemical systems

Letter	Negative electrode	Electrolyte	Positive electrode	Nominal voltage (V_n) V	End-point voltage (EV) V	Open-circuit voltage (U_{OC} or OCV) V	
						Max.	Min.
B	Lithium (Li)	Organic electrolyte	Carbon monofluoride $(CF)_x$	3,0	2,0	3,70	3,00
C	Lithium (Li)	Organic electrolyte	Manganese dioxide (MnO_2)	3,0	2,0	3,70	3,00
L	Zinc (Zn)	Alkali metal hydroxide	Manganese dioxide (MnO_2)	1,5	1,0	1,68	1,50
S	Zinc (Zn)	Alkali metal hydroxide	Silver oxide (Ag_2O)	1,55	1,2	1,63	1,57

IECNORM.COM : Click to view the full PDF of IEC 60086-3:2016 RLV
Withdrawn

5.2 Closed circuit voltage U_{cc} (CCV), internal resistance and impedance

Closed circuit voltage and internal resistance shall be measured according to 7.2.

AC impedance should be measured with an LCR meter.

Limit values shall be agreed between the manufacturer and the purchaser.

5.3 Capacity

The capacity shall be agreed between the manufacturer and the purchaser on the basis of a continuous discharge test lasting approximately 30 days, according to 7.2.6.

5.4 Capacity retention

The capacity retention is the ratio between the capacities under the given discharge conditions measured on fresh batteries and a sample of the same lot stored during 365 days at (20 ± 2) °C and a relative humidity between 55 ± 20 %.

The ratio of capacity retention shall be agreed between the manufacturer and the purchaser. The minimum value should be at least 90 % for a period of 12 months. The capacity measurement is carried out according to 7.2.6.

For the purpose of verifying compliance with this standard, conditional acceptance may be given after completion of the initial capacity tests.

6 Sampling and quality assurance

The use of sampling plans or product quality indices should be agreed between manufacturer and purchaser.

Where no agreement is specified, refer to ISO 2859 and ISO 21747 for sampling and quality compliance assessment advice.

7 Test methods

7.1 Shape and dimensions

7.1.1 Shape requirement

The shape of the negative contact is checked preferably by optical projection or by an open gauge according to Figure 3.

The measurement method shall be agreed between the manufacturer and the purchaser.

Withdrawn
IECNORM.COM : Click to view the full PDF of IEC 60086-3:2016 RLV

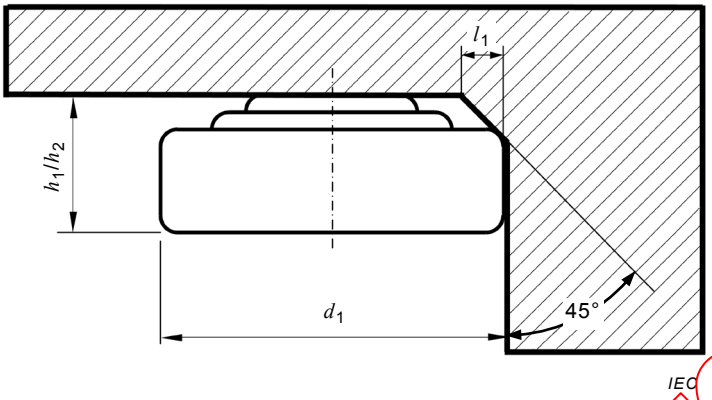

Figure 3 – Shape requirement

7.2 Electrical characteristics

7.2.1 Environmental conditions

Unless otherwise specified, the sample batteries shall be tested at a temperature of (20 ± 2) °C and a relative humidity between 55 + 20 / – 40 %.

During use, batteries may be exposed to low temperatures; it is therefore recommended to carry out complementary tests at (0 ± 2) °C and at (–10 ± 2) °C.

7.2.2 Equivalent circuit – effective internal resistance – DC method

Resistance of any electrical component determined by calculating the ratio between the voltage drop ΔU across this component and the range of current Δi passing through this component and causing the voltage drop $R_i = \Delta U / \Delta i$.

NOTE As an analogy, the internal d.c. resistance R_i of any electrochemical cell is defined by the following relation:

$$R_i\,(\Omega) = \frac{\Delta U\,(\mathrm{V})}{\Delta i\,(\mathrm{A})} \tag{1}$$

The internal d.c. resistance is illustrated by the schematic voltage transient as given below in Figure 4.

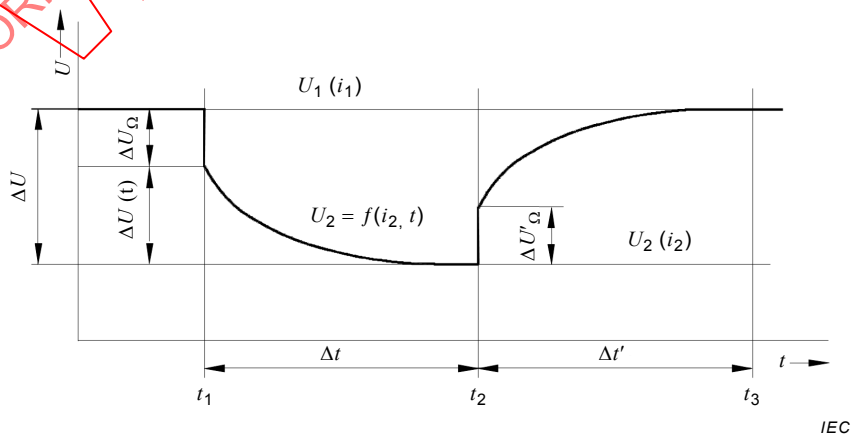

Figure 4 – Schematic voltage transient

IECNORM.COM : Click to view the full PDF of IEC 60086-3:2016 RLV
Withdrawn

As can be seen from the diagram in Figure 4, the voltage drop ΔU of the two components differs in nature, as shown in the following relation:

$$\Delta U = \Delta U_{\Omega} + \Delta U\ (t) \tag{2}$$

The first component ΔU_{Ω} for ($t = t_1$) is independent of time (ohmic drop), and results from the increase in current Δi according to the relation:

$$\Delta U_{\Omega} = \Delta i \times R_{\Omega} \tag{3}$$

In this relation, R_{Ω} is a pure ohmic resistance. The second component $\Delta U\ (t)$ is time dependent and is of electrochemical origin (capacitive reactance).

7.2.3 Equipment

The equipment used for the voltage measurements shall have the following specifications:

- accuracy: ≤0,25 %;
- precision: ≤50 % of last digit;
- internal resistance: ≥1 MΩ;
- measurement time: in the tests proposed in the following subclauses, it is important to make sure that the measurement is taken during the flat period of the voltage transient (see Figure 5). Otherwise, a measurement error due to the capacitive reactance may occur (lower internal resistance).

The time $\Delta t'$ necessary for the measurement shall be brief in comparison to Δt, and the measurement equipment compatible with these criteria.

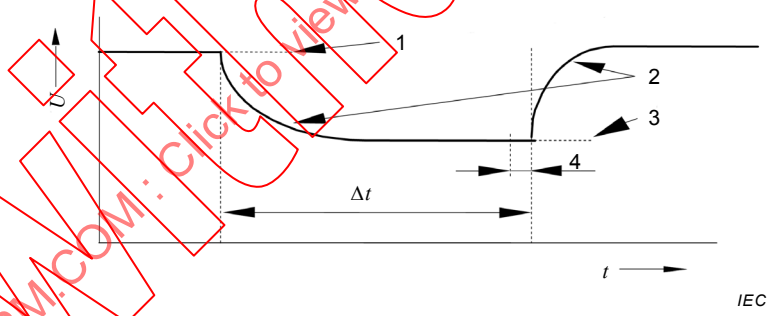

Key

1 open-circuit voltage U_{oc} (OCV)

2 effect of capacitive reactance

3 closed circuit voltage U_{cc} (CCV)

4 $\Delta t'$ (measurement U_{cc})

Figure 5 – Curve: $U = f(t)$

7.2.4 Measurement of open-circuit voltage U_{oc} (OCV) and closed circuit voltage U_{cc} (CCV)

Refer to Figure 6:

First measurement U_{oc}: The switch is left open while this measurement is being carried out.

Next measurement U_{cc}: The battery being tested shall be connected to the load R_m. The switch shall be left closed during the duration Δt according to Table 6.

Withdrawn
IECNORM.COM : Click to view the full PDF of IEC 60086-3:2016 RLV

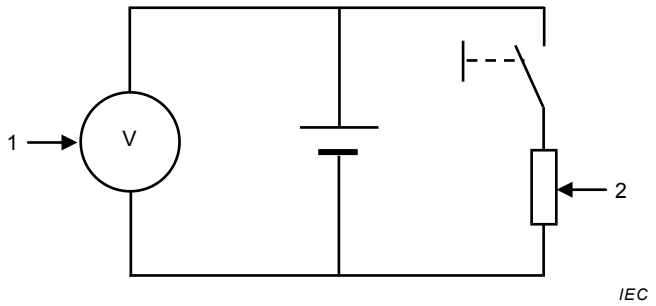

Key

1 reading U_{cc} / U_{oc}

2 R_m resistance of measurement

Figure 6 – Circuitry principle

Table 6 – Test method for U_{cc} (CCV) measurement

Test method	Battery with KOH electrolyte [a]		All other batteries	
	R_m Ω	Δt s	R_m Ω	Δt ms
A [b]	150 ± 0,5 %	1 ± 5 %	1 500 ± 0,5 %	10 ± 5 %
B [c]	150 ± 0,5 %	0,5 – 2	470 ± 0,5 %	500 – 2 000
C [d]	200 ± 0,5 %	5 ± 5 %	2 000 ± 0,5 %	7,8 ± 5 %

R_m should take into consideration the resistance of the connection lines of the battery being tested and the contact resistance of the switch.

a Application with high peak current.

b Method A (recommended test): requires specialised test equipment.

c Method B: to be used in the absence of method A test equipment.

d Method C: to be used only by agreement between the manufacturer and the purchaser.

7.2.5 Calculation of the internal resistance R_i

The internal resistance may be determined by the following calculation:

$$R_i = \frac{U_{oc} - U_{cc}}{U_{cc} / R_m}$$

NOTE The relation U_{cc} / R_m corresponds to the current delivered through the discharge resistance R_m (see 7.2.4).

7.2.6 Measurement of the capacity

7.2.6.1 General

There are two methods for measuring capacity:

– the recommended method is method A, which is more indicative of watch requirements;

– method B is a more general method and is already specified in IEC 60086-1 and IEC 60086-2.

When presenting capacity data, the manufacturer shall specify which test method was used.

IECNORM.COM : Click to view the full PDF of IEC 60086-3:2016 RLV
Withdrawn

7.2.6.2 Method A

a) Circuitry principle (see Figure 7)

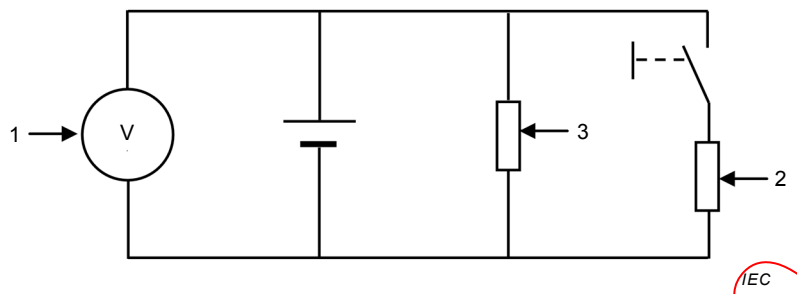

Key

1 reading U_{cc} / U'_{oc}

2 R_m resistance of measurement

3 R_d resistance of continuous discharge

Figure 7 – Circuitry principle for method A

b) Procedure

The duration of the discharge test at the resistor R_d approximates to 30 days.

Value of the resistance R_d: the value of the resistive load (specified in Tables 7 and 8) shall include all parts of the external circuit and shall be accurate to within ±0,5 %.

c) Determination of the capacity

The measurements of the open-circuit voltage U'_{oc} and that of the closed circuit voltage U_{cc} are carried out at least once a day on the battery permanently connected to R_d, until the first passage of the U_{cc} under the end-point voltage defined in Table 5 is obtained.

1) First measurement U'_{oc}: the resistance R_d being much higher than R_m, U'_{oc} approximates to U_{oc}.

   The switch is left open while the measurement is being carried out.

2) Next measurement U_{cc}: the battery being tested is connected to R_m. The switch is left closed during the duration Δt according to Table 7.

Table 7 – Test method A for U_{cc} (CCV) measurement

Batteries with KOH electrolyte		All other batteries	
R_m Ω	Δt s	R_m Ω	Δt ms
150 ± 0,5 %	1 ± 5 %	1 500 ± 0,5 %	10 ± 5 %

3) Calculation of the capacity C: the capacity of the battery is obtained by adding the partial capacity amounts C_p, calculated after each measurement with the following formula:

$$C_p = \frac{U'_{oc} \times t_i}{R_d}$$

where t_i is the time between two measurements

$$C = \Sigma\, C_p$$

4) Near the end of discharge, it is recommended to carry out several measurements a day in order to obtain sufficient accuracy.

IECNORM.COM : Click to view the full PDF of IEC 60086-3:2016 RLV
Withdrawn

7.2.6.3 Method B

a) Circuitry principle (see Figure 8)

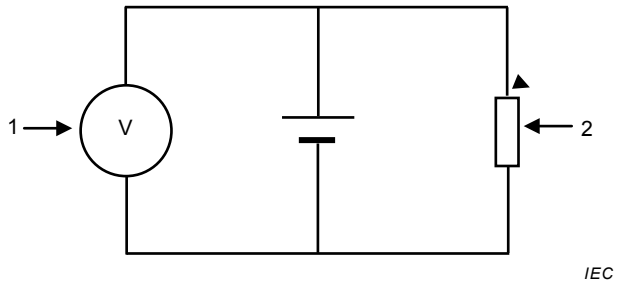

Key

1 reading U_{cc}

2 R_d resistance of continuous discharge

Figure 8 – Circuitry principle for method B

b) See procedure in 7.2.6.2 b).

c) Determination of the capacity: when the on-load voltage of the battery under test drops for the first time below the specified end point as specified in Table 5, the time t is calculated and defined as service life.

The capacity is calculated by the following formula:

$$C = \frac{U_{cc}\,(\text{average})}{R_d}\,t$$

where

C is the capacity;

U_{cc}(average) is the average voltage value of U_{cc} during discharge duration time (0-t);

t is the service life.

7.2.7 Calculation of the internal resistance R_i during discharge in case of method A (optional)

After each measurement of U'_{oc} and U_{cc} is carried out according to the procedure described in 7.2.6, it is possible to calculate the internal resistance R_i of the battery using the following formula:

$$R_i = \frac{U'_{oc} - U_{cc}}{U_{cc} / R_m}$$

Withdrawn
IECNORM.COM : Click to view the full PDF of IEC 60086-3:2016 RLV

Table 8 – Discharge resistance (values)

Code number according to the dimensions	Letter for electrochemical systems		Code number according to the dimensions	Letter for electrochemical systems	
	L	S		C	B
	Discharge resistance kΩ			Discharge resistance kΩ	
416			1025	68	
421			1212		
510			1216	62	
512			1220	62	
514			1225		30
516		82	1612		
521		68	1616	30	
527		56	1620	47	
610			1625		
612			1632		
614		120	2012	30	
616		100	2016	30	30
621		68	2020	30	
626		47	2025	15	
710			2032	15	
712		100	2312		
714		68	2316		
716		68	2320	15	15
721		47	2325		15
726		33	2412		
731		27	2416		
736	22	22	2330	15	
754		15	2430	15	
910					
912					
914					
916		47			
920		33			
921		33			
927		22			
936		15			
1110					
1112					
1114					
1116		39			
1120		22			
1121	22	22			
1126		15			
1130	15	15			
1136		15			
1142	10	10			
1154	6,8	6,8			

NOTE Blank values under consideration.

IECNORM.COM : Click to view the full PDF of IEC 60086-3:2016 RLV
Withdrawn

7.3 Test methods for determining the resistance to leakage

7.3.1 Preconditioning and initial visual examination

Before carrying out the tests specified in 7.3.2 and 7.3.3, the batteries shall be submitted to a visual examination according to the requirements stated in Clause 8.

For tests in 7.3.2.1 and 7.3.2.2, batteries shall be pre-stored at the specified temperature (40 °C and 45 °C respectively) for 2 h. Batteries shall be moved from the preconditioning (alternative pre-stored) chamber (or oven) into the high temperature and humidity test chamber within minutes in order to avoid cooling of the battery and the risk of condensation at elevated humidity.

7.3.2 High temperature and humidity test

7.3.2.1 Recommended test

The battery shall be stored under the conditions specified in Table 9.

Table 9 – Storage conditions for the recommended test

Temperature °C	Relative humidity %	Test time days
40 ± 2	90 to 95	30 or 90
The test time of 30 days may be used for an accelerated routine quality control test, whereas the test time of 90 days applies to qualification testing of new batteries.		

7.3.2.2 Optional test

After agreement between the manufacturer and purchaser, the following testing conditions may be chosen (see Table 10).

Table 10 – Storage conditions for optional test

Temperature °C	Relative humidity %	Test time days
45 ± 2	90 to 95	20 or 60
The test time of 20 days may be used for an accelerated routine quality control test, whereas the test time of 60 days applies to qualification testing of new batteries.		

7.3.3 Test by temperature cycles

The battery shall be submitted to 150 temperature cycles according to the schedule in Figure 9:

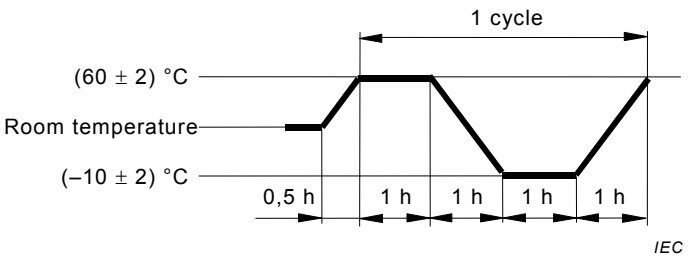

Figure 9 – Test by temperature cycles

IECNORM.COM : Click to view the full PDF of IEC 60086-3:2016 RLV

8 Visual examination and acceptance conditions

8.1 Preconditioning

Before carrying out the initial visual examination or after the tests specified in Clause 7, the batteries shall be stored for at least 24 h at room temperature and at a relative humidity between 55 ± 20 %.

The leakage should be observed after crystallisation of the electrolyte. The time of the storage of 24 h can be prolonged if necessary. This examination may be applied to new or used batteries, or to batteries which have been submitted to different tests.

8.2 Magnification

The visual examination shall be carried out at a magnification of x15.

8.3 Lighting

The visual examination shall be carried out under a diffuse white light of 900 lx to 1 100 lx at the surface of the battery to be inspected.

8.4 Leakage levels and classification

The visual examination shall be carried out under a diffuse white light of 900 lx to 1 100 lx at the surface of the battery to be inspected. (See Table 11).

Withdrawn
IECNORM.COM : Click to view the full PDF of IEC 60086-3:2016 RLV

Table 11 – Leakage levels and classification *(1 of 2)*

Leakage levels		Diagram	Definition
Classification	**Grade**		
Salting	S1	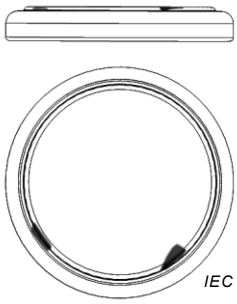	Little salting found near the gasket, affecting less than 10 % of the perimeter of the gasket, detected while observing at a magnification of x15. The leak is not detectable with the naked eye
	S2	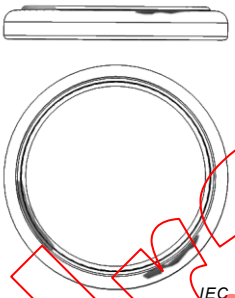	Traces of salting near gasket can be detected with the naked eye. At a magnification of x15, it may be noted that these salts affect more than 10 % of the perimeter of the gasket
	S3	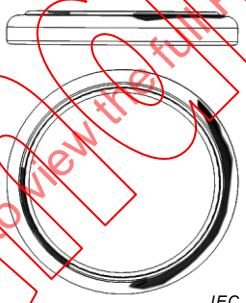	Salt spreads on both sides of the gasket can be detected with the naked eye, but do not reach the flat of the negative contact
Clouds	C1		Leaks spread in clouds on both sides of the gasket, do reach the flat of the negative contact but do not reach the central part of the flat negative contact
	C2	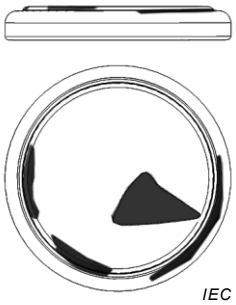	Leaks spread in clouds, which reach the central part of the flat negative contact

IECNORM.COM : Click to view the full PDF of IEC 60086-3:2016 RLV
Withdrawn

Table 11 *(2 of 2)*

Leakage levels		Diagram	Definition
Classification	**Grade**		
Leaks	L1	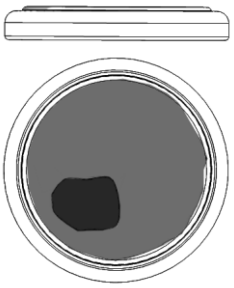	The accumulation of crystallised liquid coming from the electrolyte swells up on part of the cloud spread, which covers the entire surface of the flat negative contact
	L2	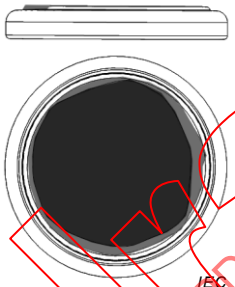	The accumulation of crystallised liquid coming from the electrolyte swells up on the entire cloud spread, which covers the entire surface of the flat negative contact

8.5 Acceptance conditions

The acceptable level, as well as the proportion of defective pieces, shall be agreed between the manufacturer and the purchaser.

Fresh batteries, with a level of leakage exceeding S1, shall not be submitted for qualification. The acceptance criteria may be less restrictive for batteries which have been tested according to 7.3.2. If necessary, photographic references may be established.

IECNORM.COM : Click to view the full PDF of IEC 60086-3:2016 RLV
Withdrawn

Annex A
(normative)

Designation

Watch batteries manufactured with the express purpose of complying with this standard should be designated by a system of coded letters and numbers as shown below. However, the letter W is used to indicate compliance with IEC 60086-3.

EXAMPLE: S R 7 21 S W

Electrochemical system letter according to Table 5

Round cell: (according to IEC 60086-1)

Dimension: diameter in millimetres

Dimension: height in tenths of millimetres

Electrolyte:

– S: Sodium hydroxide NaOH (optional)
– P: Potassium hydroxide KOH (optional)
  Letter P may be left out in the case of electrochemical system letter S.
– Organic electrolyte: null

Letter W: compliance with IEC 60086-3.

Withdrawn
IECNORM.COM : Click to view the full PDF of IEC 60086-3:2016 RLV

Bibliography

IEC 60068-2-78:2001, *Environmental testing – Part 2-78: Tests – Test Cab: Damp heat, steady state*

ISO 8601:2004, *Data elements and interchange formats – Information interchange – Representation of dates and times*

ISO 2859, *Sampling procedures for inspection by attributes package*

ISO 21747, *Statistical methods – Process performance and capability statistics for measured quality characteristics*

Withdrawn
IECNORM.COM : Click to view the full PDF of IEC 60086-3:2016 RLV

SOMMAIRE

AVANT-PROPOS 28
INTRODUCTION 30
1 Domaine d'application 31
2 Références normatives 31
3 Termes et définitions 31
4 Exigences physiques 32
4.1 Dimensions, symboles et codage de la taille des piles 32
4.2 Bornes 34
4.3 Dépassement de la borne négative (h_5) 34
4.4 Forme de la borne négative 34
4.5 Résistance mécanique à la pression 35
4.6 Déformation 35
4.7 Fuites 35
4.8 Marquage 36
4.8.1 Généralités 36
4.8.2 Mise au rebut 36
5 Exigences électriques 36
5.1 Système électrochimique, tension nominale, tension d'arrêt et tension en circuit ouvert 36
5.2 Tension en circuit fermé U_{CC} (CCV), résistance interne et impédance 37
5.3 Capacité 37
5.4 Conservation de la capacité 37
6 Echantillonnage et assurance de la qualité 37
7 Méthodes d'essai 38
7.1 Forme et dimensions 38
7.1.1 Exigences de forme 38
7.2 Caractéristiques électriques 38
7.2.1 Conditions environnementales 38
7.2.2 Circuit équivalent – Résistance interne effective – Méthode en courant continu 38
7.2.3 Equipement 39
7.2.4 Mesure de la tension en circuit ouvert U_{OC} (OCV) et de la tension en circuit fermé U_{CC} (CCV) 40
7.2.5 Calcul de la résistance interne R_i 41
7.2.6 Mesure de la capacité 41
7.2.7 Calcul de la résistance interne R_i pendant la décharge dans le cas de la méthode A (facultatif) 43
7.3 Méthodes d'essai pour déterminer la résistance aux fuites 45
7.3.1 Préconditionnement et examen visuel initial 45
7.3.2 Essai à haute température et à humidité élevée 45
7.3.3 Essai par cycle de température 45
8 Examen visuel et conditions d'acceptation 46
8.1 Préconditionnement 46
8.2 Grossissement 46
8.3 Éclairage 46
8.4 Niveaux de fuite et classification 46

IECNORM.COM : Click to view the full PDF of IEC 60086-3:2016 RLV
Withdrawn

8.5 Conditions d'acceptation 48
Annexe A (normative) Désignation 49
Bibliographie 50

Figure 1 – Dessin coté 32
Figure 2 – Forme de la borne négative 35
Figure 3 – Exigences de forme 38
Figure 4 – Schéma de la tension transitoire 39
Figure 5 – Courbe: $U = f(t)$ 40
Figure 6 – Circuit de principe 40
Figure 7 – Circuit de principe pour la méthode A 42
Figure 8 – Circuit de principe pour la méthode B 43
Figure 9 – Essai par cycles de température 45

Tableau 1 – Dimensions et codage des tailles 33
Tableau 2 – Dimensions et codage des tailles 34
Tableau 3 – Valeurs minimales de l_1 35
Tableau 4 – Force F appliquée selon les dimensions de la pile 35
Tableau 5 – Systèmes électrochimiques normalisés 37
Tableau 6 – Méthode d'essai pour la mesure de U_{cc} (CCV) 41
Tableau 7 – Méthode d'essai A pour la mesure de U_{cc} (CCV) 42
Tableau 8 – Résistance de décharge (valeurs) 44
Tableau 9 – Conditions de stockage pour l'essai recommandé 45
Tableau 10 – Conditions de stockage pour l'essai facultatif 45
Tableau 11 – Niveaux de fuite et classification *(1 de 2)* 47

Withdrawn
IECNORM.COM : Click to view the full PDF of IEC 60086-3:2016 RLV

COMMISSION ÉLECTROTECHNIQUE INTERNATIONALE

_____

PILES ÉLECTRIQUES –

Partie 3: Piles pour montres

AVANT-PROPOS

1) La Commission Electrotechnique Internationale (IEC) est une organisation mondiale de normalisation composée de l'ensemble des comités électrotechniques nationaux (Comités nationaux de l'IEC). L'IEC a pour objet de favoriser la coopération internationale pour toutes les questions de normalisation dans les domaines de l'électricité et de l'électronique. A cet effet, l'IEC – entre autres activités – publie des Normes internationales, des Spécifications techniques, des Rapports techniques, des Spécifications accessibles au public (PAS) et des Guides (ci-après dénommés "Publication(s) de l'IEC"). Leur élaboration est confiée à des comités d'études, aux travaux desquels tout Comité national intéressé par le sujet traité peut participer. Les organisations internationales, gouvernementales et non gouvernementales, en liaison avec l'IEC, participent également aux travaux. L'IEC collabore étroitement avec l'Organisation Internationale de Normalisation (ISO), selon des conditions fixées par accord entre les deux organisations.

2) Les décisions ou accords officiels de l'IEC concernant les questions techniques représentent, dans la mesure du possible, un accord international sur les sujets étudiés, étant donné que les Comités nationaux de l'IEC intéressés sont représentés dans chaque comité d'études.

3) Les Publications de l'IEC se présentent sous la forme de recommandations internationales et sont agréées comme telles par les Comités nationaux de l'IEC. Tous les efforts raisonnables sont entrepris afin que l'IEC s'assure de l'exactitude du contenu technique de ses publications, l'IEC ne peut pas être tenue responsable de l'éventuelle mauvaise utilisation ou interprétation qui en est faite par un quelconque utilisateur final.

4) Dans le but d'encourager l'uniformité internationale, les Comités nationaux de l'IEC s'engagent, dans toute la mesure possible, à appliquer de façon transparente les Publications de l'IEC dans leurs publications nationales et régionales. Toutes divergences entre toutes Publications de l'IEC et toutes publications nationales ou régionales correspondantes doivent être indiquées en termes clairs dans ces dernières.

5) L'IEC elle-même ne fournit aucune attestation de conformité. Des organismes de certification indépendants fournissent des services d'évaluation de conformité et, dans certains secteurs, accèdent aux marques de conformité de l'IEC. L'IEC n'est responsable d'aucun des services effectués par les organismes de certification indépendants.

6) Tous les utilisateurs doivent s'assurer qu'ils sont en possession de la dernière édition de cette publication.

7) Aucune responsabilité ne doit être imputée à l'IEC, à ses administrateurs, employés, auxiliaires ou mandataires, y compris ses experts particuliers et les membres de ses comités d'études et des Comités nationaux de l'IEC, pour tout préjudice causé en cas de dommages corporels et matériels, ou de tout autre dommage de quelque nature que ce soit, directe ou indirecte, ou pour supporter les coûts (y compris les frais de justice) et les dépenses découlant de la publication ou de l'utilisation de cette Publication de l'IEC ou de toute autre Publication de l'IEC, ou au crédit qui lui est accordé.

8) L'attention est attirée sur les références normatives citées dans cette publication. L'utilisation de publications référencées est obligatoire pour une application correcte de la présente publication.

9) L'attention est attirée sur le fait que certains des éléments de la présente Publication de l'IEC peuvent faire l'objet de droits de brevet. L'IEC ne saurait être tenue pour responsable de ne pas avoir identifié de tels droits de brevets et de ne pas avoir signalé leur existence.

La Norme internationale IEC 60086-3 a été établie par le comité d'études 35 de l'IEC: Piles, et par le comité technique 114 de l'ISO: Horlogerie.

Cette quatrième édition annule et remplace la troisième édition parue en 2011. Cette édition constitue une révision technique.

Cette édition inclut les modifications techniques majeures suivantes par rapport à l'édition précédente:

a) Harmonisation des tailles des éléments et des essais de capacité avec l'IEC 60086-2;

b) Clarification des Articles 6: Echantillonnage et assurance de la qualité, 7: Méthodes d'essai, et 8: Examen visuel et conditions d'acceptation;

c) Harmonisation des conditions de température et d'humidité avec celles de l'IEC 60086-1.

IECNORM.COM : Click to view the full PDF of IEC 60086-3:2016

La présente norme est une norme double logo.

Le texte de cette norme est issu des documents suivants:

FDIS	Rapport de vote
35/1359/FDIS	35/1362/RVD

Le rapport de vote indiqué dans le tableau ci-dessus donne toute information sur le vote ayant abouti à l'approbation de cette norme.

Cette publication a été rédigée selon les Directives ISO/IEC, Partie 2.

Une liste de toutes les parties de la série IEC 60086, publiées sous le titre général *Piles électriques,* peut être consultée sur le site web de l'IEC.

Le comité a décidé que le contenu de cette publication ne sera pas modifié avant la date de stabilité indiquée sur le site web de l'IEC sous "http://webstore.iec.ch" dans les données relatives à la publication recherchée. A cette date, la publication sera

- reconduite,
- supprimée,
- remplacée par une édition révisée, ou
- amendée.

Withdrawn
IECNORM.COM : Click to view the full PDF of IEC 60086-3:2016RLV

INTRODUCTION

La présente partie de l'IEC 60086 donne les exigences et les informations spécifiques aux piles électriques pour montres. Cette partie de l'IEC 60086 a été élaborée conjointement par l'IEC et l'ISO dans l'intérêt des utilisateurs de piles électriques, des concepteurs de montres et des fabricants de piles en assurant la meilleure compatibilité possible entre les piles et les montres.

La présente partie de l'IEC 60086 fera l'objet d'un suivi permanent pour en permettre la mise à jour au fur et à mesure des progrès technologiques dans le domaine des piles et des montres.

NOTE Les informations concernant la sécurité sont données dans l'IEC 60086-4 et dans l'IEC 60086-5.

Withdrawn
IECNORM.COM : Click to view the full PDF of IEC 60086-3:2016 RLV

PILES ÉLECTRIQUES –

Partie 3: Piles pour montres

1 Domaine d'application

La présente partie de l'IEC 60086 spécifie les dimensions, la désignation, les méthodes d'essai et les exigences applicables aux piles électriques pour montres. Dans certains cas, un choix de méthodes d'essai est proposé. Lorsque le fabricant présente les caractéristiques électriques et/ou les performances de la pile, il précise la méthode d'essai qui a été utilisée.

2 Références normatives

Les documents suivants sont cités en référence de manière normative, en intégralité ou en partie, dans le présent document et sont indispensables pour son application. Pour les références datées, seule l'édition citée s'applique. Pour les références non datées, la dernière édition du document de référence s'applique (y compris les éventuels amendements).

IEC 60086-1:2015, *Primary batteries – Part 1: General* (disponible en anglais seulement)

IEC 60086-2:2015, *Piles électriques – Partie 2: Spécifications physiques et électriques*

IEC 60086-4:2014, *Piles électriques – Partie 4: Sécurité des piles au lithium*

IEC 60086-5:-[1], *Piles électriques – Partie 5: Sécurité des piles à électrolyte aqueux*

3 Termes et définitions

Pour les besoins du présent document, les termes et les définitions donnés dans l'IEC 60086-1 ainsi que les suivants s'appliquent.

3.1
réactance capacitive
partie de la résistance interne qui conduit à une chute de tension au cours des premières secondes en charge

3.2
capacité
charge électrique (quantité d'électricité) qu'un élément ou une pile peut fournir dans des conditions de décharge spécifiées

Note 1 à l'article: Dans le système international SI, l'unité de charge électrique est le coulomb (1 C = 1 A·s) mais en pratique, la capacité est généralement exprimée en ampères heures (Ah).

3.3
pile récente
pile non déchargée jusqu'à 60 jours maximum après sa date de fabrication

[1] Publication à venir.

Withdrawn
IECNORM.COM : Click to view the full PDF of IEC 60086-3:2016 RLV

3.4
chute ohmique
partie de la résistance interne, qui conduit à une chute de tension immédiatement après le raccordement de la charge

4 Exigences physiques

4.1 Dimensions, symboles et codage de la taille des piles

Les dimensions et les tolérances des piles pour montres doivent être conformes à la Figure 1 et aux Tableaux 1 et 2. Les dimensions des piles doivent être soumises aux essais de 7.1.

Les symboles utilisés pour noter les différentes dimensions à la Figure 1 sont conformes à l'Article 4 de l'IEC 60086-2:2015.

Dimensions en millimètres

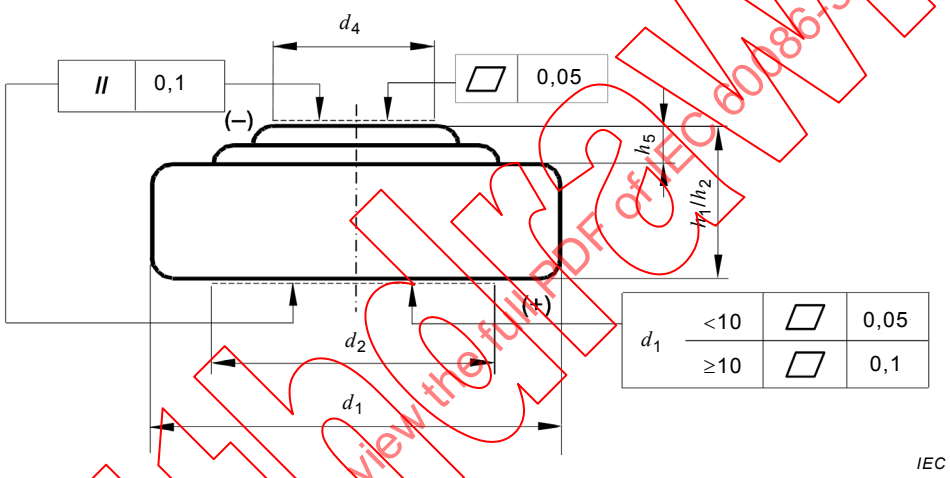

Légende

h_1 hauteur maximale hors tout de la pile

h_2 distance minimale entre les parties planes des contacts positif et négatif

h_5 dépassement minimal de la partie plane du contact négatif

d_1 diamètres maximal et minimal de la pile

d_2 diamètre minimal de la partie plane du contact positif

d_4 diamètre minimal de la partie plane du contact négatif

NOTE Cette numérotation suit les conventions d'harmonisation de la série IEC 60086.

Figure 1 – Dessin coté

IECNORM.COM : Click to view the full PDF of IEC 60086-3:2016 RLV
Withdrawn

Tableau 1 – Dimensions et codage des tailles

Dimensions en millimètres

Diamètre			d_4	Hauteur h_1/h_2														
				Code[a]														
Code[a]	d_1	Tolé-rance		10	12	14	16	20	21	25	26	27	30	31	32	36	42	54
				Tolérance														
				0 −0,10	0 −0,15	0 −0,15	0 −0,18	0 −0,20	0 −0,20	0 −0,20	0 −0,20	0 −0,20	0 −0,25	0 −0,25	0 −0,25	0 −0,25	0 −0,25	0 −0,25
4	4,8	0 −0,15					1,65		2,15									
5	5,8	0 −0,15	2,6	1,05	1,25	1,45	1,65		2,15			2,70						
6	6,8	0 −0,15	3,0	1,05	1,25	1,45	1,65		2,15		2,60							
7	7,9	0 −0,15	3,5	1,05	1,25	1,45	1,65		2,10		2,60			3,10		3,60		5,40
9	9,5	0 −0,15	4,5	1,05	1,25	1,45	1,65	2,05	2,10			2,70				3,60		
10	10,0	0 −0,30	3,0							2,50								
11	11,6	0 −0,20	6,0	1,05	1,25	1,45	1,65	2,05	2,10		2,60		3,05			3,60	4,20	5,40
12	12,5	0 −0,25	4,0		1,20		1,60	2,00		2,50								

NOTE Les cases vides de ce tableau ne sont pas nécessairement disponibles pour la normalisation en raison du concept de chevauchement des tolérances.

[a] Voir Annexe A.

IECNORM.COM : Click to view the full PDF of IEC 60086-3:2016 RLV
Withdrawn

Tableau 2 – Dimensions et codage des tailles

Dimensions en millimètres

Diamètre			d_4	Hauteur h_1/h_2					
				Code[a]					
Code[a]	d_1	Tolérance		12	16	20	25	30	32
				Tolérances					
				0 –0,20	0 –0,20	0 –0,25	0 –0,30	0 –0,30	0 –0,30
16	16	0 –0,25	5,00	1,20	1,60	2,00	2,50		3,20
20	20	0 –0,25	8,00	1,20	1,60	2,00	2,50		3,20
23	23	0 –0,30	8,00	1,20	1,60	2,00	2,50	3,00	
24	24,5	0 –0,30	8,00	1,20	1,60			3,00	

NOTE Les cases vides de ce tableau ne sont pas nécessairement disponibles pour la normalisation en raison du concept de chevauchement des tolérances.

[a] Voir Annexe A.

4.2 Bornes

Contact négatif (–): le contact négatif (dimension d_4) doit être conforme aux Tableaux 1 et 2. Cela ne s'applique pas aux piles qui ont un contact négatif à deux niveaux.

Contact positif (+): la surface cylindrique de la pile est connectée à la borne positive. Il convient que le contact positif soit réalisé sur le côté de la pile, mais il peut être réalisé à la base.

4.3 Dépassement de la borne négative (h_5)

La dimension h_5 doit être la suivante:

$h_5 \geq 0{,}02$ pour $h_1/h_2 \leq 1{,}65$

$h_5 \geq 0{,}06$ pour $1{,}65 < h_1/h_2 < 2{,}5$

$h_5 \geq 0{,}08$ pour $h_1/h_2 \geq 2{,}5$

Il convient que le contact négatif soit le point le plus haut de la pile.

4.4 Forme de la borne négative

L'encombrement doit rester à l'intérieur d'un angle de 45° (voir Figure 2).

Les valeurs minimales de l_1, pour différentes valeurs de h_1/h_2, sont données dans le Tableau 3.

IECNORM.COM : Click to view the full PDF of IEC 60086-3:2016 RLV
Withdrawn

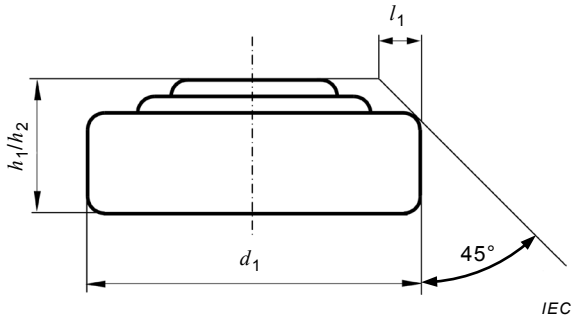

Figure 2 – Forme de la borne négative

Tableau 3 – Valeurs minimales de l_1

Dimensions en millimètres

h_1/h_2	$l_{1\,min}$
$1 < h_1/h_2 \leq 1{,}90$	0,20
$1{,}90 < h_1/h_2 \leq 3{,}10$	0,35
$3{,}60 \leq h_1/h_2 \leq 4{,}20$	0,70
$5{,}40 \leq h_1/h_2$	0,90

4.5 Résistance mécanique à la pression

Une force F (N), telle que spécifiée dans le Tableau 4, exercée pendant 10 s au moyen d'une bille en acier de 1 mm de diamètre, au centre de chaque surface de contact, ne doit pas provoquer de déformation préjudiciable au bon fonctionnement de la pile, c'est-à-dire qu'après cet essai, la pile doit satisfaire aux essais spécifiés à l'Article 7.

Tableau 4 – Force F appliquée selon les dimensions de la pile

Dimensions de la pile		Force
d_1 mm	h_1/h_2 mm	F N
<7,9	<3,0	5
	≥3,0	10
≥7,9	<3,0	10
	≥3,0	10

4.6 Déformation

Les dimensions des piles doivent rester à tout moment conformes aux dimensions spécifiées, y compris en condition de décharge jusqu'à la tension d'arrêt définie.

NOTE 1 Une augmentation jusqu'à 0,25 mm de la hauteur des piles peut se produire, lors d'une décharge en dessous de cette tension.

NOTE 2 Une diminution de la hauteur des piles peut se produire pour les systèmes B et C au fur et à mesure de la décharge.

4.7 Fuites

Les piles non déchargées et, au besoin, les piles ayant été soumises aux essais de 7.2.6 doivent être examinées comme stipulé en 7.3. Le nombre acceptable de défauts doit être fixé par un accord entre le fabricant et le client.

Withdrawn
IECNORM.COM : Click to view the full PDF of IEC 60086-3:2016 RLV

4.8 Marquage

4.8.1 Généralités

La désignation et la polarité doivent être marquées sur la pile. Il convient que le marquage de la pile n'empêche pas le contact électrique. Tous les autres marquages peuvent être indiqués sur l'emballage au lieu de l'être sur la pile:

a) la désignation selon l'Annexe normative A ou la désignation commune;

b) l'expiration de la période d'utilisation recommandée ou l'année et le mois ou la semaine de fabrication;

L'année et le mois ou la semaine de fabrication peuvent être codés. Le code est formé du dernier chiffre de l'année et d'un chiffre indiquant le mois. Il convient que les mois d'octobre, novembre et décembre soient respectivement représentés par les lettres O, Y et Z.

EXEMPLE

41: Janvier 2014;

4Y: Novembre 2014;

c) la polarité de la borne positive (+);

d) la tension nominale;

e) le nom ou la marque commerciale du fournisseur;

f) les conseils de prudence;

g) un avertissement doit être donné concernant le danger d'ingestion des piles. Se référer à l'IEC 60086-4:2014 (7.2 a) et 9.2) et à l'IEC 60086-5:-[1] (7.1 l) et 9.2) pour plus d'informations.

NOTE Des exemples de désignations communes peuvent être trouvés à l'Annexe D de l'IEC 60086-2:2015.

4.8.2 Mise au rebut

Le marquage concernant la mise au rebut des piles doit être conforme aux exigences légales locales.

5 Exigences électriques

5.1 Système électrochimique, tension nominale, tension d'arrêt et tension en circuit ouvert

Les exigences concernant le système électrochimique, la tension nominale, la tension d'arrêt et la tension en circuit ouvert sont données dans le Tableau 5.

IECNORM.COM : Click to view the full PDF of IEC 60086-3:2016 RLV
Withdrawn