IEC 60086-3

Edition 5.0 2021-04
REDLINE VERSION

INTERNATIONAL STANDARD

colour inside

Primary batteries –
Part 3: Watch batteries

IECNORM.COM : Click to view the full PDF of IEC 60086-3:2021 RLV

THIS PUBLICATION IS COPYRIGHT PROTECTED
Copyright © 2021 IEC, Geneva, Switzerland

All rights reserved. Unless otherwise specified, no part of this publication may be reproduced or utilized in any form or by any means, electronic or mechanical, including photocopying and microfilm, without permission in writing from either IEC or IEC's member National Committee in the country of the requester. If you have any questions about IEC copyright or have an enquiry about obtaining additional rights to this publication, please contact the address below or your local IEC member National Committee for further information.

IEC Central Office
3, rue de Varembé
CH-1211 Geneva 20
Switzerland

Tel.: +41 22 919 02 11
info@iec.ch
www.iec.ch

About the IEC
The International Electrotechnical Commission (IEC) is the leading global organization that prepares and publishes International Standards for all electrical, electronic and related technologies.

About IEC publications
The technical content of IEC publications is kept under constant review by the IEC. Please make sure that you have the latest edition, a corrigendum or an amendment might have been published.

IEC publications search - webstore.iec.ch/advsearchform
The advanced search enables to find IEC publications by a variety of criteria (reference number, text, technical committee, …). It also gives information on projects, replaced and withdrawn publications.

IEC Just Published - webstore.iec.ch/justpublished
Stay up to date on all new IEC publications. Just Published details all new publications released. Available online and once a month by email.

IEC Customer Service Centre - webstore.iec.ch/csc
If you wish to give us your feedback on this publication or need further assistance, please contact the Customer Service Centre: sales@iec.ch.

IEC online collection - oc.iec.ch
Discover our powerful search engine and read freely all the publications previews. With a subscription you will always have access to up to date content tailored to your needs.

Electropedia - www.electropedia.org
The world's leading online dictionary on electrotechnology, containing more than 22 000 terminological entries in English and French, with equivalent terms in 18 additional languages. Also known as the International Electrotechnical Vocabulary (IEV) online.

IECNORM.COM : Click to view the full PDF of IEC 60086-3:2021 RLV

IEC 60086-3

Edition 5.0 2021-04
REDLINE VERSION

INTERNATIONAL STANDARD

colour inside

Primary batteries –
Part 3: Watch batteries

IECNORM.COM : Click to view the full PDF of IEC 60086-3:2021 RLV

INTERNATIONAL
ELECTROTECHNICAL
COMMISSION

ICS 29.220.10; 39.040.10

ISBN 978-2-8322-9760-5

Warning! Make sure that you obtained this publication from an authorized distributor.

® Registered trademark of the International Electrotechnical Commission

CONTENTS

FOREWORD 4
INTRODUCTION 2
1 Scope 7
2 Normative references 7
3 Terms and definitions 7
4 Physical requirements 8
4.1 Battery dimensions, symbols and size codes 8
4.2 Terminals 13
4.3 Projection of the negative terminal (h_5) 13
4.4 Shape of ~~negative terminal~~ battery 13
4.5 Mechanical resistance to pressure 14
4.6 Deformation 14
4.7 Leakage 14
4.8 Marking 14
4.8.1 General 14
4.8.2 Disposal 15
5 Electrical requirements 15
5.1 Electrochemical system, nominal voltage, end-point voltage and open-circuit voltage 15
5.2 Closed circuit voltage U_{CC} (CCV), internal resistance and impedance 15
5.3 Capacity 16
5.4 Capacity retention 16
6 Sampling and quality assurance 16
7 Test methods 16
7.1 Shape and dimensions 16
7.1.1 Shape requirement 16
7.2 Electrical characteristics 17
7.2.1 Environmental conditions 17
7.2.2 Equivalent circuit – Effective internal resistance – DC method 17
7.2.3 Equipment 18
7.2.4 Measurement of open-circuit voltage U_{OC} (OCV) and closed circuit voltage U_{CC} (CCV) 18
7.2.5 Calculation of the internal resistance R_i 19
7.2.6 Measurement of the capacity 19
7.2.7 Calculation of the internal resistance R_i during discharge in case of method A (optional) 21
7.3 Test methods for determining the resistance to leakage 23
7.3.1 Preconditioning and initial visual examination 23
7.3.2 High temperature and humidity test 23
7.3.3 Test by temperature cycles 23
8 Visual examination and acceptance conditions 24
8.1 Preconditioning 24
8.2 Magnification 24
~~8.3 Lighting ..... 24~~
8.3 Leakage levels and classification 24

IECNORM.COM : Click to view the full PDF of IEC 60086-3:2021 RLV

8.4 Acceptance conditions 25
Annex A (normative) Designation 27
Bibliography 28

Figure 1 – Dimensional drawing 8
Figure 2 – Shape of ~~negative terminal~~ battery 13
Figure 3 – Shape requirement 16
Figure 4 – Schematic voltage transient 17
Figure 5 – Curve: $U = f(t)$ 18
Figure 6 – Circuitry principle 19
Figure 7 – Circuitry principle for method A 20
Figure 8 – Circuitry principle for method B 21
Figure 9 – Test by temperature cycles 23

Table 1 – Zinc systems L and S dimensions and size codes 9
Table 2 – Lithium systems B and C dimensions and size codes 11
Table 3 – ~~Minimum~~ Values of l_1 14
Table 4 – Applied force F by battery dimensions 14
Table 5 – Standardised electrochemical systems 15
Table 6 – Test method for U_{CC} (CCV) measurement 19
Table 7 – Test method A for U_{CC} (CCV) measurement 20
~~Table 8 – Discharge resistance (values) ..... .~~
Table 8 – Storage conditions for the recommended test 23
Table 9 – Storage conditions for optional test 23
Table 10 – Leakage levels and classification 24

IECNORM.COM : Click to view the full PDF of IEC 60086-3:2021 RLV

INTERNATIONAL ELECTROTECHNICAL COMMISSION

PRIMARY BATTERIES –

Part 3: Watch batteries

FOREWORD

1) The International Electrotechnical Commission (IEC) is a worldwide organization for standardization comprising all national electrotechnical committees (IEC National Committees). The object of IEC is to promote international co-operation on all questions concerning standardization in the electrical and electronic fields. To this end and in addition to other activities, IEC publishes International Standards, Technical Specifications, Technical Reports, Publicly Available Specifications (PAS) and Guides (hereafter referred to as "IEC Publication(s)"). Their preparation is entrusted to technical committees; any IEC National Committee interested in the subject dealt with may participate in this preparatory work. International, governmental and non-governmental organizations liaising with the IEC also participate in this preparation. IEC collaborates closely with the International Organization for Standardization (ISO) in accordance with conditions determined by agreement between the two organizations.

2) The formal decisions or agreements of IEC on technical matters express, as nearly as possible, an international consensus of opinion on the relevant subjects since each technical committee has representation from all interested IEC National Committees.

3) IEC Publications have the form of recommendations for international use and are accepted by IEC National Committees in that sense. While all reasonable efforts are made to ensure that the technical content of IEC Publications is accurate, IEC cannot be held responsible for the way in which they are used or for any misinterpretation by any end user.

4) In order to promote international uniformity, IEC National Committees undertake to apply IEC Publications transparently to the maximum extent possible in their national and regional publications. Any divergence between any IEC Publication and the corresponding national or regional publication shall be clearly indicated in the latter.

5) IEC itself does not provide any attestation of conformity. Independent certification bodies provide conformity assessment services and, in some areas, access to IEC marks of conformity. IEC is not responsible for any services carried out by independent certification bodies.

6) All users should ensure that they have the latest edition of this publication.

7) No liability shall attach to IEC or its directors, employees, servants or agents including individual experts and members of its technical committees and IEC National Committees for any personal injury, property damage or other damage of any nature whatsoever, whether direct or indirect, or for costs (including legal fees) and expenses arising out of the publication, use of, or reliance upon, this IEC Publication or any other IEC Publications.

8) Attention is drawn to the Normative references cited in this publication. Use of the referenced publications is indispensable for the correct application of this publication.

9) Attention is drawn to the possibility that some of the elements of this IEC Publication may be the subject of patent rights. IEC shall not be held responsible for identifying any or all such patent rights.

This redline version of the official IEC Standard allows the user to identify the changes made to the previous edition IEC 60086-3:2016. A vertical bar appears in the margin wherever a change has been made. Additions are in green text, deletions are in strikethrough red text.

IECNORM.COM : Click to view the full PDF of IEC 60086-3:2021 RLV

International Standard IEC 60086-3 has been prepared by IEC technical committee 35: Primary cells and batteries, and ISO technical committee 114: Horology.

This fifth edition cancels and replaces the fourth edition published in 2016. This edition constitutes a technical revision.

This edition includes the following significant technical changes with respect to the previous edition:

a) reformatted Table 1 and Table 2. The reformatted tables are now divided by system. Dimensional tolerances were changed when appropriate. Cell sizes were removed or added based on the size prevalence in the market place;

b) in Table 3 the minimum values of l_1 were reformatted;

c) the minimum OCV for the S system in Table 5 was changed to 1,55 V.

The text of this International Standard is based on the following documents:

FDIS	Report on voting
35/1467/FDIS	35/1470/RVD

Full information on the voting for the approval of this International Standard can be found in the report on voting indicated in the above table.

The language used for the development of this International Standard is English.

This document was drafted in accordance with ISO/IEC Directives, Part 2, and developed in accordance with ISO/IEC Directives, Part 1 and ISO/IEC Directives, IEC Supplement, available at www.iec.ch/members_experts/refdocs. The main document types developed by IEC are described in greater detail at www.iec.ch/standardsdev/publications.

A list of all parts in the IEC 60086 series, published under the general title *Primary batteries*, can be found on the IEC website.

The committee has decided that the contents of this document will remain unchanged until the stability date indicated on the IEC website under "http://webstore.iec.ch" in the data related to the specific document. At this date, the document will be

- reconfirmed,
- withdrawn,
- replaced by a revised edition, or
- amended.

IMPORTANT – The 'colour inside' logo on the cover page of this publication indicates that it contains colours which are considered to be useful for the correct understanding of its contents. Users should therefore print this document using a colour printer.

IECNORM.COM : Click to view the full PDF of IEC 60086-3:2021 RLV

INTRODUCTION

This part of IEC 60086 provides specific requirements and information for primary watch batteries. This part of IEC 60086 was prepared through joint work between the IEC and ISO to benefit primary battery users, watch designers and battery manufacturers by ensuring the best compatibility between batteries and watches.

This part of IEC 60086 will remain under continual scrutiny to ensure that the publication is kept up to date with the advances in both battery and watch technologies.

NOTE Safety information is available in IEC 60086-4 and IEC 60086-5.

IECNORM.COM : Click to view the full PDF of IEC 60086-3:2021 RLV

PRIMARY BATTERIES –

Part 3: Watch batteries

1 Scope

This part of IEC 60086 specifies dimensions, designation, methods of tests and requirements for primary batteries for watches. In several cases, a menu of test methods is given. When presenting battery electrical characteristics and/or performance data, the manufacturer specifies which test method was used.

2 Normative references

The following documents are referred to in the text in such a way that some or all of their content constitutes requirements of this document. For dated references, only the edition cited applies. For undated references, the latest edition of the referenced document (including any amendments) applies.

IEC 60086-1~~:2015~~, *Primary batteries – Part 1: General*

IEC 60086-2~~:2015~~, *Primary batteries – Part 2: Physical and electrical specifications*

IEC 60086-4~~:2014~~, *Primary batteries – Part 4: Safety of lithium batteries*

IEC 60086-5~~: [1]~~, *Primary batteries – Part 5: Safety of batteries with aqueous electrolyte*

3 Terms and definitions

For the purposes of this document, the terms and definitions given in IEC 60086-1 and the following apply.

ISO and IEC maintain terminological databases for use in standardization at the following addresses:

- IEC Electropedia: available at http://www.electropedia.org/
- ISO Online browsing platform: available at http://www.iso.org/obp

3.1
capacitive reactance
part of the internal resistance that leads to a voltage drop during the first seconds under load

3.2
capacity
electric charge (quantity of electricity) which a cell or battery can deliver under specified discharge conditions

Note 1 to entry: The SI unit for electric charge is the coulomb (1 C = 1 As) but, in practice, capacity is usually expressed in ampere hours (Ah).

[1] ~~To be published.~~

IECNORM.COM : Click to view the full PDF of IEC 60086-3:2021 RLV

3.3
fresh battery
undischarged battery 60 days maximum after date of manufacture

3.4
ohmic drop
part of the internal resistance that leads to a voltage drop immediately after switching the load on

4 Physical requirements

4.1 Battery dimensions, symbols and size codes

Dimensions and tolerances of batteries for watches shall be in accordance with Figure 1, Table 1 and Table 2. The dimensions of the batteries shall be tested in accordance with 7.1.

The symbols used to denote the various dimensions in Figure 1 are in accordance with IEC 60086-2:~~2015~~2021, Clause 4.

Dimensions in millimetres

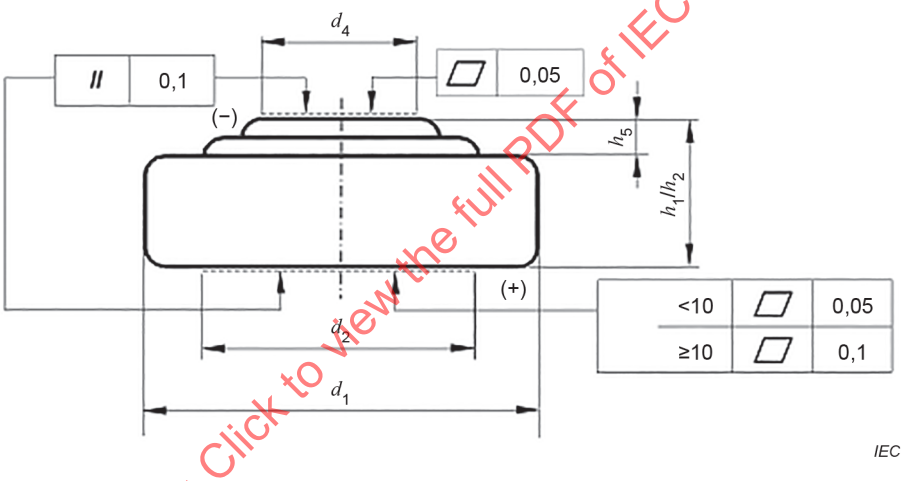

Key

h_1 maximum overall height of the battery

h_2 minimum distance between the flats of the positive and negative contacts

h_5 minimum projection of the flat negative contact

d_1 maximum and minimum diameter of the battery

d_2 minimum diameter of the flat positive contact

d_4 minimum diameter of the flat negative contact

NOTE This numbering follows the harmonization in the IEC 60086 series.

Figure 1 – Dimensional drawing

IECNORM.COM : Click to view the full PDF of IEC 60086-3:2021 RLV

Table 1 – Zinc systems L and S dimensions and size codes

~~*Dimensions in millimetres*~~

~~Diameter~~			d_4	~~Height~~ h_1/h_2														
				~~Code[a]~~														
~~Code[a]~~	d_1	~~Tole-rance~~		~~10~~	~~12~~	~~14~~	~~16~~	~~20~~	~~21~~	~~25~~	~~26~~	~~27~~	~~30~~	~~31~~	~~32~~	~~36~~	~~42~~	~~54~~
				~~Tolerance~~														
				~~0 −0,10~~	~~0 −0,15~~	~~0 −0,15~~	~~0 −0,18~~	~~0 −0,20~~	~~0 −0,20~~	~~0 −0,20~~	~~0 −0,20~~	~~0 −0,20~~	~~0 −0,25~~	~~0 −0,25~~	~~0 −0,25~~	~~0 −0,25~~	~~0 −0,25~~	~~0 −0,25~~
~~4~~	~~4,8~~	~~0 −0,15~~					~~1,65~~		~~2,15~~									
~~5~~	~~5,8~~	~~0 −0,15~~	~~2,6~~	~~1,05~~	~~1,25~~	~~1,45~~	~~1,65~~		~~2,15~~			~~2,70~~						
~~6~~	~~6,8~~	~~0 −0,15~~	~~3,0~~	~~1,05~~	~~1,25~~	~~1,45~~	~~1,65~~		~~2,15~~		~~2,60~~							
~~7~~	~~7,9~~	~~0 −0,15~~	~~3,5~~	~~1,05~~	~~1,25~~	~~1,45~~	~~1,65~~		~~2,10~~		~~2,60~~			~~3,10~~		~~3,60~~		~~5,40~~
~~9~~	~~9,5~~	~~0 −0,15~~	~~4,5~~	~~1,05~~	~~1,25~~	~~1,45~~	~~1,65~~	~~2,05~~	~~2,10~~			~~2,70~~				~~3,60~~		
~~10~~	~~10,0~~	~~0 −0,30~~	~~3,0~~							~~2,50~~								
~~11~~	~~11,6~~	~~0 −0,20~~	~~6,0~~	~~1,05~~	~~1,25~~	~~1,45~~	~~1,65~~	~~2,05~~	~~2,10~~		~~2,60~~		~~3,05~~			~~3,60~~	~~4,20~~	~~5,40~~
~~12~~	~~12,5~~	~~0 −0,25~~	~~4,0~~		~~1,20~~		~~1,60~~	~~2,00~~		~~2,50~~								

~~NOTE Open boxes in the above matrix are not necessarily available for standardisation due to the concept of overlapping tolerances.~~

~~[a] See Annex A.~~

IECNORM.COM : Click to view the full PDF of IEC 60086-3:2021 RLV

Dimensions in millimetres

Diameter			d_4	Height h_1/h_2												
				Code[a]												
Code[a]	d_1	Tolerance		10	12	14	16	20	21	26	27	30	31	36	42	54
				Tolerances												
				0 −0,10	0 −0,15	0 −0,15	0 −0,18	0 −0,20	0 −0,20	0 −0,20	0 −0,20	0 −0,20	0 −0,25	0 −0,25	0 −0,25	0 −0,25
4	4,8	0 −0,15		1,05			1,65		2,15							
5	5,8	0 −0,15	2,6	1,05	1,25		1,65		2,15		2,70					
6	6,8	0 −0,15	3,0			1,45	1,65		2,15	2,60						
7	7,9	0 −0,15	3,5		1,25	1,45	1,65		2,10	2,60			3,10	3,60		5,40
9	9,5	0 −0,15	4,5	1,05	1,25	1,45	1,65	2,05			2,70			3,60		
11	11,6	0 −0,20	6,0				1,65	2,05				3,05		3,60	4,20	5,40

NOTE Open boxes in the above matrix are not necessarily available for standardization due to the concept of overlapping tolerances.

[a] See Annex A.

IECNORM.COM : Click to view the full PDF of IEC 60086-3:2021 RLV

Table 2 – Lithium systems B and C dimensions and size codes

~~Dimensions in millimetres~~

~~Diameter~~			d_4	~~Height~~ h_1/h_2					
~~Code[a]~~	d_1	~~Tolerance~~		~~Code[a]~~					
				~~12~~	~~16~~	~~20~~	~~25~~	~~30~~	~~32~~
				~~Tolerances~~					
				~~0 −0,20~~	~~0 −0,20~~	~~0 −0,25~~	~~0 −0,30~~	~~0 −0,30~~	~~0 −0,30~~
~~16~~	~~16~~	~~0 −0,25~~	~~5,00~~	~~1,20~~	~~1,60~~	~~2,00~~	~~2,50~~		~~3,20~~
~~20~~	~~20~~	~~0 −0,25~~	~~8,00~~	~~1,20~~	~~1,60~~	~~2,00~~	~~2,50~~		~~3,20~~
~~23~~	~~23~~	~~0 −0,30~~	~~8,00~~	~~1,20~~	~~1,60~~	~~2,00~~	~~2,50~~	~~3,00~~	
~~24~~	~~24,5~~	~~0 −0,30~~	~~8,00~~	~~1,20~~	~~1,60~~			~~3,00~~	

~~NOTE Open boxes in the above matrix are not necessarily available for standardisation due to the concept of overlapping tolerances.~~

~~[a] See Annex A.~~

IECNORM.COM : Click to view the full PDF of IEC 60086-3:2021 RLV

Dimensions in millimetres

Diameter			d_4	Height h_1/h_2						
				Code[a]						
Code[a]	d_1	Tolerance		12	16	20	25	30	32	50
				Tolerances						
				0 −0,15	0 −0,18	0 −0,20	0 −0,20	0 −0,20	0 −0,25	0 −0,30
10	10,0	0 −0,15	3,0				2,50			
12	12,5	0 −0,25	4,0		1,60	2,00	2,50			
16	16	0 −0,25	5,0	1,20	1,60	2,00			3,20	
20	20	0 −0,25	8,0	1,20	1,60		2,50		3,20	
23	23	0 −0,25	8,0			2,00	2,50			
24	24,5	0 −0,25	8,0					3,00		5,00

NOTE Open boxes in the above matrix are not necessarily available for standardization due to the concept of overlapping tolerances.

[a] See Annex A.

IECNORM.COM : Click to view the full PDF of IEC 60086-3:2021 RLV

4.2 Terminals

Negative contact (–): The negative contact (dimension d_4) shall be in accordance with Table 1 and Table 2. This is not applied to those batteries with a two-step negative contact.

Positive contact (+): The cylindrical surface is connected to the positive terminal. Positive contact should be made to the side of the battery but may be made to the base.

4.3 Projection of the negative terminal (h_5)

The dimension h_5 shall be as follows:

$h_5 \geq 0{,}02$ for $h_1/h_2 \leq 1{,}65$

$h_5 \geq 0{,}06$ for $1{,}65 < h_1/h_2 < 2{,}5$

$h_5 \geq 0{,}08$ for $h_1/h_2 \geq 2{,}5$

The negative contact should be the highest point of the battery.

4.4 Shape of ~~negative terminal~~ battery

The space requirements shall ~~be contained within~~ secure the area enclosed by an angle of 45° (see Figure 2).

The ~~minimum~~ values of l_1, for different heights of h_1/h_2, are given in Table 3.

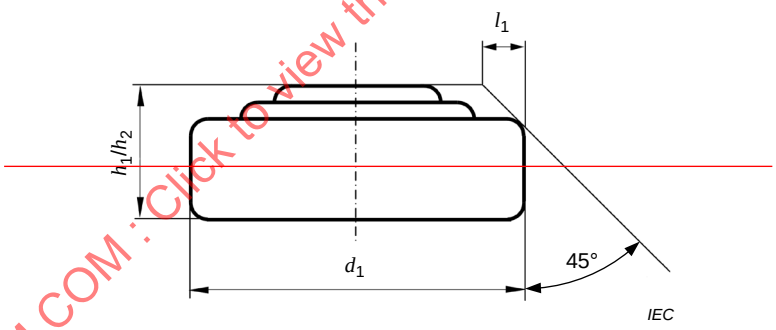

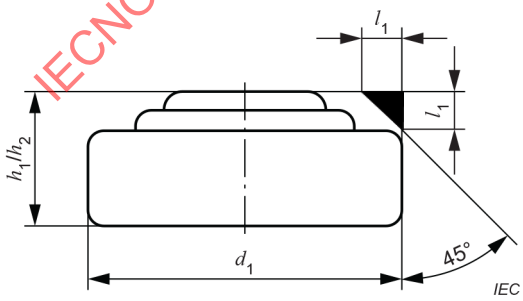

a) Figure 2a

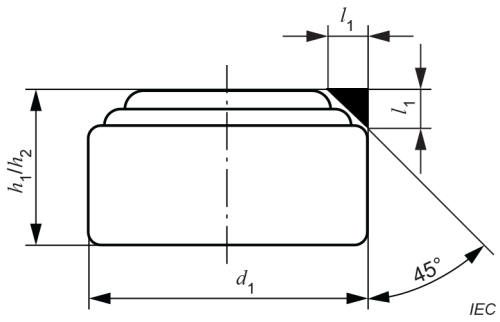

b) Figure 2b

Figure 2 – Shape of ~~negative terminal~~ battery

IECNORM.COM : Click to view the full PDF of IEC 60086-3:2021 RLV

Table 3 – ~~Minimum~~ Values of l_1

Dimensions in millimetres

h_1/h_2	$l_{1\,min}$
$1 < h_1/h_2 \leq 1{,}90$	0,20
$1{,}90 < h_1/h_2 \leq 3{,}10$	0,35
$3{,}10 < h_1/h_2 \leq 3{,}60$	0,50
$3{,}60 < h_1/h_2 \leq 4{,}20$	0,70
$4{,}20 < h_1/h_2 \leq 5.40$	0,80
$5{,}40 \leq < h_1/h_2$	0,90

4.5 Mechanical resistance to pressure

A force F (N), as specified in Table 4, applied for 10 s through a steel ball of 1 mm diameter, at the centre of each contact area, shall not cause any deformation prejudicial to the proper functioning of the battery, i.e. after this test, the battery shall pass the tests specified in Clause 7.

Table 4 – Applied force F by battery dimensions

Battery dimensions		Force
d_1 mm	h_1/h_2 mm	F N
< 7,9	<3,0	5
	≥3,0	10
≥ 7,9	<3,0	10
	≥3,0	10

4.6 Deformation

~~The dimensions of batteries shall conform with the relevant specified dimensions at all times including discharge to the defined end-point voltage.~~

~~NOTE 1 A battery height increase up to 0,25 mm can occur, if discharged below this voltage.~~

~~NOTE 2 A battery height decrease can occur in B and C systems as discharge continues.~~

Refer to IEC 60086-1 for dimensional stability.

4.7 Leakage

Undischarged batteries and, if required, batteries tested according to 7.2.6 shall be examined as stated in 7.3. The acceptable number of defects shall be agreed between the manufacturer and the purchaser.

4.8 Marking

4.8.1 General

~~The designation and the polarity shall be marked on the battery. Battery marking should not impede electrical contact. All other markings may be given on the packing instead of on the battery.~~

IECNORM.COM : Click to view the full PDF of IEC 60086-3:2021 RLV

The battery and/or its packaging must be marked with the following:

a) designation according to normative Annex A, or common;

b) expiration of a recommended usage period or year and month or week of manufacture.

The year and month or week of manufacture may be in code. The code is composed of the last digit of the year and of a number indicating the month. October, November and December should be represented by the letters O, Y and Z respectively;

EXAMPLE

~~41~~91: January ~~2014~~2019;

~~4Y~~9Y: November ~~2014~~2019.

c) polarity of the positive (+) terminal;

d) nominal voltage;

e) name or trade mark of the supplier;

f) cautionary advice;

g) caution for ingestion of batteries shall be given. Refer to IEC 60086-4~~:2014~~2019, 7.2 a) and 9.2, and IEC 60086-5:~~-1~~2016, 7.1 l) and 9.2, for details.

NOTE Examples of the common designations can be found in Annex D of IEC 60086-2:2015.

Battery marking should not impede electrical contact. The designation and the polarity shall be marked on the battery. All other markings may be given on the packing instead of the battery.

4.8.2 Disposal

Marking of batteries with respect to the method of disposal shall be in accordance with local legal requirements.

5 Electrical requirements

5.1 Electrochemical system, nominal voltage, end-point voltage and open-circuit voltage

The requirements concerning the electrochemical system, the nominal voltage, the end-point voltage and the open-circuit voltage are given in Table 5.

Table 5 – Standardised electrochemical systems

Letter	Negative electrode	Electrolyte	Positive electrode	Nominal voltage ($\cancel{V_n}$ U_n) V	End-point voltage (EV) V	Open-circuit voltage (U_{OC} or OCV) V	
						Max.	Min.
B	Lithium (Li)	Organic electrolyte	Carbon monofluoride $(CF)_x$	3,0	2,0	3,70	3,00
C	Lithium (Li)	Organic electrolyte	Manganese dioxide (MnO_2)	3,0	2,0	3,70	3,00
L	Zinc (Zn)	Alkali metal hydroxide	Manganese dioxide (MnO_2)	1,5	1,0	1,68	1,50
S	Zinc (Zn)	Alkali metal hydroxide	Silver oxide (Ag_2O)	1,55	1,2	1,63	~~1,57~~ 1,55

5.2 Closed circuit voltage U_{cc} (CCV), internal resistance and impedance

Closed circuit voltage and internal resistance shall be measured according to 7.2.

IECNORM.COM : Click to view the full PDF of IEC 60086-3:2021 RLV

AC impedance should be measured with an LCR meter.

Limit values shall be agreed between the manufacturer and the purchaser.

5.3 Capacity

The capacity shall be agreed between the manufacturer and the purchaser on the basis of a continuous discharge test ~~lasting approximately 30 days~~, according to 7.2.6.

5.4 Capacity retention

The capacity retention is the ratio between the capacities under the given discharge conditions measured on fresh batteries and a sample of the same lot stored during 365 days at (20 ± 2) °C and a relative humidity between (55 ± 20) %.

The ratio of capacity retention shall be agreed between the manufacturer and the purchaser. The minimum value should be at least 90 % for a period of 12 months. The capacity measurement is carried out according to 7.2.6.

For the purpose of verifying compliance with this document, conditional acceptance may be given after completion of the initial capacity tests.

6 Sampling and quality assurance

The use of sampling plans or product quality indices should be agreed between manufacturer and purchaser.

Where no agreement is specified, refer to ISO 2859 and ISO 21747 for sampling and quality compliance assessment advice.

7 Test methods

7.1 Shape and dimensions

7.1.1 Shape requirement

The shape of the negative contact is checked preferably by optical projection or by an open gauge according to Figure 3.

The measurement method shall be agreed between the manufacturer and the purchaser.

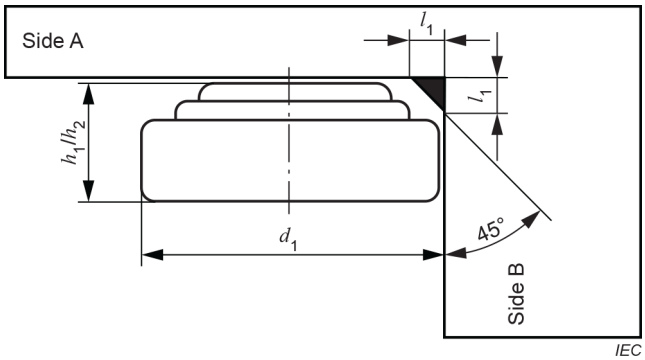

Figure 3 – Shape requirement

IECNORM.COM : Click to view the full PDF of IEC 60086-3:2021 RLV

Procedure:
The procedure to inspect with the open gauge is shown. The battery is moved toward the side A of the gauge while applying the outer periphery of the positive electrode to the side B and maintaining the flat part of the negative electrode terminal at 90 ° with respect to the side B. A battery having a gap without contact between the side A of the gauge and the flat part of the negative electrode terminal does not satisfy the requirements.

NOTE The surface of the open gauge is made of non-conductive hard resin to prevent external short circuit.

7.2 Electrical characteristics

7.2.1 Environmental conditions

Unless otherwise specified, the sample batteries shall be tested at a temperature of (20 ± 2) °C and a relative humidity between (55 $^{+20}_{-40}$) %.

During use, batteries ~~may~~ can be exposed to low temperatures; it is therefore recommended to carry out complementary tests at (0 ± 2) °C and at (−10 ± 2) °C.

7.2.2 Equivalent circuit – Effective internal resistance – DC method

Resistance of any electrical component is determined by calculating the ratio between the voltage drop ΔU across this component and the range of current Δi passing through this component and causing the voltage drop $R = \Delta U / \Delta i$.

NOTE As an analogy, the internal DC resistance R_i of any electrochemical cell is defined by the following relation:

$$R_i\ (\Omega) = \frac{\Delta U\ (\mathrm{V})}{\Delta i\ (\mathrm{A})} \tag{1}$$

The internal DC resistance is illustrated by the schematic voltage transient as given below in Figure 4.

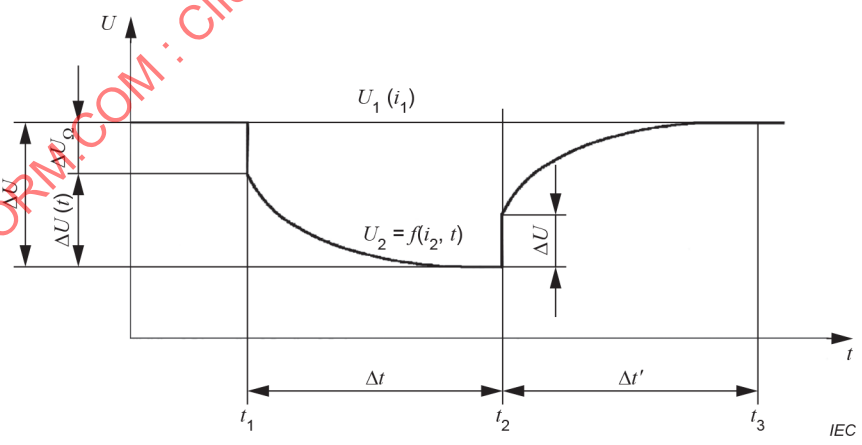

Figure 4 – Schematic voltage transient

As can be seen from the diagram in Figure 4, the voltage drop ΔU of the two components differs in nature, as shown in the following relation:

$$\Delta U = \Delta U_{\Omega} + \Delta U(t) \tag{2}$$

IECNORM.COM : Click to view the full PDF of IEC 60086-3:2021 RLV

The first component ΔU_Ω for ($t = t_1$) is independent of time (ohmic drop), and results from the increase in current Δi according to the relation:

$$\Delta U_\Omega = \Delta i \times R_\Omega \tag{3}$$

In this relation, R_Ω is a pure ohmic resistance. The second component ΔU (t) is time dependent and is of electrochemical origin (capacitive reactance).

7.2.3 Equipment

The equipment used for the voltage measurements shall have the following specifications:

- accuracy: ≤ 0,25 %;
- precision: ≤ 50 % of last digit;
- internal resistance: ≥ 1 MΩ;
- measurement time: in the tests proposed in the following subclauses, it is important to make sure that the measurement is taken during the flat period of the voltage transient (see Figure 5). Otherwise, a measurement error due to the capacitive reactance may occur (lower internal resistance).

The time $\Delta t'$ necessary for the measurement shall be brief in comparison to Δt, and the measurement equipment compatible with these criteria.

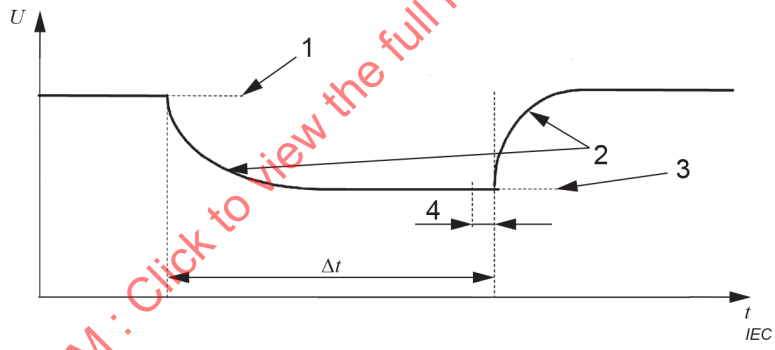

Key

1 open-circuit voltage U_{oc} (OCV)

2 effect of capacitive reactance

3 closed circuit voltage U_{cc} (CCV)

4 $\Delta t'$ (measurement U_{cc})

Figure 5 – Curve: $U = f(t)$

7.2.4 Measurement of open-circuit voltage U_{oc} (OCV) and closed circuit voltage U_{cc} (CCV)

Refer to Figure 6:

First measurement	U_{oc}: The switch is left open while this measurement is being carried out.
Next measurement	U_{cc}: The battery being tested shall be connected to the load R_m. The switch shall be left closed during the duration Δt according to Table 6.

IECNORM.COM : Click to view the full PDF of IEC 60086-3:2021 RLV

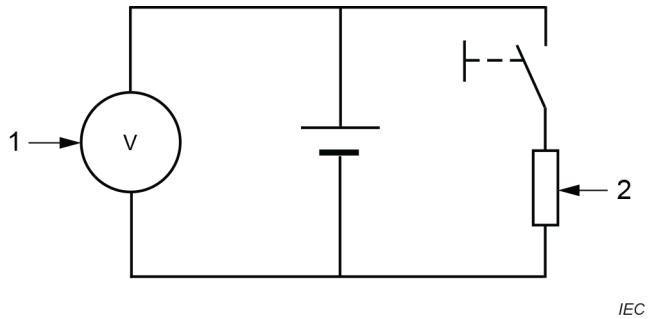

Key

1 reading U_{cc} / U_{oc}

2 R_m resistance of measurement

Figure 6 – Circuitry principle

Table 6 – Test method for U_{cc} (CCV) measurement

Test method	Battery with KOH electrolyte [a]		All other batteries	
	R_m Ω	Δt s	R_m Ω	Δt ms
A [b]	150 ± 0,5 %	1 ± 5 %	1 500 ± 0,5 %	10 ± 5 %
B [c]	150 ± 0,5 %	0,5 – 2	470 ± 0,5 %	500 – 2 000
C [d]	200 ± 0,5 %	5 ± 5 %	2 000 ± 0,5 %	7,8 ± 5 %

R_m should take into consideration the resistance of the connection lines of the battery being tested and the contact resistance of the switch.

[a] Application with high peak current.

[b] Method A (recommended test): requires specialised test equipment.

[c] Method B: to be used in the absence of method A test equipment.

[d] Method C: to be used only by agreement between the manufacturer and the purchaser.

7.2.5 Calculation of the internal resistance R_i

The internal resistance may be determined by the following calculation:

$$R_i = \frac{U_{oc} - U_{cc}}{U_{cc} / R_m} \tag{4}$$

NOTE The relation U_{cc} / R_m corresponds to the current delivered through the discharge resistance R_m (see 7.2.4).

7.2.6 Measurement of the capacity

7.2.6.1 General

There are two methods for measuring capacity:

– the recommended method is method A, which is more indicative of watch requirements;

– method B is a more general method and is already specified in IEC 60086-1 and IEC 60086-2.

When presenting capacity data, the manufacturer shall specify which test method was used.

IECNORM.COM : Click to view the full PDF of IEC 60086-3:2021 RLV

7.2.6.2 Method A

a) Circuitry principle (see Figure 7).

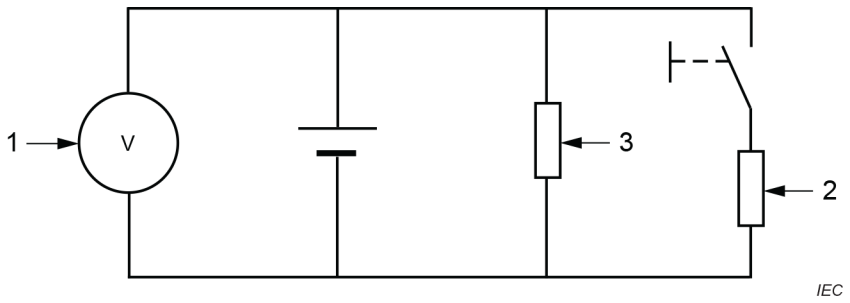

Key

1 reading U_{cc} / U'_{oc}

2 R_m resistance of measurement

3 R_d resistance of continuous discharge

Figure 7 – Circuitry principle for method A

b) Procedure

The duration of the discharge test at the resistor R_d approximates to 30 days.

Value of the resistance R_d: the value of the resistive load ~~(specified in Tables 7 and 8)~~ shall include all parts of the external circuit and shall be accurate to within ±0,5 %.

c) Determination of the capacity

The measurements of the open-circuit voltage U'_{oc} and that of the closed circuit voltage U_{cc} are carried out at least once a day on the battery permanently connected to R_d, until the first passage of the U_{cc} under the end-point voltage defined in Table 5 is obtained.

1) First measurement U'_{oc}: the resistance R_d being much higher than R_m, U'_{oc} approximates to U_{oc}.

The switch is left open while the measurement is being carried out.

2) Next measurement U_{cc}: the battery being tested is connected to R_m. The switch is left closed during the duration Δt according to Table 7.

Table 7 – Test method A for U_{cc} (CCV) measurement

Batteries with KOH electrolyte		All other batteries	
R_m Ω	Δt s	R_m Ω	Δt ms
150 ± 0,5 %	1 ± 5 %	1 500 ± 0,5 %	10 ± 5 %

3) Calculation of the capacity C: the capacity of the battery is obtained by adding the partial capacity amounts C_p, calculated after each measurement by the following formula:

$$C_p = \frac{U'_{oc} \times t_i}{R_d} \tag{5}$$

where t_i is the time between two measurements

$$C = \Sigma\, C_p \tag{6}$$

IECNORM.COM : Click to view the full PDF of IEC 60086-3:2021 RLV

4) Near the end of discharge, it is recommended to carry out several measurements of U'_{oc} a day in order to obtain sufficient accuracy.

7.2.6.3 Method B

a) Circuitry principle (see Figure 8).

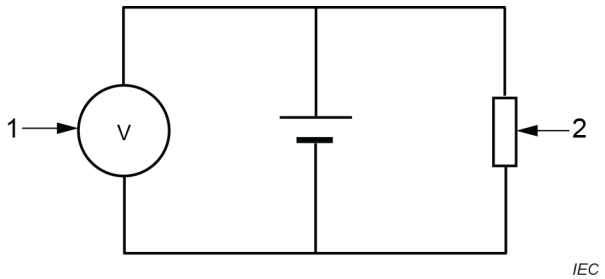

Key

1 reading U_{cc}

2 R_d resistance of continuous discharge

Figure 8 – Circuitry principle for method B

b) See procedure in 7.2.6.2 b).

c) Determination of the capacity: when the on-load voltage of the battery under test drops for the first time below the specified end point voltage as specified in Table 5, the time t is calculated and defined as service life.

The capacity is calculated by the following formula:

$$C = \frac{U_{cc}\,(\text{average})}{R_d}\,t \tag{7}$$

where

C	is the capacity;
U_{cc}(average)	is the average voltage value of U_{cc} during discharge duration time (0 – t);
t	is the service life.

7.2.7 Calculation of the internal resistance R_i during discharge in case of method A (optional)

After each measurement of U'_{oc} and U_{cc} is carried out according to the procedure described in 7.2.6, it is possible to calculate the internal resistance R_i of the battery by using the following formula:

$$R_i = \frac{U'_{oc} - U_{cc}}{U_{cc} / R_m} \tag{8}$$

IECNORM.COM : Click to view the full PDF of IEC 60086-3:2021 RLV

~~Table 8 – Discharge resistance (values)~~

~~Code number according to the dimensions~~	~~Letter for electrochemical systems~~		~~Code number according to the dimensions~~	~~Letter for electrochemical systems~~	
	~~L~~	~~S~~		~~C~~	~~B~~
	~~Discharge resistance~~ ~~kΩ~~			~~Discharge resistance~~ ~~kΩ~~	
~~416~~			~~1025~~	~~68~~	
~~421~~			~~1212~~		
~~510~~			~~1216~~	~~62~~	
~~512~~			~~1220~~	~~62~~	
~~514~~			~~1225~~		~~30~~
~~516~~		~~82~~	~~1612~~		
~~521~~		~~68~~	~~1616~~	~~30~~	
~~527~~		~~56~~	~~1620~~	~~47~~	
~~610~~			~~1625~~		
~~612~~			~~1632~~		
~~614~~		~~120~~	~~2012~~	~~30~~	
~~616~~		~~100~~	~~2016~~	~~30~~	~~30~~
~~621~~		~~68~~	~~2020~~	~~30~~	
~~626~~		~~47~~	~~2025~~	~~15~~	
~~710~~			~~2032~~	~~15~~	
~~712~~		~~100~~	~~2312~~		
~~714~~		~~68~~	~~2316~~		
~~716~~		~~68~~	~~2320~~	~~15~~	~~15~~
~~721~~		~~47~~	~~2325~~		~~15~~
~~726~~		~~33~~	~~2412~~		
~~731~~		~~27~~	~~2416~~		
~~736~~	~~22~~	~~22~~	~~2330~~	~~15~~	
~~754~~		~~15~~	~~2430~~	~~15~~	
~~910~~					
~~912~~					
~~914~~					
~~916~~		~~47~~			
~~920~~		~~33~~			
~~921~~		~~33~~			
~~927~~		~~22~~			
~~936~~		~~15~~			
~~1110~~					
~~1112~~					
~~1114~~					
~~1116~~		~~39~~			
~~1120~~		~~22~~			
~~1121~~	~~22~~	~~22~~			
~~1126~~		~~15~~			
~~1130~~	~~15~~	~~15~~			
~~1136~~		~~15~~			
~~1142~~	~~10~~	~~10~~			
~~1154~~	~~6,8~~	~~6,8~~			
~~NOTE – Blank values under consideration.~~					

IECNORM.COM : Click to view the full PDF of IEC 60086-3:2021 RLV

7.3 Test methods for determining the resistance to leakage

7.3.1 Preconditioning and initial visual examination

Before carrying out the tests specified in 7.3.2 and 7.3.3, the batteries shall be submitted to a visual examination according to the requirements stated in Clause 8.

For tests in 7.3.2.1 and 7.3.2.2, batteries shall be pre-stored at the specified temperature (40 °C and 45 °C respectively) for 2 h. Batteries shall be moved from the preconditioning (alternative pre-stored) chamber (or oven) into the high temperature and humidity test chamber within minutes in order to avoid cooling of the battery and the risk of condensation at elevated humidity.

7.3.2 High temperature and humidity test

7.3.2.1 Recommended test

The battery shall be stored under the conditions specified in Table 8.

Table 8 – Storage conditions for the recommended test

Temperature °C	Relative humidity %	Test time days
40 ± 2	90 to 95	30 or 90
The test time of 30 days may be used for an accelerated routine quality control test, whereas the test time of 90 days applies to qualification testing of new batteries.		

7.3.2.2 Optional test

After agreement between the manufacturer and purchaser, the following testing conditions may be chosen (see Table 9).

Table 9 – Storage conditions for optional test

Temperature °C	Relative humidity %	Test time days
45 ± 2	90 to 95	20 or 60
The test time of 20 days may be used for an accelerated routine quality control test, whereas the test time of 60 days applies to qualification testing of new batteries.		

7.3.3 Test by temperature cycles

The battery shall be submitted to 150 temperature cycles according to the schedule in Figure 9:

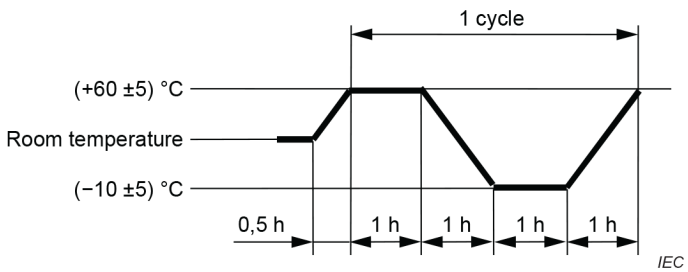

Figure 9 – Test by temperature cycles

IECNORM.COM : Click to view the full PDF of IEC 60086-3:2021 RLV

8 Visual examination and acceptance conditions

8.1 Preconditioning

Before carrying out the initial visual examination or after the tests specified in Clause 7, the batteries shall be stored for at least 24 h at room temperature and at a relative humidity between (55 ± 20) %.

The leakage should be observed after crystallisation of the electrolyte. The time of the storage of 24 h can be prolonged if necessary. This examination may be applied to new or used batteries, or to batteries which have been submitted to different tests.

8.2 Magnification

The visual examination shall be carried out at a magnification of x15.

~~8.3 Lighting~~

~~The visual examination shall be carried out under a diffuse white light of 900 lx to 1 100 lx at the surface of the battery to be inspected.~~

8.3 Leakage levels and classification

The visual examination shall be carried out under a diffuse white light of 900 lx to 1 100 lx at the surface of the battery to be inspected (see Table 10).

Table 10 – Leakage levels and classification

Leakage levels		Diagram	Definition
Classification	Grade		
Salting	S1	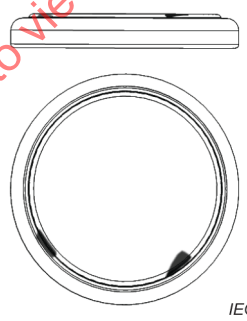	Little salting found near the gasket, affecting less than 10 % of the perimeter of the gasket, detected while observing at a magnification of x15. The leak is not detectable with the naked eye.
	S2	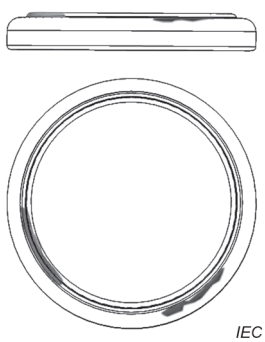	Traces of salting near gasket can be detected with the naked eye. At a magnification of x15, it may be noted that these salts affect more than 10 % of the perimeter of the gasket.

IECNORM.COM : Click to view the full PDF of IEC 60086-3:2021 RLV

Leakage levels		Diagram	Definition
Classification	Grade		
	S3	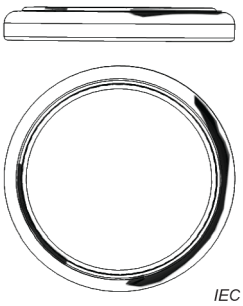	Salt spreads on both sides of the gasket can be detected with the naked eye, but do not reach the flat of the negative contact.
Clouds	C1	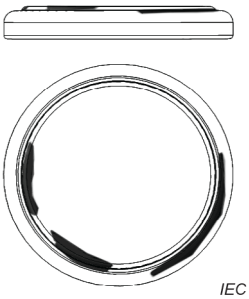	Leaks spread in clouds on both sides of the gasket, do reach the flat of the negative contact but do not reach the central part of the flat negative contact.
	C2		Leaks spread in clouds, which reach the central part of the flat negative contact.
Leaks	L1	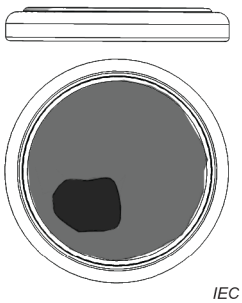	The accumulation of crystallised liquid coming from the electrolyte swells up on part of the cloud spread, which covers the entire surface of the flat negative contact.
	L2	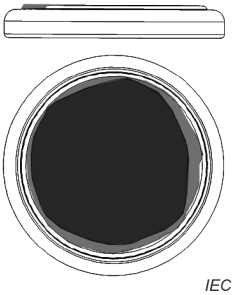	The accumulation of crystallised liquid coming from the electrolyte swells up on the entire cloud spread, which covers the entire surface of the flat negative contact.

IECNORM.COM : Click to view the full PDF of IEC 60086-3:2021 RLV

8.4 Acceptance conditions

The acceptable level, as well as the proportion of defective pieces, shall be agreed between the manufacturer and the purchaser.

Fresh batteries, with a level of leakage exceeding S1, shall not be submitted for qualification. The acceptance criteria may be less restrictive for batteries which have been tested according to 7.3.2. If necessary, photographic references may be established.

IECNORM.COM : Click to view the full PDF of IEC 60086-3:2021 RLV

Annex A
(normative)

Designation

Watch batteries manufactured with the express purpose of complying with this document should be designated by a system of coded letters and numbers as shown below. However, the letter W is used to indicate compliance with IEC 60086-3.

EXAMPLE: S R 7 21 S W

Electrochemical system letter according to Table 5

Round cell: (according to IEC 60086-1)

Dimension: diameter in millimetres

Dimension: height in tenths of millimetres

Electrolyte:

– S: Sodium hydroxide NaOH (optional)
– P: Potassium hydroxide KOH (optional)
  Letter P may be left out in the case of electrochemical system letter S.
– Organic electrolyte: null

Letter W: compliance with IEC 60086-3

IECNORM.COM : Click to view the full PDF of IEC 60086-3:2021 RLV

Bibliography

IEC 60068-2-78:2001, *Environmental testing – Part 2-78: Tests – Test Cab: Damp heat, steady state*

ISO 2859, *Sampling procedures for inspection by attributes* ~~*package*~~

ISO 8601:2004, *Data elements and interchange formats – Information interchange – Representation of dates and times*

ISO 21747, *Statistical methods – Process performance and capability statistics for measured quality characteristics*

IECNORM.COM : Click to view the full PDF of IEC 60086-3:2021 RLV

IEC 60086-3

Edition 5.0 2021-04

INTERNATIONAL STANDARD

Primary batteries –
Part 3: Watch batteries

IECNORM.COM : Click to view the full PDF of IEC 60086-3:2021 RLV

IEC 60086-3:2021-04(en)

CONTENTS

FOREWORD 4
INTRODUCTION 6
1 Scope 7
2 Normative references 7
3 Terms and definitions 7
4 Physical requirements 8
4.1 Battery dimensions, symbols and size codes 8
4.2 Terminals 11
4.3 Projection of the negative terminal (h_5) 11
4.4 Shape of battery 11
4.5 Mechanical resistance to pressure 12
4.6 Deformation 12
4.7 Leakage 12
4.8 Marking 12
4.8.1 General 12
4.8.2 Disposal 13
5 Electrical requirements 13
5.1 Electrochemical system, nominal voltage, end-point voltage and open-circuit voltage 13
5.2 Closed circuit voltage U_{CC} (CCV), internal resistance and impedance 13
5.3 Capacity 13
5.4 Capacity retention 13
6 Sampling and quality assurance 14
7 Test methods 14
7.1 Shape and dimensions 14
7.1.1 Shape requirement 14
7.2 Electrical characteristics 14
7.2.1 Environmental conditions 14
7.2.2 Equivalent circuit – Effective internal resistance – DC method 14
7.2.3 Equipment 15
7.2.4 Measurement of open-circuit voltage U_{OC} (OCV) and closed circuit voltage U_{CC} (CCV) 16
7.2.5 Calculation of the internal resistance R_i 17
7.2.6 Measurement of the capacity 17
7.2.7 Calculation of the internal resistance R_i during discharge in case of method A (optional) 19
7.3 Test methods for determining the resistance to leakage 19
7.3.1 Preconditioning and initial visual examination 19
7.3.2 High temperature and humidity test 20
7.3.3 Test by temperature cycles 20
8 Visual examination and acceptance conditions 20
8.1 Preconditioning 20
8.2 Magnification 21
8.3 Leakage levels and classification 21
8.4 Acceptance conditions 22

IECNORM.COM : Click to view the full PDF of IEC 60086-3:2021 RLV

Annex A (normative) Designation 23
Bibliography 24

Figure 1 – Dimensional drawing 8
Figure 2 – Shape of battery 11
Figure 3 – Shape requirement 14
Figure 4 – Schematic voltage transient 15
Figure 5 – Curve: $U = f(t)$ 16
Figure 6 – Circuitry principle 16
Figure 7 – Circuitry principle for method A 18
Figure 8 – Circuitry principle for method B 19
Figure 9 – Test by temperature cycles 20

Table 1 – Zinc systems L and S dimensions and size codes 9
Table 2 – Lithium systems B and C dimensions and size codes 10
Table 3 – Values of l_1 11
Table 4 – Applied force F by battery dimensions 12
Table 5 – Standardised electrochemical systems 13
Table 6 – Test method for U_{CC} (CCV) measurement 17
Table 7 – Test method A for U_{CC} (CCV) measurement 18
Table 8 – Storage conditions for the recommended test 20
Table 9 – Storage conditions for optional test 20
Table 10 – Leakage levels and classification 21

IECNORM.COM : Click to view the full PDF of IEC 60086-3:2021 RLV

INTERNATIONAL ELECTROTECHNICAL COMMISSION

PRIMARY BATTERIES –

Part 3: Watch batteries

FOREWORD

1) The International Electrotechnical Commission (IEC) is a worldwide organization for standardization comprising all national electrotechnical committees (IEC National Committees). The object of IEC is to promote international co-operation on all questions concerning standardization in the electrical and electronic fields. To this end and in addition to other activities, IEC publishes International Standards, Technical Specifications, Technical Reports, Publicly Available Specifications (PAS) and Guides (hereafter referred to as "IEC Publication(s)"). Their preparation is entrusted to technical committees; any IEC National Committee interested in the subject dealt with may participate in this preparatory work. International, governmental and non-governmental organizations liaising with the IEC also participate in this preparation. IEC collaborates closely with the International Organization for Standardization (ISO) in accordance with conditions determined by agreement between the two organizations.

2) The formal decisions or agreements of IEC on technical matters express, as nearly as possible, an international consensus of opinion on the relevant subjects since each technical committee has representation from all interested IEC National Committees.

3) IEC Publications have the form of recommendations for international use and are accepted by IEC National Committees in that sense. While all reasonable efforts are made to ensure that the technical content of IEC Publications is accurate, IEC cannot be held responsible for the way in which they are used or for any misinterpretation by any end user.

4) In order to promote international uniformity, IEC National Committees undertake to apply IEC Publications transparently to the maximum extent possible in their national and regional publications. Any divergence between any IEC Publication and the corresponding national or regional publication shall be clearly indicated in the latter.

5) IEC itself does not provide any attestation of conformity. Independent certification bodies provide conformity assessment services and, in some areas, access to IEC marks of conformity. IEC is not responsible for any services carried out by independent certification bodies.

6) All users should ensure that they have the latest edition of this publication.

7) No liability shall attach to IEC or its directors, employees, servants or agents including individual experts and members of its technical committees and IEC National Committees for any personal injury, property damage or other damage of any nature whatsoever, whether direct or indirect, or for costs (including legal fees) and expenses arising out of the publication, use of, or reliance upon, this IEC Publication or any other IEC Publications.

8) Attention is drawn to the Normative references cited in this publication. Use of the referenced publications is indispensable for the correct application of this publication.

9) Attention is drawn to the possibility that some of the elements of this IEC Publication may be the subject of patent rights. IEC shall not be held responsible for identifying any or all such patent rights.

International Standard IEC 60086-3 has been prepared by IEC technical committee 35: Primary cells and batteries, and ISO technical committee 114: Horology.

This fifth edition cancels and replaces the fourth edition published in 2016. This edition constitutes a technical revision.

This edition includes the following significant technical changes with respect to the previous edition:

a) reformatted Table 1 and Table 2. The reformatted tables are now divided by system. Dimensional tolerances were changed when appropriate. Cell sizes were removed or added based on the size prevalence in the market place;

b) in Table 3 the minimum values of l_1 were reformatted;

c) the minimum OCV for the S system in Table 5 was changed to 1,55 V.

IECNORM.COM : Click to view the full PDF of IEC 60086-3:2021 RLV

The text of this International Standard is based on the following documents:

FDIS	Report on voting
35/1467/FDIS	35/1470/RVD

Full information on the voting for the approval of this International Standard can be found in the report on voting indicated in the above table.

The language used for the development of this International Standard is English.

This document was drafted in accordance with ISO/IEC Directives, Part 2, and developed in accordance with ISO/IEC Directives, Part 1 and ISO/IEC Directives, IEC Supplement, available at www.iec.ch/members_experts/refdocs. The main document types developed by IEC are described in greater detail at www.iec.ch/standardsdev/publications.

A list of all parts in the IEC 60086 series, published under the general title *Primary batteries*, can be found on the IEC website.

The committee has decided that the contents of this document will remain unchanged until the stability date indicated on the IEC website under "http://webstore.iec.ch" in the data related to the specific document. At this date, the document will be

- reconfirmed,
- withdrawn,
- replaced by a revised edition, or
- amended.

IECNORM.COM : Click to view the full PDF of IEC 60086-3:2021 RLV

INTRODUCTION

This part of IEC 60086 provides specific requirements and information for primary watch batteries. This part of IEC 60086 was prepared through joint work between the IEC and ISO to benefit primary battery users, watch designers and battery manufacturers by ensuring the best compatibility between batteries and watches.

This part of IEC 60086 will remain under continual scrutiny to ensure that the publication is kept up to date with the advances in both battery and watch technologies.

NOTE Safety information is available in IEC 60086-4 and IEC 60086-5.

IECNORM.COM : Click to view the full PDF of IEC 60086-3:2021 RLV

PRIMARY BATTERIES –

Part 3: Watch batteries

1 Scope

This part of IEC 60086 specifies dimensions, designation, methods of tests and requirements for primary batteries for watches. In several cases, a menu of test methods is given. When presenting battery electrical characteristics and/or performance data, the manufacturer specifies which test method was used.

2 Normative references

The following documents are referred to in the text in such a way that some or all of their content constitutes requirements of this document. For dated references, only the edition cited applies. For undated references, the latest edition of the referenced document (including any amendments) applies.

IEC 60086-1, *Primary batteries – Part 1: General*

IEC 60086-2, *Primary batteries – Part 2: Physical and electrical specifications*

IEC 60086-4, *Primary batteries – Part 4: Safety of lithium batteries*

IEC 60086-5, *Primary batteries – Part 5: Safety of batteries with aqueous electrolyte*

3 Terms and definitions

For the purposes of this document, the terms and definitions given in IEC 60086-1 and the following apply.

ISO and IEC maintain terminological databases for use in standardization at the following addresses:

- IEC Electropedia: available at http://www.electropedia.org/
- ISO Online browsing platform: available at http://www.iso.org/obp

3.1
capacitive reactance
part of the internal resistance that leads to a voltage drop during the first seconds under load

3.2
capacity
electric charge (quantity of electricity) which a cell or battery can deliver under specified discharge conditions

Note 1 to entry: The SI unit for electric charge is the coulomb (1 C = 1 As) but, in practice, capacity is usually expressed in ampere hours (Ah).

3.3
fresh battery
undischarged battery 60 days maximum after date of manufacture

IECNORM.COM : Click to view the full PDF of IEC 60086-3:2021 RLV

3.4
ohmic drop
part of the internal resistance that leads to a voltage drop immediately after switching the load on

4 Physical requirements

4.1 Battery dimensions, symbols and size codes

Dimensions and tolerances of batteries for watches shall be in accordance with Figure 1, Table 1 and Table 2. The dimensions of the batteries shall be tested in accordance with 7.1.

The symbols used to denote the various dimensions in Figure 1 are in accordance with IEC 60086-2:2021, Clause 4.

Dimensions in millimetres

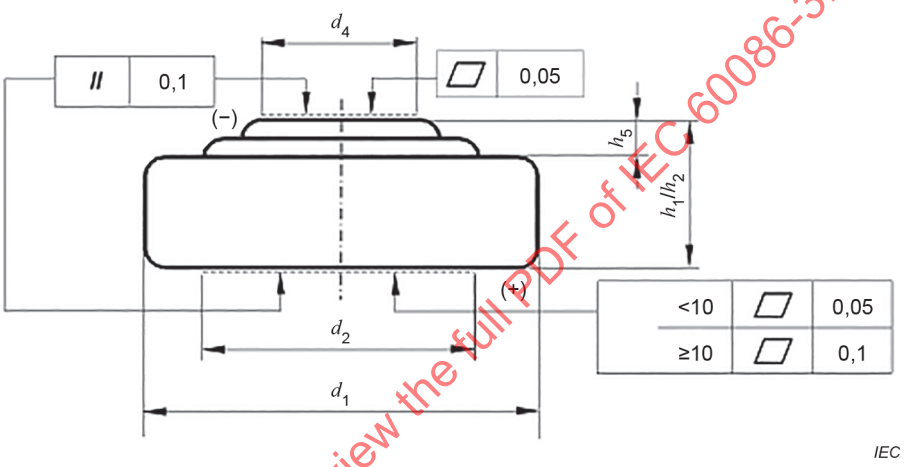

Key

h_1 maximum overall height of the battery

h_2 minimum distance between the flats of the positive and negative contacts

h_5 minimum projection of the flat negative contact

d_1 maximum and minimum diameter of the battery

d_2 minimum diameter of the flat positive contact

d_4 minimum diameter of the flat negative contact

NOTE This numbering follows the harmonization in the IEC 60086 series.

Figure 1 – Dimensional drawing

IECNORM.COM : Click to view the full PDF of IEC 60086-3:2021 RLV

Table 1 – Zinc systems L and S dimensions and size codes

Dimensions in millimetres

Diameter			d_4	Height h_1/h_2												
				Code[a]												
Code[a]	d_1	Tolerance		10	12	14	16	20	21	26	27	30	31	36	42	54
				Tolerances												
				0 −0,10	0 −0,15	0 −0,15	0 −0,18	0 −0,20	0 −0,20	0 −0,20	0 −0,20	0 −0,20	0 −0,25	0 −0,25	0 −0,25	0 −0,25
4	4,8	0 −0,15		1,05			1,65		2,15							
5	5,8	0 −0,15	2,6	1,05	1,25		1,65		2,15		2,70					
6	6,8	0 −0,15	3,0			1,45	1,65		2,15	2,60						
7	7,9	0 −0,15	3,5		1,25	1,45	1,65		2,10	2,60			3,10	3,60		5,40
9	9,5	0 −0,15	4,5	1,05	1,25	1,45	1,65	2,05			2,70			3,60		
11	11,6	0 −0,20	6,0				1,65	2,05				3,05		3,60	4,20	5,40

NOTE Open boxes in the above matrix are not necessarily available for standardization due to the concept of overlapping tolerances.

[a] See Annex A.

IECNORM.COM : Click to view the full PDF of IEC 60086-3:2021 RLV

Table 2 – Lithium systems B and C dimensions and size codes

Dimensions in millimetres

Diameter			d_4	Height h_1/h_2						
				Code[a]						
Code[a]	d_1	Tolerance		12	16	20	25	30	32	50
				Tolerances						
				0 −0,15	0 −0,18	0 −0,20	0 −0,20	0 −0,20	0 −0,25	0 −0,30
10	10,0	0 −0,15	3,0				2,50			
12	12,5	0 −0,25	4,0		1,60	2,00	2,50			
16	16	0 −0,25	5,0	1,20	1,60	2,00			3,20	
20	20	0 −0,25	8,0	1,20	1,60		2,50		3,20	
23	23	0 −0,25	8,0			2,00	2,50			
24	24,5	0 −0,25	8,0					3,00		5,00

NOTE Open boxes in the above matrix are not necessarily available for standardization due to the concept of overlapping tolerances.

[a] See Annex A.

IECNORM.COM : Click to view the full PDF of IEC 60086-3:2021 RLV

4.2 Terminals

Negative contact (–): The negative contact (dimension d_4) shall be in accordance with Table 1 and Table 2. This is not applied to those batteries with a two-step negative contact.

Positive contact (+): The cylindrical surface is connected to the positive terminal. Positive contact should be made to the side of the battery but may be made to the base.

4.3 Projection of the negative terminal (h_5)

The dimension h_5 shall be as follows:

$h_5 \geq 0{,}02$ for $h_1/h_2 \leq 1{,}65$

$h_5 \geq 0{,}06$ for $1{,}65 < h_1/h_2 < 2{,}5$

$h_5 \geq 0{,}08$ for $h_1/h_2 \geq 2{,}5$

The negative contact should be the highest point of the battery.

4.4 Shape of battery

The space requirements shall secure the area enclosed by an angle of 45° (see Figure 2).

The values of l_1, for different heights of h_1/h_2, are given in Table 3.

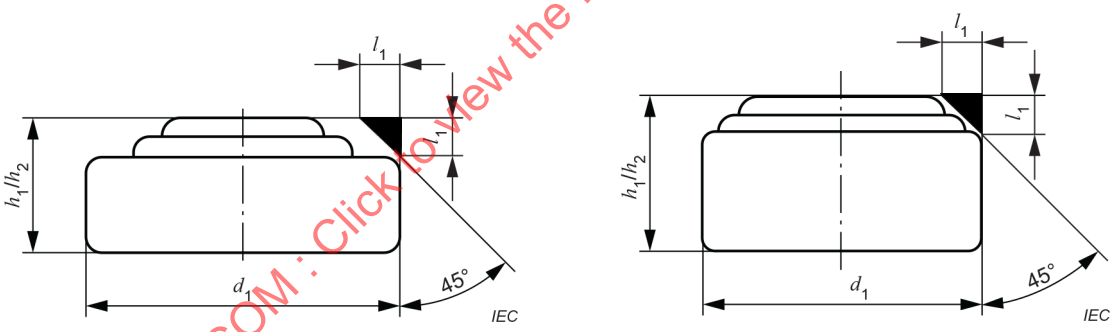

a) Figure 2a b) Figure 2b

Figure 2 – Shape of battery

Table 3 – Values of l_1

Dimensions in millimetres

h_1/h_2	l_1
$1 < h_1/h_2 \leq 1{,}90$	0,20
$1{,}90 < h_1/h_2 \leq 3{,}10$	0,35
$3{,}10 < h_1/h_2 \leq 3{,}60$	0,50
$3{,}60 < h_1/h_2 \leq 4{,}20$	0,70
$4{,}20 < h_1/h_2 \leq 5.40$	0,80
$5{,}40 < h_1/h_2$	0,90

IECNORM.COM : Click to view the full PDF of IEC 60086-3:2021 RLV

4.5 Mechanical resistance to pressure

A force F (N), as specified in Table 4, applied for 10 s through a steel ball of 1 mm diameter, at the centre of each contact area, shall not cause any deformation prejudicial to the proper functioning of the battery, i.e. after this test, the battery shall pass the tests specified in Clause 7.

Table 4 – Applied force F by battery dimensions

Battery dimensions		Force
d_1 mm	h_1/h_2 mm	F N
< 7,9	<3,0	5
	≥3,0	10
≥ 7,9	<3,0	10
	≥3,0	10

4.6 Deformation

Refer to IEC 60086-1 for dimensional stability.

4.7 Leakage

Undischarged batteries and, if required, batteries tested according to 7.2.6 shall be examined as stated in 7.3. The acceptable number of defects shall be agreed between the manufacturer and the purchaser.

4.8 Marking

4.8.1 General

The battery and/or its packaging must be marked with the following:

a) designation according to normative Annex A, or common;

b) expiration of a recommended usage period or year and month or week of manufacture. The year and month or week of manufacture may be in code. The code is composed of the last digit of the year and of a number indicating the month. October, November and December should be represented by the letters O, Y and Z respectively;

EXAMPLE

91: January 2019;

9Y: November 2019.

c) polarity of the positive (+) terminal;

d) nominal voltage;

e) name or trade mark of the supplier;

f) cautionary advice;

g) caution for ingestion of batteries shall be given. Refer to IEC 60086-4:2019, 7.2 a) and 9.2, and IEC 60086-5:2016, 7.1 l) and 9.2, for details.

NOTE Examples of the common designations can be found in Annex D of IEC 60086-2:2015.

Battery marking should not impede electrical contact. The designation and the polarity shall be marked on the battery. All other markings may be given on the packing instead of the battery.

IECNORM.COM : Click to view the full PDF of IEC 60086-3:2021 RLV

4.8.2 Disposal

Marking of batteries with respect to the method of disposal shall be in accordance with local legal requirements.

5 Electrical requirements

5.1 Electrochemical system, nominal voltage, end-point voltage and open-circuit voltage

The requirements concerning the electrochemical system, the nominal voltage, the end-point voltage and the open-circuit voltage are given in Table 5.

Table 5 – Standardised electrochemical systems

Letter	Negative electrode	Electrolyte	Positive electrode	Nominal voltage (U_n) V	End-point voltage (EV) V	Open-circuit voltage (U_{OC} or OCV) V	
						Max.	Min.
B	Lithium (Li)	Organic electrolyte	Carbon monofluoride $(CF)_x$	3,0	2,0	3,70	3,00
C	Lithium (Li)	Organic electrolyte	Manganese dioxide (MnO_2)	3,0	2,0	3,70	3,00
L	Zinc (Zn)	Alkali metal hydroxide	Manganese dioxide (MnO_2)	1,5	1,0	1,68	1,50
S	Zinc (Zn)	Alkali metal hydroxide	Silver oxide (Ag_2O)	1,55	1,2	1,63	1,55

5.2 Closed circuit voltage U_{cc} (CCV), internal resistance and impedance

Closed circuit voltage and internal resistance shall be measured according to 7.2.

AC impedance should be measured with an LCR meter.

Limit values shall be agreed between the manufacturer and the purchaser.

5.3 Capacity

The capacity shall be agreed between the manufacturer and the purchaser on the basis of a continuous discharge test, according to 7.2.6.

5.4 Capacity retention

The capacity retention is the ratio between the capacities under the given discharge conditions measured on fresh batteries and a sample of the same lot stored during 365 days at (20 ± 2) °C and a relative humidity between (55 ± 20) %.

The ratio of capacity retention shall be agreed between the manufacturer and the purchaser. The minimum value should be at least 90 % for a period of 12 months. The capacity measurement is carried out according to 7.2.6.

For the purpose of verifying compliance with this document, conditional acceptance may be given after completion of the initial capacity tests.

IECNORM.COM : Click to view the full PDF of IEC 60086-3:2021 RLV

6 Sampling and quality assurance

The use of sampling plans or product quality indices should be agreed between manufacturer and purchaser.

Where no agreement is specified, refer to ISO 2859 and ISO 21747 for sampling and quality compliance assessment advice.

7 Test methods

7.1 Shape and dimensions

7.1.1 Shape requirement

The shape of the negative contact is checked preferably by optical projection or by an open gauge according to Figure 3.

The measurement method shall be agreed between the manufacturer and the purchaser.

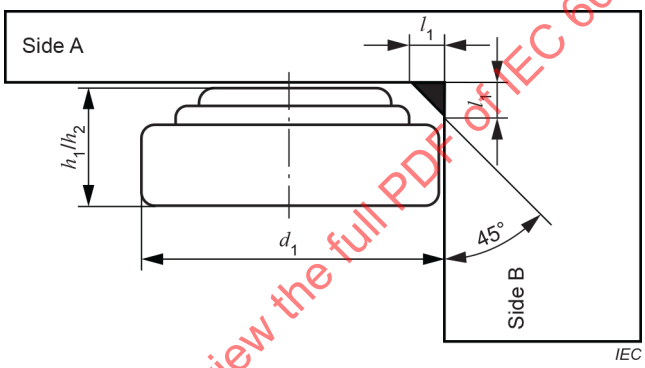

Figure 3 – Shape requirement

Procedure:
The procedure to inspect with the open gauge is shown. The battery is moved toward the side A of the gauge while applying the outer periphery of the positive electrode to the side B and maintaining the flat part of the negative electrode terminal at 90 ° with respect to the side B. A battery having a gap without contact between the side A of the gauge and the flat part of the negative electrode terminal does not satisfy the requirements.

NOTE The surface of the open gauge is made of non-conductive hard resin to prevent external short circuit.

7.2 Electrical characteristics

7.2.1 Environmental conditions

Unless otherwise specified, the sample batteries shall be tested at a temperature of (20 ± 2) °C and a relative humidity between (55 $^{+20}_{-40}$) %.

During use, batteries can be exposed to low temperatures; it is therefore recommended to carry out complementary tests at (0 ± 2) °C and at (−10 ± 2) °C.

7.2.2 Equivalent circuit – Effective internal resistance – DC method

Resistance of any electrical component is determined by calculating the ratio between the voltage drop ΔU across this component and the range of current Δi passing through this component and causing the voltage drop $R = \Delta U / \Delta i$.

IECNORM.COM : Click to view the full PDF of IEC 60086-3:2021 RLV