IEC 60269-1

Edition 5.0 2024-08
REDLINE VERSION

INTERNATIONAL STANDARD

NORME INTERNATIONALE

colour inside

Low-voltage fuses – Part 1: General requirements

Fusibles basse tension – Partie 1: Exigences générales

IECNORM.COM : Click to view the full PDF of IEC 60269-1:2024 RLV

THIS PUBLICATION IS COPYRIGHT PROTECTED
Copyright © 2024 IEC, Geneva, Switzerland

All rights reserved. Unless otherwise specified, no part of this publication may be reproduced or utilized in any form or by any means, electronic or mechanical, including photocopying and microfilm, without permission in writing from either IEC or IEC's member National Committee in the country of the requester. If you have any questions about IEC copyright or have an enquiry about obtaining additional rights to this publication, please contact the address below or your local IEC member National Committee for further information.

Droits de reproduction réservés. Sauf indication contraire, aucune partie de cette publication ne peut être reproduite ni utilisée sous quelque forme que ce soit et par aucun procédé, électronique ou mécanique, y compris la photocopie et les microfilms, sans l'accord écrit de l'IEC ou du Comité national de l'IEC du pays du demandeur. Si vous avez des questions sur le copyright de l'IEC ou si vous désirez obtenir des droits supplémentaires sur cette publication, utilisez les coordonnées ci-après ou contactez le Comité national de l'IEC de votre pays de résidence.

IEC Secretariat
3, rue de Varembé
CH-1211 Geneva 20
Switzerland

Tel.: +41 22 919 02 11
info@iec.ch
www.iec.ch

IECNORM.COM : Click to view the full PDF of IEC 60269-1:2024 RLV

About the IEC
The International Electrotechnical Commission (IEC) is the leading global organization that prepares and publishes International Standards for all electrical, electronic and related technologies.

About IEC publications
The technical content of IEC publications is kept under constant review by the IEC. Please make sure that you have the latest edition, a corrigendum or an amendment might have been published.

IEC publications search - webstore.iec.ch/advsearchform
The advanced search enables to find IEC publications by a variety of criteria (reference number, text, technical committee, …). It also gives information on projects, replaced and withdrawn publications.

IEC Just Published - webstore.iec.ch/justpublished
Stay up to date on all new IEC publications. Just Published details all new publications released. Available online and once a month by email.

IEC Customer Service Centre - webstore.iec.ch/csc
If you wish to give us your feedback on this publication or need further assistance, please contact the Customer Service Centre: sales@iec.ch.

IEC Products & Services Portal - products.iec.ch
Discover our powerful search engine and read freely all the publications previews, graphical symbols and the glossary. With a subscription you will always have access to up to date content tailored to your needs.

Electropedia - www.electropedia.org
The world's leading online dictionary on electrotechnology, containing more than 22 500 terminological entries in English and French, with equivalent terms in 25 additional languages. Also known as the International Electrotechnical Vocabulary (IEV) online.

A propos de l'IEC
La Commission Electrotechnique Internationale (IEC) est la première organisation mondiale qui élabore et publie des Normes internationales pour tout ce qui a trait à l'électricité, à l'électronique et aux technologies apparentées.

A propos des publications IEC
Le contenu technique des publications IEC est constamment revu. Veuillez vous assurer que vous possédez l'édition la plus récente, un corrigendum ou amendement peut avoir été publié.

Recherche de publications IEC - webstore.iec.ch/advsearchform
La recherche avancée permet de trouver des publications IEC en utilisant différents critères (numéro de référence, texte, comité d'études, …). Elle donne aussi des informations sur les projets et les publications remplacées ou retirées.

IEC Just Published - webstore.iec.ch/justpublished
Restez informé sur les nouvelles publications IEC. Just Published détaille les nouvelles publications parues. Disponible en ligne et une fois par mois par email.

Service Clients - webstore.iec.ch/csc
Si vous désirez nous donner des commentaires sur cette publication ou si vous avez des questions contactez-nous: sales@iec.ch.

IEC Products & Services Portal - products.iec.ch
Découvrez notre puissant moteur de recherche et consultez gratuitement tous les aperçus des publications, symboles graphiques et le glossaire. Avec un abonnement, vous aurez toujours accès à un contenu à jour adapté à vos besoins.

Electropedia - www.electropedia.org
Le premier dictionnaire d'électrotechnologie en ligne au monde, avec plus de 22 500 articles terminologiques en anglais et en français, ainsi que les termes équivalents dans 25 langues additionnelles. Egalement appelé Vocabulaire Electrotechnique International (IEV) en ligne.

IEC 60269-1

Edition 5.0 2024-08
REDLINE VERSION

INTERNATIONAL STANDARD

NORME INTERNATIONALE

colour inside

IECNORM.COM : Click to view the full PDF of IEC 60269-1:2024 RLV

Low-voltage fuses – Part 1: General requirements

Fusibles basse tension – Partie 1: Exigences générales

INTERNATIONAL ELECTROTECHNICAL COMMISSION

COMMISSION ELECTROTECHNIQUE INTERNATIONALE

ICS 29.120.50

ISBN 978-2-8322-9550-2

Warning! Make sure that you obtained this publication from an authorized distributor.
Attention! Veuillez vous assurer que vous avez obtenu cette publication via un distributeur agréé.

® Registered trademark of the International Electrotechnical Commission
Marque déposée de la Commission Electrotechnique Internationale

CONTENTS

FOREWORD 7
~~INTRODUCTION ..... ~~
~~1 General ..... ~~
1 Scope ~~and object~~ 11
2 Normative references 11
3 Terms and definitions 13
3.1 Fuses and their component parts 13
3.2 General terms 15
3.3 Characteristic quantities 17
4 Conditions for operation in service 21
4.1 General 21
4.2 Ambient air temperature (T_a) 21
4.3 Altitude 22
4.4 Atmospheric conditions 22
4.5 Voltage 22
4.6 Current 22
4.7 Frequency, power factor and time constant 22
4.7.1 Frequency 22
4.7.2 Power factor 22
4.7.3 Time constant (τ) 22
4.8 Conditions of installation 23
4.9 Utilization ~~category~~ class 23
4.10 ~~Discrimination~~ Selectivity of fuse-links 23
5 Classification 23
6 Characteristics of fuses 23
6.1 Summary of characteristics 23
6.1.1 General 23
6.1.2 Fuse-holders 23
6.1.3 Fuse-links 23
6.1.4 Complete fuses 24
6.2 Rated voltage 24
6.3 Rated current 24
6.3.1 Rated current of the fuse-link 25
6.3.2 Rated current of the fuse-holder 25
6.4 Rated frequency (see 7.1 and 7.2) 25
6.5 Rated power dissipation of a fuse-link and rated acceptable power dissipation of a fuse-holder. 26
6.6 Limits of time-current characteristics 26
6.6.1 General 26
6.6.2 Time-current characteristics, time-current zones 26
6.6.3 Conventional times and currents 26
6.6.4 Gates 27
6.7 Breaking range and breaking capacity 28
6.7.1 Breaking range and utilization category 28
6.7.2 Rated breaking capacity 29
6.8 Cut-off current and I^2t characteristics 29

IECNORM.COM : Click to view the full PDF of IEC 60269-1:2024 RLV

6.8.1 General ... 29
6.8.2 Cut-off current characteristics ... 29
6.8.3 I^2t characteristics ... 29
7 Markings ... 29
7.1 General ... 29
7.2 Markings of fuse-holders ... 29
7.3 Markings of fuse-links ... 30
8 Standard conditions for construction ... 30
8.1 Mechanical design ... 30
8.1.1 Replacement of fuse-links ... 30
8.1.2 Connections, including terminals ... 31
8.1.3 Fuse-contacts ... 31
8.1.4 Construction of a gauge-piece ... 31
8.1.5 Mechanical strength of the fuse-link ... 31
8.2 Insulating properties and suitability for isolation ... 31
8.3 Temperature rise, power dissipation of the fuse-link and acceptable power dissipation of a fuse-holder ... 32
8.4 Operation ... 33
8.5 Breaking capacity ... 34
8.6 Cut-off current characteristic ... 34
8.7 I^2t characteristics ... 34
8.8 Overcurrent selectivity of fuse-links ... 35
8.9 Protection against electric shock ... 35
8.9.1 General ... 35
8.9.2 Clearances and creepage distances ... 36
8.9.3 Leakage currents of fuses suitable for isolation ... 37
8.9.4 Additional constructional requirements for ~~fuses~~ fuse holders for linked fuse-carriers, suitable for isolation ... 37
8.10 Resistance to heat ... 37
8.11 Mechanical strength ... 38
8.12 Resistance to corrosion ... 38
8.12.1 General ... 38
8.12.2 Resistance to rusting ... 38
8.12.3 Resistance to season cracking ... 38
8.13 Resistance to abnormal heat and fire ... 38
8.14 Electromagnetic compatibility ... 38
9 Tests ... 38
9.1 Overview ... 38
9.1.1 General ... 38
9.1.2 Kind of tests ... 38
9.1.3 Ambient air temperature (T_a) ... 39
9.1.4 Condition of the fuse ... 39
9.1.5 Arrangement of the fuse and dimensions ... 39
9.1.6 Testing of fuse-links ... 39
9.1.7 Testing of fuse-holders ... 43
9.2 Verification of the insulating properties and of the suitability for isolation ... 44
9.2.1 Arrangement of the fuse-holder ... 44
9.2.2 Verification of the insulating properties ... 44

IECNORM.COM : Click to view the full PDF of IEC 60269-1:2024 RLV

9.2.3 Verification of the suitability for isolation 45
9.2.4 Acceptability of test results 46
9.3 Verification of temperature rise and power dissipation 46
9.3.1 Arrangement of the fuse 46
9.3.2 Measurement of the temperature rise 47
9.3.3 Measurement of the power dissipation of the fuse-link 47
9.3.4 Test method 47
9.3.5 Acceptability of test results 49
9.4 Verification of operation 49
9.4.1 Arrangement of the fuse 49
9.4.2 Ambient air temperature 49
9.4.3 Test method and acceptability of test results 49
9.5 Verification of the breaking capacity 53
9.5.1 Arrangement of the fuse 53
9.5.2 Characteristics of the test circuit 53
9.5.3 Measuring instruments 54
9.5.4 Calibration of test circuit 54
9.5.5 Test method 56
9.5.6 Ambient air temperature 58
9.5.7 Interpretation of oscillograms 58
9.5.8 Acceptability of test results 58
9.6 Verification of the cut-off current characteristics 59
9.6.1 Test method 59
9.6.2 Acceptability of test results 59
9.7 Verification of I^2t characteristics and overcurrent selectivity 59
9.7.1 Test method 59
9.7.2 Acceptability of test results 59
9.7.3 Verification of compliance for fuse-links at 0,01 s 59
9.7.4 Verification of overcurrent selectivity 60
9.8 Verification of the degree of protection of enclosures 60
9.9 Verification of resistance to heat 60
9.10 Verification of non-deterioration of contacts 60
9.10.1 General 60
9.10.2 Arrangement of the fuse 60
9.10.3 Test method 60
9.10.4 Acceptability of test results 60
9.11 Mechanical and miscellaneous tests 61
9.11.1 Mechanical strength 61
9.11.2 Miscellaneous tests 61
9.12 Test of durability of markings 64
Annex A (informative) Measurement of short-circuit power factor 74
Annex B (informative) Calculation of pre-arcing I^2t values for "gG", "gM"~~, "gD"~~ and ~~"gN"~~ "gU" fuse-links and calculation of operating I^2t values at reduced voltage 77
B.1 Evaluation of the pre-arcing I^2t value at 0,01 s 77
B.2 Calculation of the value of pre-arcing I^2t under the conditions of test no. 2 77
B.3 Calculation of the value of operating I^2t at reduced voltage 78
Annex C (informative) Calculation of cut-off current-time characteristic 79
C.1 Overview 79

IECNORM.COM : Click to view the full PDF of IEC 60269-1:2024 RLV

C.2 Preliminary note 79
C.3 Definition 79
C.4 Characteristic 80
C.5 Test condition 80
C.6 Calculation from the measured values 80
Annex D (informative) Effect of change of ambient temperature and surroundings on the performance of fuse-links 83
D.1 Effect of increase of ambient temperature 83
D.1.1 On current rating 83
D.1.2 On temperature rise 83
D.1.3 On conventional fusing and non-fusing current (I_f and I_{nf}) 83
D.1.4 For motor starting conditions 83
D.2 Effect of decrease of ambient air temperature 83
D.3 Effect of installation conditions 83
Annex E (normative) Particular requirements for fuse-bases with screwless-type terminals for external copper conductors 84
E.1 ~~Scope~~ General 84
E.3 Terms and definitions 84
E.7 Marking 85
E.8 Standard conditions for construction 85
E.8.1 Fixed connections including terminals 85
E.8.2 Dimensions of connectable conductors 85
E.8.3 Connectable cross-sectional areas 86
E.8.4 Insertion and disconnecting of conductors 86
E.8.5 Design and construction of terminals 86
E.8.6 Resistance to ageing 87
E.9 Tests 87
E.9.1 Test of reliability of terminals 87
E.9.2 Tests of reliability of terminals for external conductors: mechanical strength 87
E.9.3 Cycling test 88
Bibliography 91

Figure 1 – Diagram illustrating the means of verification of the time-current characteristic, using the results of the tests at the "gate" currents (example) 65
Figure 2 – Overload curve and time-current characteristic for "a" fuse-links 66
Figure 3 – Time-current zone for aM fuses 67
Figure 4 – General presentation of the cut-off characteristics for a series of AC fuse-links 68
Figure 5 – Typical diagram of the circuit used for breaking capacity test (see 9.5) 69
Figure 6 – Interpretation of oscillograms taken during the AC breaking-capacity tests (see 9.5.7) 70
Figure 7 – Interpretation of oscillograms taken during the DC breaking-capacity tests (see 9.5.7) 71
Figure 8 – Glow-wire and position of the thermocouple 72
Figure 9 – Test apparatus (example) 73
Figure A.1 – Determination of circuit-impedance for calculation of power factor in accordance with method I 76

IECNORM.COM : Click to view the full PDF of IEC 60269-1:2024 RLV

Figure C.1 – Cut-off current characteristic as a function of actual pre-arcing time 82
Figure E.1 – Connecting samples 89
Figure E.2 – Examples of terminals 90

Table 1 – Standard values of AC rated voltages for fuses 24
~~Table 22 – Preferred values of d.c. rated voltages for fuses ....~~
Table 2 – Preferred values of DC rated voltages for fuses 25
Table 3 – Conventional time and current for "gG", ~~"gK"~~ and "gM" fuse-links 27
Table 4 – Gates for specified pre-arcing times of "gG"~~, "gK"~~ and "gM" fuse-links[a] 27
Table 5 – Gates for "aM ' fuse-links (all rated currents) 28
Table 6 – Temperature rise limits $\Delta T = (T - T_a)$ for ~~contacts and~~ terminals 32
Table 7 – Maximum arc voltage 34
Table 8 – Pre-arcing I^2t values at 0,01 s for "gG" and "gM" fuse-links 35
Table 9 – Rated impulse withstand voltage 36
Table 10 – Minimum clearances in air 36
Table 11 – Minimum creepage distances 36
Table 12 – Survey of complete tests on fuse-links and number of fuse-links to be tested 41
Table 13 – Survey of tests on fuse-links of smallest rated current of homogeneous series and number of fuse-links to be tested 42
Table 14 – Survey of tests on fuse-links of rated currents between the largest and the smallest rated current of a homogeneous series and number of fuse-links to be tested 43
Table 15 – Survey of complete tests on fuse-holders and number of fuse-holders to be tested 43
Table 16 – Test voltage 45
Table 17 – Test voltage across the poles for the verification of the suitability for isolation 46
Table 18 – Cross-sectional area of copper conductors for tests corresponding to Subclauses 9.3 and 9.4 48
Table 19 – Cross-section areas of the copper conductors for the test of "aM" fuses 51
Table 20 – Table for test in Subclause 9.4.3.5 52
Table 21 – Values for breaking-capacity tests on AC fuses 55
Table 22 – Values for breaking-capacity tests on DC fuses 56
Table E.1 – Connectable conductors 86
Table E.2 – Cross-sections of copper conductors connectable to terminals 86
Table E.3 – Pull forces 88

IECNORM.COM : Click to view the full PDF of IEC 60269-1:2024 RLV

INTERNATIONAL ELECTROTECHNICAL COMMISSION

LOW-VOLTAGE FUSES –

Part 1: General requirements

FOREWORD

1) The International Electrotechnical Commission (IEC) is a worldwide organization for standardization comprising all national electrotechnical committees (IEC National Committees). The object of IEC is to promote international co-operation on all questions concerning standardization in the electrical and electronic fields. To this end and in addition to other activities, IEC publishes International Standards, Technical Specifications, Technical Reports, Publicly Available Specifications (PAS) and Guides (hereafter referred to as "IEC Publication(s)"). Their preparation is entrusted to technical committees; any IEC National Committee interested in the subject dealt with may participate in this preparatory work. International, governmental and non-governmental organizations liaising with the IEC also participate in this preparation. IEC collaborates closely with the International Organization for Standardization (ISO) in accordance with conditions determined by agreement between the two organizations.

2) The formal decisions or agreements of IEC on technical matters express, as nearly as possible, an international consensus of opinion on the relevant subjects since each technical committee has representation from all interested IEC National Committees.

3) IEC Publications have the form of recommendations for international use and are accepted by IEC National Committees in that sense. While all reasonable efforts are made to ensure that the technical content of IEC Publications is accurate, IEC cannot be held responsible for the way in which they are used or for any misinterpretation by any end user.

4) In order to promote international uniformity, IEC National Committees undertake to apply IEC Publications transparently to the maximum extent possible in their national and regional publications. Any divergence between any IEC Publication and the corresponding national or regional publication shall be clearly indicated in the latter.

5) IEC itself does not provide any attestation of conformity. Independent certification bodies provide conformity assessment services and, in some areas, access to IEC marks of conformity. IEC is not responsible for any services carried out by independent certification bodies.

6) All users should ensure that they have the latest edition of this publication.

7) No liability shall attach to IEC or its directors, employees, servants or agents including individual experts and members of its technical committees and IEC National Committees for any personal injury, property damage or other damage of any nature whatsoever, whether direct or indirect, or for costs (including legal fees) and expenses arising out of the publication, use of, or reliance upon, this IEC Publication or any other IEC Publications.

8) Attention is drawn to the Normative references cited in this publication. Use of the referenced publications is indispensable for the correct application of this publication.

9) IEC draws attention to the possibility that the implementation of this document may involve the use of (a) patent(s). IEC takes no position concerning the evidence, validity or applicability of any claimed patent rights in respect thereof. As of the date of publication of this document, IEC had not received notice of (a) patent(s), which may be required to implement this document. However, implementers are cautioned that this may not represent the latest information, which may be obtained from the patent database available at https://patents.iec.ch. IEC shall not be held responsible for identifying any or all such patent rights.

This redline version of the official IEC Standard allows the user to identify the changes made to the previous edition IEC 60269-1:2006+AMD1:2009+AMD2:2014 CSV. A vertical bar appears in the margin wherever a change has been made. Additions are in green text, deletions are in strikethrough red text.

IECNORM.COM : Click to view the full PDF of IEC 60269-1:2024 RLV

IEC 60269-1 has been prepared by subcommittee 32B: Low-voltage fuses, of IEC technical committee 32: Fuses. It is an International Standard.

This fifth edition cancels and replaces the fourth edition published in 2006, Amendment 1:2009 and Amendment 2:2014. This edition constitutes a technical revision.

This edition includes the following significant technical changes with respect to the previous edition:

a) New numbering, editorial corrections and normative references updated;
b) Term "discrimination" replaced by "selectivity" and "utilization category" by "utilization class";
c) Term "fuses for authorized and unskilled persons" updated;
d) Replacement of fuse-link added;
e) Standard values for AC and DC voltages updated;
f) Rated currents 425A, 355A, and 1 600A added;
g) Marking: requirements and tests separated to the relevant subclauses;
h) Requirements for temperature rise limited to terminal temperature rise only;
i) Graphic symbol for fuse-base updated,

The text of this International Standard is based on the following documents:

Draft	Report on voting
32B/748/FDIS	32B/756/RVD

Full information on the voting for its approval can be found in the report on voting indicated in the above table.

The language used for the development of this International Standard is English.

This document was drafted in accordance with ISO/IEC Directives, Part 2, and developed in accordance with ISO/IEC Directives, Part 1 and ISO/IEC Directives, IEC Supplement, available at www.iec.ch/members_experts/refdocs. The main document types developed by IEC are described in greater detail at www.iec.ch/publications.

IEC 60269 consists of the following parts, under the general title *Low-voltage fuses*:

Part 1: General requirements

Part 2: Supplementary requirements for fuses for use by authorized persons (fuses mainly for industrial application) – Examples of standardized systems of fuses A to I

Part 3: Supplementary requirements for fuses for use by unskilled persons (fuses mainly for household or similar application) – Examples of standardized systems of fuses A to F

Part 4: Supplementary requirements for fuse-links for the protection of semiconductor devices

Part 5: Guidance for the application of low-voltage fuses

Part 6: Supplementary requirements for fuse-links for the protection of solar photovoltaic energy systems

Part 7: Battery Fuses

For reasons of convenience, when a part of this publication has come from other publications, a remark to this effect has been inserted in the text.

IECNORM.COM : Click to view the full PDF of IEC 60269-1:2024 RLV

The committee has decided that the contents of this document will remain unchanged until the stability date indicated on the IEC website under webstore.iec.ch in the data related to the specific document. At this date, the document will be

- reconfirmed,
- withdrawn, or
- revised.

IMPORTANT – The "colour inside" logo on the cover page of this document indicates that it contains colours which are considered to be useful for the correct understanding of its contents. Users should therefore print this document using a colour printer.

IECNORM.COM : Click to view the full PDF of IEC 60269-1:2024 RLV

~~INTRODUCTION~~

~~A reorganization of the different parts of the IEC 60269 series has been carried out, in order to simplify its use, especially by the laboratories which test the fuses.~~

~~IEC 60269-1, IEC 60269-2, IEC 60269-3 and IEC 60269-3-1 have been integrated into either the new part 1 or the new parts 2 or 3, according to the subjects considered, so that the clauses which deal exclusively with "fuses for authorized persons" are separated from the clauses dealing with "fuses for unauthorized persons".~~

~~As far as IEC 60269-4 and IEC 60269-4-1 are concerned, they have been integrated into the new part 4 which deals with the fuse-links used for semiconductor protection.~~

IECNORM.COM : Click to view the full PDF of IEC 60269-1:2024 RLV

LOW-VOLTAGE FUSES –

Part 1: General requirements

~~1 General~~

1 Scope ~~and object~~

This part of IEC 60269 is applicable to fuses incorporating enclosed current-limiting fuse-links with rated breaking capacities of not less than 6 kA, intended for protecting power-frequency AC circuits of nominal voltages not exceeding 1 000 V or DC circuits of nominal voltages not exceeding 1 500 V.

Subsequent parts of this standard, referred to herein, cover supplementary requirements for such fuses intended for specific conditions of use or applications.

Fuse-links intended to be included in fuse-switch combinations according to IEC 60947-3 should also comply with the following requirements.

As far as not stated in subsequent parts for fuse-links, details of performance (see 3.2.4) on DC circuits should be stated in the manufacturer's literature.

~~NOTE 1 For "a" fuse-links, details of performance (see 2.2.4) on d.c. circuits should be subject to agreement between user and manufacturer.~~

NOTE ~~2~~1 Modifications of, and supplements to, this document required for certain types of fuses for particular applications – for example, certain fuses for rolling stock, or fuses for high-frequency circuits – will be covered, if necessary, by separate standards.

NOTE ~~3~~2 This document does not apply to miniature fuses, these being covered by IEC 60127.

The object of this standard series is to establish the characteristics of fuses or parts of fuses (fuse-base, fuse-carrier, fuse-link) in such a way that they can be replaced by other fuses or parts of fuses having the same characteristics provided that they are interchangeable as far as their dimensions are concerned. For this purpose, this standard series refers in particular to

– the following characteristics of fuses:
  - rated values;
  - insulation;
  - temperature rise in normal service;
  - power dissipation and acceptable power dissipation;
  - time/current characteristics;
  - breaking capacity;
  - cut-off current characteristics and their I^2t characteristics.
– type test for verification of the characteristics of fuses;
– the marking of fuses.

2 Normative references

The following documents are referred to in the text in such a way that some or all of their content constitutes requirements of this document. For dated references, only the edition cited applies.

IECNORM.COM : Click to view the full PDF of IEC 60269-1:2024 RLV

For undated references, the latest edition of the referenced document (including any amendments) applies.

~~IEC 60038:1983, *IEC standard voltages*~~

~~IEC 60050(441):1984, *International Electrotechnical Vocabulary (IEV) – Chapter 441: Switchgear, controlgear and fuses*~~
~~Amendment 1 (2000)~~

~~IEC 60228:2004, *Conductors of insulated cables*~~

IEC 60269-2, *Low-voltage fuses – Part 2: Supplementary requirements for fuses for use by authorized persons (fuses mainly for industrial application) – Examples of standardized systems of fuses A to ~~I)~~ K*

~~IEC 60269-3, *Low-voltage fuses – Part 3: Supplementary requirements for fuses for use by unskilled persons (fuses mainly for household or similar application) – Examples of standardized systems of fuses A to F*~~

~~IEC 60269-4, *Low-voltage fuses – Part 4: Supplementary requirements for fuse-links for the protection of semiconductor devices*~~

~~IEC 60269-5, *Low-voltage fuses – Part 5: Guidance for the application of low-voltage fuses*~~

~~IEC 60269-6, *Low-voltage fuses – Part 6: Supplementary requirements for fuse-links for the protection of solar photovoltaic energy systems*~~

~~IEC 60364-3:1993, *Electrical installations of buildings – Part 3: Assessment of general characteristics*~~

~~IEC 60364-5-52:2001, *Electrical installations of buildings – Part 5-52: Selection and erection of electrical equipment – Wiring system*~~

IEC 60529~~:1989~~, *Degrees of protection provided by enclosures (IP Code)*

IEC 60584-1:~~1995~~2013, *Thermocouples – Part 1: ~~Reference tables~~ EMF specifications and tolerances*

IEC 60617, *Graphical symbols for diagrams*

IEC 60664-1:2002, *Insulation coordination for equipment within low-voltage supply systems – Part 1: Principles, requirements and tests*

~~IEC 60695-2-10, *Fire hazard testing – Part 2-10: Glowing/hot-wire based test methods – Glow-wire apparatus and common test procedure*~~

~~IEC 60695-2-11:2000, *Fire hazard testing – Part 2-11: Glowing/hot-wire based test methods – Glow-wire flammability test method for end-products*~~

~~IEC 60695-2-12:2000, *Fire hazard testing – Part 2-12: Glowing/hot-wire based test methods – Glow-wire flammability index (GWFI) test method for materials*~~

~~IEC 60695-2-13:2000, *Fire hazard testing – Part 2-13: Glowing/hot-wire based test methods – Glow-wire ignition temperature (GWIT) test method for materials*~~

~~ISO 3:1973, *Preferred numbers – Series of preferred numbers*~~

IECNORM.COM : Click to view the full PDF of IEC 60269-1:2024 RLV

~~ISO 478:1974, *Paper – Untrimmed stock sizes for the ISO-A series – ISO primary range*~~

~~ISO 593:1974, *Paper – Untrimmed stock size for the ISO-A series – ISO supplementary range*~~

~~ISO 4046:1978, *Paper, board, pulp and related terms – Vocabulary – Bilingual edition*~~

3 Terms and definitions

For the purposes of this document, the following terms and definitions apply.

ISO and IEC maintain terminological databases for use in standardization at the following addresses:

- IEC Electropedia: available at http://www.electropedia.org/
- ISO Online browsing platform: available at http://www.iso.org/obp

NOTE For general definitions concerning fuses, see also IEC 60050-441.

3.1 Fuses and their component parts

3.1.1
fuse
device that by the fusing of one or more of its specially designed and proportioned components opens the circuit in which it is inserted by breaking the current when this exceeds a given value for a sufficient time. The fuse comprises all the parts that form the complete device

[SOURCE: IEC 60050-441:1984, 441-18-01]

3.1.2
fuse-holder
combination of the fuse-base with its fuse-carrier

Note 1 to entry: Where, in this document, the term "fuse-holder" is used, it covers fuse-bases and/or fuse-carriers, if no clearer distinction is necessary.

[SOURCE: IEC 60050-441:1984, 441-18-14]

3.1.2.1
fuse-base (fuse-mount)
fixed part of a fuse provided with contacts and terminals

Note 1 to entry: Where applicable, covers are considered as part of the fuse-base.

[SOURCE: IEC 60050-441:1984, 441-18-02]

3.1.2.2
fuse-carrier
movable part of a fuse designed to carry a fuse-link

[SOURCE: IEC 60050-441:1984, 441-18-13]

3.1.3
fuse-link
part of a fuse including the fuse-element(s), intended to be replaced after the fuse has operated

[SOURCE: IEC 60050-441:1984, 441-18-09]

IECNORM.COM : Click to view the full PDF of IEC 60269-1:2024 RLV

3.1.4
fuse-contact
two or more conductive parts designed to ensure circuit continuity between a fuse-link and the corresponding fuse-holder

3.1.5
fuse-element
part of the fuse-link designed to melt under the action of current exceeding some definite value for a definite period of time

Note 1 to entry: The fuse-link may comprise several fuse-elements in parallel.

[SOURCE: IEC 60050-441:1984, 441-18-08]

3.1.6
indicating device (indicator)
part of a fuse provided to indicate whether the fuse has operated

[SOURCE: IEC 60050-441:1984, 441-18-17]

3.1.7
striker
mechanical device forming part of a fuse-link which, when the fuse operates, releases the energy required to cause operation of other apparatus or indicators or to provide interlocking

[SOURCE: IEC 60050-441:1984, 441-18-18]

3.1.8
terminal
conductive part of a fuse provided for electric connection to external circuits

Note 1 to entry: Terminals may be distinguished according to the kind of circuits for which they are intended (for example, main terminal, earth terminal, etc.) and also according to their design (for example, screw terminal, plug terminal, etc.).

3.1.9
dummy fuse-link
test fuse-link with defined power dissipation and dimensions

3.1.10
test rig
defined test fuse-base

3.1.11
gauge-piece
additional part of a fuse-base intended to achieve a degree of non-interchangeability

3.1.12
linked fuse-carrier
fuse-carrier which is mechanically linked to the fuse-base and gives a defined insertion and withdrawal movement to the fuse-link

~~[This definition was definition 2.1.12 in IEC 60269-2-1, Section I, which has been withdrawn.]~~

IECNORM.COM : Click to view the full PDF of IEC 60269-1:2024 RLV

3.2 General terms

3.2.1
enclosed fuse-link
fuse-link in which the fuse-element(s) is (are) totally enclosed, so that during operation within its rating it cannot produce any harmful external effects, for example, due to development of an arc, the release of gas or the ejection of flame or metallic particles

[SOURCE: IEC 60050-441:1984, 441-18-12]

3.2.2
current-limiting fuse-link
fuse-link that during and by its operation in a specified current range, limits the current to a substantially lower value than the peak value of the prospective current

[SOURCE: IEC 60050-441:1984, 441-18-10]

3.2.3
"g" fuse-link
<full-range breaking-capacity fuse-link, formerly general purpose fuse-link>
current-limiting fuse-link capable of breaking under specified conditions all currents, which cause melting of the fuse-element up to its rated breaking capacity

3.2.4
"a" fuse-link
<partial-range breaking-capacity fuse-link, formerly back-up fuse-link>
current-limiting fuse-link capable of breaking under specified conditions all currents between the lowest current indicated on its operating time-current characteristic ($k_2 I_n$ in Figure 2) and its rated breaking capacity

Note 1 to entry: "a" fuse-links are generally used to provide short-circuit protection. Where protection is required against over-currents less than $k_2 I_n$ in Figure 2, they are used in conjunction with another suitable switching device designed to interrupt such small overcurrents.

3.2.5
temperatures

3.2.5.1
ambient air temperature
T_a
temperature of the air surrounding the fuse (at a distance of about 1 m from the fuse or its enclosure, if any)

~~**2.2.5.2**~~
~~**fluid environment temperature**~~
~~T_e~~
~~temperature of the fluid cooling the fuse-components (contact, terminal, etc.). It is the sum of the ambient air temperature T_a and the temperature rise ΔT_e with respect to the ambient temperature of the internal fluid in contact with the fuse-components (contact, terminal, etc.) if the latter is in an enclosure. If it is not in an enclosure, it is assumed that T_e is equal to T_a~~

3.2.5.2
fuse-component temperature
T
<fuse-component (contact, terminal, etc.)>
temperature of the relevant part

IECNORM.COM : Click to view the full PDF of IEC 60269-1:2024 RLV

3.2.6
overcurrent ~~discrimination~~ selectivity
coordination of the relevant characteristics of two or more overcurrent protective devices such that, on the occurrence of overcurrents within stated limits, the device intended to operate within these limits does so, while the other(s) do(es) not

[SOURCE: IEC 60050-441:1984, 441-17-15, modified – "discrimination" replaced by "selectivity" in term, "operating" replaced by "relevant" and "incidence" replaced by "occurrence" in definition]

3.2.7
fuse system
family of fuses following the same physical design principles with respect to the shape of the fuse-links, type of contact, etc.

3.2.8
size
specified set of dimensions of fuses within a fuse system

Note 1 to entry: Each individual size covers a given range of rated currents for which the specified dimensions of the fuses remain unchanged.

3.2.9
homogeneous series of fuse-links
series of fuse-links, within a given size, deviating from each other only in such characteristics that for a given test, the testing of one or a reduced number of particular fuse-links of that series may be taken as representative for all the fuse-links of the homogeneous series

Note 1 to entry: The characteristics by which the fuse-links of a homogeneous series may deviate and details on which of the fuse-links shall be tested are specified in association with the tests concerned (see Table 12 and Table 13).

[SOURCE: IEC 60050-441:1984, 441-18-34, modified – Note 1 to entry replaced]

3.2.10
utilization ~~category~~ class (of a fuse-link)
combination of specified requirements related to the conditions in which the fuse-link fulfils its purpose, selected to represent a characteristic group of practical applications (see 6.7.1)

~~**2.2.11**~~
~~**fuses for use by authorized persons**~~
~~(formerly called fuses for industrial application)~~
~~fuses intended to be used in installations where the fuse-links are accessible to and intended to be replaced by authorized persons only~~

~~NOTE 1 Non-interchangeability and protection against accidental contact with live parts need not necessarily be ensured by constructional means.~~

~~NOTE 2 Authorized person is understood to have the meaning defined for categories BA 4 "instructed"[1] and BA 5 "skilled"[2] in IEC 60364-3.~~

~~[1] Instructed: Persons adequately advised or supervised by skilled persons to enable them to avoid dangers which electricity may create (operating and maintenance staff).~~

~~[2] Skilled: Persons with technical knowledge or sufficient experience to enable them to avoid dangers which electricity may create (engineers and technicians).~~

IECNORM.COM : Click to view the full PDF of IEC 60269-1:2024 RLV

~~**2.2.12**~~
~~**fuses for use by unskilled persons** (formerly called fuses for domestic and similar applications)~~
~~fuses intended to be used in installations where the fuse-links are accessible to, and can be replaced by, unskilled persons~~

~~NOTE For these fuses, protection against direct contact with live parts is recommended and non-interchangeability may be required, if necessary~~

3.2.11
fuses for use by authorized and unskilled persons
fuse systems divided into systems for use by authorized persons and for use by unskilled persons

Note 1 to entry: For safe replacement of fuses-links of systems used by authorized persons special skills are necessary.

Authorized person is understood to have the meaning defined for categories BA 4 "instructed" (IEC 60050-826:2022, 826-18-02) and BA 5 "skilled" (IEC 60050-826:2022, 826-18-01).

National regulations might supersede these definitions.

Instructed persons are persons adequately advised or supervised by skilled persons to enable them to avoid dangers which electricity may create (operating and maintenance staff).

Skilled persons have technical knowledge or sufficient experience to enable them to avoid dangers which electricity may create (engineers and technicians). For example, dangers for persons may come from touching live parts during operation and from replacing fuse-links under load.

Unskilled persons do not have technical knowledge or sufficient experience. To avoid dangers, which electricity may create, the relevant part of the fuse standard shall provide requirements for maximum safety in service. IEC 60269-3 provides four systems for use by unskilled persons.

3.2.12
replacement of a fuse link
exchange of a fuse-link

3.2.13
non-interchangeability
limitations on shape and/on dimensions with the object of avoiding in a specific fuse-base the inadvertent use of fuse-links having electrical properties other than those ensuring the desired degree of protection

[SOURCE: IEC 60050-441:1984, 441-18-33]

3.3 Characteristic quantities

3.3.1
rating
general term employed to designate the characteristic values that together define the working conditions upon which the tests are based and for which the equipment is designed

[SOURCE: IEC 60050-441:1984, 441-18-36]

Note 1 to entry: Rated values usually stated for low-voltage fuses are: voltage, current, breaking capacity, power dissipation and acceptable power dissipation, and frequency, where applicable. In the case of AC, rated voltage and rated current are stated as r.m.s. symmetrical values; in the case of DC, when ripple is present, the rated voltage is stated as a mean value, the rated current as an RMS value. The above applies to any value of voltage and current, if not indicated otherwise.

3.3.2
prospective current (of a circuit and with respect to a fuse)
current that would flow in the circuit if ~~each pole of~~ the fuse-link(s) ~~were~~ is(are) replaced by a conductor of negligible impedance

IECNORM.COM : Click to view the full PDF of IEC 60269-1:2024 RLV

Note 1 to entry: For AC, the prospective current is expressed by the RMS value of the AC component.

Note 2 to entry: The prospective current is the quantity to which the breaking capacity and characteristics of the fuse are normally referred, e.g. I^2t and cut-off current characteristics (see 9.5.7).

[SOURCE: IEC 60050-441:1984, 441-17-01, modified – "each pole of the switching device were" replaced by "the fuse-link(s) is", Note to entry replaced]

3.3.3
gates
limiting values within which the characteristics, for example time-current characteristics, are obtained.

3.3.4
breaking capacity of a fuse
value of prospective current that a fuse is capable of breaking at a stated voltage under prescribed conditions of use and behaviour

[SOURCE: IEC 60050-441:1984, 441-17-08, modified – "switching device" removed from term and definition, Note to entry removed]

3.3.5
breaking range
range of prospective currents within which the breaking capacity of a fuse-link is assured

3.3.6
cut-off current
maximum instantaneous value reached by the current during the breaking operation of a fuse-link when it operates in such a manner as to prevent the current from reaching the otherwise attainable maximum

3.3.7
cut-off current characteristic; let-through current characteristic
curve giving the cut-off current as a function of the prospective current under stated conditions of operation

Note 1 to entry: In the case of AC, the values of the cut-off currents are the maximum values which can be reached whatever the degree of asymmetry. In the case of DC, the values of the cut-off currents are the maximum values reached related to the time constants as specified.

[SOURCE: IEC 60050-441:1984, 441-17-14]

3.3.8
peak withstand current (of a fuse-holder)
value of cut-off current that the fuse-holder can withstand

Note 1 to entry: The peak withstand current is not less than the highest cut-off current of any fuse-link with which the fuseholder is intended to be associated.

3.3.9
pre-arcing time; melting time
interval of time between the beginning of a current large enough to cause a break in the fuse-element(s) and the instant when an arc is initiated

[SOURCE: IEC 60050-441:1984, 441-18-21]

3.3.10
arcing time of a fuse-link
interval of time between the instant of the initiation of the arc in a fuse and the instant of final arc extinction in ~~that~~ the same fuse-link

IECNORM.COM : Click to view the full PDF of IEC 60269-1:2024 RLV

[SOURCE: IEC 60050-441:1984, 441-17-37 modified – "pole" removed from term and definition]

3.3.11
operating time; total clearing time
sum of the pre-arcing time and the arcing time

[SOURCE: IEC 60050-441:1984, 441-18-22]

3.3.12
I^2t; Joule integral
integral of the square of the current over a given time interval:

$$I^2t = \int_{t_0}^{t_1} i^2 \mathrm{d}t$$

Note 1 to entry: The pre-arcing I^2t is the I^2t integral extended over the pre-arcing time of the fuse.

Note 2 to entry: The operating I^2t is the I^2t integral extended over the operating time of the fuse.

Note 3 to entry: The energy, in joules, released in 1 Ω of resistance in a circuit protected by a fuse is equal to the value of the operating I^2t expressed in A^2s.

[SOURCE: IEC 60050-441:1984, 441-18-23]

3.3.13
I^2t characteristic
curve giving I^2t values (pre-arcing I^2t and/or operating I^2t) as a function of prospective current under stated conditions of operation

3.3.14
I^2t zone
range contained by the minimum pre-arcing I^2t characteristic and the maximum operating I^2t characteristic, under specified conditions.

3.3.15
rated current of a fuse-link
I_n
value of current that the fuse-link can carry continuously without deterioration under specified conditions

3.3.16
time-current characteristic
curve giving the time, e.g. pre-arcing time or operating time as a function of the prospective current under stated conditions of operation

Note 1 to entry: For times longer than 0,1 s, for practical purposes the difference between pre-arcing and operating time is negligible.

[SOURCE: IEC 60050-441:1984, 441-17-13]

3.3.17
time-current zone
range contained by the minimum pre-arcing time-current characteristics and the maximum operating time-current characteristic, under specified conditions

IECNORM.COM : Click to view the full PDF of IEC 60269-1:2024 RLV

3.3.18
conventional non-fusing current
I_{nf}
value of current specified as that which the fuse-link is capable of carrying for a specified time (conventional time) without melting

[SOURCE: IEC 60050-441:1984, 441-18-27]

3.3.19
conventional fusing current
I_f
value of current specified as that which causes operation of the fuse-link within a specified time (conventional time)

[SOURCE: IEC 60050-441:1984, 441-18-28]

3.3.20
overload curve of an "a" fuse-link
curve showing the time for which an "a" fuse-link is able to carry the current without deterioration

SEE: 9.4.3.4 and Figure 2

3.3.21
power dissipation (of a fuse-link)
power released in a fuse-link carrying a stated value of electric current under prescribed conditions of use and behaviour

Note 1 to entry: The prescribed conditions of use and behaviour generally include a constant RMS value of the electric current after steady-state temperature conditions are reached.

[SOURCE: IEC 60050-441:1984/AMD1:2000, 441-18-38~~, modified~~]

3.3.22
acceptable power ~~dissipation~~ acceptance (of a fuse-base or a fuse-holder)
stated value of power dissipation of a fuse-link which a fuse-base or a fuse-holder can accept under prescribed conditions of use and behavior

[SOURCE: IEC 60050-441:1984/AMD1:2000, 441-18-39]

3.3.23
recovery voltage
voltage which appears across the terminals of a pole of a fuse after the breaking of the current

Note 1 to entry: This voltage may be considered in two successive intervals of time, one during which a transient voltage exists (see 2.3.23.1) followed by a second one during which only the power frequency or DC recovery voltage (see 2.3.23.2) exists.

[SOURCE: IEC 60050-441:1984, 441-17-25, modified – "switching device" removed from definition, Note 1 to entry modified]

IECNORM.COM : Click to view the full PDF of IEC 60269-1:2024 RLV

3.3.23.1
transient recovery voltage
abbreviation TRV
recovery voltage during the time in which it has a significant transient character

Note 1 to entry: The transient recovery voltage may be oscillatory or non-oscillatory or a combination of these, depending on the characteristics of the circuit and the fuse. It includes the voltage shift of the neutral of a polyphase circuit.

Note 2 to entry: The transient recovery voltage in three-phase circuits is, unless otherwise stated, that which appears across the first pole to clear, because this voltage is generally higher than that which appears across each of the other two poles.

[SOURCE: IEC 60050-441:1984, 441-17-26]

3.3.23.2
power-frequency or DC recovery voltage
recovery voltage after the transient voltage phenomena have subsided

Note 1 to entry: The power frequency or DC recovery voltage may be referred to as a percentage of the rated voltage.

[SOURCE: IEC 60050-441:1984, 441-17-27, modified – "or DC" added to term, Note 1 to entry added)]

3.3.24
arc voltage of a fuse
instantaneous value of the voltage which appears across the terminals of a fuse during the arcing time

[SOURCE: IEC 60050-441:1984, 441-18-30]

3.3.25
isolating distance (for a fuse)
shortest distance between the fuse-base contacts or any conductive parts connected thereto measured on a fuse with the fuse-link or the fuse-carrier removed

[SOURCE: IEC 60050-441:1984, 441-18-06]

4 Conditions for operation in service

4.1 General

Where the following conditions apply, fuses complying with this document are deemed capable of operating satisfactorily without further qualification. These conditions also apply for tests except those otherwise specified in Clause 9.

4.2 Ambient air temperature (T_a)

The ambient air temperature T_a (see 3.2.5.1) does not exceed 40 °C, its mean value measured over a period of 24 h does not exceed 35 °C, and its mean value measured over a period of one year is lower.

The minimum value of the ambient air temperature is −5 °C.

~~NOTE 2~~ In cases where the temperature conditions vary significantly from these values, this should be taken into consideration from the points of view of operation, temperature rise, etc. See Annex D.

IECNORM.COM : Click to view the full PDF of IEC 60269-1:2024 RLV

NOTE ~~1~~ The time-current characteristics given are related to a reference ambient air temperature of 20 °C. These time-current characteristics also approximately apply to a temperature of 30 °C.

4.3 Altitude

The altitude of the site of installation of the fuses does not exceed 2 000 m above sea-level.

4.4 Atmospheric conditions

The air is clean and its relative humidity does not exceed 50 % at the maximum temperature of 40 °C.

Higher relative humidity is permitted at lower temperatures, for example, 90 % at 20 °C.

Under these conditions, moderate condensation may occasionally occur due to variation in temperature.

~~NOTE~~ Where fuses are to be used under conditions different from those mentioned in 4.1, 4.2 and 4.3, in particular outdoors without protection, ~~the manufacturer should be consulted~~ the information shall be given in the manufacturer's literature. This applies also in cases where deposits of sea salt or abnormal deposits of industrial origin may occur.

4.5 Voltage

The system voltage has a maximum value not exceeding 110 % of the rated voltage of the fuse. For DC when obtained by rectifying AC, the ripple shall not cause a variation of more than 5 % above or 9 % below the mean value of 110 % of the rated voltage.

For fuses rated 690 V the maximum system voltage shall not exceed 105 % of the rated voltage of the fuse.

NOTE Attention is drawn to the fact that the indicating device or striker of a fuse may not operate if the fuse-link operates at a voltage, which is considerably lower than its rated voltage (see 9.4.3.6).

4.6 Current

The currents to be carried and to be broken are within the range specified in 8.4 and 8.5.

4.7 Frequency, power factor and time constant

4.7.1 Frequency

For AC the frequency is the rated frequency of the fuse-link.

4.7.2 Power factor

For AC the power factor is not lower than that shown in Table 20, appropriate to the value of prospective current.

4.7.3 Time constant (τ)

For DC the time constant corresponds to that shown in Table 21.

Some service duties may be found which exceed the limits shown in Table 21 as regards time constant. For such an application, a fuse-link which has been tested to verify that it meets the required time constant and is marked accordingly shall be used.

4.8 Conditions of installation

The fuse is installed in accordance with the manufacturer's instructions.

IECNORM.COM : Click to view the full PDF of IEC 60269-1:2024 RLV

If the fuse is likely to be exposed in service to abnormal vibrations or shocks, the manufacturer should be consulted.

4.9 Utilization ~~category~~ class

Utilization ~~categories~~ classes (for example, "gG") are specified according to 6.7.1.

4.10 ~~Discrimination~~ Selectivity of fuse-links

Limits of ~~discrimination~~ selectivity for times greater than 0,1 s are given in Table 2 and Table 3.

For "gG" and "gM" fuse-links pre-arcing I^2t values are given in Table 7 and operating I^2t values are given in subsequent parts. Values for other breaking ranges and utilization categories are shown in subsequent parts.

5 Classification

Fuses are classified according to Clause 6 and the subsequent parts.

6 Characteristics of fuses

6.1 Summary of characteristics

6.1.1 General

The characteristics of a fuse shall be stated in the following terms, where such terms are applicable.

6.1.2 Fuse-holders

a) Rated voltage (see 6.2)
b) Rated current (see 6.3.2)
c) Kind of current and rated frequency if applicable (see 6.4)
d) Rated acceptable power dissipation (see 6.5)
e) Dimensions or size
f) Number of poles, if more than one
g) Peak withstand current

6.1.3 Fuse-links

a) Rated voltage (see 6.2)
b) Rated current (see 6.3.1)
c) Kind of current and rated frequency, if applicable (see 6.4)
d) Rated power dissipation (see 6.5)
e) Time-current characteristics (see 6.6)
f) Breaking range (see 6.7.1)
g) Rated breaking capacity (see 6.7.2)
h) Cut-off current characteristics (see 6.8.1)
i) I^2t characteristics (see 6.8.2)
k) Dimensions or size

IECNORM.COM : Click to view the full PDF of IEC 60269-1:2024 RLV

6.1.4 Complete fuses

Degree of protection according to IEC 60529.

6.2 Rated voltage

For AC the standard values of rated voltages are given in Table 1.

Table 1 – Standard values of AC rated voltages for fuses

Series I V	Series II V
	120*
	208
230*	240
	277*
400*	415
500	480*
690*	600
1 000*	347

~~The values marked with an asterisk are standardized values according to IEC 60038. In the meantime, the other values of the table will also be used.~~

~~For d.c., the preferred values for rated voltages are given in Table 22.~~

~~NOTE The rated voltage of the fuse-link may be a value other than the rated voltage of the fuse-holder in which the fuse-link is to be used. The rated voltage of the fuse is the lowest value of the rated voltages of its parts (fuse-holder, fuse-link).~~

~~Table 22 – Preferred values of d.c. rated voltages for fuses~~

~~Series I~~	~~Series II~~
~~V~~	~~V~~
	~~110*~~
~~220*~~	–
–	~~250~~
~~400~~	–
~~440*~~	~~460~~
~~500~~	–
	~~600*~~
~~750*~~	
~~1 000~~	
–	~~1200~~
~~1 500*~~	

For DC the standard values of rated voltages are given in Table 2.

Table 2 – Preferred values of DC rated voltages for fuses

Series I V	Series II V

IECNORM.COM : Click to view the full PDF of IEC 60269-1:2024 RLV

	110
220	
	250
400	
440	460
500	
	600
750	
1 000	
	1 200
1 500	

For specific applications, rated voltage of different values to Table 1 and Table 2 shall be given in the manufacturer's instructions.

NOTE The rated voltage of the fuse is the lowest value of the rated voltages of its parts (fuse-holder, fuse-link).

6.3 Rated current

6.3.1 Rated current of the fuse-link

~~The rated current for the fuse-link, expressed in amperes, should be selected from the following values:~~

The preferred rated currents for the fuse-links are the following values expressed in A:

2 – 4 – 6 – 8 – 10 – 12 – 13 – 16 – 20 – 25 – 32 – 35 – 40 – 50 – 63 – 80 – 100 – 125 – 160 – 200 – 224 – 250 – 315 – 355 – 400 – 425 – 500 – 630 – 800 – 1 000 – 1 250 – 1 600

If it is necessary to choose lower values or intermediate values or higher values, these values should be selected from the series R10 of ISO 3, and in exceptional cases, from R20 or R40 of ISO 3.

6.3.2 Rated current of the fuse-holder

The rated current of the fuse-holder, expressed in amperes, should be selected from the series of rated currents of fuse-links if not otherwise specified in subsequent parts. For "gG" and "aM" fuses, the rated current of the fuse-holder represents the highest rated current of the fuse-link with which it is intended to be used.

6.4 Rated frequency (see 7.1 and 7.2)

The absence of any marking regarding rated frequency shall imply that the fuse meets the conditions laid down in this document for frequencies between 45 Hz and 62 Hz only.

IECNORM.COM : Click to view the full PDF of IEC 60269-1:2024 RLV

6.5 Rated power dissipation of a fuse-link and rated acceptable power dissipation of a fuse-holder.

The rated power dissipation of a fuse-link is stated by the manufacturer if not otherwise specified in subsequent parts. That value shall not be exceeded under specified test conditions.

The rated acceptable power dissipation of a fuse-holder is stated by the manufacturer if not otherwise specified in the subsequent parts. It is intended to be the maximum power dissipation the fuse-holder can tolerate under specified test conditions without exceeding the specified temperature rise.

6.6 Limits of time-current characteristics

6.6.1 General

The limits are based on a reference ambient air temperature T_a of +20 °C.

6.6.2 Time-current characteristics, time-current zones

They depend on the design of the fuse-link, and, for a given fuse-link, on the ambient air temperature and the cooling conditions.

NOTE For ambient air temperatures deviating from the temperature range according to 4.1, consultation with the manufacturer is necessary.

For fuse-links not complying with the standardized time-current zones as specified in the subsequent parts, the manufacturer should keep available (with their tolerances):

– the pre-arcing and operating time-current characteristics;

or

– the time-current zone.

NOTE For pre-arcing times smaller than 0,1 s, the manufacturer should keep available I^2t characteristics with their tolerances (see 6.8.3).

When the time-current characteristics are presented for pre-arcing times exceeding 0,1 s, they should be given with current as abscissa and time as ordinate. Logarithmic scales shall be used on both coordinate axes.

~~The basis of the logarithmic scales (the dimensions of one decade) shall be in the ratio 2/1 with the longer dimensions on the abscissa. However, because of long-established practice in the United States of America, a ratio of 1/1 is recognized as an alternative standard. The presentation shall be made on standardized paper A3 or A4, according to ISO 478 or ISO 593.~~

~~The dimensions of the decades shall be selected from the following series:~~

~~2 cm, 4 cm, 8 cm, 16 cm, and 2,8 cm, 5,6 cm, 11,2 cm.~~

~~NOTE It is recommended that, whenever possible, the preferred values 2,8 cm (ordinate) and 5,6 cm (abscissa) be used.~~

The basis of the logarithmic scales (the dimensions of one decade) shall be in the ratio 2/1 with the longer dimensions on the abscissa. However, because of long-established practice in other countries (for example UL fuse systems), a ratio of 1/1 is recognized as an alternative presentation.

6.6.3 Conventional times and currents

The conventional times and currents for "gG" and "gM" fuse-links are given in Table 3.

IECNORM.COM : Click to view the full PDF of IEC 60269-1:2024 RLV

Table 3 – Conventional time and current for "gG", ~~"gK"~~ and "gM" fuse-links

Rated current I_n for "gG"	Conventional time	Conventional current	
Characteristic current I_{ch} for "gM"[b] A	h	I_{nf}	I_f
I_n < 16	1	[a]	[a]
16 ≤ I_n ≤ 63	1		
63 < I_n ≤ 160	2	1,25 I_n	1,6 I_n
160 < I_n ≤ 400	3		
400 < I_n	4		

[a] Values for fuse-links with rated current less than 16 A are given in subsequent parts.

[b] For "gM" fuse-links, see 6.7.1.

6.6.4 Gates

For "gG" and "gM" fuse-links, the gates given in Table 4 apply.

Table 4 – Gates for specified pre-arcing times of "gG", ~~"gK"~~ and "gM" fuse-links[a]

1 I_n for "gG" I_{ch} for "gM" [b] A	2 I_{min} (10 s) [c] A	3 I_{max} (5 s) A	4 I_{min} (0,1 s) A	5 I_{max} (0,1 s) A
13	24	65	65	130
16	33	65	85	150
20	42	85	110	200
25	52	110	150	260
32	75	150	200	350
35	83	175	225	445
40	95	190	260	450
50	125	250	350	610
63	160	320	450	820
80	215	425	610	1 100
100	290	580	820	1 450
125	355	715	1 100	1 910
160	460	950	1 450	2 590
200	610	1 250	1 910	3 420
224	600	1 600	2 000	4 300
250	750	1 650	2 590	4 500
315	1 050	2 200	3 420	6 000
355	1 100	2 750	3 500	7 700
400	1 420	2 840	4 500	8 060
425	1 350	3 300	4 500	9 500
450	1 600	3 300	5 250	9 300
500	1 780	3 800	6 000	10 600
630	2 200	5 100	8 060	14 140
800	3 060	7 000	10 600	19 000
1 000	4 000	9 500	14 140	24 000
1 250	5 000	13 000	19 000	35 000
1 600	7 500	16 000	24 000	43 000

[a] Values for fuses with rated current less than ~~16 A~~ 13A are given in subsequent parts.

[b] For "gM" fuse-links, see 6.7.1.

[c] I_{min} (10 s) is the minimum value of current for which the pre-arcing time is not less than 10 s.

IECNORM.COM : Click to view the full PDF of IEC 60269-1:2024 RLV

For "aM" fuses the standard gates for time- current characteristics based on reference ambient air temperature of 20 °C are given in Table 5 and Figure 3. The standardized k-factors are k_0 = 1,5; k_1 = 4 and k_2 = 6,3.

Table 5 – Gates for "aM ' fuse-links (all rated currents)

	4 I_n	6,3 I_n	8 I_n	10 I_n	12,5 I_n	19 I_n
$t_{operating}$	-	60 s	-	-	0,5 s	0,10 s
$t_{pre\text{-}arcing}$	60 s	-	0,5 s	0,2 s	-	-

~~For "gD" and "gN" fuse-links, gates are given in IEC 60269-2, fuse system H.~~

~~For "gK" fuse-links, gates are given in IEC 60269-2, fuse system K.~~

6.7 Breaking range and breaking capacity

6.7.1 Breaking range and utilization category

The first letter shall indicate the breaking range:

– "g" fuse-links (full-range breaking-capacity fuse-link);

– "a" fuse-links (partial-range breaking-capacity fuse-link).

The second letter shall indicate the utilization category; this letter defines with accuracy the time-current characteristics, conventional times and currents, gates.

~~For example~~

~~– "gG" indicates fuse-links with a full-range breaking capacity for general application;~~

~~– – "gK" indicates fuse-link with a full-range breaking capacity for general application;~~

~~– "gM" indicates fuse-links with a full-range breaking capacity for the protection of motor circuits;~~

~~– "aM" indicates fuse-links with a partial-range breaking capacity for the protection of motor circuits;~~

~~– "gD" indicates time-delay fuse-links with a full-range breaking capacity;~~

~~– "gN" indicates non-time-delay fuse-links with a full-range breaking capacity.~~

~~NOTE 1 At present "gG" fuse-links are often used for the protection of motor circuits, which is possible when their characteristics are suitable to be capable of withstanding the motor starting current.~~

~~NOTE 2 A "gM" fuse-link, which has a dual rating is characterized by two current values. The first value I_n denotes both the rated current of the fuse-link and the rated current of the fuse-holder; the second value I_{ch} denotes the time-current characteristic of the fuse-link as defined by the gates in Tables 2, 3 and 7.~~

~~These two ratings are separated by a letter, which defines the applications.~~

~~For example: I_n M I_{ch} denote a fuse intended to be used for protection of motor circuits and having the characteristic G. The first value I_n corresponds to the maximum continuous current for the whole fuse and the second value I_{ch} corresponds to the G characteristic of the fuse-link.~~

~~NOTE 3 An "aM" fuse-link is characterized by one current value I_n and time-current characteristics as defined in 8.4.3.3.1 and Figure 2.~~

IECNORM.COM : Click to view the full PDF of IEC 60269-1:2024 RLV

6.7.2 Rated breaking capacity

The rated breaking capacity of a fuse-link is given by the manufacturer corresponding to the rated voltage. Values of minimum rated breaking capacity are given in subsequent parts.

6.8 Cut-off current and I^2t characteristics

6.8.1 General

The value for cut-off and I^2t characteristics shall take into account manufacturing tolerances and shall refer to the service conditions as specified in subsequent parts, for example, the values of voltage, frequency and power factor.

6.8.2 Cut-off current characteristics

The cut-off current characteristics shall represent the maximum instantaneous values of current likely to be experienced in service (see 9.6.1 and Annex C).

Where the cut-off current characteristics are required, and unless specified in subsequent parts, they should be given by the manufacturer according to the example shown in Figure 4, in a double logarithmic presentation with the prospective current as abscissa.

6.8.3 I^2t characteristics

The pre-arcing I^2t characteristics for pre-arcing times of less than 0,1 s down to a time corresponding to the rated breaking capacity shall be given by the manufacturer. They shall represent the lowest values likely to be experienced in service as a function of the prospective current.

The operating I^2t characteristics with specified voltages as parameters shall be given by the manufacturer for pre-arcing times less than 0,1 s. They shall represent the highest values likely to be experienced in service as a function of the prospective current.

When presented graphically, the I^2t characteristics shall be given with prospective current as abscissa and I^2t values as ordinate. Logarithmic scales shall be used on both coordinate axes. (For the use of the logarithmic scales, see 6.6.2.)

7 Markings

7.1 General

The marking shall be durable and easily legible. ~~Compliance is checked by inspection and by the following test.~~

~~The marking is rubbed by hand for 5 s with a piece of cloth soaked with water and again for 5 s with a piece of cloth soaked with aliphatic solvent hexane.~~

~~NOTE It is recommended to use aliphatic solvent hexane with an aromatic content of maximum 0,1 volume percentage, a kauributanol value of approximately 29, an initial boiling point of approximately 65 °C, a dry point of approximately 69 °C and a density of approximately 0,68 g/cm³.~~

Compliance is checked by test 9.12.

NOTE 1 The marking for rated current and rated voltage may, for instance, be as follows:

10 A 500 V or 10/500 or $\frac{10}{500}$

NOTE 2 For all parts of fuses relevant symbols from IEC 60417 can be used.

IECNORM.COM : Click to view the full PDF of IEC 60269-1:2024 RLV

7.2 Markings of fuse-holders

The following information shall be marked on all fuse-holders:

– name of the manufacturer or a trade mark by which he may be readily identified;
– manufacturer's identification reference enabling all the characteristics listed in 6.1.2 to be found;
– rated voltage;
– rated current;
– kind of current and rated frequency, when applicable.

~~NOTE~~ A fuse-holder marked with AC ratings may also be used for DC If a fuse-holder contains a removable fuse-base and a removable fuse-carrier. Both should be separately marked for the purpose of identification.

7.3 Markings of fuse-links

The following information shall be marked on all fuse-links except small fuse-links where this is impracticable:

– name of the manufacturer or a trade mark by which he may be readily identified;
– manufacturer's identification reference, enabling all the characteristics listed in 6.1.3 to be found;
– rated voltage;
– rated current ~~(for "gM" type see 5.7.1)~~;
– breaking range and utilization category (letter code), where applicable (see 6.7.1);
– kind of current and, if applicable, rated frequency (see 6.4).

~~NOTE~~ Fuse-links should be marked separately for AC and DC if the fuse-link is provided for AC and DC.

For small fuse-links, where it is impracticable to include all the specified information on the fuse-link, the trade mark, list reference of the manufacturer, rated voltage and the rated current shall be marked.

~~**6.3 Marking symbols**~~

~~For the kind of current and frequency, use symbols in accordance with IEC 60417.~~

~~NOTE The marking for rated current and rated voltage may, for instance, be as follows:~~

~~10 A 500 V or 10/500 or~~ $\cancel{\frac{10}{500}}$

8 Standard conditions for construction

8.1 Mechanical design

8.1.1 Replacement of fuse-links

A fuse-link shall have adequate mechanical strength and its contacts shall be securely fixed. ~~It shall be possible to replace the fuse-links easily and safely.~~

8.1.2 Connections, including terminals

The fixed connections shall be such that the necessary contact force is maintained under the conditions of service and operation.

IECNORM.COM : Click to view the full PDF of IEC 60269-1:2024 RLV

No contact force on connections shall be transmitted through insulating material other than ceramic or other material with characteristics not less suitable, unless there is sufficient resilience in the metallic parts to compensate for any possible shrinkage or other deformation of the insulating material. Tests are specified in subsequent parts, where necessary.

Terminals shall be such that they cannot turn or be displaced when the connecting screws are tightened, and such that the conductors cannot be displaced. The parts gripping the conductors shall be of metal and shall have such a shape that they cannot unduly damage conductors.

Terminals shall be so arranged that they are readily accessible (after removal of covers, if any) under the intended conditions of installation.

NOTE Requirements of screwless-type terminals are given in Annex E.

8.1.3 Fuse-contacts

Fuse-contacts shall be such that the necessary contact force is maintained under the conditions of service and operation, in particular under the conditions corresponding to 8.5.

Contact shall be such that the electromagnetic forces occurring during operation under conditions in accordance with 8.5 shall not impair the electrical connections between

a) the fuse-base and the fuse-carrier;

b) the fuse-carrier and the fuse-link;

c) the fuse-link and the fuse-base, or, if applicable, any other support.

In addition, fuse contacts shall be so constructed and of such material that, when the fuse is properly installed and service conditions are normal, adequate contact is maintained

a) after repeated engagement and disengagement;

b) after being left undisturbed in service for a long period (see 9.10).

Fuse-contacts of copper alloy shall be free from season cracking.

These requirements are verified by the tests according to 9.10, 9.11.2.1 and in Clause 8 of subsequent parts of IEC 60269.

8.1.4 Construction of a gauge-piece

A gauge-piece, if any, shall be so designed that it withstands normal stresses occurring during use.

8.1.5 Mechanical strength of the fuse-link

A fuse-link shall have adequate mechanical strength and its contacts shall be securely fixed.

8.2 Insulating properties and suitability for isolation

The fuses shall be such that they do not lose their insulating properties at the voltages to which they are subjected in normal service. The fuse shall be suitable for isolation when it is in its normal open position, the fuse-link remaining inside the fuse-carrier, or when the fuse-link, and, when applicable, the fuse-carrier is removed. The applicable overvoltage category is specified in subsequent parts.

The fuse shall be deemed to satisfy these conditions if it passes the tests for verification of insulating properties and suitability for isolation in accordance with 9.2.

IECNORM.COM : Click to view the full PDF of IEC 60269-1:2024 RLV

The minimum creepage distances, clearances and distances through insulating material or sealing compound shall comply with the values specified in subsequent parts.

8.3 Temperature rise, power dissipation of the fuse-link and acceptable power dissipation of a fuse-holder

The fuse-holder shall be so designed and proportioned as to carry continuously, under standard conditions of service, the rated current of the fuse-link with which it is provided without exceeding

– the temperature-rise limits specified in Table 6 at the rated acceptable power dissipation of the fuse-holder as indicated by the manufacturer or otherwise specified in subsequent parts.

The fuse-link shall be so designed and proportioned as to carry continuously, under standard conditions of service, its rated current without exceeding

– the rated power dissipation of the fuse-link as indicated by the manufacturer or otherwise specified in the subsequent parts.

In particular, the temperature-rise limits specified in Table 6 shall not be exceeded

– when the rated current of the fuse-link is equal to the rated current of the fuse-holder intended to accommodate this fuse-link;
– when the power dissipation of the fuse-link is equal to the rated acceptable power dissipation of the fuse-holder.

These requirements are verified by the tests according to 9.3.

Table 6 – Temperature rise limits $\Delta T = (T - T_a)$ for ~~contacts and~~ terminals

			~~Temperature rise~~ ~~K~~	
			~~Unenclosed~~ ~~a)~~	~~Enclosed~~ ~~b)~~
~~Contacts~~ ~~g) i)~~	~~Spring loaded~~	~~Bare copper~~	~~40~~	~~45~~
		~~Bare brass~~	~~45~~	~~50~~
		~~Tin plated~~	~~55~~ ~~f)~~	~~60~~ ~~f)~~
		~~Nickel-plated~~	~~70~~ ~~e) c) h)~~	~~75~~ ~~e) h) c)~~
		~~Silver-plated~~	~~c)~~	~~c)~~
	~~Bolted~~	~~Bare copper~~	~~55~~	~~60~~
		~~Bare brass~~	~~60~~	~~65~~
		~~Tin plated~~	~~65~~ ~~f)~~	~~65~~ ~~f)~~
		~~Nickel-plated~~	~~80~~ ~~c) e) h)~~	~~85~~ ~~c) e) h)~~
		~~Silver-plated~~	~~c)~~	~~c)~~
~~Terminals~~		~~Bare copper~~	~~55~~	~~60~~
		~~Bare brass~~	~~60~~	~~65~~
		~~Tin-plated~~	~~65~~	~~65~~
		~~Silver- or nickel-plated~~	~~70~~ ~~d)~~	~~70~~ ~~d)~~

~~a) In the case $T_e = T_a$ (see 2.2.5).~~

~~b) Applicable for values of ΔT_e between 10 K and 30 K (10 K ≤ ΔT_e ≤ 30 K), the ambient air temperature T_a should not be higher than 40 °C.~~

~~c) Limited only by the necessity of not causing any damage to adjacent parts.~~

~~d) The limit of temperature rise is governed by the use of PVC insulated conductors.~~

~~e) The given values do not apply for fuse systems for which the cross-sectional area and the material of the contacts are given in the subsequent parts.~~

IECNORM.COM : Click to view the full PDF of IEC 60269-1:2024 RLV

~~f) These limits may be exceeded if it is verified that no deterioration of the contact is caused by the actual temperature during the test for non-deterioration of contact.~~

~~g) The values do not apply to certain fuses which are too small, so the temperature cannot be measured without the risk of failure. Therefore, the verification of non-deterioration of contacts will be done by a test given in 8.10.~~

~~h) The use of nickel-plated contacts requires, due to its relatively high electrical resistance, certain precautions in the design of the contact, among others the use of a relatively high contact pressure.~~

~~i) The test for non-deterioration of contacts is given in 8.10.~~

	Contacts	Temperature rise ΔT in K
Terminals	Bare Copper	60
	Bare Brass or tin-plated	65
	Silver-plated or nickel-plated	70 [a)]

[a)] The limit of temperature rise is governed by the use of PVC insulated conductors or for other connection methods or conductors the manufacturer has to give maximum values of temperature rise in his documentation and the conductor rating must be observed. Temperature limits of the fuse and the conductor must be aligned.

8.4 Operation

The fuse-link shall be so designed and proportioned that, when tested in its appropriate test arrangement at rated frequency and an ambient air temperature of (20 ± 5) °C,

– it is able to carry continuously any current not exceeding its rated current;

– it is able to withstand overload conditions as they may occur in normal service (see 9.4.3.4).

For a "g" fuse-link within the conventional time,

– the fuse-link does not operate, when it carries any current not exceeding the conventional non-fusing current (I_{nf});

– it operates when it carries any current equal to or exceeding the conventional fusing current (I_f).

NOTE Time-current zones, if any, are to be considered.

For an "a" fuse-link,

– the fuse-link does not operate when it carries a current not exceeding $k_1 I_n$ for the corresponding time indicated in the overload curve (see Figure 2);

– when carrying a current between $k_1 I_n$ and $k_2 I_n$, the fuse-element may melt, provided that the pre-arcing time is greater than the value indicated in the pre-arcing time-current characteristic;

– it operates when it carries a current exceeding $k_2 I_n$ within its time-current zone, including the arcing time.

The time-current values measured in 9.4.3.3 shall fall within the time-current zone provided by the manufacturer.

A fuse-link is deemed to satisfy these conditions if it passes the tests prescribed in 9.4.

8.5 Breaking capacity

The fuse shall be capable of breaking, at rated frequency, and at a voltage not exceeding the recovery voltage specified in 9.5, any circuit having a prospective current between,

– for "g" fuse-links, the current I_f;

IECNORM.COM : Click to view the full PDF of IEC 60269-1:2024 RLV

– for "a" fuse-links, the current $k_2 I_n$; and

– in the case of AC, the rated breaking capacity at power factors not lower than those shown in Table 21 appropriate to the value of the prospective current;

– in the case of DC, the rated breaking capacity at time constants not greater than those limits shown in Table 22 appropriate to the value of the prospective current.

During operation of the fuse-link in a test circuit as described in 9.5, the arc voltage shall not exceed the values given in Table 7.

NOTE Where fuse-links are used in circuits with system voltages belonging to a range lower than that corresponding to the rated voltage of the fuse-links, consideration should be given to the arc voltage, which should not exceed the value in Table 7 corresponding to the system voltage.

Table 7 – Maximum arc voltage

Rated voltage U_n of the fuse-link V		**Maximum arc voltage, peak value** V
AC and DC currents	Up to and including 60	1 000
	61 to 300	2 000
	301 to 690	2 500
	691 to 800	3 000
	801 to 1 000	3 500
DC only	1 001 to 1 200	3 500
	1 201 to 1 500	5 000
NOTE For fuse-links having rated current less than 16 A, the maximum arc voltage is not specified in this document but is under consideration.		

A fuse shall be deemed to satisfy these conditions if it passes the tests prescribed in 9.5.

8.6 Cut-off current characteristic

If not otherwise specified in subsequent parts, the values of cut-off current measured as specified in 9.6 shall be less than, or equal to, the values corresponding to the cut-off current characteristics assigned by the manufacturer (see 6.8.2).

NOTE For the cut-off current characteristics as function of the actual pre-arcing time, see Annex C.

8.7 I^2t characteristics

The pre-arcing I^2t values verified according to 9.7 shall not be less than the characteristics stated by the manufacturer in accordance with 6.8.3, and lie within the limits given in Table 8 for "gG" and "gM" fuse-links. For pre-arcing times smaller than 0,01 s, limits are given in subsequent parts, if required. Values for "gD" and "gN" fuse-links are given in IEC 60269-2, fuse system H. ~~Values for "gK" fuse-links are given in IEC 60269-2, fuse system K.~~

The operating I^2t values verified according to 9.7 shall be less than, or equal to, the characteristics stated by the manufacturer in accordance with 6.8.3 or specified in subsequent parts.

IECNORM.COM : Click to view the full PDF of IEC 60269-1:2024 RLV

Table 8 – Pre-arcing I^2t values at 0,01 s for "gG" and "gM" fuse-links

I_n for "gG" I_{ch} for "gM" [a] A	I^2t_{min} $10^3 \times (A^2s)$	I^2t_{max} $10^3 \times (A^2s)$
16	0,3	1,0
20	0,5	1,8
25	1,0	3,0
32	1,8	5,0
35	2,2	8,0
40	3,0	9,0
50	5,0	16,0
63	9,0	27,0
80	16,0	46,0
100	27,0	86,0
125	46,0	140,0
160	86,0	250,0
200	140,0	400,0
224	200,0	520,0
250	250,0	760,0
315	400,0	1 300,0
400	760,0	2 250,0
500	1 300,0	3 800,0
630	2 250,0	7 500,0
800	3 800,0	13 600,0
1 000	7 840,0	25 000,0
1 250	13 700,0	47 000,0
~~[a] For "gM", see 5.7.1.~~		

IECNORM.COM : Click to view the full PDF of IEC 60269-1:2024 RLV

8.8 Overcurrent selectivity of fuse-links

Requirements concerning overcurrent ~~discrimination~~ selectivity are dependant upon the fuse system, the rated voltage and the application of the fuse; relevant requirements may be given in subsequent parts.

8.9 Protection against electric shock

8.9.1 General

For the protection of persons against electric shock, three states of the fuse shall be taken into consideration:

– when the complete fuse is properly mounted, installed and wired with fuse-base, fuse-link and, where applicable, gauge-piece, fuse-carrier and enclosure forming part of the fuse (normal service condition);

– during the replacement of the fuse-link;

– when the fuse-link, and where applicable, the fuse-carrier is removed.

The rated impulse withstand voltage is given in Table 9 appropriate to the rated voltage and the overvoltage category of the fuse, which are specified in subsequent parts.

The requirements are specified in subsequent parts. See also 9.8.

Table 9 – Rated impulse withstand voltage

Rated voltage of the fuse up to and including V	Rated impulse withstand voltage U_{imp} (1,2/50 µs) kV			
	Overvoltage category			
	IV	III	II	I
230	4	2,5	1,5	0,8
400	6	4	2,5	1,5
690	8	6	4	2,5
1 000	12	8	6	4

8.9.2 Clearances and creepage distances

The clearances shall be not less than the values given in Table 10 to reduce the risk of disruptive discharge due to overvoltage.

Table 10 – Minimum clearances in air

	Minimum clearances mm
Rated impulse withstand voltage U_{imp} kV	Inhomogeneous field conditions
0,8	0,8
1,5	0,8
2,5	1,5
4,0	3,0
6,0	5,5
8,0	8,0
12,0	14,0
NOTE The values of minimum clearances in air are based on 1,2/50 µs impulse voltage, for barometric pressure of 80 kPa, equivalent to normal atmospheric pressure at 2 000 m above sea-level.	

Creepage distances shall also correspond to the material group, as defined in 2.7.1.3 of IEC 60664-1:2002, corresponding with the rated voltage given in Table 11.

Table 11 – Minimum creepage distances

	Creepage distances for equipment subject to long-term stress mm		
Rated voltage of the fuse up to and including V	Material group I	Material group II	Material group III
230	3,2	3,6	4
400	5	5,6	6,3
690	8	9	10
1 000	12,5	14	16

IECNORM.COM : Click to view the full PDF of IEC 60269-1:2024 RLV

8.9.3 Leakage currents of fuses suitable for isolation

For fuses suitable for isolation and having a rated voltage greater than 50 V, the leakage current shall be measured through each pole with the contacts in the open position.

The value of the leakage current, with a test voltage equal to 1,1 times the rated voltage, shall not exceed

- 0,5 mA per pole for fuses in a new condition;
- 2 mA per pole for fuses having been submitted to tests according to 9.5.

8.9.4 Additional constructional requirements for ~~fuses~~ fuse holders for linked ~~fuse-~~carriers, suitable for isolation

The fuse-holder shall be marked with the symbol IEC 60617-S00369.

~~NOTE 1 Symbol IEC 60617-S00369 (before: symbol 07-21-08 of IEC 60617-7).~~

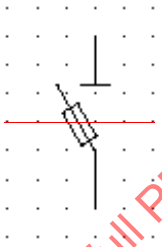

NOTE 1 Symbol IEC 60617. New definition with double opening to be used (2021-04-29).

SC 34B Fuse-disconnector double opening C "Fuse base"

When the fuse is in open position, with the fuse-link remaining inside the fuse-carrier, the isolating distance between the fuse contacts in accordance with the isolating function shall be provided. Indication of this position shall be provided by the position of the fuse-carrier.

This requirement is verified in accordance with 9.2.

When there exists a locking means specified by the manufacturer in order to lock the fuses in the isolated position, locking shall be possible only in this position. Fuses shall be designed so that the fuse-carrier remains attached to the fuse-base giving a correct indication of the open position, and of locking, if any.

NOTE 2 Locking in the close position is permitted for particular applications.

For fuses incorporating electronic circuits connected to the main poles, the disconnection of the electronic circuit(s) is permitted during dielectric tests.

8.10 Resistance to heat

All components shall be sufficiently resistant to heat which may occur in normal use.

If not otherwise specified in subsequent parts, this requirement is considered as being met when satisfactory results are obtained in tests according to 9.9 and 9.10.

IECNORM.COM : Click to view the full PDF of IEC 60269-1:2024 RLV

8.11 Mechanical strength

All components of the fuse shall be sufficiently resistant to mechanical stresses which may occur in normal use.

If not otherwise specified in the subsequent parts, this requirement is considered as being met when satisfactory results are obtained on tests according to 9.3 to 9.5 and 9.11.1.

8.12 Resistance to corrosion

8.12.1 General

All metallic components of the fuse shall be resistant to corrosive influences which may occur in normal use.

8.12.2 Resistance to rusting

Ferrous components shall be so protected that they meet the relevant tests.

If not otherwise specified in subsequent parts, this requirement is considered as being met when satisfactory results are obtained on tests according to 9.11.2.3 and 9.11.2.3.

8.12.3 Resistance to season cracking

Current-carrying parts shall be sufficiently resistant to season cracking. Relevant tests are specified in 9.11.2.1 and 9.11.2.1.

8.13 Resistance to abnormal heat and fire

All components of the fuse shall be sufficiently resistant to abnormal heat and fire. The test is specified in 9.11.2.2.

8.14 Electromagnetic compatibility

Fuses within the scope of this document are not sensitive to normal electromagnetic disturbances, and therefore no immunity tests are required.

Significant electromagnetic disturbance generated by a fuse is limited to the instant of its operation. Provided that the maximum arc voltages during operation in the type tests comply with the requirements of 8.5, the requirements for electromagnetic compatibility are deemed to be satisfied.

9 Tests

9.1 Overview

9.1.1 General

Tests shall be made according to the IEC rules.

9.1.2 Kind of tests

The tests specified in this clause are type tests and are performed under the responsibility of the manufacturer.

If, during one of these tests, a failure occurs and the manufacturer can furnish evidence that this failure is not typical of the fuse-type but due to an individual fault of the tested sample, the relevant test shall be repeated. This does not apply to the breaking capacity test.

IECNORM.COM : Click to view the full PDF of IEC 60269-1:2024 RLV

If acceptance tests are agreed upon between user and manufacturer, the test shall be selected from the type tests.

Type tests are performed in order to verify that a particular type of fuse or a range of fuses forming a homogeneous series (see 9.1.6.3) corresponds to the specified characteristics, and operates satisfactorily under normal conditions of service or under particular specified conditions.

Compliance with the type test is deemed to prove that all fuses of identical construction meet the requirements of this document.

If any part of the fuse is modified in a manner liable to adversely affect the result of a type test already performed, that type test shall be repeated.

9.1.3 Ambient air temperature (T_a)

The ambient air temperature shall be measured by measuring devices protected against draughts and heat radiation, placed at the height of the centre of the fuse and at a distance of approximately 1 m. At the beginning of each test, the fuse shall be approximately at the ambient air temperature.

9.1.4 Condition of the fuse

Tests shall be made on fuses in a clean and dry condition.

9.1.5 Arrangement of the fuse and dimensions

Except for the degree of protection test (see 9.8), the fuse shall be mounted in free air in draught-free surroundings in the normal operation position, for example, vertical, and, unless otherwise specified, on insulating material of sufficient rigidity to withstand the forces encountered without applying external load to the fuse under test.

The fuse-link shall be mounted either as in normal use, or in the fuse-holder for which it is intended, or in a test rig in accordance with the indications given in the relevant subclause in a subsequent part.

Before the tests are started, the specified external dimensions shall be measured and the results compared with the dimensions specified in the relevant data sheets of the manufacturer or specified in subsequent parts.

9.1.6 Testing of fuse-links

9.1.6.1 General

Fuse-links shall be tested with the kind(s) of current and, for AC, frequency for which they are rated, unless otherwise specified in subsequent parts.

9.1.6.2 Complete tests

Before the tests are commenced, the internal resistance R of all samples shall be measured at an ambient-air temperature of (20 ± 5) °C with a measuring current of not more than 0,1 I_n. The value R shall be recorded in the test report.

A survey of the complete tests is given in Table 12.

9.1.6.3 Testing of fuse-links of a homogeneous series

Fuse-links of different rated currents are considered to form a homogeneous series provided

IECNORM.COM : Click to view the full PDF of IEC 60269-1:2024 RLV

– they have enclosures identical in form and construction, and with the exception of fuse-elements, in dimension. This condition is also met when only the fuse-link contacts differ, in which case tests are performed with the fuse-link having the fuse-link contacts most likely to produce the least favourable test results;

– they have the same arc-extinguishing medium and the same completeness of filling;

– their fuse-elements consist of identical materials. They shall have the same length and form;

NOTE For example, they ~~may~~ can be formed with identical tools from material of different thickness.

– their cross-section, which may vary along the length of fuse-elements, as well as the number of fuse-elements, shall not exceed the cross-section and the number of fuse-elements, respectively, of those fuse-links having the highest rated current;

– the minimum distances between adjacent fuse-elements and between the fuse-elements and the inner surface of the cartridge is not less than those in the fuse-link having the highest rated current;

– they are suitable to be used with a given fuse-holder, or are intended to be used without a fuse-holder, but in an arrangement identical for all rated currents of the homogeneous series.

– With respect to the temperature-rise test, the product $RI_n^{3/2}$ does not exceed the corresponding value for the fuse-link which has the largest rated current of the homogeneous series. The resistance R shall be measured with the fuse-link as indicated in 9.1.6.2.

– With respect to the breaking-capacity test, the rated breaking capacity is not greater than that of the fuse-link having the largest current within the homogeneous series. Otherwise, the fuse-link of the largest rated current among those having the greater rated breaking capacity shall be subjected to tests no. 1 and no. 2.

For fuse-links of a homogeneous series,

– the fuse-link having the largest rated current shall be tested completely according to Table 12;

– the fuse-link having the smallest rated current shall be tested only according to Table 13;

– the fuse-links between the largest and the smallest rated current shall be tested according to Table 14.

IECNORM.COM : Click to view the full PDF of IEC 60269-1:2024 RLV

Table 12 – Survey of complete tests on fuse-links and number of fuse-links to be tested

Test according to subclause		Number of samples																								
		"g" fuse-links															"a" fuse-links									
		1	1	1	1	1	1	3	3	1	3	1	1	1	1	3	1	1	1	1	3	3	1	4	3	3
9.1.5	Dimensions	X	X	X													X	X	X							
9.1.6.2	Resistance	X	X	X	X	X	X	X	X	X	X	X	X	X	X	X	X	X	X	X	X	X	X	X	X	X
9.3	Temperature rise, power dissipation	X															X									
9.4.3.1 a)	Conventional non-fusing current	X																								
9.4.3.1 b)	Conventional fusing current	X																								
9.4.3.2	Rated current		X																							
9.4.3.3	Time-current characteristics, gates																									
	Gates, "g" fuse-links a) I_{min} (10 s)											X														
	b) I_{max} (5 s)												X													
	c) I_{min} (0,1 s)													X												
	d) I_{max} (0,1 s)														X											
	Gates, "a" fuse-links																							X		
9.4.3.4	Overload										X															X
9.4.3.5	Conventional cable overload protection									X																
9.4.3.6	Indicating device [c)]				X	X	X	X	X									X	X	X	X	X				
	Striker [c)]			X	X	X	X	X	X									X	X	X	X	X	X			
9.5 no. 5	Breaking capacity [a)]				X													X								
9.5 no. 4	Breaking capacity [a)]					X													X							
9.5 no. 3	Breaking capacity [a)]						X													X						
9.5 no. 2	Breaking capacity [b)]							X													X					
9.5 no. 1	Breaking capacity [b)]								X													X				
9.6	Cut-off current characteristic [d)]																									
9.7	I^2t characteristic [d)]																									
9.8	Degree of protection [d)]																									
9.9	Resistance to heat [d)]																									
9.10	Non-deterioration of contacts [d)]																									
9.11.1	Mechanical strength [d)]																									
9.11.2.1	Freedom from season cracking [d) e)]																									
9.11.2.2	Resistance to abnormal heat and fire [d)]															X									X	
9.11.2.3	Resistance to rusting [d)]																									
9.12	Marking	X																X								

[a)] Valid also for time-current characteristic, if ambient air temperature is between 15 °C and 25 °C (see 9.4.3.3)

For fuse-links tested in test-rigs, tests in accordance with 3a), 4a) and 5a) of 9.4.3.3 may be used.

[b)] Valid also for cut-off current and I^2t characteristics (see 9.6 and 9.7).

[c)] For fuse-links with indicating device or striker only.

[d)] Tests according to 9.6 to 9.11 relating to fuse systems which are mentioned in subsequent parts may be possible. Number of samples to be tested depends on system and material.

[e)] For fuse-links with current-carrying parts made of rolled copper alloy with less than 83 % copper.

IECNORM.COM : Click to view the full PDF of IEC 60269-1:2024 RLV

Table 13 – Survey of tests on fuse-links of smallest rated current of homogeneous series and number of fuse-links to be tested

Test according to subclause		Number of samples																			
		"g" fuse-links													"a" fuse-links						
		1	1	1	1	1	3	1	1	3	1	1	1	1	1	1	1	3	1	3	4
9.1.5	Dimensions	X	X	X											X	X	X				
9.1.6.2	Resistance	X	X	X	X	X	X	X	X	X	X	X	X	X	X	X	X	X	X	X	X
9.4.3.1 a)	Conventional non-fusing current					X															
9.4.3.1 b)	Conventional fusing current					X															
9.4.3.2	Rated current				X																
9.4.3.3	Time-current characteristics																				
	no. 3a [d]	X													X						
	no. 4a [d]		X													X					
	no. 5a [d]			X													X				
9.4.3.3.2	Gates, "g" fuse-links a) I_{min} (10 s)										X										
	b) I_{max} (5 s)											X									
	c) I_{min} (0,1 s)												X								
	d) I_{max} (0,1 s)													X							
	Gates, "a" fuse-links																				X
9.4.3.4	Overload									X										X	
9.4.3.5	Conventional cable overload protection								X												
9.4.3.6	Indicating device [c]						X											X			
	Striker [c]						X	X										X	X		
9.5 no. 1	Breaking capacity [a]						X											X			
9.6	Cut-off current characteristic [b]																				
9.7	I^2t characteristic [b]																				
9.8	Degree of protection [b]																				
9.9	Resistance to heat [b]																				
9.10	Non-deterioration of contacts [b]																				
9.11.1	Mechanical strength [b]																				
9.11.2.2	Resistance to abnormal heat and fire [b]																				
9.11.2.3	Resistance to rusting [b]																				

[a] Valid also for cut-off current and I^2t characteristics (see 9.6 and 9.7).

[b] Tests according to 9.6 and 9.11 relating to fuse systems which are mentioned in subsequent parts may be possible. Number of samples to be tested depends on system and material.

[c] For fuse-links with indicating device or striker only.

[d] With the exception of "gD", "gG" and "gM", as adequate tests are carried out in connection with verification of the gates (see 8.4.3.3.2).

IECNORM.COM : Click to view the full PDF of IEC 60269-1:2024 RLV

Table 14 – Survey of tests on fuse-links of rated currents between the largest and the smallest rated current of a homogeneous series and number of fuse-links to be tested

Test according to subclause		Number of samples										
		"g" fuse-links								"a" fuse-links		
		1	1	1	1	1	1	1	1	1	2	2
9.1.5	Dimensions	X		X						X		X
9.1.6.1	Resistance	X	X	X	X	X	X	X	X	X	X	X
9.4.3.1 a)	Conventional non-fusing current		X									
9.4.3.2	Rated current	X										
9.4.3.3.1	Time-current characteristics no. 4a [a)]			X						X		
9.4.3.3.2	Gates, "g" fuse-links a) I_{min} (10 s)					X						
	b) I_{max} (5 s)						X					
	c) I_{min} (0,1 s)							X				
	d) I_{max} (0,1 s)								X			
	Gates, "a" fuse-links										X	X
9.4.3.5	Conventional cable overload protection test				X							

[a)] With the exception of "gD" "gG" and "gM", as adequate tests are carried out in connection with verification of the gates (see 9.4.3.3.2).

~~NOTE~~ The tests according to Table 14 may be performed at reduced voltages.

9.1.7 Testing of fuse-holders

The fuse-holders shall be subjected to the tests according to Table 15.

Table 15 – Survey of complete tests on fuse-holders and number of fuse-holders to be tested

Test according to subclause		Number of samples			
		1	**1**	**3**	**3**
9.1.4	Dimensions	X		X	X
9.2	Insulating properties and suitability for isolation	X			
9.3	Temperature rise and acceptable power dissipation		X		
9.5	Peak withstand current		X		
9.8	Degree of protection	X			
9.9	Resistance to heat		X		
9.10	Non-deterioration of contacts				X
9.11.1	Mechanical strength	X	X	X	X
9.11.2.1	Freedom from season cracking [a)]			X	
9.11.2.2	Resistance to abnormal heat and fire	X			
9.11.2.3	Resistance to rusting		X		

[a)] For fuse-holders with current-carrying parts made of rolled copper alloy with less than 83 % copper.

~~NOTE~~ Additional tests relating to special fuse systems which are mentioned in subsequent parts may be necessary. The number of samples depends on the system and the material.

IECNORM.COM : Click to view the full PDF of IEC 60269-1:2024 RLV

9.2 Verification of the insulating properties and of the suitability for isolation

9.2.1 Arrangement of the fuse-holder

In addition to the conditions of 9.1.4, the fuse-holder shall be fitted with fuse-links of the largest dimensions envisaged for the type of fuse-holder concerned.

When the fuse-base itself is depended upon for insulation, metal parts shall be placed at their fixing points in accordance with the conditions of installation of the fuse indicated by the manufacturer, and these parts shall be considered as part of the frame of the apparatus. Unless otherwise specified by the manufacturer, the fuse-base shall be fixed to a metal plate.

If the fuse-link is intended to be replaceable while live, the surfaces of the fuse-link, of the device for replacing it or of the fuse-carrier, if any, which may be touched in the course of a correct replacement, are considered as forming part of the fuse. Thus, these surfaces, if of insulating material, shall be provided with metal coverings connected during the tests to the frame of the apparatus; if of metal, they shall be connected direct to the frame.

If additional insulating means, for example, partition walls, are provided by the manufacturer, these insulating means shall be in position during the tests.

For the verification of the suitability of the fuse for isolation, it shall be in its normal open position, the fuse-link remaining inside the fuse-carrier, or the fuse-link, and, when applicable, the fuse-carrier shall be removed.

9.2.2 Verification of the insulating properties

9.2.2.1 Points of application of the test voltage

The test voltage for the verification of the insulating properties shall be applied

a) between live parts and the frame with the fuse-link and the device for replacing it or the fuse-carrier, if any, in position;

b) between the terminals when the fuse is in normal open position, the fuse-link remaining inside the fuse-carrier, or when the fuse-link and the device for replacing it or the fuse-carrier, if any, are removed;

c) between live parts of different polarity in the case of a multipole fuse-holder with fuse-links of the maximum dimensions intended for that fuse-holder inserted and the device(s) for replacing the fuse-link(s) or the fuse-carrier(s), if any, in position;

d) between live parts which, in the case of a multipole fuse-holder, can reach different potentials after the fuse-link has operated, with the fuse-carrier(s) or the device(s) for replacing the fuse-link(s) alone (without fuse-links) in position.

9.2.2.2 Value of test voltage

The values of test voltage are shown in Table 16 as a function of the rated voltage of the fuse-holder.

IECNORM.COM : Click to view the full PDF of IEC 60269-1:2024 RLV

Table 16 – Test voltage

Rated voltage U_n of the fuse-holder V		AC test voltage (RMS) V	DC test voltage V
AC and DC	Up to and including 60	1 000	1 415
	61 to 300	1 500	2 120
	301 to 690	1 890	2 670
	691 to 800	2 000	2 830
	801 to 1 000	2 200	3 110
DC only	1 001 to 1 500		3 820

9.2.2.3 Test method

9.2.2.3.1 The test voltage shall be applied progressively and maintained at its full value given in Table 16 for 1 min.

~~NOTE~~ The test voltage source should have a short-circuit current of at least 0,1 A at the setting corresponding to the test voltage on open circuit.

9.2.2.3.2 The fuse-holder shall be subjected to humid atmospheric conditions.

The humidity treatment shall be performed in a humidity cabinet containing air with a relative humidity maintained between 91 % and 95 %.

The temperature of the air, at the place where the sample is located, shall be maintained within 2 K of any convenient value T between 20 °C and 30 °C.

Before being placed in the humidity cabinet, the sample shall be brought to a temperature differing from the above-mentioned value T by not more than +2 K.

The sample shall be kept in the cabinet for 48 h.

Immediately after this treatment, and after wiping off any drops of water that result from condensation, the insulation resistance shall be measured between the points prescribed in 9.2.2.1 by applying a DC voltage of approximately 500 V.

9.2.3 Verification of the suitability for isolation

9.2.3.1 General

Clearances and creepage distances shall be verified by dimensional measurement and by voltage test.

9.2.3.2 Points of application of the test voltage

The test voltage for the verification of the suitability for isolation shall be applied between the terminals when the fuse-link and the device for replacing it or the fuse-carrier, if any, are removed, or the equipment is in its normal open position with the fuse-link remaining inside the fuse-carrier.

9.2.3.3 Value of test voltage

The test voltage for the verification of the rated impulse withstand voltage is given in Table 17.

IECNORM.COM : Click to view the full PDF of IEC 60269-1:2024 RLV

Table 17 – Test voltage across the poles for the verification of the suitability for isolation

Rated impulse withstand voltage U_{imp} kV	Test voltages and corresponding altitudes $U_{1,2/50}$ kV				
	Sea level	200 m	500 m	1000 m	2000 m
0,8	1,8	1,7	1,7	1,6	1,5
1,5	2,3	2,3	2,2	2,2	2
2,5	3,5	3,5	3,4	3,2	3
4,0	6,2	6,0	5,8	5,6	5
6,0	9,8	9,6	9,3	9,0	8
8,0	12,3	12,1	11,7	11,1	10
12,0	18,5	18,1	17,5	16,7	15

9.2.3.4 Test method

The 1,2/50 µs impulse voltage according to Table 17 shall be applied five times for each polarity at intervals of 1 s minimum.

9.2.4 Acceptability of test results

9.2.4.1 Throughout the application of the test voltage according to Table 16, there shall be no breakdown of insulation or flashover. Glow discharges unaccompanied by a drop in voltage can be neglected.

There shall be no disruptive discharge during the test with the impulse voltage.

9.2.4.2 The insulation resistance measured according to 9.2.2.3.2 shall be not less than 1 MΩ.

9.3 Verification of temperature rise and power dissipation

9.3.1 Arrangement of the fuse

One fuse shall be used for the test unless otherwise stated by the manufacturer.

The fuse shall be mounted in free air as specified in 9.1.4 in order to make sure that the test results are not influenced by particular conditions of installation.

The test shall be performed at an ambient air temperature of (20 ± 5) °C.

The connections on either side of each single fuse shall be not less than 1 m in length. In cases where it might be necessary or desirable to arrange more than one fuse in a combined test, the fuses may be connected in series. This would result in a total length of about 2 m between two fuse terminals in series. The cable should be as straight as possible.

Unless specified in subsequent parts, the cross-sectional area shall be selected in accordance with Table 18. For rated currents up to 400 A, single-core copper-conductor cables insulated with black polyvinyl chloride (PVC) shall be used as connections. For rated currents of 500 A to 800 A, either single-core copper conductors insulated with black PVC or bare copper bars ~~may~~ can be used. For higher rated currents, matt black painted copper bars only are used. Torques for the screws connecting the cables to the terminals are given in subsequent parts.

IECNORM.COM : Click to view the full PDF of IEC 60269-1:2024 RLV

9.3.2 Measurement of the temperature rise

The values of the temperature rise given in Table 6 for the contacts and terminals of the fuse shall be determined by means of measuring devices that appear most suitable, provided that the measuring device cannot appreciably influence the temperature of the fuse part. The method used shall be indicated in the test report.

9.3.3 Measurement of the power dissipation of the fuse-link

The fuse-link shall be mounted in the fuse-holder or test rig as specified in subsequent parts. The test arrangement shall be as specified in 9.3.1.

The power dissipation shall be measured in watts, the points between which the measurement is taken being chosen on the fuse-link so as to give the maximum value. Points for the measurement are given in subsequent parts.

9.3.4 Test method

9.3.4.1 General

The tests (see 9.3.4.2 and 9.3.4.3) shall be continued until it becomes evident that the temperature rise would not exceed the specified limits if the tests were continued until a steady temperature were reached. A steady temperature shall be deemed to have been reached when the variation does not exceed 1 K per hour. The measurement shall be made during the last quarter hour of the test. It is permissible to make the test at reduced voltage.

9.3.4.2 Temperature rise of the fuse-holder

The test for temperature rise shall be made with AC by using a fuse-link which, at the rated current of the fuse-holder, attains a power dissipation equivalent to the rated acceptable power dissipation of the fuse-holder or with a dummy fuse-link where specified in subsequent parts. The current applied shall be the rated current of the fuse-holder.

9.3.4.3 Power dissipation of a fuse-link

The test shall be made with AC at the rated current of the fuse-link.

IECNORM.COM : Click to view the full PDF of IEC 60269-1:2024 RLV

Table 18 – Cross-sectional area of copper conductors for tests corresponding to Subclauses 9.3 and 9.4

Rated current A	Cross-sectional area mm^2 or mm × mm
2	1
4	1
6	1
8	1,5
10	1,5
12	1,5
13	1,5
16	2,5
20	2,5
25	4
32	6
35	6
40	10
50	10
63	16
80	25
100	35
125	50
160	70
200	95
224	95
250	120
315	185
355	185
400	240
425	240
500	~~2 × 150 or 2 × (30 × 5)~~ 2 × 185 or 2 × (40 x 5) [a)]
630	~~2 × 185 or 2 × (40 x 5)~~ 2 × 240 or 2 × (50 × 5) [a)]
800	~~2 × 240 or 2 × (50 × 5)~~ 2 × (60 × 5) [a)]
1 000	~~2 × (60 × 5)~~ 2 × (80 × 5) [a)]
1 250	~~2 × (60 × 5)~~ 2 × (80 × 5) [a)]
1 600	2 × (100 × 5) [a)]

[a)] Recommended cross-sectional areas for fuses designed to be connected to copper bars. The type and arrangement of the connections used shall be stated in the test report. For matt black painted bars, the distance between the two parallel bars of the same polarity should be approximately 5 mm.

~~NOTE~~ The values given in Table 18, as well as the temperature-rise limits fixed in Table 6, should be considered as a convention which is valid for the temperature-rise test specified in

IECNORM.COM : Click to view the full PDF of IEC 60269-1:2024 RLV

9.3.4. A fuse used or tested according to conditions which correspond to a given installation may have connections of a type, nature and disposition which are different from these test conditions. In consequence, another temperature-rise limit may result, be required or accepted.

9.3.5 Acceptability of test results

The temperature rises shall not exceed the values specified in Table 6.

The power dissipation of the fuse-link shall not exceed its rated power dissipation or the value specified in subsequent parts. The acceptable power dissipation of the fuse-holder shall be not less than the rated power dissipation of the fuse-links intended to be used in that fuse-holder, or the values specified in subsequent parts.

After the test, the fuse shall be in a satisfactory condition. In particular, the insulating parts of the fuse-holders shall withstand the test voltage according to 9.2 after having cooled down to ambient temperature (see Table 16); in addition, they shall not have suffered any deformation that would impair their correct operation.

9.4 Verification of operation

9.4.1 Arrangement of the fuse

The test arrangement is that specified in 9.1.4.

Length and cross-sectional area of conductors connected shall correspond to those specified in 9.3.1 and shall be selected according to the rated current of the fuse-link. See Table 18.

9.4.2 Ambient air temperature

The ambient air temperature during these tests shall be (20 ± 5) °C.

9.4.3 Test method and acceptability of test results

9.4.3.1 Verification of conventional non-fusing and fusing current

It is permissible to make the following tests at a reduced voltage.

a) The fuse-link is subjected to its conventional non-fusing current (I_{nf}) for a time equal to the conventional time specified in Table 3. It shall not operate during this time.

b) The fuse-link, after having cooled down to ambient temperature, is subjected to the conventional fusing current (I_f). It shall operate within the conventional time as specified in Table 3.

9.4.3.2 Verification of rated current of "g" fuse-links

For the verification of the rated current of a fuse-link the following tests are performed, the fuse being mounted as specified in 9.4.1. It is permissible to make these tests at a reduced voltage.

One fuse-link is submitted to a pulse test for 100 h, in which the fuse-link will be cyclically loaded. Each cycle with an on-period of the conventional time and an off-period of 0,1 of the conventional time, the test current being equal to 1,05 of the rated current of the fuse-link. After the test the fuse-link shall not have changed its characteristics. Verification shall be carried out by the test as described in item a) of 9.4.3.1.

IECNORM.COM : Click to view the full PDF of IEC 60269-1:2024 RLV

9.4.3.3 Verification of time-current characteristics and gates

9.4.3.3.1 Time-current characteristics

The time-current characteristics may be verified on the basis of the results obtained from the oscillographic records taken during the performance of the test according to 9.5.

The following periods are determined:

1) from the instant of closing the circuit until the instant when the voltage measurement shows the beginning of the arc;
2) from the instant of closing the circuit until the instant when the circuit is definitely broken.

The values of pre-arcing and operating times so determined, referred to the abscissa corresponding to the value of prospective current, shall be within the time-current zone indicated by the manufacturer, or specified in subsequent parts.

When for the fuse-links of a homogeneous series (see 9.1.6.3) the complete test according to 9.5 is only made on that fuse-link having the largest rated current, it shall be sufficient for the smaller current ratings to verify only the pre-arcing time. In this case, the supplementary tests shall be made at an ambient air temperature of (20 ± 5) °C and at the following values of prospective current only:

– for "g" fuse-links, with the exception of "gD", "gG" and "gM", as adequate tests are carried out in connection with verification of the gates (see 9.4.3.3.2):

  test 3a) between 10 and 20 times;

  test 4a) between 5 and 8 times;

  test 5a) between 2,5 and 4 times the rated current of the fuse-link;

– for "a" fuse-links:

  test 3a) between 5 k_2 and 8 k_2 times;

  test 3b) between 2 k_2 and 3 k_2 times;

  test 5a) between k_2 and 1,5 k_2 times the rated current of the fuse-link (see Figure 2).

These supplementary tests may be performed at a reduced voltage. In this case, where the pre-arcing time exceeds 0,02 s, the value of the current measured during the test shall be considered to be the value of the prospective current.

9.4.3.3.2 Verification of gates

The following tests may be made at a reduced voltage. Additional to the above-mentioned tests, the following shall be verified for "gG" and "gM" fuse-links.

a) A fuse-link is subjected to the current of Table 4, column 2 for 10 s. It shall not operate.
b) A fuse-link is subjected to the current of Table 4, column 3. It shall operate within 5 s.
c) A fuse-link is subjected to the current of Table 4, column 4 for 0,1 s. It shall not operate.
d) A fuse-link is subjected to the current of Table 4, column 5. It shall operate within 0,1 s.

Additional to the tests of 9.4.3.3.1, "aM" fuse-links shall comply the following tests which can be made at a reduced voltage.

e) A fuse-link is subjected to the current of Table 5, column 2, for 60 s. It shall not operate.
f) A fuse-link is subjected to the current of Table 5, column 3. It shall operate within 60 s.
g) A fuse-link is subjected to the current of Table 5, column 5, for 0,2 s. It shall not operate.
h) A fuse-link is subjected to the current of Table 5, column 7. It shall operate within 0,10 s.

IECNORM.COM : Click to view the full PDF of IEC 60269-1:2024 RLV

~~NOTE~~ Tests f) and g) may be verified with the breaking capacity tests Nos. 4 and 5, respectively.

These tests for "aM" fuses shall be conducted with the conductor cross-section areas defined in Table 19.

Table 19 – Cross-section areas of the copper conductors for the test of "aM" fuses

Rated current A	Cross-section area mm^2 or mm × mm
2	1,5
4	1,5
6	1,5
8	2,5
10	2,5
12	2,5
16	4
20	6
25	10
32	16
35	16
40	25
50	25
63	35
80	50
100	70
125	95
160	120
200	185
250	240
315	2 × 150 or 2 × (30 × 5)
400	2 × 185 or 2 × (40 x 5)
500	2 × 240 or 2 × (50 × 5)
630	2 × (60 × 5)
800	2 × (80 × 5)
1 000	2 × (100 × 5)
1 250	2 × (100 × 5)

IECNORM.COM : Click to view the full PDF of IEC 60269-1:2024 RLV

9.4.3.4 Overload

The test arrangement is the same as that for the temperature-rise test (see 9.3.1). Three fuse-links shall be submitted to 50 pulses having the same duration and the same test current.

For "g" fuse-links, the test current shall be 0,8 times the current determined from the manufacturer's minimum pre-arcing time-current characteristics for a pre-arcing time of 5 s. The duration of each pulse shall be 5 s and the time interval between pulses shall be 20 % of the conventional time specified in Table 2.

For "a" fuse-links, the test current shall be equal to $k_1 I_n$ ± 2 %. The pulse duration shall correspond to that indicated on the overload curve for $k_1 I_n$ as stated by the manufacturer. The intervals between pulses shall be 30 times the pulse duration.

This test may be carried out at a reduced voltage.

NOTE With the manufacturer's consent, the interval between pulses may be reduced.

After having been allowed to cool down to ambient air temperature, the fuse-links shall be subjected to a current equal to that used during the overload test. The pre-arcing time, when passing this current, shall be shown to lie within the manufacturer's time-current zone.

9.4.3.5 Conventional cable overload protection test (for "gG" fuse-links only)

In order to verify that fuse-links are capable of protecting cables against overload, one fuse-link is submitted to the following conventional test. The fuse-link is mounted in its appropriate fuse-holder or test rig as specified in 9.4.1, but provided with PVC insulated copper conductors of a cross-sectional area as specified in Table 20. The fuse and the conductor connected to it shall be preheated with the rated current of the fuse-link for a time equal to the conventional time.

The test current is then increased to a value of 1,45 I_z (I_z being specified in Table 20). The fuse-link shall operate in a time less than the conventional time.

NOTE It is not necessary to perform this test if the product 1,45 I_z is greater than the conventional fusing current.

This test may be carried out at a reduced voltage.

Table 20 – Table for test in Subclause 9.4.3.5

I_n of fuse-link A	Nominal cross-sectional area of copper conductors mm²	I_z [a] A
12	1	15
16 [b]	1,5	19,5
20 [b] and 25	2,5	27
32 [b] and 35	4	36
40 [b]	6	46
50 [b] and 63	10	63
80	16	85
100 [b]	25	112
125 [b]	35	138
160	50	168
200	70	213
250 [b]	120	299
315 [b]	185	392
400 [b]	240	461

[a] Current-carrying capacity I_z for two loaded conductors (see Table A52-2 of IEC 60364-5-52:2001).

[b] For this current rating it is not necessary to perform this test as the product 1,45 I_z is greater than the conventional fusing current I_f.

IECNORM.COM : Click to view the full PDF of IEC 60269-1:2024 RLV

9.4.3.6 Operation of indicating devices and striker, if any

The correct operation of indicating devices is verified in combination with the verification of breaking capacity (see 9.5.5).

For verifying the operation of strikers, if any, an additional test sample shall be tested at a current:

– I_4 (see Table 21 and Table 22) in the case of "g" fuse-links;

– 2 $k_1 I_n$ in the case of "a" fuse-links (see Figure 2);

and at a recovery voltage of:

– 20 V for rated voltages not exceeding 500 V;

– 0,04 U_n for rated voltages exceeding 500 V.

The values of the recovery voltage may be exceeded by 10 %.

The striker shall operate during all tests made at a recovery voltage of

– at least 20 V.

If during one of these tests, the indicating device or striker fails, the test shall not be considered as negative on this account, if the manufacturer can furnish evidence that such failure is not typical of the fuse type, but it is due to a fault of the individual tested sample.

9.5 Verification of the breaking capacity

9.5.1 Arrangement of the fuse

The test arrangement is that specified in 9.1.5.

Suitable conductors shall be arranged for a length of approximately 0,2 m on either side of the complete fuse in the plane of the connecting device and in the direction of the connecting line between the terminals of the fuse. At this distance, they shall be rigidly supported. Beyond this point, they shall be bent at right angles towards the back. This arrangement is considered to be met when using test rigs as specified in subsequent parts.

9.5.2 Characteristics of the test circuit

The test circuit is shown by way of example in Figure 5.

The test circuit shall be of the single-pole type, i.e. one fuse shall be tested at a voltage based on its rated voltage.

NOTE The single-phase test is deemed to give sufficient information also for application in three-phase circuits.

The source of energy supplying the test circuit shall be of sufficient power to enable the specified characteristics to be proved.

The source of energy shall be protected by a circuit-breaker or other suitable apparatus D; an adjustable resistor R in series with an adjustable inductor L shall allow the characteristics of the test circuit to be adjusted. The circuit shall be closed by means of a suitable apparatus C.

IECNORM.COM : Click to view the full PDF of IEC 60269-1:2024 RLV

The values to be considered are indicated in Table 21 and Table 22.

– For AC:

  When the rated frequency of the fuse is 50 Hz or 60 Hz or is not indicated (see 5.4), the test shall be made at a supply frequency between 45 Hz and 62 Hz. If other frequencies are indicated, the tests shall be performed at these frequencies with a tolerance of ±20 %.

  The inductor L shall be an air-cored inductor for tests nos. 1 and 2.

  The peak value of the power-frequency recovery voltage within the first full half-cycle after clearing and for the next five successive peaks shall correspond to the peak value relating to the RMS value specified in Table 21.

– For DC:

  Breaking capacity tests shall be made with DC on an inductive circuit with series resistance for the adjustment of the prospective current. The inductance can be made up by series and parallel connection of suitable inductance coils. They may have iron cores, provided they do not saturate during the test.

  The time constant shall lie between the limits indicated in Table 22.

  The mean value of DC recovery voltage during 100 ms after final arc extinction shall be not less than the value specified in Table 22.

9.5.3 Measuring instruments

The current trace shall be recorded by one of the measuring circuits O_1 of an oscillograph connected to the terminals of an appropriate measuring device. Another measuring circuit O_2 of the oscillograph shall be connected by means of resistors or a voltage transformer, as the case may be, to the terminals of the source of energy during the calibration test, and to the terminals of the fuse during the test of the latter.

The arc voltages occurring during tests nos. 1 and 2 shall be measured by means of a measuring circuit (i.e. transducer, transmission and recording device) which has adequate sensitivity and frequency response. An oscillograph may be used provided it meets these requirements.

9.5.4 Calibration of test circuit

The test circuit shall be calibrated with a provisional connection A of a negligible impedance compared with that of the test circuit (see Figure 5) in place of the fuse to be tested.

The resistors R and the inductors L shall be so adjusted as to obtain at the desired instant the desired value of current, and,

– in the case of AC, the desired power factor at a power-frequency recovery voltage $105\,^{+5}_{0}$ % of the rated voltage for a 690 V fuse and $110\,^{+5}_{0}$ % of the rated voltage for all other fuses.

  The power factor shall be determined by one of the methods specified in Annex A or by other methods giving improved accuracy;

– in the case of DC, the desired time constant at a mean value of recovery voltage $115\,^{+5}_{-9}$ % of the rated voltage of the fuse to be tested.

IECNORM.COM : Click to view the full PDF of IEC 60269-1:2024 RLV

Table 21 – Values for breaking-capacity tests on AC fuses

		Test according to 9.5.5.1				
		No. 1	**No. 2**	**No. 3**	**No. 4**	**No. 5**
Power-frequency recovery voltage		105 $^{+5}_{0}$ % of the rated voltage for the rated voltage of 690 V [a)] 110 $^{+5}_{0}$ % of the rated voltage for other rated voltages [a)]				
Prospective test current	For "g" fuse-links	I_1	I_2	I_3 = 3,2 I_f	I_4 = 2,0 I_f	I_5 = 1,25 I_f
	For "a" fuse-links			I_3 = 2,5 $k_2 I_n$	I_4 = 1,6 $k_2 I_n$	I_5 = $k_2 I_n$
Tolerance on current		$^{+10}_{0}$ % [a)]	Not applicable	±20 %	$^{+20}_{0}$ %	
Power factor		0,2 to 0,3 for prospective current up to and including 20 kA 0,1 to 0,2 for prospective current above 20 kA	0,2 to 0,3 for prospective current up to and including 20 kA 0,1 to 0,2 for prospective current above 20 kA	0,3-0,5 [b)]		
Making angle after voltage zero		Not applicable	0 $^{+20}_{0}$ °	Not specified		
Initiation of arcing after voltage zero [c)]		For one test: 40°-65°; for two more tests: 65°-90°	Not applicable	Not applicable		

a) This tolerance may be exceeded with the manufacturer's consent.

b) Power factors lower than 0,3 may be permitted with the manufacturer's consent.

c) Where difficulty is experienced in meeting the requirement for initiation of arcing between 40° and 65° after voltage zero, a test shall be performed with a making angle after voltage zero of 0 $^{+10}_{0}$ °.

If, on this test, arcing is initiated at an angle of more than 65° after voltage zero, then the test shall be accepted in lieu of that meeting the 40° to 65° requirements for start of arcing. Should, however, arcing be initiated at an angle of less than 40° after voltage zero, then the three tests specified in the table shall be achieved.

I_1: current which is used in the designation of the rated breaking capacity (see 6.7).

I_2: current which shall be chosen in such a manner that the test is made under conditions which approximate those giving maximum arc energy.

NOTE This condition may be deemed to be satisfied if the instantaneous value of the current at the beginning of arcing has reached a value between 0,60 $\sqrt{2}$ and 0,75 $\sqrt{2}$ times the prospective current (RMS value of the AC component).

As guide for practical application, the value of current I_2 may be found between three and four times the current (symmetrical RMS value) which corresponds to a pre-arcing time of one half-cycle.

I_3, I_4, I_5: the tests made with these test currents are deemed to verify that the fuse is able to operate satisfactorily in the range of small overcurrents.

I_f: conventional fusing current (see 9.4.3.1) for the conventional time indicated in Table 2.

k_2: see Figure 2 and Figure 3.

IECNORM.COM : Click to view the full PDF of IEC 60269-1:2024 RLV

Table 22 – Values for breaking-capacity tests on DC fuses

	Test according to 9.5.5.1				
	No. 1	**No. 2**	**No. 3**	**No. 4**	**No. 5**
Mean value of recovery voltage [a]	$115\ ^{+5}_{-9}$ % of the rated voltage [b]				
Prospective test current	I_1	I_2	$I_3 = 3{,}2\ I_f$	$I_4 = 2{,}0\ I_f$	$I_5 = 1{,}25\ I_f$
Tolerance on current	$^{+10}_{0}$ % [b]	Not applicable	±20 %	$^{+20}_{0}$ %	
Time constant [b]	If the prospective current is higher than 20 kA: 15 ms to 20 ms If the prospective current is equal to or less than 20 kA: 0,5 $(I)^{0,3}$ ms with a tolerance of $^{+20}_{0}$% [b] (value I in A).				

[a] This tolerance includes ripple.

[b] With the manufacturer's consent this value may be exceeded.

I_1: current which is used in the designation of the rated breaking capacity (see 5.7).

I_2: current which shall be chosen in such a manner that the test is made under conditions which approximate those giving maximum arc energy.

NOTE This condition may be deemed to be satisfied if the current at the beginning of arcing has reached a value between 0,5 and 0,8 times the prospective current.

I_3, I_4, I_5: the tests made with these test currents are deemed to verify that the fuse is able to operate satisfactorily in the range of small overcurrents.

I_f: conventional fusing current (see 9.4.3.1) for the conventional time indicated in Table 2.

The value of the time constant is deemed to be given by the abscissa OA (see Figure 7a) of the point of the current trace corresponding to 0,632 I.

Where iron core inductors are used, the above method may give misleading results due to residual magnetism of the core. In such cases, the inductor may be energized at the required test current via a series resistor and the inductor short-circuited via the test-circuit to measure the time taken for the current to fall to 0,368 I. The supply circuit shall be disconnected immediately after the inductor is short-circuited.

The test circuit may be calibrated at reduced voltage, provided that the ratio between the voltage and the current in the test circuit is ensured.

The circuit shall be prepared by closing the apparatus D, the time lag of which is so adjusted as to allow an approximately steady value of current to be reached before it opens; apparatus C shall then be closed and the current trace recorded by measuring circuit O_1, and the voltage trace before the closing of apparatus C and after the opening of apparatus D recorded by measuring circuit O_2.

The value of current shall be computed from the oscillogram in Annex A. Annex A is given as an example.

9.5.5 Test method

9.5.5.1 In order to verify that the fuse-link satisfies the conditions of 8.5, tests nos. 1 to 5 as described below shall be made with the values stated in Table 21 for AC and in Table 22 for DC (see 9.5.2), if not otherwise specified in subsequent parts.

IECNORM.COM : Click to view the full PDF of IEC 60269-1:2024 RLV

Tests nos. 1 and 2:

For each of these tests, the required samples shall be tested in succession.

For AC, if during test no. 1 the requirements of test no. 2 are met during one or more tests, then these tests need not be repeated as part of test no. 2.

For DC, if during test no. 1 arcing commences at a current equal to or greater than 0,5 I_1, test no. 2 need not be performed.

For AC, if the prospective current necessary to comply with the requirements of test no. 2 is greater than the rated breaking capacity, tests nos. 1 and 2 shall be replaced by a test made with the current I_1, on six samples at six making angles which differ approximately 30° between each test.

To verify the peak withstand current of a fuse-holder, test no. 1 shall be made on a complete assembly of fuse-base and fuse-link (see 9.1.6) without or with fuse-carrier, where applicable. For these tests, the initiation of arcing ~~should~~ shall be between 65° and 90° after voltage-zero.

Tests no. 3 to 5:

For each of the tests, when performed with AC, the closing of the circuit in relation to the passage of the voltage through zero may be at any instant.

If the testing arrangement does not permit the current to be maintained at the full voltage during all of the time required, the fuse may be pre-heated at reduced voltage by applying a current approximately equal to the value of the test current. In this case, switching over to the test circuit according to 9.5.2 shall take place before the arc is initiated, and the switching time t_1 (interval without current) shall not exceed 0,2 s. The time interval between reapplication of the current and beginning of arcing shall be not less than three times t_1.

9.5.5.2 For one of the three tests no. 2 and test no. 4, the recovery voltage shall be maintained at a value of

– $100\,^{+10}_{0}$ % for fuse rated 690 V and $100\,^{+15}_{0}$ % for all other fuses,

– $100\,^{+20}_{0}$ % of the rated voltage for DC,

for at least:

– 30 s after operation of fuse-links not containing organic materials in their body or filler;
– 5 min after operation of the fuse-links in all other cases, switching over to another source of supply being permitted after 15 s if the switching time (interval without voltage) does not exceed 0,1 s.

For all other tests, the recovery voltage shall be maintained at the same value for 15 s after operation of the fuse.

In a lapse of time of at least 6 min and maximum 10 min after the operation (with the manufacturer's consent shorter times are possible, if the fuse-link does not contain organic materials in its body or filler) the resistance between the contacts of the fuse-link shall be measured (see 9.5.8) and noted.

IECNORM.COM : Click to view the full PDF of IEC 60269-1:2024 RLV

9.5.6 Ambient air temperature

If the test results are also to be used for the verification of the time-current characteristics (see 9.4.3.3), the breaking-capacity tests shall be made at ~~an~~ ambient air temperature of (20 ± 5) °C.

If these limits cannot be adhered to, it is permissible to make the breaking-capacity tests at an ambient air temperature between −5 °C and +40 °C. In this case, however, tests nos. 4 and 5 of Table 21 and Table 22 shall be repeated at an ambient-air temperature of (20 ± 5) °C with reduced voltage in order to verify the pre-arcing time-current characteristics.

9.5.7 Interpretation of oscillograms

Figure 6 and Figure 7 give, by way of example, the method of interpreting the oscillograms in the different cases.

The recovery voltage shall be determined from the oscillogram corresponding to the fuse tested, and shall be evaluated as shown in Figure 6b) and Figure 6c) for AC and Figure 7b) and Figure 7c) for DC.

The value of the AC recovery voltage shall be measured between the peak of the second non-influenced half-wave and the straight line drawn between the peaks of the preceding and following half-waves.

The value of the DC recovery voltage shall be measured as the mean value during the period of 100 ms after final arc extinction.

In order to determine the value of prospective current, the current trace obtained during the calibration of the circuit (Figure 6a for AC and Figure 7a for DC) shall be compared with that obtained in the breaking test (Figure 6b and Figure 6c for AC, Figure 7b and Figure 7c for DC).

For AC the value of prospective current is the RMS value of the alternating component of the calibration curve corresponding to the instant of initiation of the arc.

If the time between the instant when the circuit is closed and the instant when the arc is initiated is shorter than one-half cycle, the value of prospective current shall be measured after a time lapse equal to a half-cycle.

For DC, where cut-off does not occur, the value of prospective current shall be measured from the calibration oscillogram at the instant corresponding to the initiation of the arc. Where ripple is present, the RMS curve shall be drawn and the value of this curve corresponding to the instant of initiation of the arc is considered as the prospective current.

Where cut-off occurs, the value of prospective current is the maximum steady value obtained from the calibration oscillograms. Where ripple is present, the RMS curve shall be drawn, and the maximum value of this curve is considered as the prospective current.

9.5.8 Acceptability of test results

The arc voltage occurring during operation of the fuse-link in tests nos. 1 and 2 shall not exceed the values stated in Table 7.

The fuse-link shall operate without external effects or damage to the components of the complete fuse beyond those specified below.

There shall be no permanent arcing, flashover or any ejection of flames which may be dangerous to the surroundings.

IECNORM.COM : Click to view the full PDF of IEC 60269-1:2024 RLV

After operation, the components of the fuse, with the exception of those intended to be replaced after each operation, shall not have suffered damage capable of hindering their further use.

Fuse-links shall not be so damaged that their replacement might be difficult or dangerous for the operator. The fuse-links or their parts may have changed their colour or may show cracks, provided that the fuse-link remains in one piece before its removal from the fuse-carrier or test rig.

The resistance between fuse-link contacts measured after each test (see 8.5.5.2) with a DC voltage of approximately 500 V shall be equal to at least:

– 50 000 Ω when the rated voltage of the fuse-link does not exceed 250 V;
– 100 000 Ω in all other cases.

9.6 Verification of the cut-off current characteristics

9.6.1 Test method

If the manufacturer has stated the cut-off current characteristic, this characteristic shall be verified for the prospective current in connection with test no. 1 (see 9.5), and the corresponding value shall be computed from the oscillograms.

9.6.2 Acceptability of test results

The values measured shall not exceed those indicated by the manufacturer (see 6.8.2).

9.7 Verification of I^2t characteristics and overcurrent selectivity

9.7.1 Test method

The I^2t characteristics indicated by the manufacturer shall be verified from the results of the breaking-capacity test, or can be given by a calculation based on measured values taking into account service conditions (see Annex B).

9.7.2 Acceptability of test results

The operating I^2t values measured shall not exceed the values indicated by the manufacturer or specified in subsequent parts. The pre-arcing I^2t values shall be not less than the minimum pre-arcing values given by the manufacturer, or they shall lie within the limits indicated in Table 8 (see 6.8.3 and Annex B).

The operating I^2t values given by the breaking capacity tests can be used to calculate values for other voltages using the formula in Clause B.3.

9.7.3 Verification of compliance for fuse-links at 0,01 s

Compliance with Table 8 is determined from the pre-arcing I^2t values obtained from the test during I_2 and the pre-arcing I^2t values at 0,1 s as shown in Clause B.1.

The pre-arcing I^2t values for test duty I_2 for the smaller current ratings of a homogeneous series can be calculated from the formula given in Clause B.2.

IECNORM.COM : Click to view the full PDF of IEC 60269-1:2024 RLV

9.7.4 Verification of overcurrent selectivity

The selectivity of the fuse-links is verified by means of the time-current characteristics and the pre-arcing and operating I^2t values.

NOTE In most cases selectivity between "gG" and/or "gM" fuses occurs on prospective currents giving pre-arcing times greater than 0,01 s. Compliance with the values of pre-arcing I^2t given in Table 8 is deemed to ensure a selectivity with ratio 1,6 to 1 between rated currents for these times.

9.8 Verification of the degree of protection of enclosures

If the fuse is fitted in an enclosure, the degree of protection as specified in 6.1.3 shall be verified under the conditions stated in IEC 60529.

9.9 Verification of resistance to heat

If not otherwise specified in subsequent parts, the resistance to heat is judged by the results of all operating tests, in particular with respect to 9.3, 9.4, 9.5 and 9.10.

9.10 Verification of non-deterioration of contacts

9.10.1 General

By means of a test representing severe service conditions, it shall be verified that contacts do not deteriorate when left undisturbed in service for a long period.

9.10.2 Arrangement of the fuse

This test shall be performed on three samples. The test samples are arranged in the test circuit in such a way that they cannot influence each other. The test arrangement and the dummy fuse-links shall be the same as used for verification of temperature rise and power dissipation (see 9.1.5, 9.3.1 and 9.3.4.2).

The samples are provided with standardized dummy fuse-links of the highest current rating intended to be used in the fuse-holder (see subsequent parts).

9.10.3 Test method

A test cycle consists of a load period and a no-load period referred to the conventional time. The test current for the load period and the no-load period are specified in subsequent parts.

The test samples are submitted to a first test of 250 cycles. If the test results are satisfactory after this, the test is stopped. If the test results exceed the specified limits, the test is continued up to 750 cycles.

Before the beginning of the cycling test, the temperature rise and/or the voltage drop of the contacts as specified in subsequent parts shall be measured at rated current when steady-state conditions have been obtained. The test shall be repeated after 250 cycles and, if necessary, after 750 cycles.

If the fuses are so small that reliable measurements on the contacts could not be expected, the measurement at the terminals may be used as the criteria for the test.

9.10.4 Acceptability of test results

After 250 cycles, and if necessary, after 750 cycles, the measured values shall not exceed the limits given in subsequent parts.

IECNORM.COM : Click to view the full PDF of IEC 60269-1:2024 RLV

9.11 Mechanical and miscellaneous tests

9.11.1 Mechanical strength

If not otherwise specified in the subsequent parts, the mechanical characteristics of a fuse and its parts are judged in the context of normal handling and mounting as well as with the results shown after the breaking-capacity test (see 9.6).

9.11.2 Miscellaneous tests

9.11.2.1 Verification of freedom from season cracking

In order to verify that current-carrying parts made of rolled copper alloy with less than 83 % copper content are free from season cracking, the following test is performed.

All grease is removed from three samples by immersing them for 10 min in a suitable solution. Fuse-links are tested individually, while fuse-holders are only tested with the complete fuse.

The samples shall be placed for 4 h in a test cabinet having a temperature of (30 ± 10) °C.

After this, samples are placed for 8 h in a test cabinet, on the bottom of which is an ammonium chloride solution having a pH value of 10 to 11.

For a 1 l ammonium chloride solution the proper pH value may be achieved as follows.

> 107 g ammonium chloride (NH_4Cl p.a.) is mixed with 0,75 l of distilled water and made up to 1 l by adding 30 % sodium hydroxide (prepared from NaOH AR grade and distilled water). The pH value does not vary. The measurements of the pH value shall be made with a glass electrode.

The ratio of the volume of the test cabinet to that of the solution shall be 20:1.

The samples shall show no cracks visible to the unaided eye when any bluish film is removed by means of a dry cloth. Contact caps of fuse-links shall not be removable by hand.

9.11.2.2 Verification of resistance to abnormal heat and fire

9.11.2.2.1 General

If not otherwise specified in subsequent parts, the following applies. Parts of insulating materials, except ceramic, not necessary to retain current-carrying parts in position even though they are in contact with them are tested according to item a) of 9.11.2.2.6.

~~NOTE~~ Enclosures which are a part of a fuse should be tested in the same manner as the fuse. In other cases, the enclosure should be tested in accordance with IEC 60529.

Parts of insulating materials, except ceramic, necessary to retain current-carrying parts and parts of the earthing circuit, if any, in position are tested according to item b) of 9.11.2.2.7.

9.11.2.2.2 General description of the test

The test is applied to ensure that

– a specified loop of resistance wire, which is electrically heated to the temperature specified for the relevant equipment, does not cause ignition of parts of insulating material;
– a part of insulating material, which might be ignited by the electrically heated test wire under defined conditions, has a limited duration of burning, without spreading fire by flames or burning droplets or glowing particles falling from the specimen.

IECNORM.COM : Click to view the full PDF of IEC 60269-1:2024 RLV

The test is made on the specimen. In the case of doubt with regard to the results of the test, the test is repeated on two further specimens.

9.11.2.2.3 Description of test apparatus

The glow-wire consists of a specified loop of a nickel/chromium (80/20) wire; when forming the loop, care needs to be taken to avoid fine cracking at the tip.

A sheathed fine-wire thermocouple, having an overall diameter of 0,5 mm and wires of chromel and alumel with the welding point located inside the sheath, is used for measuring the temperature of the glow-wire.

The glow-wire, with the thermocouple, is shown in Figure 8.

The sheath consists of a metal resistant to a temperature of at least 960 °C. The thermocouple is arranged in a pocket hole, 0,6 mm in diameter, drilled in the tip of the glow-wire, as shown in detail Z of Figure 8 of IEC 60584-1. The thermo-voltages shall comply with IEC 60584-1; the characteristics given in IEC 60584-1 are practically linear. The cold connection shall be kept in melting ice unless a reliable reference temperature is obtained by other means, for example, by a compensation box. The instrument for measuring the electromotive force of the thermocouple should be of class 0,5.

The glow-wire is electrically heated; the current necessary for heating the tip to a temperature of 960 °C is between 120 A and 150 A.

The test apparatus shall be so designed that the glow-wire is kept in a horizontal plane and that it applies a force of 1 N to the specimen, the force being maintained at this value when the glow-wire and the specimen are moved horizontally towards each other over a distance of at least 7 mm.

A piece of white pinewood board, approximately 10 mm thick and covered with a single layer of tissue paper, is positioned at a distance of 200 mm below the place where the glow-wire is applied to the specimen.

Tissue paper is specified in 6.86 of ISO 4046 as thin, soft, relatively tough paper generally intended for packing delicate articles, its substance being between 12 g/m^2 and 30 g/m^2.

An example of the test apparatus is shown in Figure 9.

9.11.2.2.4 Pre-conditioning

The specimen is stored for 24 h in an atmosphere having a temperature between 15 °C and 35 °C and a relative humidity between 35 % and 75 % before starting the test.

9.11.2.2.5 Test procedure

The test apparatus is placed in a substantially draught-free dark room so that flames occurring during the test are visible.

Before starting the test, the thermocouple is calibrated at a temperature of 960 °C, which is carried out by placing a foil of silver, 99,8 % pure, 2 mm square and 0,06 mm thick, on the upper face of the tip of the glow-wire.

The glow-wire is heated and a temperature of 960 °C is reached when the silver foil melts. After some time calibration has to be repeated to compensate for alterations in the thermocouple and in the connections. Care should be taken to ensure that the thermocouple can follow the movement of the tip of the glow-wire caused by thermal elongation.

IECNORM.COM : Click to view the full PDF of IEC 60269-1:2024 RLV

For the test, the specimen is arranged so that the face in contact with the tip of the glow-wire is vertical. The tip of the glow-wire is applied to that part of the surface of the specimen which is likely to be subjected to thermal stresses occurring in normal use.

The tip of the glow-wire is applied at places where the section is thinnest, but not more than 15 mm from the upper edge of the specimen. This applies to cases where the areas subject to thermal stress during normal use of the equipment are not specified in detail.

If possible, the tip of the glow-wire is applied to flat surfaces and not to grooves, knock-outs, narrow recesses or sharp edges.

The glow-wire is electrically heated to the temperature specified which is measured by means of the calibrated thermocouple. Care must be taken to ensure that, before starting the test, this temperature and the heating current are constant for a period of at least 60 s and that heat radiation does not influence the specimen during this period or during the calibration; for example, by providing an adequate distance or by using an appropriate screen.

The tip of the glow-wire is then brought into contact with the specimen and is applied as specified. The heating current is maintained during this period. After this period, the glow-wire is slowly separated from the specimen, avoiding any further heating of the specimen and any movement of air which might affect the result of the test.

The movement of the tip of the glow-wire into the specimen when pressed to it shall be mechanically limited to 7 mm.

After each test, it is necessary to clean the tip of the glow-wire of any residue of insulating material, for example by means of a brush.

9.11.2.2.6 Severities

a) The temperature of the tip of the glow-wire and the duration of its application to the specimen shall be (650 ± 10) °C and (30 ± 1) s.

b) The temperature of the tip of the glow-wire and the duration of its application to the specimen shall be (960 ± 10) °C and (30 ± 1) s.

Other test temperatures are specified in subsequent parts.

~~NOTE~~ The values should be chosen from the severities table of IEC 60695-2-10 to 13.

9.11.2.2.7 Observations and measurements

During application of the glow-wire and during a further period of 30 s, the specimen, the parts surrounding the specimen, and the layer of tissue paper placed below it shall be observed.

The time at which the specimen ignites and the time when flames extinguish during or after the period of application are noted.

The maximum height of any flame is measured and noted, the start of the ignition, which might produce a high flame for a period of approximately 1 s, being disregarded.

The height of flame denotes the vertical distance measured between the upper edge of a glow-wire, when applied to the specimen, and the visible tip of the flame.

The specimen is considered to have withstood the glow-wire test:

– if there is no visible flame and no sustained glowing;
– if flames or glowing of the specimen extinguish within 30 s after removal of the glow-wire.

IECNORM.COM : Click to view the full PDF of IEC 60269-1:2024 RLV

There shall be no burning of the tissue paper or scorching of the pinewood board.

9.11.2.3 Verification of resistance to rusting

All grease is removed from the parts to be tested by immersion in a suitable degreasing agent for 10 min. The parts are then immersed for 10 min in a 10 % solution of ammonium chloride in water, at a temperature of (20 ± 5) °C.

Without drying, but after shaking off any drops, the parts are placed for 10 min in a box containing air saturated with moisture at a temperature of (20 ± 5) °C.

After the parts have been dried for 10 min in a heating cabinet at a temperature of (100 ± 5) °C, their surface shall show no signs of rust.

Traces of rust on sharp edges and any yellowish film removable by rubbing are ignored.

For small springs and for inaccessible parts exposed to abrasion, a layer of grease may provide sufficient protection against rusting. Such parts are subjected to the test only if there is doubt about the effectiveness of the grease film, and the test is then made without previous removal of the grease.

9.12 Test of durability of markings

The marking is rubbed by hand for 5 s with a piece of cloth soaked with water and again for 5 s with a piece of cloth soaked with aliphatic solvent hexane.

It is recommended to use aliphatic solvent hexane with an aromatic content of maximum 0,1 volume percentage, a kauributanol value of approximately 29, an initial boiling point of approximately 65 °C, a dry point of approximately 69 °C and a density of approximately 0,68 g/cm^3.

IECNORM.COM : Click to view the full PDF of IEC 60269-1:2024 RLV

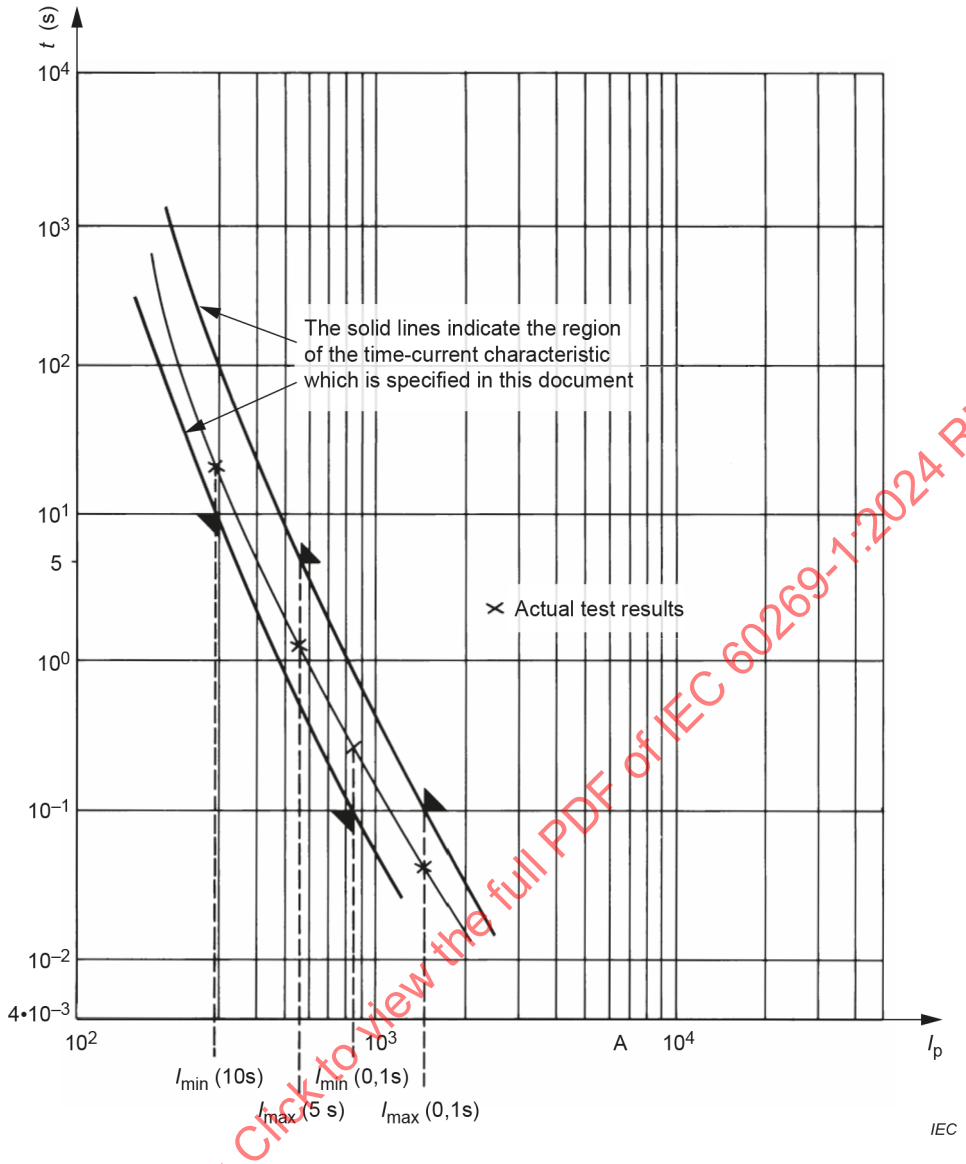

Figure 1 – Diagram illustrating the means of verification of the time-current characteristic, using the results of the tests at the "gate" currents (example)

IECNORM.COM : Click to view the full PDF of IEC 60269-1:2024 RLV

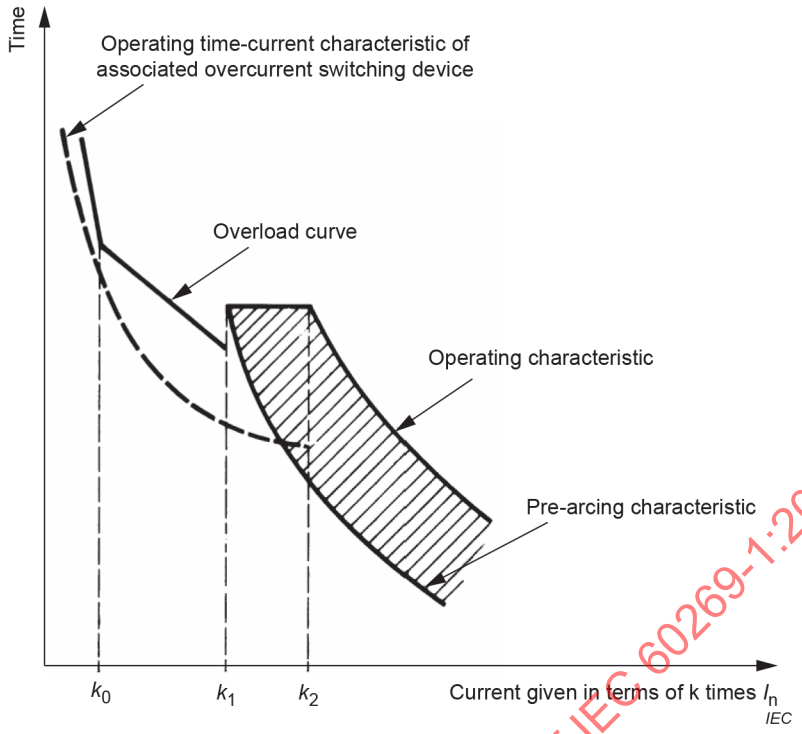

The overload curve between $k_0 \times I_n$ and $k_1 \times I_n$ corresponds to a constant I^2t value.

Figure 2 – Overload curve and time-current characteristic for "a" fuse-links

IECNORM.COM : Click to view the full PDF of IEC 60269-1:2024 RLV

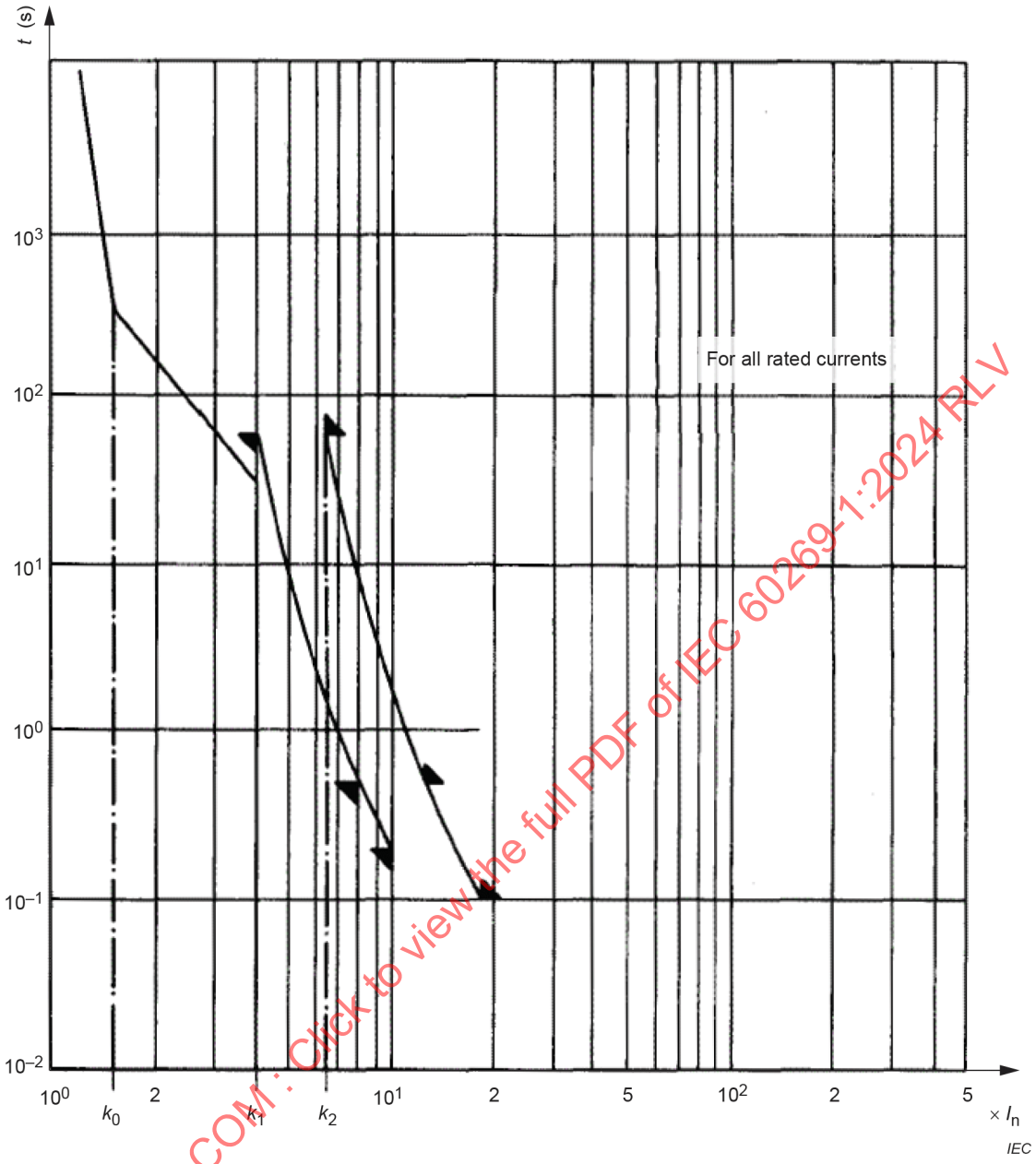

Figure 3 – Time-current zone for aM fuses

IECNORM.COM : Click to view the full PDF of IEC 60269-1:2024 RLV

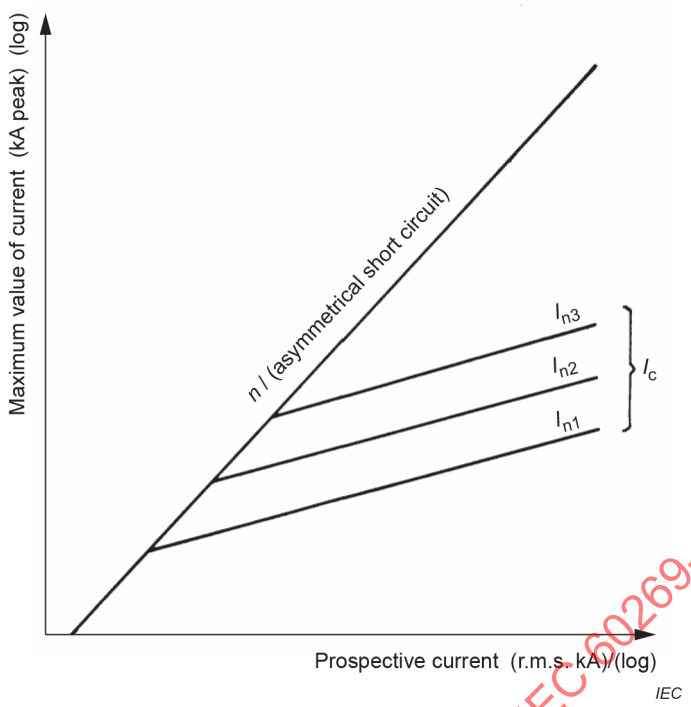

Key

I_{n1}, I_{n2}, I_{n3}	rated currents of fuse-links
I_c	maximum value of cut-off current
n	factor depending on the value of the power factor

Figure 4 – General presentation of the cut-off characteristics for a series of AC fuse-links

IECNORM.COM : Click to view the full PDF of IEC 60269-1:2024 RLV

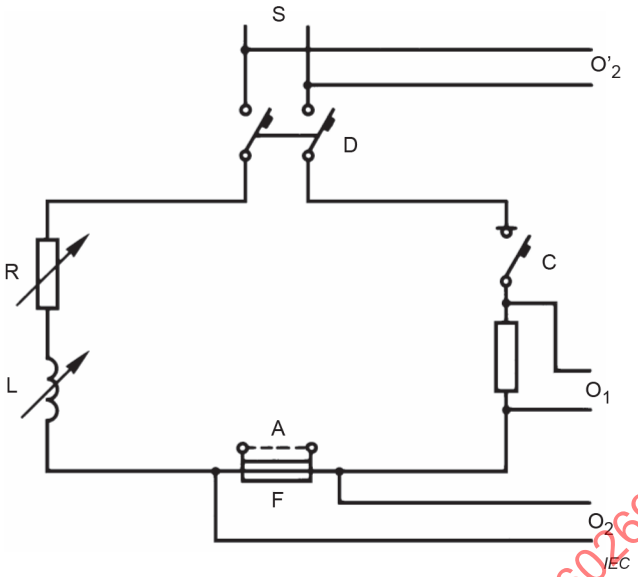

Key

A removable link used for the calibration test

C apparatus for closing the circuit

D circuit-breaker or other apparatus for protection of the source

F fuse on test

L adjustable inductor

O_1 measuring circuit for recording the current

O_2 measuring circuit for recording the voltage during the test

O'_2 measuring circuit for recording the voltage during calibration

R adjustable resistor

S source of power

Figure 5 – Typical diagram of the circuit used for breaking capacity test (see 9.5)

IECNORM.COM : Click to view the full PDF of IEC 60269-1:2024 RLV

Applied voltage for the calibration = B_{00}

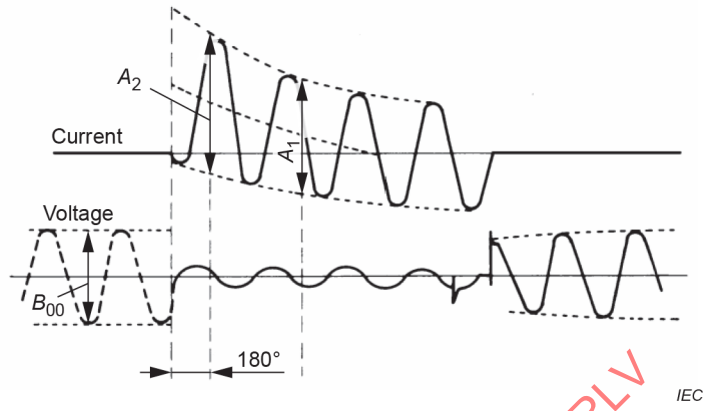

Figure 6a) – Calibration of the circuit

Current $I_{RMS} = \frac{A_1}{2\sqrt{2}} \times \frac{B_0}{B_{00}}$

Recovery voltage $U_{RMS} = \frac{B_1}{2\sqrt{2}}$

Applied test voltage = B_0

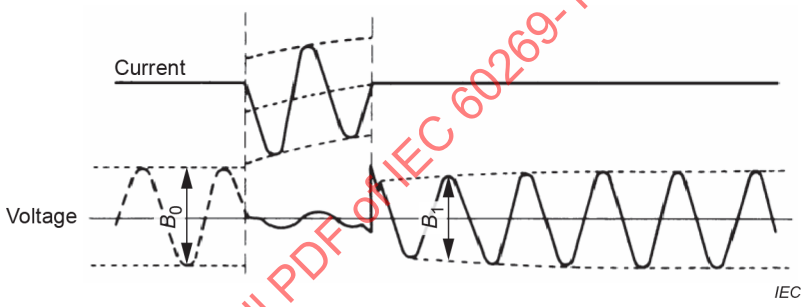

Figure 6b) – Oscillogram corresponding to a breaking operation where the arc is initiated later than 180 electrical degrees after making

Current $I_{RMS} = \frac{A_2}{2\sqrt{2}} \times \frac{B_0}{B_{00}}$

Recovery voltage $U_{RMS} = \frac{B_2}{2\sqrt{2}}$

Applied test voltage = B_0

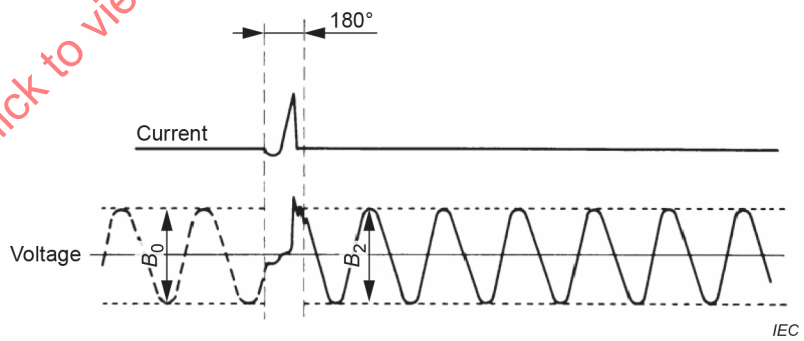

Figure 6c) – Oscillogram corresponding to a breaking operation where the arc is initiated earlier than 180 electrical degrees after making

Figure 6 – Interpretation of oscillograms taken during the AC breaking-capacity tests (see 9.5.7)

IECNORM.COM : Click to view the full PDF of IEC 60269-1:2024 RLV

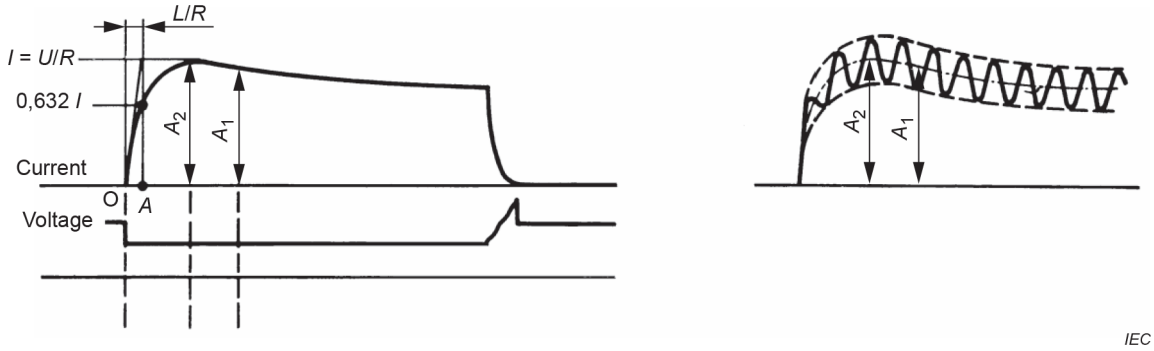

Calibration of the circuit

Where ripples exist, the corresponding values of 0,632 I, A_1 and A_2 of the RMS curve shall be measured.

Figure 7a)

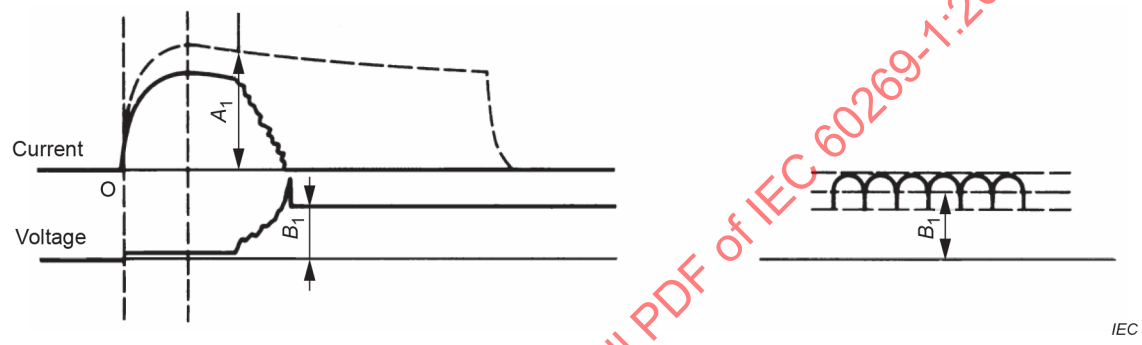

Oscillogram corresponding to a breaking operation where the arc is initiated after the current has passed its maximum value.

Current $I = A_1$ at voltage $U = B_1$.

Where no steady value of voltage exists, the mean value during the period of 100 ms after final arc extinction shall be measured.

Figure 7b)

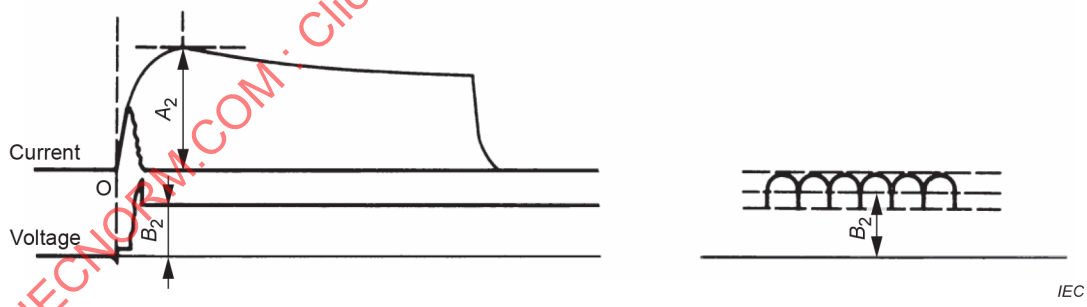

Oscillogram corresponding to a breaking operation where the arc is initiated before the current has reached its maximum value.

Current $I = A_2$ at voltage $U = B_2$.

Where no steady value of voltage exists, the mean value during the period of 100 ms after final arc extinction shall be measured.

Figure 7c)

Figure 7 – Interpretation of oscillograms taken during the DC breaking-capacity tests (see 9.5.7)

IECNORM.COM : Click to view the full PDF of IEC 60269-1:2024 RLV

Dimensions in millimetres

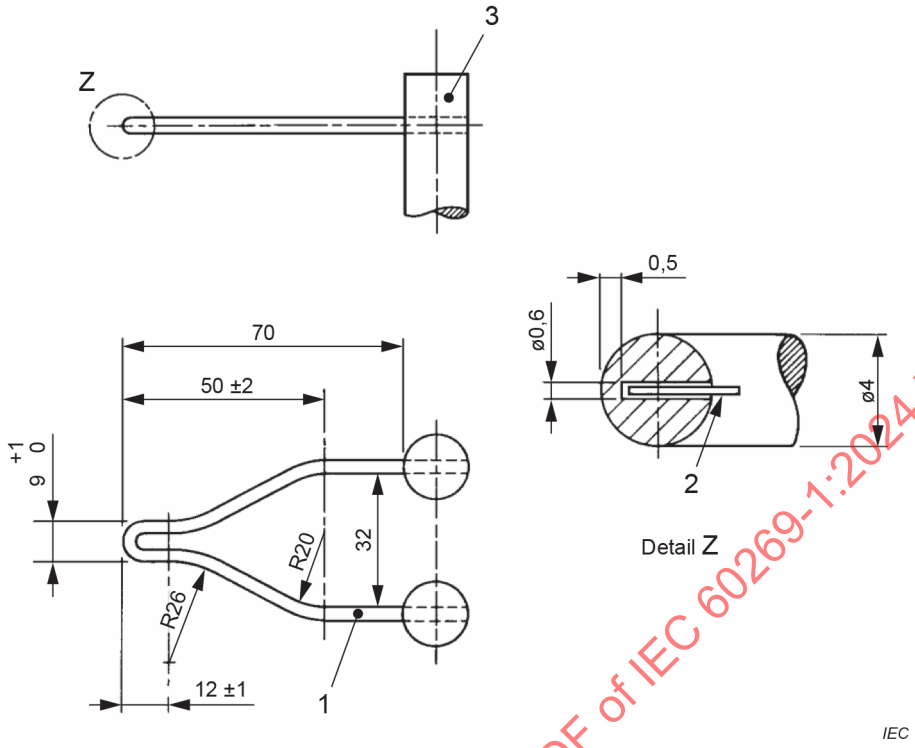

Key

1 glow-wire soldered at 3

2 thermocouple

3 stud

Figure 8 – Glow-wire and position of the thermocouple

IECNORM.COM : Click to view the full PDF of IEC 60269-1:2024 RLV

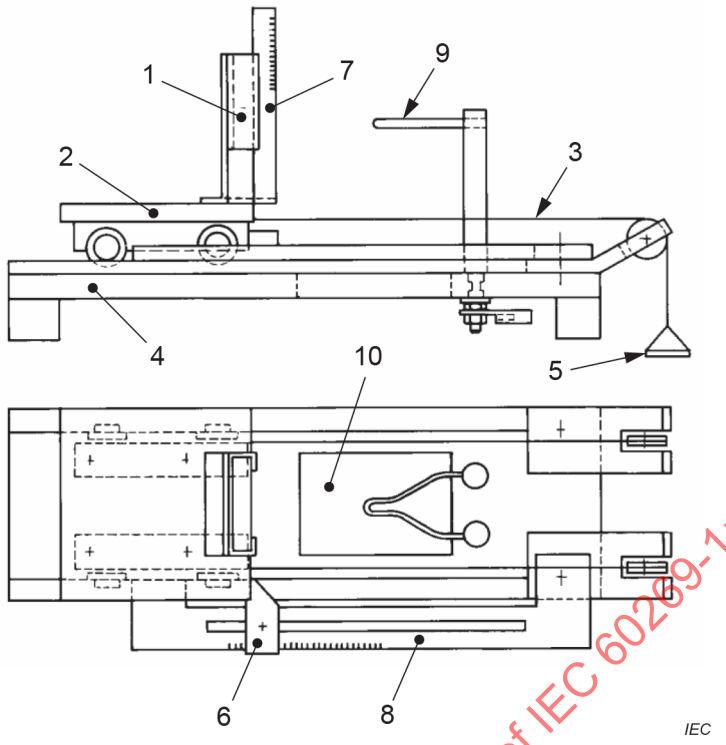

Key

1	position of clamp	6	adjustable stop
2	carriage	7	scale for measurement flame
3	tensioning cord	8	scale for penetration measurement
4	base plate	9	glow-wire (Figure 8)
5	weight	10	break-through in base plate for particles falling from the specimen

Figure 9 – Test apparatus (example)

IECNORM.COM : Click to view the full PDF of IEC 60269-1:2024 RLV

Annex A
(informative)

Measurement of short-circuit power factor

There is no method by which the short-circuit power factor can be determined with precision, but, for the purposes of this document, the determination of the power factor in the test circuit may be made with sufficient accuracy by whichever of the three following methods is the more appropriate.

Method I: Calculation from circuit constants

The power factor may be calculated as the cosine of an angle ϕ where ϕ = arc tan X/R, X and R being respectively the reactance and resistance of the test-circuit during the period in which the short circuit exists.

Owing to the transitory nature of the phenomenon, no accurate method can be given for determining X and R, but, for compliance with ~~this standard~~ the IEC 60269 series, the values may be determined by the following method.

R is measured in the test circuit with direct current; if the circuit includes a transformer, the resistance R_1 of the primary circuit and the resistance R_2 of the secondary circuit are measured separately and the required value R is then given by the formula:

$$R = R_2 + R_1 r^2$$

in which r is the ratio of transformation of the transformer

X is then obtained from the formula

$$\sqrt{R^2 + X^2} = \frac{E}{I}$$

the ratio $\frac{E}{I}$ (circuit-impedance) being obtained from the oscillogram as indicated in Figure A.1.

Method II: Determination from DC component

The angle ϕ may be determined from the curve of the DC component of the asymmetrical current wave between the incidence of short circuit and the beginning of arcing as follows.

1) The formula for the DC component is

$$i_d = I_{do}\, e^{-Rt/L}$$

where

i_d is the value of the DC component at any instant;

I_{do} is the initial value of the DC component;

L/R is the time-constant of the circuit in seconds;

t is the time-interval, in seconds, between i_d and I_{do};

e base of Napierian logarithms.

The time-constant L/R can be ascertained from the above formula as follows:

a) measure the value of I_{do} at the instant of short-circuit and the value of i_d at any other time t, before the beginning of the arcing;

b) determine the value of $e^{-Rt/L}$ by dividing i_d by I_{do};

IECNORM.COM : Click to view the full PDF of IEC 60269-1:2024 RLV

c) from a table of values of e^{-x}, determine the value of $-x$ corresponding to the ratio i_d/I_{do};

d) the value x then represents Rt/L, from which R/L can be determined by dividing x by t, and so L/R is obtained.

2) Determine the angle ϕ from:

$$\phi = \arctan \omega L/R$$

where ω is 2 π times the actual frequency.

This method should not be used when the currents are measured by current transformers.

Method III: Determination with pilot generator

When a pilot generator is used on the same shaft as the test generator, the voltage of the pilot generator on the oscillogram may be compared in phase first with the voltage of the test generator and then with the current of the test generator.

The difference in the phase angles between the pilot generator voltage and the main generator voltage, on the one hand, and the pilot generator voltage and the test generator current, on the other hand, gives the phase angle between the voltage and the current of the test generator, from which the power factor can be determined.

IECNORM.COM : Click to view the full PDF of IEC 60269-1:2024 RLV

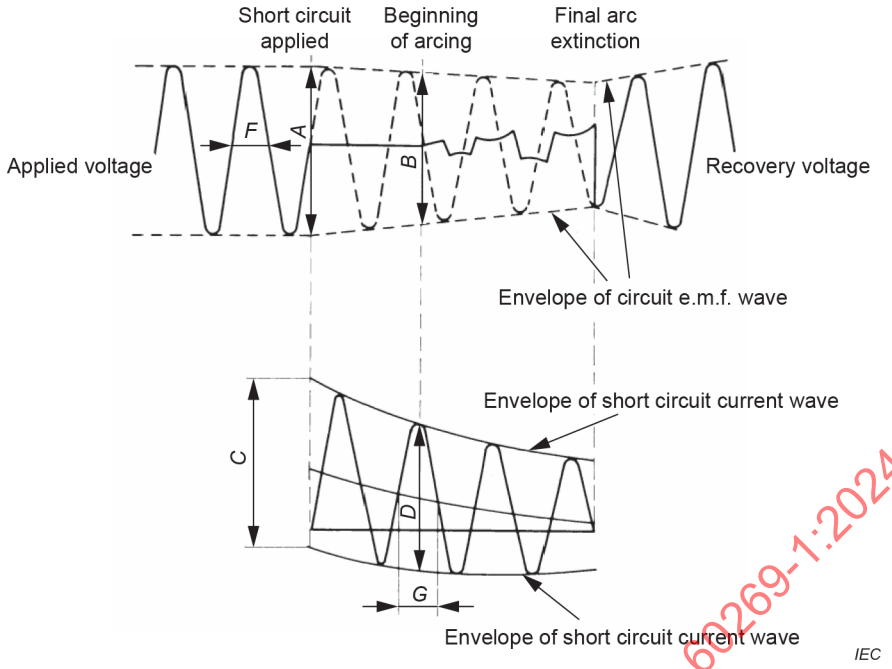

$$\text{Circuitimpedance} = \frac{E}{I} = \frac{B}{D} = \frac{A}{C} \times \frac{F}{G}$$

where

E is the circuit e.m.f. at the beginning of arcing = $\frac{B}{2\sqrt{2}}$, expressed in volts;

I is the breaking current = $\frac{D}{2\sqrt{2}}$, expressed in amperes;

A is twice the peak value of the applied voltage, expressed in volts;

C is twice the peak value of the symmetrical component of the current wave at the beginning of the short-circuit, expressed in amperes;

F is the duration in seconds of one half-cycle of the applied voltage wave;

G is the duration in seconds of one half-cycle of the current wave at the beginning of arcing.

Figure A.1 – Determination of circuit-impedance for calculation of power factor in accordance with method I

IECNORM.COM : Click to view the full PDF of IEC 60269-1:2024 RLV

Annex B
(informative)

Calculation of pre-arcing I^2t values for "gG", "gM"~~, "gD"~~ and ~~"gN"~~ "gU" fuse-links and calculation of operating I^2t values at reduced voltage

B.1 Evaluation of the pre-arcing I^2t value at 0,01 s

The approximate evaluation of the pre-arcing I^2t values at 0,01 s as a function of the value of pre-arcing I^2t at 0,1 s and measured values at test no. 2 is possible by means of the following formula:

$$I^2t_{(0{,}01\,s)} = F \times \sqrt{I^2t_{(0{,}1\,s)} \times I^2t(\text{test no. 2})}$$

F = 0,7 for "gG", "~~gK~~" and "gM" fuse-links~~;~~

~~F = 0,6 for "gD" fuse-links;~~

~~F = 1,0 for "gN" fuse-links~~.

The factor F corrects the curvature in the time-current characteristic in this region of time.

B.2 Calculation of the value of pre-arcing I^2t under the conditions of test no. 2

For smaller ratings of a homogeneous series where no direct tests are provided in the specification, the evaluation of the value of pre-arcing I^2t under the conditions of test no. 2 is possible by means of the formula:

$$\left(I^2t\right)_2 = \left(I^2t\right)_1 \times \left(\frac{A_2}{A_1}\right)^2$$

where

$\left(I^2t\right)_2$ is the pre-arcing I^2t under the conditions of test no. 2 for the smaller rating;

$\left(I^2t\right)_1$ is the pre-arcing I^2t under the conditions of test no. 2 for the largest rating measured in the breaking-capacity tests;

A_2 is the minimum cross-sectional area of the element of smaller rating;

A_1 is the minimum cross-sectional area of the element of the largest rating;

The calculated value can be used for the evaluation of the I^2t value at 0, 01 s (see Clause B.1).

IECNORM.COM : Click to view the full PDF of IEC 60269-1:2024 RLV

B.3 Calculation of the value of operating I^2t at reduced voltage

The operating I^2t values can be estimated at lower voltages than those measured during tests 1 and 2 of Table 21 using the following formula.

$$Operating\ I^2t\ at\ reduced\ voltage\ V_r = \left\{ \frac{Operating\ I^2t\ at\ test\ voltage\ V_t}{prearcing\quad I^2t} \right\}^{V_r/V_t} \times\ prearcing\quad I^2t$$

IECNORM.COM : Click to view the full PDF of IEC 60269-1:2024 RLV

Annex C
(informative)

Calculation of cut-off current-time characteristic

C.1 Overview

Subclause 8.6 of this document prescribes the cut-off characteristic as a function of the prospective current.

The following method constitutes a means by which the cut-off current characteristic may be calculated as a function of the actual pre-arcing time.

The result will be different for every fuse-link, and thus, for full interchangeability, calculations should be based upon the maximum I^2t values permitted in this document. It should also be noted that the following method gives the peak current during the pre-arcing period, whereas for many fuses (especially the types for protection of semiconductors), the current continues to rise during the arcing period, and hence the following method will give a somewhat low estimate, dependent upon circuit conditions.

However, it is included as a good approximation which will enable a user to calculate these curves when necessary (for example, for studies of contact welding).

C.2 Preliminary note

The cut-off current characteristic as a function of prospective current is defined in 3.3.7; the characteristic is the subject of 6.8.2 and of Figure 4; the tests are described in 9.6.

The supply of this characteristic is not mandatory.

Moreover, the information that it gives is generally imprecise, especially in the zone at the beginning of the limitation (pre-arcing time of about 5 ms for symmetrical operation or up to 10 ms for asymmetrical operation).

Users who have to protect components (for example, contactors) which withstand with difficulty currents of short duration and large amplitude (for example, those which the fuses let through before clearance of the short circuit) need to know with accuracy the maximum instantaneous value reached by the current during the breaking operation in order to make the most economical "fuse-component" association.

A characteristic which accurately gives the cut-off current as a function of the actual pre-arcing times provides more useful information for this purpose.

C.3 Definition

Cut-off current characteristic as a function of actual pre-arcing time: a curve giving cut-off currents as a function of actual pre-arcing time for a symmetrical operation.

C.4 Characteristic

If the cut-off current characteristic is indicated as a function of actual pre-arcing time, it shall be evaluated for symmetrical making current and shall be given according to the example shown in Figure C.1 in a double logarithmic presentation with current as abscissa, and time as ordinate.

IECNORM.COM : Click to view the full PDF of IEC 60269-1:2024 RLV

C.5 Test condition

The cut-off current corresponding to a given pre-arcing time depends also on the degree of asymmetry of the short-circuit, and since there are as many characteristics as making conditions an infinite number of tests would be required.

For a given fuse-link, in a given region of operating time, and for each value of cut-off current, the value I^2t is approximately independent of the degree of asymmetry of the short-circuit current.

This property makes the following procedure possible.

1) Measurement of the cut-off current characteristic for symmetrical operation as a function of the actual pre-arcing time for a symmetrical operation.
2) Calculation of the cut-off current characteristic corresponding to any degree of asymmetry.

C.6 Calculation from the measured values

The experimental characteristic gives cut-off current as a function of pre-arcing time.

The short circuit being symmetrical, it is easy to calculate from the above values the prospective short-circuit current of the Joule integral

of

ω pulsation;

I_p prospective short-circuit current;

I_{ps}: with symmetrical conditions;

I_{pa}: with asymmetrical conditions;

I_c cut-off current;

ϕ phase of the current with respect to the voltage;

ψ making angle, with respect to the natural zero of the voltage;

R, L: resistance and inductance symmetrical conditions;

t_s: pre-arcing time with symmetrical conditions;

t_a: pre-arcing time with asymmetrical conditions.

With symmetrical conditions:

(1) $$I_c = I_{ps}\sqrt{2}\,\sin\omega\ t_s$$

(2) $$\int I_c^2 \mathrm{d}t = 2\,I_{ps}^2 \int_0^{t_s} \sin^2 \omega t\ \mathrm{d}t$$

by definition: $\psi = 0$

The calculation is independent of the values of R, L, ϕ.

IECNORM.COM : Click to view the full PDF of IEC 60269-1:2024 RLV

With asymmetrical conditions:

(3) $$I_c = I_{pa}\sqrt{2}\left[\sin(\omega t_a + \psi - \varphi)\right] - e^{-\frac{Rt_a}{L}}\sin(\psi - \varphi)$$

(4) $$\int I^2 dt = 2I_{pa}^2\int_0^{t_a}\left[\sin(\omega t + \psi - \varphi) - e^{-\frac{R_t}{L}}\sin(\psi - \varphi)\right]^2 dt$$

Assuming that the cut-off current and the Joule integral are the same for both conditions:

$$I_{ps}\sqrt{2}\ \sin\omega t_s \approx I_{pa}\sqrt{2}\left[\sin(\omega t_a + \psi - \varphi) - e^{-\frac{Rt_a}{L}}\sin(\psi - \varphi)\right]$$

$$2I_{ps}^2\int_0^{t_a}\sin^2\omega t\ dt \approx 2I_{pa}^2\int_0^{t_a}\left[\sin(\omega t + \psi - \varphi) - e^{-\frac{R_t}{L}}\sin(\psi - \varphi)\right]^2 dt$$

it is possible to calculate any two values if the seven others are known.

In particular, from the value of cut-off current and Joule integral, obtained by experience and by calculation, it is possible to calculate the pre-arcing time and the prospective short-circuit current corresponding to imposed asymmetrical conditions.

This assumption is approximately true for pre-arcing times of the order of 1 ms to 5 ms.

For pre-arcing times inferior to 1 ms, the characteristic giving cut-off current as a function of prospective short-circuit current gives precise information.

IECNORM.COM : Click to view the full PDF of IEC 60269-1:2024 RLV

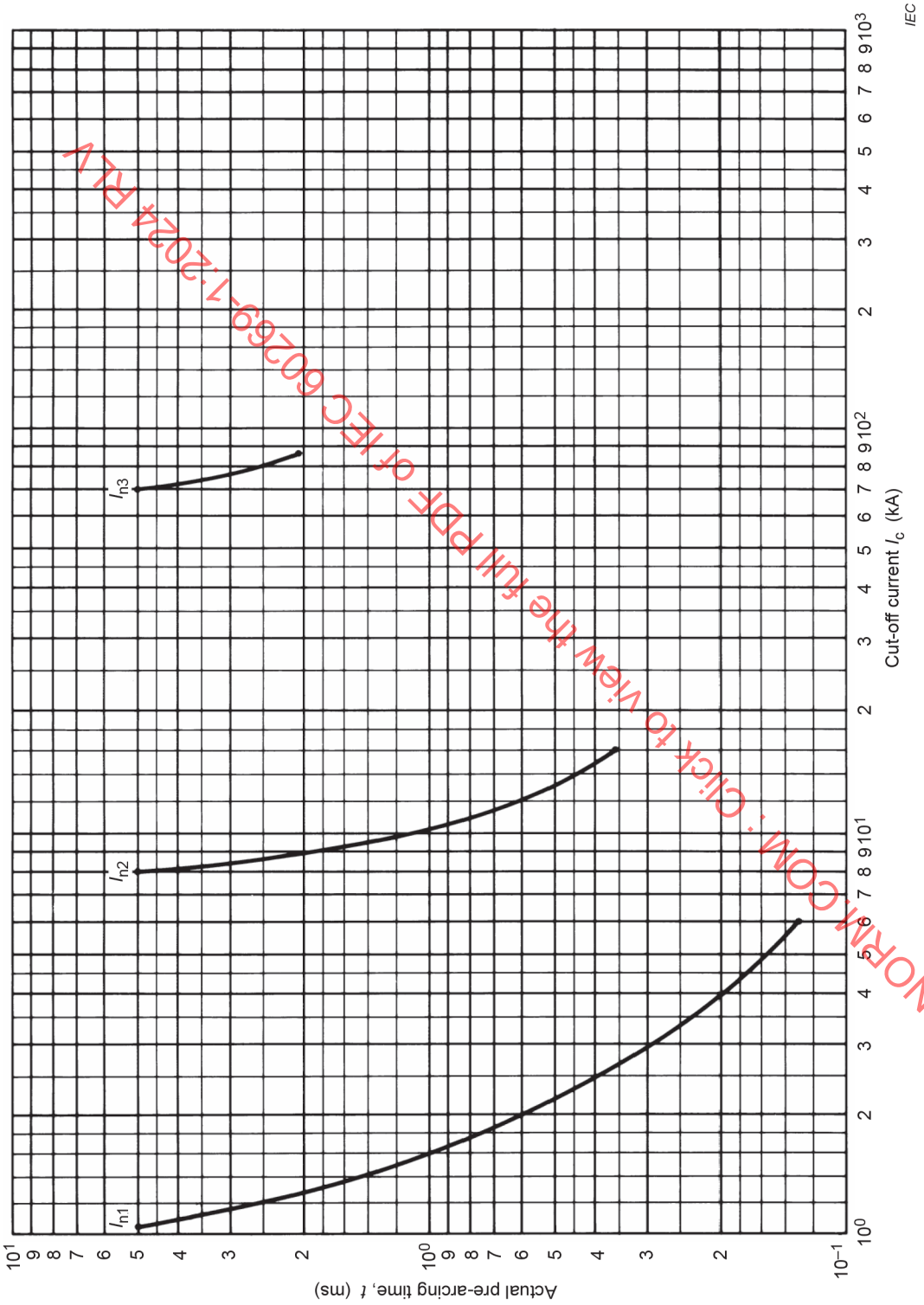

Figure C.1 – Cut-off current characteristic as a function of actual pre-arcing time

IECNORM.COM : Click to view the full PDF of IEC 60269-1:2024 RLV

Annex D
(informative)

Effect of change of ambient temperature and surroundings on the performance of fuse-links

D.1 Effect of increase of ambient temperature

D.1.1 On current rating

For fuse-links that operate at full load for long periods in an average ambient temperature above the value given in 4.1, a reduction of the current rating may be required. The de-rating factor should be as agreed by the manufacturer and the user after taking into account all the circumstances.

D.1.2 On temperature rise

An increase in average ambient temperature causes a relatively small increase in temperature rise.

D.1.3 On conventional fusing and non-fusing current (I_f and I_{nf})

An increase in average ambient temperature causes a decrease, usually small, in the fusing and non-fusing current (I_f and I_{nf}).

D.1.4 For motor starting conditions

It is not necessary to de-rate fuse-links for increases in average ambient temperature of the fuse-link caused by the starting of a motor.

D.2 Effect of decrease of ambient air temperature

A decrease in ambient air temperature below the value given in 4.1 may permit an increase in current rating but it may also cause an increase in the conventional fusing current, conventional non-fusing current and pre-arcing times for smaller over-currents. The magnitude of the relevant increases will be dependent upon the actual temperature and on the design of the fuse-link. In this case the manufacturer should always be consulted.

D.3 Effect of installation conditions

Different installation conditions, such as:

a) enclosure in a box or mounting in the open;

b) the nature of the mounting surface;

c) the number of fuses mounted in a box;

d) the cross-section and insulation of connections;

can affect the operating conditions and should be taken into account.

IECNORM.COM : Click to view the full PDF of IEC 60269-1:2024 RLV

Annex E
(normative)

Particular requirements for fuse-bases with screwless-type terminals for external copper conductors

E.1 ~~Scope~~ General

This annex applies to fuse-bases that fall within the scope of Clause 1, feature screwless-type terminals supporting a maximum current of 63 A, and are primarily intended for the purpose of connecting unprepared copper conductors (see E.3.6) with a cross-section of up to 16 mm^2. For the purpose of this annex, screwless-type terminals shall be referred to as terminals and copper conductors as conductors.

E.3 Terms and definitions

In addition to Clause 3, the following terms and definitions apply:

E.3.1
clamping unit
part(s) of the terminal necessary for mechanical clamping and electrical connection of the conductors including the part(s) which are necessary to ensure correct contact pressure

E.3.2
screwless-type terminal
terminal for the connecting and subsequent disconnection of one conductor per clamping unit obtained directly or indirectly by means of springs, wedges or the like

Note 1 to entry: Examples are given in Figure E.2.

E.3.3
universal terminal
terminal for the connection and disconnection of all types of conductors (rigid and flexible)

E.3.4
non-universal terminal
terminal for the connection and disconnection of a certain kind of conductor only (e.g. rigid-solid conductors only or rigid-(solid and stranded) conductors only)

E.3.5
push-wire terminal
non-universal terminal in which the connection is made by pushing-in rigid (solid or stranded) conductors

E.3.6
unprepared conductor
conductor which has been cut and the insulation of which has been removed over a certain length for insertion into a terminal

Note 1 to entry: A conductor the shape of which is arranged for introduction into a terminal or of which the strands may be twisted to consolidate the end, is considered to be an unprepared conductor.

Note 2 to entry: The term "unprepared conductor" means conductor not prepared by soldering of the wire, use of cable lugs, formation of eyelets, etc., but includes its reshaping before introduction into the terminal or, in the case of flexible conductor, by twisting it to consolidate the end.

IECNORM.COM : Click to view the full PDF of IEC 60269-1:2024 RLV

E.7 Marking

In addition to Clause 7, the following requirements apply:

- universal terminals:
  - no marking.
- non-universal terminals:
  - terminals declared for rigid-solid conductors shall be marked by the letters "s" or "sol";
  - terminals declared for rigid (solid and stranded) conductors shall be marked by the letter "r";
  - terminals declared for flexible conductors shall be marked by the letter "f".

The markings should appear on the fuse-base or on the smallest package or in the technical information.

An appropriate marking indicating the length of insulation to be removed before insertion of the conductor into the terminal shall be shown on the fuse-base . The manufacturer shall also provide information, in his literature, on the maximum number of conductors which may be clamped.

E.8 Standard conditions for construction

Clause 8 applies, with the following modifications.

E.8.1 Fixed connections including terminals

Terminals shall resist the mechanical loads that occur when the equipment is used in accordance with its intended purpose. The connection or disconnection of conductors shall be made

– by the use of a general purpose tool or by a convenient device integral with the terminal to open it and to assist the insertion or the withdrawal of the conductors (e.g. for universal terminals)

or for rigid conductors

– by simple insertion. For disconnection of the conductors an operation other than a pull only on the conductor shall be necessary.

Universal terminals shall accept rigid (solid or stranded) and flexible unprepared conductors.

Non-universal terminals shall accept the types of conductors declared by the manufacturer.

Compliance is checked by inspection and by the tests of E.9.1 and E.9.2.

E.8.2 Dimensions of connectable conductors

The dimensions of connectable conductors are given in Table E.1.

The ability to connect these conductors shall be checked by inspection and by the tests of E.9.1 and E.9.2.

IECNORM.COM : Click to view the full PDF of IEC 60269-1:2024 RLV

Table E.1 – Connectable conductors

Connectable conductors and their theoretical diameter				
Metric				
Rigid			Flexible	
	Solid	Stranded		
mm^2	∅ mm	∅ mm	mm^2	∅ mm
1,5	1,5	1,7	1,5	1,8
2,5	1,9	2,2	2,5	2,3
4,0	2,4	2,7	4,0	2,9
			6,0	3,9
			10	5,1
			16	6,3
NOTE Diameters of the largest rigid and flexible conductors are based on Table 1 of IEC 60228 ~~(2004)~~:2023.				

E.8.3 Connectable cross-sectional areas

The nominal cross-sections to be clamped are defined in Table E.2.

Table E.2 – Cross-sections of copper conductors connectable to terminals

Rated current A	Nominal cross-sections to be clamped mm^2
Up to and including 16	1,5, up to and including 4
Above 16, up to and including 35	4, up to and including 10
Above 35, up to and including 63	6, up to and including 16

Compliance is checked by inspection and by the tests of E.9.1 and E.9.2.

E.8.4 Insertion and disconnecting of conductors

The insertion and disconnecting of conductors shall be made in accordance with the manufacturer's instructions.

Compliance is checked by inspection.

E.8.5 Design and construction of terminals

Terminals shall be designed and constructed so that

– each conductor is clamped individually;

– during operation of connection or disconnection the conductors can be connected or disconnected either at the same time or separately;

– inadequate insertion of the conductor is avoided.

It shall be possible to clamp securely any number of conductors up to the maximum provided for.

Compliance is checked by inspection and by the tests of E.9.1 and E.9.2.

IECNORM.COM : Click to view the full PDF of IEC 60269-1:2024 RLV

E.8.6 Resistance to ageing

The terminals shall be resistant to ageing.

Compliance is checked by inspection and by the tests of E.9.3.

E.9 Tests

E.9.1 Test of reliability of terminals

E.9.1.1 Reliability of screwless system

The test is carried out on three terminals of poles of new samples, with copper conductors of the cross sectional area according to Table E.2. The types of conductors shall be in accordance with E.8.1.

The connection and subsequent disconnection shall be made five times with the smallest diameter conductor and successively five times with the largest diameter conductor.

New conductors shall be used each time, except for the fifth time, when the conductor used for the fourth insertion is clamped at the same place. Before insertion into the terminal, wires of stranded rigid conductors shall be re-shaped and wires of flexible conductors shall be twisted to consolidate the ends.

For each insertion, the conductors are either pushed as far as possible into the terminal or shall be inserted so that adequate connection is obvious.

After each insertion, the conductor is rotated by 90° around its axis at the level of the clamped section and subsequently disconnected.

After these tests, the terminal shall not be damaged in such a way as to impair its further use.

E.9.1.2 Test of reliability of connection

Three terminals of poles of new samples are fitted with new copper conductors of the type and cross-sectional area according to Table E.2.

The types of conductors shall be in accordance with E.8.1.

Before insertion into the terminal, wires of stranded rigid conductors and flexible conductors shall be reshaped and wires of flexible conductors shall be twisted to consolidate the ends.

It shall be possible to fit the conductor into the terminal without undue force in the case of universal terminals and with the force necessary by hand in the case of push-wire terminals.

The conductor is either pushed as far as possible into the terminal or shall be inserted so that adequate connection is obvious.

After the test, no wire of the conductor shall have escaped outside the terminal.

E.9.2 Tests of reliability of terminals for external conductors: mechanical strength

For the pull-out test three terminals of poles of new samples are fitted with new conductors of the type and of the minimum and maximum cross-sectional area according to Table E.2.

Before insertion into the terminal, wires of stranded rigid conductors and flexible conductors shall be reshaped and wires of flexible conductors shall be twisted to consolidate the ends.

IECNORM.COM : Click to view the full PDF of IEC 60269-1:2024 RLV

Each conductor is then subjected to pull force of the value shown in Table E.3. The pull is applied without jerks for 1 min in the direction of the axis of the conductor.

Table E.3 – Pull forces

Cross-sectional area mm^2	Pull force N
1,5	40
2,5	50
4,0	60
6,0	80
10	90
16	100

During the test the conductor shall not slip out of the terminal.

E.9.3 Cycling test

The test is made with new copper conductors having a cross section according to Table 18.

The test is carried out on new samples (a sample is one pole), the required number of which is defined below, according to the type of terminals:

– universal terminals for rigid (solid and stranded) and flexible conductors: 3 samples each (9 samples in total);
– non-universal terminals for solid conductors only: 3 samples;
– universal terminals for rigid (solid and stranded) conductors: 3 samples each (6 samples).

NOTE In the case of rigid conductors, solid conductors should be used (if solid conductors are not available in a given country, stranded conductors may be used).

– non-universal terminals for flexible conductors only: 3 samples.

A conductor having the cross section defined in Table 18 is connected in series as in normal use to each of the three samples as defined in Figure E.1.

The sample is provided with a hole (or equivalent) in order to measure the voltage drop on the terminal.

The whole test arrangement, including the conductors, is placed in a heating cabinet which is initially kept at a temperature of (20 ± 2) °C.

To avoid any movement of the test arrangement until all the following voltage drop tests have been completed it is recommended that the poles are fixed on a common support.

Except during the cooling period test, a test current corresponding to the rated current of the fuse-base is applied to the circuit.

The samples shall be then subjected to 192 temperature cycles, each cycle having a duration of approximately 1 h, as follows:

The air temperature in the cabinet is raised to 40 °C in approximately 20 min. It is maintained to within ± 5 °C of this value for approximately 10 min.

IECNORM.COM : Click to view the full PDF of IEC 60269-1:2024 RLV

The samples are then allowed to cool down in approximately 20 min to a temperature of approximately 30 °C; forced cooling being allowed. They are kept at this temperature for approximately 10 min and, if necessary for measuring the voltage drop, allowed to cool down further, to a temperature of (20 ± 2) °C.

The maximum voltage drop, measured at each terminal, at the end of the 192nd cycle, with the nominal current shall not exceed the smaller of the two following values:

– either 22,5 mV,
– or 1,5 times the value measured after the 24th cycle.

The measurement shall be made as near as possible to the area of contact on the terminal.

If the measuring points cannot be positioned closely to the point of contact, then the voltage drop within the part of the conductor between the ideal and the actual measuring points shall be deducted from the voltage drop measured.

The temperature in the heating cabinet must be measured at a distance of at least 50 mm from the samples.

After this test an inspection with the naked eye, by normal or corrected vision, without additional magnification, shall show no changes evidently impairing further use, such as cracks, deformations or the like.

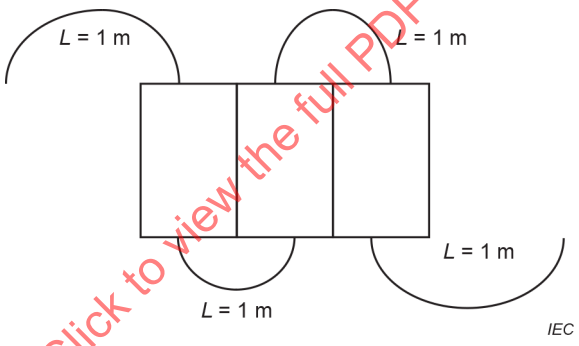

Figure E.1 – Connecting samples

IECNORM.COM : Click to view the full PDF of IEC 60269-1:2024 RLV

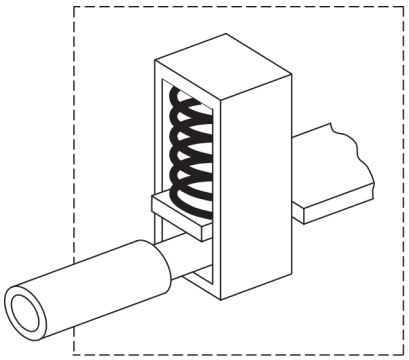

Terminal with indirect pressure

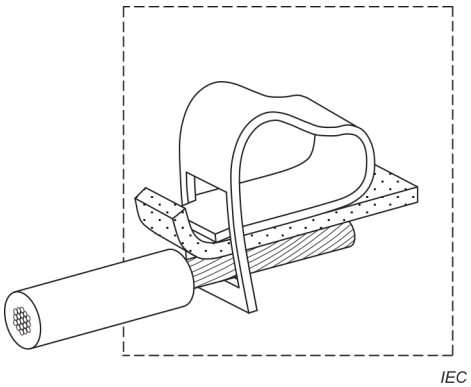

Terminal with direct pressure

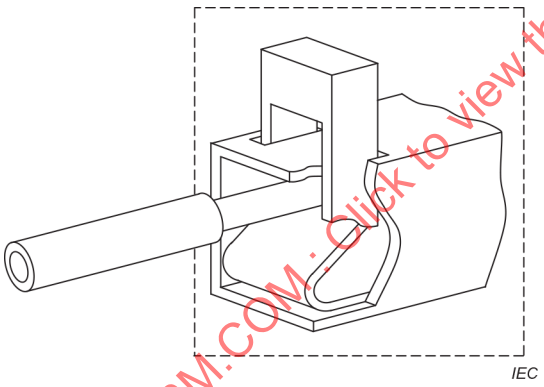

Terminal with actuating element

Figure E.2 – Examples of terminals

IECNORM.COM : Click to view the full PDF of IEC 60269-1:2024 RLV

Bibliography

IEC 60038:2009, *IEC standard voltages*
IEC 60038:2009/AMD1:2021

IEC 60050-441:1984, *International Electrotechnical Vocabulary (IEV) – Chapter 441: Switchgear, controlgear and fuses,* available at https://www.electropedia.org
IEC 60050-441:1984/AMD1:2000

~~IEC 60127, *Cartridge fuse-links for miniature fuses*~~

IEC 60127-2, *Miniature fuses – Part 2: Cartridge fuse-links*

IEC 60228:2023, *Conductors of insulated cables*

IEC 60269-4, *Low-voltage fuses – Part 4: Supplementary requirements for fuse-links for the protection of semiconductor devices*

IEC TR 60269-5, *Low-voltage fuses – Part 5: Guidance for the application of low-voltage fuses*

IEC 60269-6, *Low-voltage fuses – Part 6: Supplementary requirements for fuse-links for the protection of solar photovoltaic energy systems*

IEC 60269-7, *Low-voltage fuses – Part 7: Supplementary requirements for fuse-links for the protection of batteries and battery systems*

IEC 60364-3:1993, *Electrical installations of buildings – Part 3: Assessment of general characteristics*

IEC 60364-5-52:2001, *Electrical installations of buildings – Part 5-52: Selection and erection of electrical equipment – Wiring systems*

IEC 60417, *Graphical symbols for use on equipment,* available at http://www.graphical-symbols.info/equipment

IEC 60695-2-10, *Fire hazard testing – Part 2-10: Glowing/hot-wire based test methods – Glow-wire apparatus and common test procedure*

IEC 60695-2-11:2000, *Fire hazard testing – Part 2-11: Glowing/hot-wire based test methods – Glow-wire flammability test method for end-products (GWEPT)*

IEC 60695-2-12:2000, *Fire hazard testing – Part 2-12: Glowing/hot-wire based test methods – Glow-wire flammability index (GWFI) test method for materials*

IEC 60695-2-13:2000, *Fire hazard testing – Part 2-13: Glowing/hot-wire based test methods – Glow-wire ignition temperature (GWIT) test method for materials*

IEC 60947-3~~:1998~~, *Low-voltage switchgear and controlgear – Part 3: Switches, disconnectors, switch-disconnectors and fuse-combination units*

ISO 3:1973, *Preferred numbers – Series of preferred numbers*

IECNORM.COM : Click to view the full PDF of IEC 60269-1:2024 RLV

IECNORM.COM : Click to view the full PDF of IEC 60269-1:2024 RLV

IEC 60269-1

Edition 5.0 2024-08

INTERNATIONAL STANDARD

NORME INTERNATIONALE

IECNORM.COM : Click to view the full PDF of IEC 60269-1:2024 RLV

Low-voltage fuses – Part 1: General requirements

Fusibles basse tension – Partie 1: Exigences générales

IEC 60269-1:2024-08(en-fr)

CONTENTS

FOREWORD 7
1 Scope 9
2 Normative references 9
3 Terms and definitions 10
3.1 Fuses and their component parts 10
3.2 General terms 12
3.3 Characteristic quantities 14
4 Conditions for operation in service 17
4.1 General 17
4.2 Ambient air temperature (T_a) 18
4.3 Altitude 18
4.4 Atmospheric conditions 18
4.5 Voltage 18
4.6 Current 18
4.7 Frequency, power factor and time constant 18
4.7.1 Frequency 18
4.7.2 Power factor 19
4.7.3 Time constant (τ) 19
4.8 Conditions of installation 19
4.9 Utilization class 19
4.10 Selectivity of fuse-links 19
5 Classification 19
6 Characteristics of fuses 19
6.1 Summary of characteristics 19
6.1.1 General 19
6.1.2 Fuse-holders 19
6.1.3 Fuse-links 20
6.1.4 Complete fuses 20
6.2 Rated voltage 20
6.3 Rated current 21
6.3.1 Rated current of the fuse-link 21
6.3.2 Rated current of the fuse-holder 21
6.4 Rated frequency (see 7.1 and 7.2) 21
6.5 Rated power dissipation of a fuse-link and rated acceptable power dissipation of a fuse-holder. 21
6.6 Limits of time-current characteristics 21
6.6.1 General 21
6.6.2 Time-current characteristics, time-current zones 21
6.6.3 Conventional times and currents 22
6.6.4 Gates 22
6.7 Breaking range and breaking capacity 23
6.7.1 Breaking range and utilization category 23
6.7.2 Rated breaking capacity 24
6.8 Cut-off current and I^2t characteristics 24
6.8.1 General 24
6.8.2 Cut-off current characteristics 24

IECNORM.COM : Click to view the full PDF of IEC 60269-1:2024 RLV

6.8.3 I^2t characteristics ... 24
7 Markings ... 24
7.1 General ... 24
7.2 Markings of fuse-holders ... 25
7.3 Markings of fuse-links ... 25
8 Standard conditions for construction ... 25
8.1 Mechanical design ... 25
8.1.1 Replacement of fuse-links ... 25
8.1.2 Connections, including terminals ... 25
8.1.3 Fuse-contacts ... 26
8.1.4 Construction of a gauge-piece ... 26
8.1.5 Mechanical strength of the fuse-link ... 26
8.2 Insulating properties and suitability for isolation ... 26
8.3 Temperature rise, power dissipation of the fuse-link and acceptable power dissipation of a fuse-holder ... 27
8.4 Operation ... 27
8.5 Breaking capacity ... 28
8.6 Cut-off current characteristic ... 28
8.7 I^2t characteristics ... 29
8.8 Overcurrent selectivity of fuse-links ... 29
8.9 Protection against electric shock ... 30
8.9.1 General ... 30
8.9.2 Clearances and creepage distances ... 30
8.9.3 Leakage currents of fuses suitable for isolation ... 31
8.9.4 Additional constructional requirements for fuse holders for linked fuse-carriers, suitable for isolation ... 31
8.10 Resistance to heat ... 32
8.11 Mechanical strength ... 32
8.12 Resistance to corrosion ... 32
8.12.1 General ... 32
8.12.2 Resistance to rusting ... 32
8.12.3 Resistance to season cracking ... 32
8.13 Resistance to abnormal heat and fire ... 32
8.14 Electromagnetic compatibility ... 32
9 Tests ... 32
9.1 Overview ... 32
9.1.1 General ... 32
9.1.2 Kind of tests ... 33
9.1.3 Ambient air temperature (T_a) ... 33
9.1.4 Condition of the fuse ... 33
9.1.5 Arrangement of the fuse and dimensions ... 33
9.1.6 Testing of fuse-links ... 33
9.1.7 Testing of fuse-holders ... 37
9.2 Verification of the insulating properties and of the suitability for isolation ... 38
9.2.1 Arrangement of the fuse-holder ... 38
9.2.2 Verification of the insulating properties ... 38
9.2.3 Verification of the suitability for isolation ... 39
9.2.4 Acceptability of test results ... 40

IECNORM.COM : Click to view the full PDF of IEC 60269-1:2024 RLV

9.3 Verification of temperature rise and power dissipation 40
9.3.1 Arrangement of the fuse 40
9.3.2 Measurement of the temperature rise 41
9.3.3 Measurement of the power dissipation of the fuse-link 41
9.3.4 Test method 41
9.3.5 Acceptability of test results 43
9.4 Verification of operation 43
9.4.1 Arrangement of the fuse 43
9.4.2 Ambient air temperature 43
9.4.3 Test method and acceptability of test results 43
9.5 Verification of the breaking capacity 47
9.5.1 Arrangement of the fuse 47
9.5.2 Characteristics of the test circuit 47
9.5.3 Measuring instruments 48
9.5.4 Calibration of test circuit 48
9.5.5 Test method 50
9.5.6 Ambient air temperature 52
9.5.7 Interpretation of oscillograms 52
9.5.8 Acceptability of test results 52
9.6 Verification of the cut-off current characteristics 53
9.6.1 Test method 53
9.6.2 Acceptability of test results 53
9.7 Verification of I^2t characteristics and overcurrent selectivity 53
9.7.1 Test method 53
9.7.2 Acceptability of test results 53
9.7.3 Verification of compliance for fuse-links at 0,01 s 53
9.7.4 Verification of overcurrent selectivity 54
9.8 Verification of the degree of protection of enclosures 54
9.9 Verification of resistance to heat 54
9.10 Verification of non-deterioration of contacts 54
9.10.1 General 54
9.10.2 Arrangement of the fuse 54
9.10.3 Test method 54
9.10.4 Acceptability of test results 54
9.11 Mechanical and miscellaneous tests 55
9.11.1 Mechanical strength 55
9.11.2 Miscellaneous tests 55
9.12 Test of durability of markings 58
Annex A (informative) Measurement of short-circuit power factor 68
Annex B (informative) Calculation of pre-arcing I^2t values for "gG", "gM" and "gU" fuse-links and calculation of operating I^2t values at reduced voltage 71
B.1 Evaluation of the pre-arcing I^2t value at 0,01 s 71
B.2 Calculation of the value of pre-arcing I^2t under the conditions of test no. 2 71
B.3 Calculation of the value of operating I^2t at reduced voltage 71
Annex C (informative) Calculation of cut-off current-time characteristic 72
C.1 Overview 72
C.2 Preliminary note 72
C.3 Definition 72

IECNORM.COM : Click to view the full PDF of IEC 60269-1:2024 RLV

C.4 Characteristic 72
C.5 Test condition 73
C.6 Calculation from the measured values 73
Annex D (informative) Effect of change of ambient temperature and surroundings on the performance of fuse-links 76
D.1 Effect of increase of ambient temperature 76
D.1.1 On current rating 76
D.1.2 On temperature rise 76
D.1.3 On conventional fusing and non-fusing current (I_f and I_{nf}) 76
D.1.4 For motor starting conditions 76
D.2 Effect of decrease of ambient air temperature 76
D.3 Effect of installation conditions 76
Annex E (normative) Particular requirements for fuse-bases with screwless-type terminals for external copper conductors 77
E.1 General 77
E.3 Terms and definitions 77
E.7 Marking 78
E.8 Standard conditions for construction 78
E.8.1 Fixed connections including terminals 78
E.8.2 Dimensions of connectable conductors 78
E.8.3 Connectable cross-sectional areas 79
E.8.4 Insertion and disconnecting of conductors 79
E.8.5 Design and construction of terminals 79
E.8.6 Resistance to ageing 80
E.9 Tests 80
E.9.1 Test of reliability of terminals 80
E.9.2 Tests of reliability of terminals for external conductors: mechanical strength 80
E.9.3 Cycling test 81
Bibliography 84

Figure 1 – Diagram illustrating the means of verification of the time-current characteristic, using the results of the tests at the "gate" currents (example) 59
Figure 2 – Overload curve and time-current characteristic for "a" fuse-links 60
Figure 3 – Time-current zone for aM fuses 61
Figure 4 – General presentation of the cut-off characteristics for a series of AC fuse-links 62
Figure 5 – Typical diagram of the circuit used for breaking capacity test (see 9.5) 63
Figure 6 – Interpretation of oscillograms taken during the AC breaking-capacity tests (see 9.5.7) 64
Figure 7 – Interpretation of oscillograms taken during the DC breaking-capacity tests (see 9.5.7) 65
Figure 8 – Glow-wire and position of the thermocouple 66
Figure 9 – Test apparatus (example) 67
Figure A.1 – Determination of circuit-impedance for calculation of power factor in accordance with method I 70
Figure C.1 – Cut-off current characteristic as a function of actual pre-arcing time 75
Figure E.1 – Connecting samples 82

IECNORM.COM : Click to view the full PDF of IEC 60269-1:2024 RLV

Figure E.2 – Examples of terminals 83

Table 1 – Standard values of AC rated voltages for fuses 20
Table 2 – Preferred values of DC rated voltages for fuses 20
Table 3 – Conventional time and current for "gG", and "gM" fuse-links 22
Table 4 – Gates for specified pre-arcing times of "gG" and "gM" fuse-links[a] 23
Table 5 – Gates for "aM ' fuse-links (all rated currents) 23
Table 6 – Temperature rise limits $\Delta T = (T - T_a)$ for terminals 27
Table 7 – Maximum arc voltage 28
Table 8 – Pre-arcing I^2t values at 0,01 s for "gG" and "gM" fuse-links 29
Table 9 – Rated impulse withstand voltage 30
Table 10 – Minimum clearances in air 30
Table 11 – Minimum creepage distances 31
Table 12 – Survey of complete tests on fuse-links and number of fuse-links to be tested 35
Table 13 – Survey of tests on fuse-links of smallest rated current of homogeneous series and number of fuse-links to be tested 36
Table 14 – Survey of tests on fuse-links of rated currents between the largest and the smallest rated current of a homogeneous series and number of fuse-links to be tested 37
Table 15 – Survey of complete tests on fuse-holders and number of fuse-holders to be tested 37
Table 16 – Test voltage 39
Table 17 – Test voltage across the poles for the verification of the suitability for isolation 40
Table 18 – Cross-sectional area of copper conductors for tests corresponding to Subclauses 9.3 and 9.4 42
Table 19 – Cross-section areas of the copper conductors for the test of "aM" fuses 45
Table 20 – Table for test in Subclause 9.4.3.5 46
Table 21 – Values for breaking-capacity tests on AC fuses 49
Table 22 – Values for breaking-capacity tests on DC fuses 50
Table E.1 – Connectable conductors 79
Table E.2 – Cross-sections of copper conductors connectable to terminals 79
Table E.3 – Pull forces 81

IECNORM.COM : Click to view the full PDF of IEC 60269-1:2024 RLV

INTERNATIONAL ELECTROTECHNICAL COMMISSION

LOW-VOLTAGE FUSES –

Part 1: General requirements

FOREWORD

1) The International Electrotechnical Commission (IEC) is a worldwide organization for standardization comprising all national electrotechnical committees (IEC National Committees). The object of IEC is to promote international co-operation on all questions concerning standardization in the electrical and electronic fields. To this end and in addition to other activities, IEC publishes International Standards, Technical Specifications, Technical Reports, Publicly Available Specifications (PAS) and Guides (hereafter referred to as "IEC Publication(s)"). Their preparation is entrusted to technical committees; any IEC National Committee interested in the subject dealt with may participate in this preparatory work. International, governmental and non-governmental organizations liaising with the IEC also participate in this preparation. IEC collaborates closely with the International Organization for Standardization (ISO) in accordance with conditions determined by agreement between the two organizations.

2) The formal decisions or agreements of IEC on technical matters express, as nearly as possible, an international consensus of opinion on the relevant subjects since each technical committee has representation from all interested IEC National Committees.

3) IEC Publications have the form of recommendations for international use and are accepted by IEC National Committees in that sense. While all reasonable efforts are made to ensure that the technical content of IEC Publications is accurate, IEC cannot be held responsible for the way in which they are used or for any misinterpretation by any end user.

4) In order to promote international uniformity, IEC National Committees undertake to apply IEC Publications transparently to the maximum extent possible in their national and regional publications. Any divergence between any IEC Publication and the corresponding national or regional publication shall be clearly indicated in the latter.

5) IEC itself does not provide any attestation of conformity. Independent certification bodies provide conformity assessment services and, in some areas, access to IEC marks of conformity. IEC is not responsible for any services carried out by independent certification bodies.

6) All users should ensure that they have the latest edition of this publication.

7) No liability shall attach to IEC or its directors, employees, servants or agents including individual experts and members of its technical committees and IEC National Committees for any personal injury, property damage or other damage of any nature whatsoever, whether direct or indirect, or for costs (including legal fees) and expenses arising out of the publication, use of, or reliance upon, this IEC Publication or any other IEC Publications.

8) Attention is drawn to the Normative references cited in this publication. Use of the referenced publications is indispensable for the correct application of this publication.

9) IEC draws attention to the possibility that the implementation of this document may involve the use of (a) patent(s). IEC takes no position concerning the evidence, validity or applicability of any claimed patent rights in respect thereof. As of the date of publication of this document, IEC had not received notice of (a) patent(s), which may be required to implement this document. However, implementers are cautioned that this may not represent the latest information, which may be obtained from the patent database available at https://patents.iec.ch. IEC shall not be held responsible for identifying any or all such patent rights.

IECNORM.COM : Click to view the full PDF of IEC 60269-1:2024 RLV

IEC 60269-1 has been prepared by subcommittee 32B: Low-voltage fuses, of IEC technical committee 32: Fuses. It is an International Standard.

This fifth edition cancels and replaces the fourth edition published in 2006, Amendment 1:2009 and Amendment 2:2014. This edition constitutes a technical revision.

This edition includes the following significant technical changes with respect to the previous edition:

a) New numbering, editorial corrections and normative references updated;

b) Term "discrimination" replaced by "selectivity" and "utilization category" by "utilization class";

c) Term "fuses for authorized and unskilled persons" updated;

d) Replacement of fuse-link added;

e) Standard values for AC and DC voltages updated;

f) Rated currents 425A, 355A, and 1 600A added;

g) Marking: requirements and tests separated to the relevant subclauses;

h) Requirements for temperature rise limited to terminal temperature rise only;

i) Graphic symbol for fuse-base updated,

The text of this International Standard is based on the following documents:

Draft	Report on voting
32B/748/FDIS	32B/756/RVD

Full information on the voting for its approval can be found in the report on voting indicated in the above table.

The language used for the development of this International Standard is English.

This document was drafted in accordance with ISO/IEC Directives, Part 2, and developed in accordance with ISO/IEC Directives, Part 1 and ISO/IEC Directives, IEC Supplement, available at www.iec.ch/members_experts/refdocs. The main document types developed by IEC are described in greater detail at www.iec.ch/publications.

IEC 60269 consists of the following parts, under the general title *Low-voltage fuses*:

Part 1: General requirements

Part 2: Supplementary requirements for fuses for use by authorized persons (fuses mainly for industrial application) – Examples of standardized systems of fuses A to I

Part 3: Supplementary requirements for fuses for use by unskilled persons (fuses mainly for household or similar application) – Examples of standardized systems of fuses A to F

Part 4: Supplementary requirements for fuse-links for the protection of semiconductor devices

Part 5: Guidance for the application of low-voltage fuses

Part 6: Supplementary requirements for fuse-links for the protection of solar photovoltaic energy systems

Part 7: Battery Fuses

For reasons of convenience, when a part of this publication has come from other publications, a remark to this effect has been inserted in the text.

The committee has decided that the contents of this document will remain unchanged until the stability date indicated on the IEC website under webstore.iec.ch in the data related to the specific document. At this date, the document will be

- reconfirmed,
- withdrawn, or
- revised.

IECNORM.COM : Click to view the full PDF of IEC 60269-1:2024 RLV

LOW-VOLTAGE FUSES –

Part 1: General requirements

1 Scope

This part of IEC 60269 is applicable to fuses incorporating enclosed current-limiting fuse-links with rated breaking capacities of not less than 6 kA, intended for protecting power-frequency AC circuits of nominal voltages not exceeding 1 000 V or DC circuits of nominal voltages not exceeding 1 500 V.

Subsequent parts of this standard, referred to herein, cover supplementary requirements for such fuses intended for specific conditions of use or applications.

Fuse-links intended to be included in fuse-switch combinations according to IEC 60947-3 should also comply with the following requirements.

As far as not stated in subsequent parts for fuse-links, details of performance (see 3.2.4) on DC circuits should be stated in the manufacturer's literature.

NOTE 1 Modifications of, and supplements to, this document required for certain types of fuses for particular applications – for example, certain fuses for rolling stock, or fuses for high-frequency circuits – will be covered, if necessary, by separate standards.

NOTE 2 This document does not apply to miniature fuses, these being covered by IEC 60127.

The object of this standard series is to establish the characteristics of fuses or parts of fuses (fuse-base, fuse-carrier, fuse-link) in such a way that they can be replaced by other fuses or parts of fuses having the same characteristics provided that they are interchangeable as far as their dimensions are concerned. For this purpose, this standard series refers in particular to

– the following characteristics of fuses:
  - rated values;
  - insulation;
  - temperature rise in normal service;
  - power dissipation and acceptable power dissipation;
  - time/current characteristics;
  - breaking capacity;
  - cut-off current characteristics and their I^2t characteristics.
– type test for verification of the characteristics of fuses;
– the marking of fuses.

2 Normative references

The following documents are referred to in the text in such a way that some or all of their content constitutes requirements of this document. For dated references, only the edition cited applies. For undated references, the latest edition of the referenced document (including any amendments) applies.

IEC 60269-2, *Low-voltage fuses – Part 2: Supplementary requirements for fuses for use by authorized persons (fuses mainly for industrial application) – Examples of standardized systems of fuses A to K*

IECNORM.COM : Click to view the full PDF of IEC 60269-1:2024 RLV

IEC 60529, *Degrees of protection provided by enclosures (IP Code)*

IEC 60584-1:2013, *Thermocouples – Part 1: EMF specifications and tolerances*

IEC 60617, *Graphical symbols for diagrams*

IEC 60664-1:2002, *Insulation coordination for equipment within low-voltage supply systems – Part 1: Principles, requirements and tests*

3 Terms and definitions

For the purposes of this document, the following terms and definitions apply.

ISO and IEC maintain terminological databases for use in standardization at the following addresses:

- IEC Electropedia: available at http://www.electropedia.org/
- ISO Online browsing platform: available at http://www.iso.org/obp

NOTE For general definitions concerning fuses, see also IEC 60050-441.

3.1 Fuses and their component parts

3.1.1
fuse
device that by the fusing of one or more of its specially designed and proportioned components opens the circuit in which it is inserted by breaking the current when this exceeds a given value for a sufficient time. The fuse comprises all the parts that form the complete device

[SOURCE: IEC 60050-441:1984, 441-18-01]

3.1.2
fuse-holder
combination of the fuse-base with its fuse-carrier

Note 1 to entry: Where, in this document, the term "fuse-holder" is used, it covers fuse-bases and/or fuse-carriers, if no clearer distinction is necessary.

[SOURCE: IEC 60050-441:1984, 441-18-14]

3.1.2.1
fuse-base (fuse-mount)
fixed part of a fuse provided with contacts and terminals

Note 1 to entry: Where applicable, covers are considered as part of the fuse-base.

[SOURCE: IEC 60050-441:1984, 441-18-02]

3.1.2.2
fuse-carrier
movable part of a fuse designed to carry a fuse-link

[SOURCE: IEC 60050-441:1984, 441-18-13]

IECNORM.COM : Click to view the full PDF of IEC 60269-1:2024 RLV

3.1.3
fuse-link
part of a fuse including the fuse-element(s), intended to be replaced after the fuse has operated

[SOURCE: IEC 60050-441:1984, 441-18-09]

3.1.4
fuse-contact
two or more conductive parts designed to ensure circuit continuity between a fuse-link and the corresponding fuse-holder

3.1.5
fuse-element
part of the fuse-link designed to melt under the action of current exceeding some definite value for a definite period of time

Note 1 to entry: The fuse-link may comprise several fuse-elements in parallel.

[SOURCE: IEC 60050-441:1984, 441-18-08]

3.1.6
indicating device (indicator)
part of a fuse provided to indicate whether the fuse has operated

[SOURCE: IEC 60050-441:1984, 441-18-17]

3.1.7
striker
mechanical device forming part of a fuse-link which, when the fuse operates, releases the energy required to cause operation of other apparatus or indicators or to provide interlocking

[SOURCE: IEC 60050-441:1984, 441-18-18]

3.1.8
terminal
conductive part of a fuse provided for electric connection to external circuits

Note 1 to entry: Terminals may be distinguished according to the kind of circuits for which they are intended (for example, main terminal, earth terminal, etc.) and also according to their design (for example, screw terminal, plug terminal, etc.).

3.1.9
dummy fuse-link
test fuse-link with defined power dissipation and dimensions

3.1.10
test rig
defined test fuse-base

3.1.11
gauge-piece
additional part of a fuse-base intended to achieve a degree of non-interchangeability

3.1.12
linked fuse-carrier
fuse-carrier which is mechanically linked to the fuse-base and gives a defined insertion and withdrawal movement to the fuse-link

IECNORM.COM : Click to view the full PDF of IEC 60269-1:2024 RLV

3.2 General terms

3.2.1
enclosed fuse-link
fuse-link in which the fuse-element(s) is (are) totally enclosed, so that during operation within its rating it cannot produce any harmful external effects, for example, due to development of an arc, the release of gas or the ejection of flame or metallic particles

[SOURCE: IEC 60050-441:1984, 441-18-12]

3.2.2
current-limiting fuse-link
fuse-link that during and by its operation in a specified current range, limits the current to a substantially lower value than the peak value of the prospective current

[SOURCE: IEC 60050-441:1984, 441-18-10]

3.2.3
"g" fuse-link
<full-range breaking-capacity fuse-link, formerly general purpose fuse-link>
current-limiting fuse-link capable of breaking under specified conditions all currents, which cause melting of the fuse-element up to its rated breaking capacity

3.2.4
"a" fuse-link
<partial-range breaking-capacity fuse-link, formerly back-up fuse-link>
current-limiting fuse-link capable of breaking under specified conditions all currents between the lowest current indicated on its operating time-current characteristic ($k_2 I_n$ in Figure 2) and its rated breaking capacity

Note 1 to entry: "a" fuse-links are generally used to provide short-circuit protection. Where protection is required against over-currents less than $k_2 I_n$ in Figure 2, they are used in conjunction with another suitable switching device designed to interrupt such small overcurrents.

3.2.5
temperatures

3.2.5.1
ambient air temperature
T_a
temperature of the air surrounding the fuse (at a distance of about 1 m from the fuse or its enclosure, if any)

3.2.5.2
fuse-component temperature
T
<fuse-component (contact, terminal, etc.)>
temperature of the relevant part

3.2.6
overcurrent selectivity
coordination of the relevant characteristics of two or more overcurrent protective devices such that, on the occurrence of overcurrents within stated limits, the device intended to operate within these limits does so, while the other(s) do(es) not

[SOURCE: IEC 60050-441:1984, 441-17-15, modified – "discrimination" replaced by "selectivity" in term, "operating" replaced by "relevant" and "incidence" replaced by "occurrence" in definition]

IECNORM.COM : Click to view the full PDF of IEC 60269-1:2024 RLV

3.2.7
fuse system
family of fuses following the same physical design principles with respect to the shape of the fuse-links, type of contact, etc.

3.2.8
size
specified set of dimensions of fuses within a fuse system

Note 1 to entry: Each individual size covers a given range of rated currents for which the specified dimensions of the fuses remain unchanged.

3.2.9
homogeneous series of fuse-links
series of fuse-links, within a given size, deviating from each other only in such characteristics that for a given test, the testing of one or a reduced number of particular fuse-links of that series may be taken as representative for all the fuse-links of the homogeneous series

Note 1 to entry: The characteristics by which the fuse-links of a homogeneous series may deviate and details on which of the fuse-links shall be tested are specified in association with the tests concerned (see Table 12 and Table 13).

[SOURCE: IEC 60050-441:1984, 441-18-34, modified – Note 1 to entry replaced]

3.2.10
utilization class (of a fuse-link)
combination of specified requirements related to the conditions in which the fuse-link fulfils its purpose, selected to represent a characteristic group of practical applications (see 6.7.1)

3.2.11
fuses for use by authorized and unskilled persons
fuse systems divided into systems for use by authorized persons and for use by unskilled persons

Note 1 to entry: For safe replacement of fuses-links of systems used by authorized persons special skills are necessary.

Authorized person is understood to have the meaning defined for categories BA 4 "instructed" (IEC 60050-826:2022, 826-18-02) and BA 5 "skilled" (IEC 60050-826:2022, 826-18-01).

National regulations might supersede these definitions.

Instructed persons are persons adequately advised or supervised by skilled persons to enable them to avoid dangers which electricity may create (operating and maintenance staff).

Skilled persons have technical knowledge or sufficient experience to enable them to avoid dangers which electricity may create (engineers and technicians). For example, dangers for persons may come from touching live parts during operation and from replacing fuse-links under load.

Unskilled persons do not have technical knowledge or sufficient experience. To avoid dangers, which electricity may create, the relevant part of the fuse standard shall provide requirements for maximum safety in service. IEC 60269-3 provides four systems for use by unskilled persons.

3.2.12
replacement of a fuse link
exchange of a fuse-link

3.2.13
non-interchangeability
limitations on shape and/on dimensions with the object of avoiding in a specific fuse-base the inadvertent use of fuse-links having electrical properties other than those ensuring the desired degree of protection

[SOURCE: IEC 60050-441:1984, 441-18-33]

IECNORM.COM : Click to view the full PDF of IEC 60269-1:2024 RLV

3.3 Characteristic quantities

3.3.1
rating
general term employed to designate the characteristic values that together define the working conditions upon which the tests are based and for which the equipment is designed

[SOURCE: IEC 60050-441:1984, 441-18-36]

Note 1 to entry: Rated values usually stated for low-voltage fuses are: voltage, current, breaking capacity, power dissipation and acceptable power dissipation, and frequency, where applicable. In the case of AC, rated voltage and rated current are stated as r.m.s. symmetrical values; in the case of DC, when ripple is present, the rated voltage is stated as a mean value, the rated current as an RMS value. The above applies to any value of voltage and current, if not indicated otherwise.

3.3.2
prospective current (of a circuit and with respect to a fuse)
current that would flow in the circuit if the fuse-link(s) is(are) replaced by a conductor of negligible impedance

Note 1 to entry: For AC, the prospective current is expressed by the RMS value of the AC component.

Note 2 to entry: The prospective current is the quantity to which the breaking capacity and characteristics of the fuse are normally referred, e.g. I^2t and cut-off current characteristics (see 9.5.7).

[SOURCE: IEC 60050-441:1984, 441-17-01, modified – "each pole of the switching device were" replaced by "the fuse-link(s) is", Note to entry replaced]

3.3.3
gates
limiting values within which the characteristics, for example time-current characteristics, are obtained.

3.3.4
breaking capacity of a fuse
value of prospective current that a fuse is capable of breaking at a stated voltage under prescribed conditions of use and behaviour

[SOURCE: IEC 60050-441:1984, 441-17-08, modified – "switching device" removed from term and definition, Note to entry removed]

3.3.5
breaking range
range of prospective currents within which the breaking capacity of a fuse-link is assured

3.3.6
cut-off current
maximum instantaneous value reached by the current during the breaking operation of a fuse-link when it operates in such a manner as to prevent the current from reaching the otherwise attainable maximum

3.3.7
cut-off current characteristic; let-through current characteristic
curve giving the cut-off current as a function of the prospective current under stated conditions of operation

Note 1 to entry: In the case of AC, the values of the cut-off currents are the maximum values which can be reached whatever the degree of asymmetry. In the case of DC, the values of the cut-off currents are the maximum values reached related to the time constants as specified.

[SOURCE: IEC 60050-441:1984, 441-17-14]

IECNORM.COM : Click to view the full PDF of IEC 60269-1:2024 RLV

3.3.8
peak withstand current (of a fuse-holder)
value of cut-off current that the fuse-holder can withstand

Note 1 to entry: The peak withstand current is not less than the highest cut-off current of any fuse-link with which the fuseholder is intended to be associated.

3.3.9
pre-arcing time; melting time
interval of time between the beginning of a current large enough to cause a break in the fuse-element(s) and the instant when an arc is initiated

[SOURCE: IEC 60050-441:1984, 441-18-21]

3.3.10
arcing time of a fuse-link
interval of time between the instant of the initiation of the arc in a fuse and the instant of final arc extinction in the same fuse-link

[SOURCE: IEC 60050-441:1984, 441-17-37 modified – "pole" removed from term and definition]

3.3.11
operating time; total clearing time
sum of the pre-arcing time and the arcing time

[SOURCE: IEC 60050-441:1984, 441-18-22]

3.3.12
I^2t; Joule integral
integral of the square of the current over a given time interval:

$$I^2t = \int_{t_0}^{t_1} i^2 \mathrm{d}t$$

Note 1 to entry: The pre-arcing I^2t is the I^2t integral extended over the pre-arcing time of the fuse.

Note 2 to entry: The operating I^2t is the I^2t integral extended over the operating time of the fuse.

Note 3 to entry: The energy, in joules, released in 1 Ω of resistance in a circuit protected by a fuse is equal to the value of the operating I^2t expressed in A^2s.

[SOURCE: IEC 60050-441:1984, 441-18-23]

3.3.13
I^2t characteristic
curve giving I^2t values (pre-arcing I^2t and/or operating I^2t) as a function of prospective current under stated conditions of operation

3.3.14
I^2t zone
range contained by the minimum pre-arcing I^2t characteristic and the maximum operating I^2t characteristic, under specified conditions.

3.3.15
rated current of a fuse-link
I_n
value of current that the fuse-link can carry continuously without deterioration under specified conditions

IECNORM.COM : Click to view the full PDF of IEC 60269-1:2024 RLV

3.3.16
time-current characteristic
curve giving the time, e.g. pre-arcing time or operating time as a function of the prospective current under stated conditions of operation

Note 1 to entry: For times longer than 0,1 s, for practical purposes the difference between pre-arcing and operating time is negligible.

[SOURCE: IEC 60050-441:1984, 441-17-13]

3.3.17
time-current zone
range contained by the minimum pre-arcing time-current characteristics and the maximum operating time-current characteristic, under specified conditions

3.3.18
conventional non-fusing current
I_{nf}
value of current specified as that which the fuse-link is capable of carrying for a specified time (conventional time) without melting

[SOURCE: IEC 60050-441:1984, 441-18-27]

3.3.19
conventional fusing current
I_f
value of current specified as that which causes operation of the fuse-link within a specified time (conventional time)

[SOURCE: IEC 60050-441:1984, 441-18-28]

3.3.20
overload curve of an "a" fuse-link
curve showing the time for which an "a" fuse-link is able to carry the current without deterioration

SEE: 9.4.3.4 and Figure 2

3.3.21
power dissipation (of a fuse-link)
power released in a fuse-link carrying a stated value of electric current under prescribed conditions of use and behaviour

Note 1 to entry: The prescribed conditions of use and behaviour generally include a constant RMS value of the electric current after steady-state temperature conditions are reached.

[SOURCE: IEC 60050-441:1984/AMD1:2000, 441-18-38]

3.3.22
acceptable power acceptance (of a fuse-base or a fuse-holder)
stated value of power dissipation of a fuse-link which a fuse-base or a fuse-holder can accept under prescribed conditions of use and behavior

[SOURCE: IEC 60050-441:1984/AMD1:2000, 441-18-39]

IECNORM.COM : Click to view the full PDF of IEC 60269-1:2024 RLV

3.3.23
recovery voltage
voltage which appears across the terminals of a pole of a fuse after the breaking of the current

Note 1 to entry: This voltage may be considered in two successive intervals of time, one during which a transient voltage exists (see 2.3.23.1) followed by a second one during which only the power frequency or DC recovery voltage (see 2.3.23.2) exists.

[SOURCE: IEC 60050-441:1984, 441-17-25, modified – "switching device" removed from definition, Note 1 to entry modified]

3.3.23.1
transient recovery voltage
abbreviation TRV
recovery voltage during the time in which it has a significant transient character

Note 1 to entry: The transient recovery voltage may be oscillatory or non-oscillatory or a combination of these, depending on the characteristics of the circuit and the fuse. It includes the voltage shift of the neutral of a polyphase circuit.

Note 2 to entry: The transient recovery voltage in three-phase circuits is, unless otherwise stated, that which appears across the first pole to clear, because this voltage is generally higher than that which appears across each of the other two poles.

[SOURCE: IEC 60050-441:1984, 441-17-26]

3.3.23.2
power-frequency or DC recovery voltage
recovery voltage after the transient voltage phenomena have subsided

Note 1 to entry: The power frequency or DC recovery voltage may be referred to as a percentage of the rated voltage.

[SOURCE: IEC 60050-441:1984, 441-17-27, modified – "or DC" added to term, Note 1 to entry added)]

3.3.24
arc voltage of a fuse
instantaneous value of the voltage which appears across the terminals of a fuse during the arcing time

[SOURCE: IEC 60050-441:1984, 441-18-30]

3.3.25
isolating distance (for a fuse)
shortest distance between the fuse-base contacts or any conductive parts connected thereto measured on a fuse with the fuse-link or the fuse-carrier removed

[SOURCE: IEC 60050-441:1984, 441-18-06]

4 Conditions for operation in service

4.1 General

Where the following conditions apply, fuses complying with this document are deemed capable of operating satisfactorily without further qualification. These conditions also apply for tests except those otherwise specified in Clause 9.

IECNORM.COM : Click to view the full PDF of IEC 60269-1:2024 RLV

4.2 Ambient air temperature (T_a)

The ambient air temperature T_a (see 3.2.5.1) does not exceed 40 °C, its mean value measured over a period of 24 h does not exceed 35 °C, and its mean value measured over a period of one year is lower.

The minimum value of the ambient air temperature is −5 °C.

In cases where the temperature conditions vary significantly from these values, this should be taken into consideration from the points of view of operation, temperature rise, etc. See Annex D.

NOTE The time-current characteristics given are related to a reference ambient air temperature of 20 °C. These time-current characteristics also approximately apply to a temperature of 30 °C.

4.3 Altitude

The altitude of the site of installation of the fuses does not exceed 2 000 m above sea-level.

4.4 Atmospheric conditions

The air is clean and its relative humidity does not exceed 50 % at the maximum temperature of 40 °C.

Higher relative humidity is permitted at lower temperatures, for example, 90 % at 20 °C.

Under these conditions, moderate condensation may occasionally occur due to variation in temperature.

Where fuses are to be used under conditions different from those mentioned in 4.1, 4.2 and 4.3, in particular outdoors without protection, the information shall be given in the manufacturer's literature. This applies also in cases where deposits of sea salt or abnormal deposits of industrial origin may occur.

4.5 Voltage

The system voltage has a maximum value not exceeding 110 % of the rated voltage of the fuse. For DC when obtained by rectifying AC, the ripple shall not cause a variation of more than 5 % above or 9 % below the mean value of 110 % of the rated voltage.

For fuses rated 690 V the maximum system voltage shall not exceed 105 % of the rated voltage of the fuse.

NOTE Attention is drawn to the fact that the indicating device or striker of a fuse may not operate if the fuse-link operates at a voltage, which is considerably lower than its rated voltage (see 9.4.3.6).

4.6 Current

The currents to be carried and to be broken are within the range specified in 8.4 and 8.5.

4.7 Frequency, power factor and time constant

4.7.1 Frequency

For AC the frequency is the rated frequency of the fuse-link.

IECNORM.COM : Click to view the full PDF of IEC 60269-1:2024 RLV

4.7.2 Power factor

For AC the power factor is not lower than that shown in Table 20, appropriate to the value of prospective current.

4.7.3 Time constant (τ)

For DC the time constant corresponds to that shown in Table 21.

Some service duties may be found which exceed the limits shown in Table 21 as regards time constant. For such an application, a fuse-link which has been tested to verify that it meets the required time constant and is marked accordingly shall be used.

4.8 Conditions of installation

The fuse is installed in accordance with the manufacturer's instructions.

If the fuse is likely to be exposed in service to abnormal vibrations or shocks, the manufacturer should be consulted.

4.9 Utilization class

Utilization classes (for example, "gG") are specified according to 6.7.1.

4.10 Selectivity of fuse-links

Limits of selectivity for times greater than 0,1 s are given in Table 2 and Table 3.

For "gG" and "gM" fuse-links pre-arcing I^2t values are given in Table 7 and operating I^2t values are given in subsequent parts. Values for other breaking ranges and utilization categories are shown in subsequent parts.

5 Classification

Fuses are classified according to Clause 6 and the subsequent parts.

6 Characteristics of fuses

6.1 Summary of characteristics

6.1.1 General

The characteristics of a fuse shall be stated in the following terms, where such terms are applicable.

6.1.2 Fuse-holders

a) Rated voltage (see 6.2)

b) Rated current (see 6.3.2)

c) Kind of current and rated frequency if applicable (see 6.4)

d) Rated acceptable power dissipation (see 6.5)

e) Dimensions or size

f) Number of poles, if more than one

g) Peak withstand current

IECNORM.COM : Click to view the full PDF of IEC 60269-1:2024 RLV

6.1.3 Fuse-links

a) Rated voltage (see 6.2)
b) Rated current (see 6.3.1)
c) Kind of current and rated frequency, if applicable (see 6.4)
d) Rated power dissipation (see 6.5)
e) Time-current characteristics (see 6.6)
f) Breaking range (see 6.7.1)
g) Rated breaking capacity (see 6.7.2)
h) Cut-off current characteristics (see 6.8.1)
i) I^2t characteristics (see 6.8.2)
k) Dimensions or size

6.1.4 Complete fuses

Degree of protection according to IEC 60529.

6.2 Rated voltage

For AC the standard values of rated voltages are given in Table 1.

Table 1 – Standard values of AC rated voltages for fuses

Series I V	Series II V
	120
	208
230	240
	277
400	415
500	480
690	600
1 000	347

For DC the standard values of rated voltages are given in Table 2.

Table 2 – Preferred values of DC rated voltages for fuses

Series I V	Series II V
	110
220	
	250
400	
440	460
500	
	600
750	
1 000	
	1 200
1 500	

IECNORM.COM : Click to view the full PDF of IEC 60269-1:2024 RLV

For specific applications, rated voltage of different values to Table 1 and Table 2 shall be given in the manufacturer's instructions.

NOTE The rated voltage of the fuse is the lowest value of the rated voltages of its parts (fuse-holder, fuse-link).

6.3 Rated current

6.3.1 Rated current of the fuse-link

The preferred rated currents for the fuse-links are the following values expressed in A:

2 – 4 – 6 – 8 – 10 – 12 – 13 – 16 – 20 – 25 – 32 – 35 – 40 – 50 – 63 – 80 – 100 – 125 – 160 – 200 – 224 – 250 – 315 – 355 – 400 – 425 – 500 – 630 – 800 – 1 000 – 1 250 – 1 600

If it is necessary to choose lower values or intermediate values or higher values, these values should be selected from the series R10 of ISO 3, and in exceptional cases, from R20 or R40 of ISO 3.

6.3.2 Rated current of the fuse-holder

The rated current of the fuse-holder, expressed in amperes, should be selected from the series of rated currents of fuse-links if not otherwise specified in subsequent parts. For "gG" and "aM" fuses, the rated current of the fuse-holder represents the highest rated current of the fuse-link with which it is intended to be used.

6.4 Rated frequency (see 7.1 and 7.2)

The absence of any marking regarding rated frequency shall imply that the fuse meets the conditions laid down in this document for frequencies between 45 Hz and 62 Hz only.

6.5 Rated power dissipation of a fuse-link and rated acceptable power dissipation of a fuse-holder.

The rated power dissipation of a fuse-link is stated by the manufacturer if not otherwise specified in subsequent parts. That value shall not be exceeded under specified test conditions.

The rated acceptable power dissipation of a fuse-holder is stated by the manufacturer if not otherwise specified in the subsequent parts. It is intended to be the maximum power dissipation the fuse-holder can tolerate under specified test conditions without exceeding the specified temperature rise.

6.6 Limits of time-current characteristics

6.6.1 General

The limits are based on a reference ambient air temperature T_a of +20 °C.

6.6.2 Time-current characteristics, time-current zones

They depend on the design of the fuse-link, and, for a given fuse-link, on the ambient air temperature and the cooling conditions.

NOTE For ambient air temperatures deviating from the temperature range according to 4.1, consultation with the manufacturer is necessary.

For fuse-links not complying with the standardized time-current zones as specified in the subsequent parts, the manufacturer should keep available (with their tolerances):

– the pre-arcing and operating time-current characteristics;

IECNORM.COM : Click to view the full PDF of IEC 60269-1:2024 RLV

or

– the time-current zone.

NOTE For pre-arcing times smaller than 0,1 s, the manufacturer should keep available I^2t characteristics with their tolerances (see 6.8.3).

When the time-current characteristics are presented for pre-arcing times exceeding 0,1 s, they should be given with current as abscissa and time as ordinate. Logarithmic scales shall be used on both coordinate axes.

The basis of the logarithmic scales (the dimensions of one decade) shall be in the ratio 2/1 with the longer dimensions on the abscissa. However, because of long-established practice in other countries (for example UL fuse systems), a ratio of 1/1 is recognized as an alternative presentation.

6.6.3 Conventional times and currents

The conventional times and currents for "gG" and "gM" fuse-links are given in Table 3.

Table 3 – Conventional time and current for "gG", and "gM" fuse-links

Rated current I_n for "gG"	Conventional time	Conventional current	
Characteristic current I_{ch} for "gM"[b] A	h	I_{nf}	I_f
I_n < 16	1	a	a
16 ≤ I_n ≤ 63	1		
63 < I_n ≤ 160	2	1,25 I_n	1,6 I_n
160 < I_n ≤ 400	3		
400 < I_n	4		

[a] Values for fuse-links with rated current less than 16 A are given in subsequent parts.

[b] For "gM" fuse-links, see 6.7.1.

6.6.4 Gates

For "gG" and "gM" fuse-links, the gates given in Table 4 apply.

IECNORM.COM : Click to view the full PDF of IEC 60269-1:2024 RLV

Table 4 – Gates for specified pre-arcing times of "gG" and "gM" fuse-links[a]

1 I_n for "gG" I_{ch} for "gM" [b] A	2 I_{min} (10 s) [c] A	3 I_{max} (5 s) A	4 I_{min} (0,1 s) A	5 I_{max} (0,1 s) A
13	24	65	65	130
16	33	65	85	150
20	42	85	110	200
25	52	110	150	260
32	75	150	200	350
35	83	175	225	445
40	95	190	260	450
50	125	250	350	610
63	160	320	450	820
80	215	425	610	1 100
100	290	580	820	1 450
125	355	715	1 100	1 910
160	460	950	1 450	2 590
200	610	1 250	1 910	3 420
224	600	1 600	2 000	4 300
250	750	1 650	2 590	4 500
315	1 050	2 200	3 420	6 000
355	1 100	2 750	3 500	7 700
400	1 420	2 840	4 500	8 060
425	1 350	3 300	4 500	9 500
450	1 600	3 300	5 250	9 300
500	1 780	3 800	6 000	10 600
630	2 200	5 100	8 060	14 140
800	3 060	7 000	10 600	19 000
1 000	4 000	9 500	14 140	24 000
1 250	5 000	13 000	19 000	35 000
1 600	7 500	16 000	24 000	43 000

[a] Values for fuses with rated current less than 13A are given in subsequent parts.

[b] For "gM" fuse-links, see 6.7.1.

[c] I_{min} (10 s) is the minimum value of current for which the pre-arcing time is not less than 10 s.

For "aM" fuses the standard gates for time- current characteristics based on reference ambient air temperature of 20 °C are given in Table 5 and Figure 3. The standardized k-factors are k_0 = 1,5; k_1 = 4 and k_2 = 6,3.

Table 5 – Gates for "aM ' fuse-links (all rated currents)

	4 I_n	6,3 I_n	8 I_n	10 I_n	12,5 I_n	19 I_n
$t_{operating}$	-	60 s	-	-	0,5 s	0,10 s
$t_{pre\text{-}arcing}$	60 s	-	0,5 s	0,2 s	-	-

6.7 Breaking range and breaking capacity

6.7.1 Breaking range and utilization category

The first letter shall indicate the breaking range:

– "g" fuse-links (full-range breaking-capacity fuse-link);

– "a" fuse-links (partial-range breaking-capacity fuse-link).

IECNORM.COM : Click to view the full PDF of IEC 60269-1:2024 RLV

The second letter shall indicate the utilization category; this letter defines with accuracy the time-current characteristics, conventional times and currents, gates.

6.7.2 Rated breaking capacity

The rated breaking capacity of a fuse-link is given by the manufacturer corresponding to the rated voltage. Values of minimum rated breaking capacity are given in subsequent parts.

6.8 Cut-off current and I^2t characteristics

6.8.1 General

The value for cut-off and I^2t characteristics shall take into account manufacturing tolerances and shall refer to the service conditions as specified in subsequent parts, for example, the values of voltage, frequency and power factor.

6.8.2 Cut-off current characteristics

The cut-off current characteristics shall represent the maximum instantaneous values of current likely to be experienced in service (see 9.6.1 and Annex C).

Where the cut-off current characteristics are required, and unless specified in subsequent parts, they should be given by the manufacturer according to the example shown in Figure 4, in a double logarithmic presentation with the prospective current as abscissa.

6.8.3 I^2t characteristics

The pre-arcing I^2t characteristics for pre-arcing times of less than 0,1 s down to a time corresponding to the rated breaking capacity shall be given by the manufacturer. They shall represent the lowest values likely to be experienced in service as a function of the prospective current.

The operating I^2t characteristics with specified voltages as parameters shall be given by the manufacturer for pre-arcing times less than 0,1 s. They shall represent the highest values likely to be experienced in service as a function of the prospective current.

When presented graphically, the I^2t characteristics shall be given with prospective current as abscissa and I^2t values as ordinate. Logarithmic scales shall be used on both coordinate axes. (For the use of the logarithmic scales, see 6.6.2.)

7 Markings

7.1 General

The marking shall be durable and easily legible. Compliance is checked by test 9.12.

NOTE 1 The marking for rated current and rated voltage may, for instance, be as follows:

10 A 500 V or 10/500 or $\frac{10}{500}$

NOTE 2 For all parts of fuses relevant symbols from IEC 60417 can be used.

IECNORM.COM : Click to view the full PDF of IEC 60269-1:2024 RLV

7.2 Markings of fuse-holders

The following information shall be marked on all fuse-holders:

– name of the manufacturer or a trade mark by which he may be readily identified;
– manufacturer's identification reference enabling all the characteristics listed in 6.1.2 to be found;
– rated voltage;
– rated current;
– kind of current and rated frequency, when applicable.

A fuse-holder marked with AC ratings may also be used for DC If a fuse-holder contains a removable fuse-base and a removable fuse-carrier. Both should be separately marked for the purpose of identification.

7.3 Markings of fuse-links

The following information shall be marked on all fuse-links except small fuse-links where this is impracticable:

– name of the manufacturer or a trade mark by which he may be readily identified;
– manufacturer's identification reference, enabling all the characteristics listed in 6.1.3 to be found;
– rated voltage;
– rated current;
– breaking range and utilization category (letter code), where applicable (see 6.7.1);
– kind of current and, if applicable, rated frequency (see 6.4).

Fuse-links should be marked separately for AC and DC if the fuse-link is provided for AC and DC.

For small fuse-links, where it is impracticable to include all the specified information on the fuse-link, the trade mark, list reference of the manufacturer, rated voltage and the rated current shall be marked.

8 Standard conditions for construction

8.1 Mechanical design

8.1.1 Replacement of fuse-links

A fuse-link shall have adequate mechanical strength and its contacts shall be securely fixed.

8.1.2 Connections, including terminals

The fixed connections shall be such that the necessary contact force is maintained under the conditions of service and operation.

No contact force on connections shall be transmitted through insulating material other than ceramic or other material with characteristics not less suitable, unless there is sufficient resilience in the metallic parts to compensate for any possible shrinkage or other deformation of the insulating material. Tests are specified in subsequent parts, where necessary.

Terminals shall be such that they cannot turn or be displaced when the connecting screws are tightened, and such that the conductors cannot be displaced. The parts gripping the conductors shall be of metal and shall have such a shape that they cannot unduly damage conductors.

IECNORM.COM : Click to view the full PDF of IEC 60269-1:2024 RLV

Terminals shall be so arranged that they are readily accessible (after removal of covers, if any) under the intended conditions of installation.

NOTE Requirements of screwless-type terminals are given in Annex E.

8.1.3 Fuse-contacts

Fuse-contacts shall be such that the necessary contact force is maintained under the conditions of service and operation, in particular under the conditions corresponding to 8.5.

Contact shall be such that the electromagnetic forces occurring during operation under conditions in accordance with 8.5 shall not impair the electrical connections between

a) the fuse-base and the fuse-carrier;

b) the fuse-carrier and the fuse-link;

c) the fuse-link and the fuse-base, or, if applicable, any other support.

In addition, fuse contacts shall be so constructed and of such material that, when the fuse is properly installed and service conditions are normal, adequate contact is maintained

a) after repeated engagement and disengagement;

b) after being left undisturbed in service for a long period (see 9.10).

Fuse-contacts of copper alloy shall be free from season cracking.

These requirements are verified by the tests according to 9.10, 9.11.2.1 and in Clause 8 of subsequent parts of IEC 60269.

8.1.4 Construction of a gauge-piece

A gauge-piece, if any, shall be so designed that it withstands normal stresses occurring during use.

8.1.5 Mechanical strength of the fuse-link

A fuse-link shall have adequate mechanical strength and its contacts shall be securely fixed.

8.2 Insulating properties and suitability for isolation

The fuses shall be such that they do not lose their insulating properties at the voltages to which they are subjected in normal service. The fuse shall be suitable for isolation when it is in its normal open position, the fuse-link remaining inside the fuse-carrier, or when the fuse-link, and, when applicable, the fuse-carrier is removed. The applicable overvoltage category is specified in subsequent parts.

The fuse shall be deemed to satisfy these conditions if it passes the tests for verification of insulating properties and suitability for isolation in accordance with 9.2.

The minimum creepage distances, clearances and distances through insulating material or sealing compound shall comply with the values specified in subsequent parts.

IECNORM.COM : Click to view the full PDF of IEC 60269-1:2024 RLV

8.3 Temperature rise, power dissipation of the fuse-link and acceptable power dissipation of a fuse-holder

The fuse-holder shall be so designed and proportioned as to carry continuously, under standard conditions of service, the rated current of the fuse-link with which it is provided without exceeding

– the temperature-rise limits specified in Table 6 at the rated acceptable power dissipation of the fuse-holder as indicated by the manufacturer or otherwise specified in subsequent parts.

The fuse-link shall be so designed and proportioned as to carry continuously, under standard conditions of service, its rated current without exceeding

– the rated power dissipation of the fuse-link as indicated by the manufacturer or otherwise specified in the subsequent parts.

In particular, the temperature-rise limits specified in Table 6 shall not be exceeded

– when the rated current of the fuse-link is equal to the rated current of the fuse-holder intended to accommodate this fuse-link;
– when the power dissipation of the fuse-link is equal to the rated acceptable power dissipation of the fuse-holder.

These requirements are verified by the tests according to 9.3.

Table 6 – Temperature rise limits $\Delta T = (T - T_a)$ for terminals

	Contacts	Temperature rise ΔT in K
Terminals	Bare Copper	60
	Bare Brass or tin-plated	65
	Silver-plated or nickel-plated	70 [a)]

[a)] The limit of temperature rise is governed by the use of PVC insulated conductors or for other connection methods or conductors the manufacturer has to give maximum values of temperature rise in his documentation and the conductor rating must be observed. Temperature limits of the fuse and the conductor must be aligned.

8.4 Operation

The fuse-link shall be so designed and proportioned that, when tested in its appropriate test arrangement at rated frequency and an ambient air temperature of (20 ± 5) °C,

– it is able to carry continuously any current not exceeding its rated current;
– it is able to withstand overload conditions as they may occur in normal service (see 9.4.3.4).

For a "g" fuse-link within the conventional time,

– the fuse-link does not operate, when it carries any current not exceeding the conventional non-fusing current (I_{nf});
– it operates when it carries any current equal to or exceeding the conventional fusing current (I_f).

NOTE Time-current zones, if any, are to be considered.

For an "a" fuse-link,

– the fuse-link does not operate when it carries a current not exceeding $k_1 I_n$ for the corresponding time indicated in the overload curve (see Figure 2);

IECNORM.COM : Click to view the full PDF of IEC 60269-1:2024 RLV

– when carrying a current between $k_1 I_n$ and $k_2 I_n$, the fuse-element may melt, provided that the pre-arcing time is greater than the value indicated in the pre-arcing time-current characteristic;

– it operates when it carries a current exceeding $k_2 I_n$ within its time-current zone, including the arcing time.

The time-current values measured in 9.4.3.3 shall fall within the time-current zone provided by the manufacturer.

A fuse-link is deemed to satisfy these conditions if it passes the tests prescribed in 9.4.

8.5 Breaking capacity

The fuse shall be capable of breaking, at rated frequency, and at a voltage not exceeding the recovery voltage specified in 9.5, any circuit having a prospective current between,

– for "g" fuse-links, the current I_f;

– for "a" fuse-links, the current $k_2 I_n$; and

– in the case of AC, the rated breaking capacity at power factors not lower than those shown in Table 21 appropriate to the value of the prospective current;

– in the case of DC, the rated breaking capacity at time constants not greater than those limits shown in Table 22 appropriate to the value of the prospective current.

During operation of the fuse-link in a test circuit as described in 9.5, the arc voltage shall not exceed the values given in Table 7.

NOTE Where fuse-links are used in circuits with system voltages belonging to a range lower than that corresponding to the rated voltage of the fuse-links, consideration should be given to the arc voltage, which should not exceed the value in Table 7 corresponding to the system voltage.

Table 7 – Maximum arc voltage

Rated voltage U_n of the fuse-link V		Maximum arc voltage, peak value V
AC and DC currents	Up to and including 60	1 000
	61 to 300	2 000
	301 to 690	2 500
	691 to 800	3 000
	801 to 1 000	3 500
DC only	1 001 to 1 200	3 500
	1 201 to 1 500	5 000
NOTE For fuse-links having rated current less than 16 A, the maximum arc voltage is not specified in this document but is under consideration.		

A fuse shall be deemed to satisfy these conditions if it passes the tests prescribed in 9.5.

8.6 Cut-off current characteristic

If not otherwise specified in subsequent parts, the values of cut-off current measured as specified in 9.6 shall be less than, or equal to, the values corresponding to the cut-off current characteristics assigned by the manufacturer (see 6.8.2).

NOTE For the cut-off current characteristics as function of the actual pre-arcing time, see Annex C.

IECNORM.COM : Click to view the full PDF of IEC 60269-1:2024 RLV

8.7 I^2t characteristics

The pre-arcing I^2t values verified according to 9.7 shall not be less than the characteristics stated by the manufacturer in accordance with 6.8.3, and lie within the limits given in Table 8 for "gG" and "gM" fuse-links. For pre-arcing times smaller than 0,01 s, limits are given in subsequent parts, if required. Values for "gD" and "gN" fuse-links are given in IEC 60269-2, fuse system H.

The operating I^2t values verified according to 9.7 shall be less than, or equal to, the characteristics stated by the manufacturer in accordance with 6.8.3 or specified in subsequent parts.

Table 8 – Pre-arcing I^2t values at 0,01 s for "gG" and "gM" fuse-links

I_n for "gG" I_{ch} for "gM" A	I^2t_{min} $10^3 \times (A^2s)$	I^2t_{max} $10^3 \times (A^2s)$
16	0,3	1,0
20	0,5	1,8
25	1,0	3,0
32	1,8	5,0
35	2,2	8,0
40	3,0	9,0
50	5,0	16,0
63	9,0	27,0
80	16,0	46,0
100	27,0	86,0
125	46,0	140,0
160	86,0	250,0
200	140,0	400,0
224	200,0	520,0
250	250,0	760,0
315	400,0	1 300,0
400	760,0	2 250,0
500	1 300,0	3 800,0
630	2 250,0	7 500,0
800	3 800,0	13 600,0
1 000	7 840,0	25 000,0
1 250	13 700,0	47 000,0

IECNORM.COM : Click to view the full PDF of IEC 60269-1:2024 RLV

8.8 Overcurrent selectivity of fuse-links

Requirements concerning overcurrent selectivity are dependant upon the fuse system, the rated voltage and the application of the fuse; relevant requirements may be given in subsequent parts.

8.9 Protection against electric shock

8.9.1 General

For the protection of persons against electric shock, three states of the fuse shall be taken into consideration:

– when the complete fuse is properly mounted, installed and wired with fuse-base, fuse-link and, where applicable, gauge-piece, fuse-carrier and enclosure forming part of the fuse (normal service condition);
– during the replacement of the fuse-link;
– when the fuse-link, and where applicable, the fuse-carrier is removed.

The rated impulse withstand voltage is given in Table 9 appropriate to the rated voltage and the overvoltage category of the fuse, which are specified in subsequent parts.

The requirements are specified in subsequent parts. See also 9.8.

Table 9 – Rated impulse withstand voltage

Rated voltage of the fuse up to and including V	Rated impulse withstand voltage U_{imp} (1,2/50 µs) kV			
	Overvoltage category			
	IV	III	II	I
230	4	2,5	1,5	0,8
400	6	4	2,5	1,5
690	8	6	4	2,5
1 000	12	8	6	4

8.9.2 Clearances and creepage distances

The clearances shall be not less than the values given in Table 10 to reduce the risk of disruptive discharge due to overvoltage.

Table 10 – Minimum clearances in air

	Minimum clearances mm
Rated impulse withstand voltage U_{imp} kV	Inhomogeneous field conditions
0,8	0,8
1,5	0,8
2,5	1,5
4,0	3,0
6,0	5,5
8,0	8,0
12,0	14,0
NOTE The values of minimum clearances in air are based on 1,2/50 µs impulse voltage, for barometric pressure of 80 kPa, equivalent to normal atmospheric pressure at 2 000 m above sea-level.	

IECNORM.COM : Click to view the full PDF of IEC 60269-1:2024 RLV

Creepage distances shall also correspond to the material group, as defined in 2.7.1.3 of IEC 60664-1:2002, corresponding with the rated voltage given in Table 11.

Table 11 – Minimum creepage distances

	Creepage distances for equipment subject to long-term stress mm		
Rated voltage of the fuse up to and including V	**Material group** I	**Material group** II	**Material group** III
230	3,2	3,6	4
400	5	5,6	6,3
690	8	9	10
1 000	12,5	14	16

8.9.3 Leakage currents of fuses suitable for isolation

For fuses suitable for isolation and having a rated voltage greater than 50 V, the leakage current shall be measured through each pole with the contacts in the open position.

The value of the leakage current, with a test voltage equal to 1,1 times the rated voltage, shall not exceed

- 0,5 mA per pole for fuses in a new condition;
- 2 mA per pole for fuses having been submitted to tests according to 9.5.

8.9.4 Additional constructional requirements for fuse holders for linked fuse-carriers, suitable for isolation

The fuse-holder shall be marked with the symbol IEC 60617-S00369.

NOTE 1 Symbol IEC 60617. New definition with double opening to be used (2021-04-29).

SC 34B Fuse-disconnector double opening C "Fuse base"

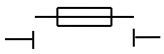

When the fuse is in open position, with the fuse-link remaining inside the fuse-carrier, the isolating distance between the fuse contacts in accordance with the isolating function shall be provided. Indication of this position shall be provided by the position of the fuse-carrier.

This requirement is verified in accordance with 9.2.

When there exists a locking means specified by the manufacturer in order to lock the fuses in the isolated position, locking shall be possible only in this position. Fuses shall be designed so that the fuse-carrier remains attached to the fuse-base giving a correct indication of the open position, and of locking, if any.

NOTE 2 Locking in the close position is permitted for particular applications.

For fuses incorporating electronic circuits connected to the main poles, the disconnection of the electronic circuit(s) is permitted during dielectric tests.

IECNORM.COM : Click to view the full PDF of IEC 60269-1:2024 RLV

8.10 Resistance to heat

All components shall be sufficiently resistant to heat which may occur in normal use.

If not otherwise specified in subsequent parts, this requirement is considered as being met when satisfactory results are obtained in tests according to 9.9 and 9.10.

8.11 Mechanical strength

All components of the fuse shall be sufficiently resistant to mechanical stresses which may occur in normal use.

If not otherwise specified in the subsequent parts, this requirement is considered as being met when satisfactory results are obtained on tests according to 9.3 to 9.5 and 9.11.1.

8.12 Resistance to corrosion

8.12.1 General

All metallic components of the fuse shall be resistant to corrosive influences which may occur in normal use.

8.12.2 Resistance to rusting

Ferrous components shall be so protected that they meet the relevant tests.

If not otherwise specified in subsequent parts, this requirement is considered as being met when satisfactory results are obtained on tests according to 9.11.2.3 and 9.11.2.3.

8.12.3 Resistance to season cracking

Current-carrying parts shall be sufficiently resistant to season cracking. Relevant tests are specified in 9.11.2.1 and 9.11.2.1.

8.13 Resistance to abnormal heat and fire

All components of the fuse shall be sufficiently resistant to abnormal heat and fire. The test is specified in 9.11.2.2.

8.14 Electromagnetic compatibility

Fuses within the scope of this document are not sensitive to normal electromagnetic disturbances, and therefore no immunity tests are required.

Significant electromagnetic disturbance generated by a fuse is limited to the instant of its operation. Provided that the maximum arc voltages during operation in the type tests comply with the requirements of 8.5, the requirements for electromagnetic compatibility are deemed to be satisfied.

9 Tests

9.1 Overview

9.1.1 General

Tests shall be made according to the IEC rules.

IECNORM.COM : Click to view the full PDF of IEC 60269-1:2024 RLV

9.1.2 Kind of tests

The tests specified in this clause are type tests and are performed under the responsibility of the manufacturer.

If, during one of these tests, a failure occurs and the manufacturer can furnish evidence that this failure is not typical of the fuse-type but due to an individual fault of the tested sample, the relevant test shall be repeated. This does not apply to the breaking capacity test.

If acceptance tests are agreed upon between user and manufacturer, the test shall be selected from the type tests.

Type tests are performed in order to verify that a particular type of fuse or a range of fuses forming a homogeneous series (see 9.1.6.3) corresponds to the specified characteristics, and operates satisfactorily under normal conditions of service or under particular specified conditions.

Compliance with the type test is deemed to prove that all fuses of identical construction meet the requirements of this document.

If any part of the fuse is modified in a manner liable to adversely affect the result of a type test already performed, that type test shall be repeated.

9.1.3 Ambient air temperature (T_a)

The ambient air temperature shall be measured by measuring devices protected against draughts and heat radiation, placed at the height of the centre of the fuse and at a distance of approximately 1 m. At the beginning of each test, the fuse shall be approximately at the ambient air temperature.

9.1.4 Condition of the fuse

Tests shall be made on fuses in a clean and dry condition.

9.1.5 Arrangement of the fuse and dimensions

Except for the degree of protection test (see 9.8), the fuse shall be mounted in free air in draught-free surroundings in the normal operation position, for example, vertical, and, unless otherwise specified, on insulating material of sufficient rigidity to withstand the forces encountered without applying external load to the fuse under test.

The fuse-link shall be mounted either as in normal use, or in the fuse-holder for which it is intended, or in a test rig in accordance with the indications given in the relevant subclause in a subsequent part.

Before the tests are started, the specified external dimensions shall be measured and the results compared with the dimensions specified in the relevant data sheets of the manufacturer or specified in subsequent parts.

9.1.6 Testing of fuse-links

9.1.6.1 General

Fuse-links shall be tested with the kind(s) of current and, for AC, frequency for which they are rated, unless otherwise specified in subsequent parts.

IECNORM.COM : Click to view the full PDF of IEC 60269-1:2024 RLV

9.1.6.2 Complete tests

Before the tests are commenced, the internal resistance R of all samples shall be measured at an ambient-air temperature of (20 ± 5) °C with a measuring current of not more than 0,1 I_n. The value R shall be recorded in the test report.

A survey of the complete tests is given in Table 12.

9.1.6.3 Testing of fuse-links of a homogeneous series

Fuse-links of different rated currents are considered to form a homogeneous series provided

– they have enclosures identical in form and construction, and with the exception of fuse-elements, in dimension. This condition is also met when only the fuse-link contacts differ, in which case tests are performed with the fuse-link having the fuse-link contacts most likely to produce the least favourable test results;

– they have the same arc-extinguishing medium and the same completeness of filling;

– their fuse-elements consist of identical materials. They shall have the same length and form;

NOTE For example, they can be formed with identical tools from material of different thickness.

– their cross-section, which may vary along the length of fuse-elements, as well as the number of fuse-elements, shall not exceed the cross-section and the number of fuse-elements, respectively, of those fuse-links having the highest rated current;

– the minimum distances between adjacent fuse-elements and between the fuse-elements and the inner surface of the cartridge is not less than those in the fuse-link having the highest rated current;

– they are suitable to be used with a given fuse-holder, or are intended to be used without a fuse-holder, but in an arrangement identical for all rated currents of the homogeneous series.

– With respect to the temperature-rise test, the product $RI_n^{3/2}$ does not exceed the corresponding value for the fuse-link which has the largest rated current of the homogeneous series. The resistance R shall be measured with the fuse-link as indicated in 9.1.6.2.

– With respect to the breaking-capacity test, the rated breaking capacity is not greater than that of the fuse-link having the largest current within the homogeneous series. Otherwise, the fuse-link of the largest rated current among those having the greater rated breaking capacity shall be subjected to tests no. 1 and no. 2.

For fuse-links of a homogeneous series,

– the fuse-link having the largest rated current shall be tested completely according to Table 12;

– the fuse-link having the smallest rated current shall be tested only according to Table 13;

– the fuse-links between the largest and the smallest rated current shall be tested according to Table 14.

IECNORM.COM : Click to view the full PDF of IEC 60269-1:2024 RLV

Table 12 – Survey of complete tests on fuse-links and number of fuse-links to be tested

Test according to subclause		Number of samples																								
		"g" fuse-links															"a" fuse-links									
		1	1	1	1	1	1	3	3	1	3	1	1	1	1	3	1	1	1	1	3	3	1	4	3	3
9.1.5	Dimensions	X	X	X													X	X	X							
9.1.6.2	Resistance	X	X	X	X	X	X	X	X	X	X	X	X	X	X	X	X	X	X	X	X	X	X	X	X	X
9.3	Temperature rise, power dissipation	X															X									
9.4.3.1 a)	Conventional non-fusing current	X																								
9.4.3.1 b)	Conventional fusing current	X																								
9.4.3.2	Rated current		X																							
9.4.3.3	Time-current characteristics, gates																									
	Gates, "g" fuse-links a) I_{min} (10 s)											X														
	b) I_{max} (5 s)												X													
	c) I_{min} (0,1 s)													X												
	d) I_{max} (0,1 s)														X											
	Gates, "a" fuse-links																							X		
9.4.3.4	Overload										X															X
9.4.3.5	Conventional cable overload protection									X																
9.4.3.6	Indicating device [c)]				X	X	X	X	X									X	X	X	X	X				
	Striker [c)]			X	X	X	X	X	X									X	X	X	X	X	X			
9.5 no. 5	Breaking capacity [a)]				X													X								
9.5 no. 4	Breaking capacity [a)]					X													X							
9.5 no. 3	Breaking capacity [a)]						X													X						
9.5 no. 2	Breaking capacity [b)]							X													X					
9.5 no. 1	Breaking capacity [b)]								X													X				
9.6	Cut-off current characteristic [d)]																									
9.7	I^2t characteristic [d)]																									
9.8	Degree of protection [d)]																									
9.9	Resistance to heat [d)]																									
9.10	Non-deterioration of contacts [d)]																									
9.11.1	Mechanical strength [d)]																									
9.11.2.1	Freedom from season cracking [d) e)]																									
9.11.2.2	Resistance to abnormal heat and fire [d)]															X									X	
9.11.2.3	Resistance to rusting [d)]																									
9.12	Marking	X																X								

a) Valid also for time-current characteristic, if ambient air temperature is between 15 °C and 25 °C (see 9.4.3.3)
For fuse-links tested in test-rigs, tests in accordance with 3a), 4a) and 5a) of 9.4.3.3 may be used.

b) Valid also for cut-off current and I^2t characteristics (see 9.6 and 9.7).

c) For fuse-links with indicating device or striker only.

d) Tests according to 9.6 to 9.11 relating to fuse systems which are mentioned in subsequent parts may be possible. Number of samples to be tested depends on system and material.

e) For fuse-links with current-carrying parts made of rolled copper alloy with less than 83 % copper.

IECNORM.COM : Click to view the full PDF of IEC 60269-1:2024 RLV

Table 13 – Survey of tests on fuse-links of smallest rated current of homogeneous series and number of fuse-links to be tested

Test according to subclause		Number of samples																			
		"g" fuse-links													"a" fuse-links						
		1	1	1	1	1	3	1	1	3	1	1	1	1	1	1	1	3	1	3	4
9.1.5	Dimensions	X	X	X											X	X	X				
9.1.6.2	Resistance	X	X	X	X	X	X	X	X	X	X	X	X	X	X	X	X	X	X	X	X
9.4.3.1 a)	Conventional non-fusing current					X															
9.4.3.1 b)	Conventional fusing current					X															
9.4.3.2	Rated current				X																
9.4.3.3	Time-current characteristics																				
	no. 3a [d]	X													X						
	no. 4a [d]		X													X					
	no. 5a [d]			X													X				
9.4.3.3.2	Gates, "g" fuse-links a) I_{min} (10 s)										X										
	b) I_{max} (5 s)											X									
	c) I_{min} (0,1 s)												X								
	d) I_{max} (0,1 s)													X							
	Gates, "a" fuse-links																				X
9.4.3.4	Overload									X										X	
9.4.3.5	Conventional cable overload protection								X												
9.4.3.6	Indicating device [c]						X											X			
	Striker [c]						X	X										X	X		
9.5 no. 1	Breaking capacity [a]						X											X			
9.6	Cut-off current characteristic [b]																				
9.7	I^2t characteristic [b]																				
9.8	Degree of protection [b]																				
9.9	Resistance to heat [b]																				
9.10	Non-deterioration of contacts [b]																				
9.11.1	Mechanical strength [b]																				
9.11.2.2	Resistance to abnormal heat and fire [b]																				
9.11.2.3	Resistance to rusting [b]																				

[a] Valid also for cut-off current and I^2t characteristics (see 9.6 and 9.7).

[b] Tests according to 9.6 and 9.11 relating to fuse systems which are mentioned in subsequent parts may be possible. Number of samples to be tested depends on system and material.

[c] For fuse-links with indicating device or striker only.

[d] With the exception of "gD", "gG" and "gM", as adequate tests are carried out in connection with verification of the gates (see 8.4.3.3.2).

IECNORM.COM : Click to view the full PDF of IEC 60269-1:2024 RLV

Table 14 – Survey of tests on fuse-links of rated currents between the largest and the smallest rated current of a homogeneous series and number of fuse-links to be tested

Test according to subclause		Number of samples										
		"g" fuse-links								"a" fuse-links		
		1	1	1	1	1	1	1	1	1	2	2
9.1.5	Dimensions	X		X						X		X
9.1.6.1	Resistance	X	X	X	X	X	X	X	X	X	X	X
9.4.3.1 a)	Conventional non-fusing current		X									
9.4.3.2	Rated current	X										
9.4.3.3.1	Time-current characteristics no. 4a [a)]			X						X		
9.4.3.3.2	Gates, "g" fuse-links a) I_{min} (10 s)					X						
	b) I_{max} (5 s)						X					
	c) I_{min} (0,1 s)							X				
	d) I_{max} (0,1 s)								X			
	Gates, "a" fuse-links										X	X
9.4.3.5	Conventional cable overload protection test				X							

[a)] With the exception of "gD" "gG" and "gM", as adequate tests are carried out in connection with verification of the gates (see 9.4.3.3.2).

The tests according to Table 14 may be performed at reduced voltages.

9.1.7 Testing of fuse-holders

The fuse-holders shall be subjected to the tests according to Table 15.

Table 15 – Survey of complete tests on fuse-holders and number of fuse-holders to be tested

Test according to subclause		Number of samples			
		1	**1**	**3**	**3**
9.1.4	Dimensions	X		X	X
9.2	Insulating properties and suitability for isolation	X			
9.3	Temperature rise and acceptable power dissipation		X		
9.5	Peak withstand current		X		
9.8	Degree of protection	X			
9.9	Resistance to heat		X		
9.10	Non-deterioration of contacts				X
9.11.1	Mechanical strength	X	X	X	X
9.11.2.1	Freedom from season cracking [a)]			X	
9.11.2.2	Resistance to abnormal heat and fire	X			
9.11.2.3	Resistance to rusting		X		

[a)] For fuse-holders with current-carrying parts made of rolled copper alloy with less than 83 % copper.

Additional tests relating to special fuse systems which are mentioned in subsequent parts may be necessary. The number of samples depends on the system and the material.

IECNORM.COM : Click to view the full PDF of IEC 60269-1:2024 RLV

9.2 Verification of the insulating properties and of the suitability for isolation

9.2.1 Arrangement of the fuse-holder

In addition to the conditions of 9.1.4, the fuse-holder shall be fitted with fuse-links of the largest dimensions envisaged for the type of fuse-holder concerned.

When the fuse-base itself is depended upon for insulation, metal parts shall be placed at their fixing points in accordance with the conditions of installation of the fuse indicated by the manufacturer, and these parts shall be considered as part of the frame of the apparatus. Unless otherwise specified by the manufacturer, the fuse-base shall be fixed to a metal plate.

If the fuse-link is intended to be replaceable while live, the surfaces of the fuse-link, of the device for replacing it or of the fuse-carrier, if any, which may be touched in the course of a correct replacement, are considered as forming part of the fuse. Thus, these surfaces, if of insulating material, shall be provided with metal coverings connected during the tests to the frame of the apparatus; if of metal, they shall be connected direct to the frame.

If additional insulating means, for example, partition walls, are provided by the manufacturer, these insulating means shall be in position during the tests.

For the verification of the suitability of the fuse for isolation, it shall be in its normal open position, the fuse-link remaining inside the fuse-carrier, or the fuse-link, and, when applicable, the fuse-carrier shall be removed.

9.2.2 Verification of the insulating properties

9.2.2.1 Points of application of the test voltage

The test voltage for the verification of the insulating properties shall be applied

a) between live parts and the frame with the fuse-link and the device for replacing it or the fuse-carrier, if any, in position;

b) between the terminals when the fuse is in normal open position, the fuse-link remaining inside the fuse-carrier, or when the fuse-link and the device for replacing it or the fuse-carrier, if any, are removed;

c) between live parts of different polarity in the case of a multipole fuse-holder with fuse-links of the maximum dimensions intended for that fuse-holder inserted and the device(s) for replacing the fuse-link(s) or the fuse-carrier(s), if any, in position;

d) between live parts which, in the case of a multipole fuse-holder, can reach different potentials after the fuse-link has operated, with the fuse-carrier(s) or the device(s) for replacing the fuse-link(s) alone (without fuse-links) in position.

9.2.2.2 Value of test voltage

The values of test voltage are shown in Table 16 as a function of the rated voltage of the fuse-holder.

IECNORM.COM : Click to view the full PDF of IEC 60269-1:2024 RLV

Table 16 – Test voltage

Rated voltage U_n of the fuse-holder V		AC test voltage (RMS) V	DC test voltage V
AC and DC	Up to and including 60	1 000	1 415
	61 to 300	1 500	2 120
	301 to 690	1 890	2 670
	691 to 800	2 000	2 830
	801 to 1 000	2 200	3 110
DC only	1 001 to 1 500		3 820

9.2.2.3 Test method

9.2.2.3.1 The test voltage shall be applied progressively and maintained at its full value given in Table 16 for 1 min.

The test voltage source should have a short-circuit current of at least 0,1 A at the setting corresponding to the test voltage on open circuit.

9.2.2.3.2 The fuse-holder shall be subjected to humid atmospheric conditions.

The humidity treatment shall be performed in a humidity cabinet containing air with a relative humidity maintained between 91 % and 95 %.

The temperature of the air, at the place where the sample is located, shall be maintained within 2 K of any convenient value T between 20 °C and 30 °C.

Before being placed in the humidity cabinet, the sample shall be brought to a temperature differing from the above-mentioned value T by not more than +2 K.

The sample shall be kept in the cabinet for 48 h.

Immediately after this treatment, and after wiping off any drops of water that result from condensation, the insulation resistance shall be measured between the points prescribed in 9.2.2.1 by applying a DC voltage of approximately 500 V.

9.2.3 Verification of the suitability for isolation

9.2.3.1 General

Clearances and creepage distances shall be verified by dimensional measurement and by voltage test.

9.2.3.2 Points of application of the test voltage

The test voltage for the verification of the suitability for isolation shall be applied between the terminals when the fuse-link and the device for replacing it or the fuse-carrier, if any, are removed, or the equipment is in its normal open position with the fuse-link remaining inside the fuse-carrier.

9.2.3.3 Value of test voltage

The test voltage for the verification of the rated impulse withstand voltage is given in Table 17.

IECNORM.COM : Click to view the full PDF of IEC 60269-1:2024 RLV

Table 17 – Test voltage across the poles for the verification of the suitability for isolation

Rated impulse withstand voltage U_{imp} kV	Test voltages and corresponding altitudes $U_{1,2/50}$ kV				
	Sea level	200 m	500 m	1000 m	2000 m
0,8	1,8	1,7	1,7	1,6	1,5
1,5	2,3	2,3	2,2	2,2	2
2,5	3,5	3,5	3,4	3,2	3
4,0	6,2	6,0	5,8	5,6	5
6,0	9,8	9,6	9,3	9,0	8
8,0	12,3	12,1	11,7	11,1	10
12,0	18,5	18,1	17,5	16,7	15

9.2.3.4 Test method

The 1,2/50 µs impulse voltage according to Table 17 shall be applied five times for each polarity at intervals of 1 s minimum.

9.2.4 Acceptability of test results

9.2.4.1 Throughout the application of the test voltage according to Table 16, there shall be no breakdown of insulation or flashover. Glow discharges unaccompanied by a drop in voltage can be neglected.

There shall be no disruptive discharge during the test with the impulse voltage.

9.2.4.2 The insulation resistance measured according to 9.2.2.3.2 shall be not less than 1 MΩ.

9.3 Verification of temperature rise and power dissipation

9.3.1 Arrangement of the fuse

One fuse shall be used for the test unless otherwise stated by the manufacturer.

The fuse shall be mounted in free air as specified in 9.1.4 in order to make sure that the test results are not influenced by particular conditions of installation.

The test shall be performed at an ambient air temperature of (20 ± 5) °C.

The connections on either side of each single fuse shall be not less than 1 m in length. In cases where it might be necessary or desirable to arrange more than one fuse in a combined test, the fuses may be connected in series. This would result in a total length of about 2 m between two fuse terminals in series. The cable should be as straight as possible.

Unless specified in subsequent parts, the cross-sectional area shall be selected in accordance with Table 18. For rated currents up to 400 A, single-core copper-conductor cables insulated with black polyvinyl chloride (PVC) shall be used as connections. For rated currents of 500 A to 800 A, either single-core copper conductors insulated with black PVC or bare copper bars can be used. For higher rated currents, matt black painted copper bars only are used. Torques for the screws connecting the cables to the terminals are given in subsequent parts.

IECNORM.COM : Click to view the full PDF of IEC 60269-1:2024 RLV

9.3.2 Measurement of the temperature rise

The values of the temperature rise given in Table 6 for the contacts and terminals of the fuse shall be determined by means of measuring devices that appear most suitable, provided that the measuring device cannot appreciably influence the temperature of the fuse part. The method used shall be indicated in the test report.

9.3.3 Measurement of the power dissipation of the fuse-link

The fuse-link shall be mounted in the fuse-holder or test rig as specified in subsequent parts. The test arrangement shall be as specified in 9.3.1.

The power dissipation shall be measured in watts, the points between which the measurement is taken being chosen on the fuse-link so as to give the maximum value. Points for the measurement are given in subsequent parts.

9.3.4 Test method

9.3.4.1 General

The tests (see 9.3.4.2 and 9.3.4.3) shall be continued until it becomes evident that the temperature rise would not exceed the specified limits if the tests were continued until a steady temperature were reached. A steady temperature shall be deemed to have been reached when the variation does not exceed 1 K per hour. The measurement shall be made during the last quarter hour of the test. It is permissible to make the test at reduced voltage.

9.3.4.2 Temperature rise of the fuse-holder

The test for temperature rise shall be made with AC by using a fuse-link which, at the rated current of the fuse-holder, attains a power dissipation equivalent to the rated acceptable power dissipation of the fuse-holder or with a dummy fuse-link where specified in subsequent parts. The current applied shall be the rated current of the fuse-holder.

9.3.4.3 Power dissipation of a fuse-link

The test shall be made with AC at the rated current of the fuse-link.

IECNORM.COM : Click to view the full PDF of IEC 60269-1:2024 RLV

Table 18 – Cross-sectional area of copper conductors for tests corresponding to Subclauses 9.3 and 9.4

Rated current A	Cross-sectional area mm^2 or mm × mm
2	1
4	1
6	1
8	1,5
10	1,5
12	1,5
13	1,5
16	2,5
20	2,5
25	4
32	6
35	6
40	10
50	10
63	16
80	25
100	35
125	50
160	70
200	95
224	95
250	120
315	185
355	185
400	240
425	240
500	2 × 185 or 2 × (40 x 5) [a)]
630	2 × 240 or 2 × (50 × 5) [a)]
800	2 × (60 × 5) [a)]
1 000	2 × (80 × 5) [a)]
1 250	2 × (80 × 5) [a)]
1 600	2 × (100 × 5) [a)]

[a)] Recommended cross-sectional areas for fuses designed to be connected to copper bars. The type and arrangement of the connections used shall be stated in the test report. For matt black painted bars, the distance between the two parallel bars of the same polarity should be approximately 5 mm.

The values given in Table 18, as well as the temperature-rise limits fixed in Table 6, should be considered as a convention which is valid for the temperature-rise test specified in 9.3.4. A fuse used or tested according to conditions which correspond to a given installation may have connections of a type, nature and disposition which are different from these test conditions. In consequence, another temperature-rise limit may result, be required or accepted.

IECNORM.COM : Click to view the full PDF of IEC 60269-1:2024 RLV

9.3.5 Acceptability of test results

The temperature rises shall not exceed the values specified in Table 6.

The power dissipation of the fuse-link shall not exceed its rated power dissipation or the value specified in subsequent parts. The acceptable power dissipation of the fuse-holder shall be not less than the rated power dissipation of the fuse-links intended to be used in that fuse-holder, or the values specified in subsequent parts.

After the test, the fuse shall be in a satisfactory condition. In particular, the insulating parts of the fuse-holders shall withstand the test voltage according to 9.2 after having cooled down to ambient temperature (see Table 16); in addition, they shall not have suffered any deformation that would impair their correct operation.

9.4 Verification of operation

9.4.1 Arrangement of the fuse

The test arrangement is that specified in 9.1.4.

Length and cross-sectional area of conductors connected shall correspond to those specified in 9.3.1 and shall be selected according to the rated current of the fuse-link. See Table 18.

9.4.2 Ambient air temperature

The ambient air temperature during these tests shall be (20 ± 5) °C.

9.4.3 Test method and acceptability of test results

9.4.3.1 Verification of conventional non-fusing and fusing current

It is permissible to make the following tests at a reduced voltage.

a) The fuse-link is subjected to its conventional non-fusing current (I_{nf}) for a time equal to the conventional time specified in Table 3. It shall not operate during this time.

b) The fuse-link, after having cooled down to ambient temperature, is subjected to the conventional fusing current (I_f). It shall operate within the conventional time as specified in Table 3.

9.4.3.2 Verification of rated current of "g" fuse-links

For the verification of the rated current of a fuse-link the following tests are performed, the fuse being mounted as specified in 9.4.1. It is permissible to make these tests at a reduced voltage.

One fuse-link is submitted to a pulse test for 100 h, in which the fuse-link will be cyclically loaded. Each cycle with an on-period of the conventional time and an off-period of 0,1 of the conventional time, the test current being equal to 1,05 of the rated current of the fuse-link. After the test the fuse-link shall not have changed its characteristics. Verification shall be carried out by the test as described in item a) of 9.4.3.1.

9.4.3.3 Verification of time-current characteristics and gates

9.4.3.3.1 Time-current characteristics

The time-current characteristics may be verified on the basis of the results obtained from the oscillographic records taken during the performance of the test according to 9.5.

IECNORM.COM : Click to view the full PDF of IEC 60269-1:2024 RLV

The following periods are determined:

1) from the instant of closing the circuit until the instant when the voltage measurement shows the beginning of the arc;
2) from the instant of closing the circuit until the instant when the circuit is definitely broken.

The values of pre-arcing and operating times so determined, referred to the abscissa corresponding to the value of prospective current, shall be within the time-current zone indicated by the manufacturer, or specified in subsequent parts.

When for the fuse-links of a homogeneous series (see 9.1.6.3) the complete test according to 9.5 is only made on that fuse-link having the largest rated current, it shall be sufficient for the smaller current ratings to verify only the pre-arcing time. In this case, the supplementary tests shall be made at an ambient air temperature of (20 ± 5) °C and at the following values of prospective current only:

– for "g" fuse-links, with the exception of "gD", "gG" and "gM", as adequate tests are carried out in connection with verification of the gates (see 9.4.3.3.2):

  test 3a) between 10 and 20 times;

  test 4a) between 5 and 8 times;

  test 5a) between 2,5 and 4 times the rated current of the fuse-link;

– for "a" fuse-links:

  test 3a) between 5 k_2 and 8 k_2 times;

  test 3b) between 2 k_2 and 3 k_2 times;

  test 5a) between k_2 and 1,5 k_2 times the rated current of the fuse-link (see Figure 2).

These supplementary tests may be performed at a reduced voltage. In this case, where the pre-arcing time exceeds 0,02 s, the value of the current measured during the test shall be considered to be the value of the prospective current.

9.4.3.3.2 Verification of gates

The following tests may be made at a reduced voltage. Additional to the above-mentioned tests, the following shall be verified for "gG" and "gM" fuse-links.

a) A fuse-link is subjected to the current of Table 4, column 2 for 10 s. It shall not operate.
b) A fuse-link is subjected to the current of Table 4, column 3. It shall operate within 5 s.
c) A fuse-link is subjected to the current of Table 4, column 4 for 0,1 s. It shall not operate.
d) A fuse-link is subjected to the current of Table 4, column 5. It shall operate within 0,1 s.

Additional to the tests of 9.4.3.3.1, "aM" fuse-links shall comply the following tests which can be made at a reduced voltage.

e) A fuse-link is subjected to the current of Table 5, column 2, for 60 s. It shall not operate.
f) A fuse-link is subjected to the current of Table 5, column 3. It shall operate within 60 s.
g) A fuse-link is subjected to the current of Table 5, column 5, for 0,2 s. It shall not operate.
h) A fuse-link is subjected to the current of Table 5, column 7. It shall operate within 0,10 s.

Tests f) and g) may be verified with the breaking capacity tests Nos. 4 and 5, respectively.

These tests for "aM" fuses shall be conducted with the conductor cross-section areas defined in Table 19.

IECNORM.COM : Click to view the full PDF of IEC 60269-1:2024 RLV

Table 19 – Cross-section areas of the copper conductors for the test of "aM" fuses

Rated current A	Cross-section area mm^2 or mm × mm
2	1,5
4	1,5
6	1,5
8	2,5
10	2,5
12	2,5
16	4
20	6
25	10
32	16
35	16
40	25
50	25
63	35
80	50
100	70
125	95
160	120
200	185
250	240
315	2 × 150 or 2 × (30 × 5)
400	2 × 185 or 2 × (40 x 5)
500	2 × 240 or 2 × (50 × 5)
630	2 × (60 × 5)
800	2 × (80 × 5)
1 000	2 × (100 × 5)
1 250	2 × (100 × 5)

IECNORM.COM : Click to view the full PDF of IEC 60269-1:2024 RLV

9.4.3.4 Overload

The test arrangement is the same as that for the temperature-rise test (see 9.3.1). Three fuse-links shall be submitted to 50 pulses having the same duration and the same test current.

For "g" fuse-links, the test current shall be 0,8 times the current determined from the manufacturer's minimum pre-arcing time-current characteristics for a pre-arcing time of 5 s. The duration of each pulse shall be 5 s and the time interval between pulses shall be 20 % of the conventional time specified in Table 2.

For "a" fuse-links, the test current shall be equal to $k_1 I_n$ ± 2 %. The pulse duration shall correspond to that indicated on the overload curve for $k_1 I_n$ as stated by the manufacturer. The intervals between pulses shall be 30 times the pulse duration.

This test may be carried out at a reduced voltage.

NOTE With the manufacturer's consent, the interval between pulses may be reduced.

After having been allowed to cool down to ambient air temperature, the fuse-links shall be subjected to a current equal to that used during the overload test. The pre-arcing time, when passing this current, shall be shown to lie within the manufacturer's time-current zone.

9.4.3.5 Conventional cable overload protection test (for "gG" fuse-links only)

In order to verify that fuse-links are capable of protecting cables against overload, one fuse-link is submitted to the following conventional test. The fuse-link is mounted in its appropriate fuse-holder or test rig as specified in 9.4.1, but provided with PVC insulated copper conductors of a cross-sectional area as specified in Table 20. The fuse and the conductor connected to it shall be preheated with the rated current of the fuse-link for a time equal to the conventional time.

The test current is then increased to a value of 1,45 I_z (I_z being specified in Table 20). The fuse-link shall operate in a time less than the conventional time.

NOTE It is not necessary to perform this test if the product 1,45 I_z is greater than the conventional fusing current.

This test may be carried out at a reduced voltage.

Table 20 – Table for test in Subclause 9.4.3.5

I_n of fuse-link A	Nominal cross-sectional area of copper conductors mm²	I_z [a] A
12	1	15
16 [b]	1,5	19,5
20 [b] and 25	2,5	27
32 [b] and 35	4	36
40 [b]	6	46
50 [b] and 63	10	63
80	16	85
100 [b]	25	112
125 [b]	35	138
160	50	168
200	70	213
250 [b]	120	299
315 [b]	185	392
400 [b]	240	461

[a] Current-carrying capacity I_z for two loaded conductors (see Table A52-2 of IEC 60364-5-52:2001).

[b] For this current rating it is not necessary to perform this test as the product 1,45 I_z is greater than the conventional fusing current I_f.

9.4.3.6 Operation of indicating devices and striker, if any

The correct operation of indicating devices is verified in combination with the verification of breaking capacity (see 9.5.5).

IECNORM.COM : Click to view the full PDF of IEC 60269-1:2024 RLV

For verifying the operation of strikers, if any, an additional test sample shall be tested at a current:

– I_4 (see Table 21 and Table 22) in the case of "g" fuse-links;

– 2 $k_1 I_n$ in the case of "a" fuse-links (see Figure 2);

and at a recovery voltage of:

– 20 V for rated voltages not exceeding 500 V;

– 0,04 U_n for rated voltages exceeding 500 V.

The values of the recovery voltage may be exceeded by 10 %.

The striker shall operate during all tests made at a recovery voltage of

– at least 20 V.

If during one of these tests, the indicating device or striker fails, the test shall not be considered as negative on this account, if the manufacturer can furnish evidence that such failure is not typical of the fuse type, but it is due to a fault of the individual tested sample.

9.5 Verification of the breaking capacity

9.5.1 Arrangement of the fuse

The test arrangement is that specified in 9.1.5.

Suitable conductors shall be arranged for a length of approximately 0,2 m on either side of the complete fuse in the plane of the connecting device and in the direction of the connecting line between the terminals of the fuse. At this distance, they shall be rigidly supported. Beyond this point, they shall be bent at right angles towards the back. This arrangement is considered to be met when using test rigs as specified in subsequent parts.

9.5.2 Characteristics of the test circuit

The test circuit is shown by way of example in Figure 5.

The test circuit shall be of the single-pole type, i.e. one fuse shall be tested at a voltage based on its rated voltage.

NOTE The single-phase test is deemed to give sufficient information also for application in three-phase circuits.

The source of energy supplying the test circuit shall be of sufficient power to enable the specified characteristics to be proved.

The source of energy shall be protected by a circuit-breaker or other suitable apparatus D; an adjustable resistor R in series with an adjustable inductor L shall allow the characteristics of the test circuit to be adjusted. The circuit shall be closed by means of a suitable apparatus C.

IECNORM.COM : Click to view the full PDF of IEC 60269-1:2024 RLV

The values to be considered are indicated in Table 21 and Table 22.

– For AC:

  When the rated frequency of the fuse is 50 Hz or 60 Hz or is not indicated (see 5.4), the test shall be made at a supply frequency between 45 Hz and 62 Hz. If other frequencies are indicated, the tests shall be performed at these frequencies with a tolerance of ±20 %.

  The inductor L shall be an air-cored inductor for tests nos. 1 and 2.

  The peak value of the power-frequency recovery voltage within the first full half-cycle after clearing and for the next five successive peaks shall correspond to the peak value relating to the RMS value specified in Table 21.

– For DC:

  Breaking capacity tests shall be made with DC on an inductive circuit with series resistance for the adjustment of the prospective current. The inductance can be made up by series and parallel connection of suitable inductance coils. They may have iron cores, provided they do not saturate during the test.

  The time constant shall lie between the limits indicated in Table 22.

  The mean value of DC recovery voltage during 100 ms after final arc extinction shall be not less than the value specified in Table 22.

9.5.3 Measuring instruments

The current trace shall be recorded by one of the measuring circuits O_1 of an oscillograph connected to the terminals of an appropriate measuring device. Another measuring circuit O_2 of the oscillograph shall be connected by means of resistors or a voltage transformer, as the case may be, to the terminals of the source of energy during the calibration test, and to the terminals of the fuse during the test of the latter.

The arc voltages occurring during tests nos. 1 and 2 shall be measured by means of a measuring circuit (i.e. transducer, transmission and recording device) which has adequate sensitivity and frequency response. An oscillograph may be used provided it meets these requirements.

9.5.4 Calibration of test circuit

The test circuit shall be calibrated with a provisional connection A of a negligible impedance compared with that of the test circuit (see Figure 5) in place of the fuse to be tested.

The resistors R and the inductors L shall be so adjusted as to obtain at the desired instant the desired value of current, and,

– in the case of AC, the desired power factor at a power-frequency recovery voltage $105\,^{+5}_{0}$ % of the rated voltage for a 690 V fuse and $110\,^{+5}_{0}$ % of the rated voltage for all other fuses. The power factor shall be determined by one of the methods specified in Annex A or by other methods giving improved accuracy;

– in the case of DC, the desired time constant at a mean value of recovery voltage $115\,^{+5}_{-9}$ % of the rated voltage of the fuse to be tested.

IECNORM.COM : Click to view the full PDF of IEC 60269-1:2024 RLV

Table 21 – Values for breaking-capacity tests on AC fuses

		Test according to 9.5.5.1				
		No. 1	**No. 2**	**No. 3**	**No. 4**	**No. 5**
Power-frequency recovery voltage		105 $^{+5}_{0}$ % of the rated voltage for the rated voltage of 690 V [a)] 110 $^{+5}_{0}$ % of the rated voltage for other rated voltages [a)]				
Prospective test current	For "g" fuse-links	I_1	I_2	I_3 = 3,2 I_f	I_4 = 2,0 I_f	I_5 = 1,25 I_f
	For "a" fuse-links			I_3 = 2,5 $k_2 I_n$	I_4 = 1,6 $k_2 I_n$	I_5 = $k_2 I_n$
Tolerance on current		$^{+10}_{0}$ % [a)]	Not applicable	±20 %	$^{+20}_{0}$ %	
Power factor		0,2 to 0,3 for prospective current up to and including 20 kA 0,1 to 0,2 for prospective current above 20 kA	0,2 to 0,3 for prospective current up to and including 20 kA 0,1 to 0,2 for prospective current above 20 kA	0,3-0,5 [b)]		
Making angle after voltage zero		Not applicable	0 $^{+20}_{0}$ °	Not specified		
Initiation of arcing after voltage zero [c)]		For one test: 40°-65°; for two more tests: 65°-90°	Not applicable	Not applicable		

a) This tolerance may be exceeded with the manufacturer's consent.

b) Power factors lower than 0,3 may be permitted with the manufacturer's consent.

c) Where difficulty is experienced in meeting the requirement for initiation of arcing between 40° and 65° after voltage zero, a test shall be performed with a making angle after voltage zero of 0 $^{+10}_{0}$ °.

If, on this test, arcing is initiated at an angle of more than 65° after voltage zero, then the test shall be accepted in lieu of that meeting the 40° to 65° requirements for start of arcing. Should, however, arcing be initiated at an angle of less than 40° after voltage zero, then the three tests specified in the table shall be achieved.

I_1: current which is used in the designation of the rated breaking capacity (see 6.7).

I_2: current which shall be chosen in such a manner that the test is made under conditions which approximate those giving maximum arc energy.

NOTE This condition may be deemed to be satisfied if the instantaneous value of the current at the beginning of arcing has reached a value between 0,60 $\sqrt{2}$ and 0,75 $\sqrt{2}$ times the prospective current (RMS value of the AC component).

As guide for practical application, the value of current I_2 may be found between three and four times the current (symmetrical RMS value) which corresponds to a pre-arcing time of one half-cycle.

I_3, I_4, I_5: the tests made with these test currents are deemed to verify that the fuse is able to operate satisfactorily in the range of small overcurrents.

I_f: conventional fusing current (see 9.4.3.1) for the conventional time indicated in Table 2.

k_2: see Figure 2 and Figure 3.

IECNORM.COM : Click to view the full PDF of IEC 60269-1:2024 RLV

Table 22 – Values for breaking-capacity tests on DC fuses

	Test according to 9.5.5.1				
	No. 1	**No. 2**	**No. 3**	**No. 4**	**No. 5**
Mean value of recovery voltage [a]	$115\ ^{+5}_{-9}$ % of the rated voltage [b]				
Prospective test current	I_1	I_2	$I_3 = 3{,}2\ I_f$	$I_4 = 2{,}0\ I_f$	$I_5 = 1{,}25\ I_f$
Tolerance on current	$^{+10}_{0}$ % [b]	Not applicable	±20 %	$^{+20}_{0}$ %	
Time constant [b]	If the prospective current is higher than 20 kA: 15 ms to 20 ms If the prospective current is equal to or less than 20 kA: 0,5 $(I)^{0,3}$ ms with a tolerance of $^{+20}_{0}$% [b] (value I in A).				

[a] This tolerance includes ripple.

[b] With the manufacturer's consent this value may be exceeded.

I_1: current which is used in the designation of the rated breaking capacity (see 5.7).

I_2: current which shall be chosen in such a manner that the test is made under conditions which approximate those giving maximum arc energy.

NOTE This condition may be deemed to be satisfied if the current at the beginning of arcing has reached a value between 0,5 and 0,8 times the prospective current.

I_3, I_4, I_5: the tests made with these test currents are deemed to verify that the fuse is able to operate satisfactorily in the range of small overcurrents.

I_f: conventional fusing current (see 9.4.3.1) for the conventional time indicated in Table 2.

The value of the time constant is deemed to be given by the abscissa OA (see Figure 7a) of the point of the current trace corresponding to 0,632 I.

Where iron core inductors are used, the above method may give misleading results due to residual magnetism of the core. In such cases, the inductor may be energized at the required test current via a series resistor and the inductor short-circuited via the test-circuit to measure the time taken for the current to fall to 0,368 I. The supply circuit shall be disconnected immediately after the inductor is short-circuited.

The test circuit may be calibrated at reduced voltage, provided that the ratio between the voltage and the current in the test circuit is ensured.

The circuit shall be prepared by closing the apparatus D, the time lag of which is so adjusted as to allow an approximately steady value of current to be reached before it opens; apparatus C shall then be closed and the current trace recorded by measuring circuit O_1, and the voltage trace before the closing of apparatus C and after the opening of apparatus D recorded by measuring circuit O_2.

The value of current shall be computed from the oscillogram in Annex A. Annex A is given as an example.

9.5.5 Test method

9.5.5.1 In order to verify that the fuse-link satisfies the conditions of 8.5, tests nos. 1 to 5 as described below shall be made with the values stated in Table 21 for AC and in Table 22 for DC (see 9.5.2), if not otherwise specified in subsequent parts.

IECNORM.COM : Click to view the full PDF of IEC 60269-1:2024 RLV

Tests nos. 1 and 2:

For each of these tests, the required samples shall be tested in succession.

For AC, if during test no. 1 the requirements of test no. 2 are met during one or more tests, then these tests need not be repeated as part of test no. 2.

For DC, if during test no. 1 arcing commences at a current equal to or greater than 0,5 I_1, test no. 2 need not be performed.

For AC, if the prospective current necessary to comply with the requirements of test no. 2 is greater than the rated breaking capacity, tests nos. 1 and 2 shall be replaced by a test made with the current I_1, on six samples at six making angles which differ approximately 30° between each test.

To verify the peak withstand current of a fuse-holder, test no. 1 shall be made on a complete assembly of fuse-base and fuse-link (see 9.1.6) without or with fuse-carrier, where applicable. For these tests, the initiation of arcing shall be between 65° and 90° after voltage-zero.

Tests no. 3 to 5:

For each of the tests, when performed with AC, the closing of the circuit in relation to the passage of the voltage through zero may be at any instant.

If the testing arrangement does not permit the current to be maintained at the full voltage during all of the time required, the fuse may be pre-heated at reduced voltage by applying a current approximately equal to the value of the test current. In this case, switching over to the test circuit according to 9.5.2 shall take place before the arc is initiated, and the switching time t_1 (interval without current) shall not exceed 0,2 s. The time interval between reapplication of the current and beginning of arcing shall be not less than three times t_1.

9.5.5.2 For one of the three tests no. 2 and test no. 4, the recovery voltage shall be maintained at a value of

– 100^{+10}_{0} % for fuse rated 690 V and 100^{+15}_{0} % for all other fuses,

– 100^{+20}_{0} % of the rated voltage for DC,

for at least:

– 30 s after operation of fuse-links not containing organic materials in their body or filler;
– 5 min after operation of the fuse-links in all other cases, switching over to another source of supply being permitted after 15 s if the switching time (interval without voltage) does not exceed 0,1 s.

For all other tests, the recovery voltage shall be maintained at the same value for 15 s after operation of the fuse.

In a lapse of time of at least 6 min and maximum 10 min after the operation (with the manufacturer's consent shorter times are possible, if the fuse-link does not contain organic materials in its body or filler) the resistance between the contacts of the fuse-link shall be measured (see 9.5.8) and noted.

IECNORM.COM : Click to view the full PDF of IEC 60269-1:2024 RLV

9.5.6 Ambient air temperature

If the test results are also to be used for the verification of the time-current characteristics (see 9.4.3.3), the breaking-capacity tests shall be made at ~~an~~ ambient air temperature of (20 ± 5) °C.

If these limits cannot be adhered to, it is permissible to make the breaking-capacity tests at an ambient air temperature between −5 °C and +40 °C. In this case, however, tests nos. 4 and 5 of Table 21 and Table 22 shall be repeated at an ambient-air temperature of (20 ± 5) °C with reduced voltage in order to verify the pre-arcing time-current characteristics.

9.5.7 Interpretation of oscillograms

Figure 6 and Figure 7 give, by way of example, the method of interpreting the oscillograms in the different cases.

The recovery voltage shall be determined from the oscillogram corresponding to the fuse tested, and shall be evaluated as shown in Figure 6b) and Figure 6c) for AC and Figure 7b) and Figure 7c) for DC.

The value of the AC recovery voltage shall be measured between the peak of the second non-influenced half-wave and the straight line drawn between the peaks of the preceding and following half-waves.

The value of the DC recovery voltage shall be measured as the mean value during the period of 100 ms after final arc extinction.

In order to determine the value of prospective current, the current trace obtained during the calibration of the circuit (Figure 6a for AC and Figure 7a for DC) shall be compared with that obtained in the breaking test (Figure 6b and Figure 6c for AC, Figure 7b and Figure 7c for DC).

For AC the value of prospective current is the RMS value of the alternating component of the calibration curve corresponding to the instant of initiation of the arc.

If the time between the instant when the circuit is closed and the instant when the arc is initiated is shorter than one-half cycle, the value of prospective current shall be measured after a time lapse equal to a half-cycle.

For DC, where cut-off does not occur, the value of prospective current shall be measured from the calibration oscillogram at the instant corresponding to the initiation of the arc. Where ripple is present, the RMS curve shall be drawn and the value of this curve corresponding to the instant of initiation of the arc is considered as the prospective current.

Where cut-off occurs, the value of prospective current is the maximum steady value obtained from the calibration oscillograms. Where ripple is present, the RMS curve shall be drawn, and the maximum value of this curve is considered as the prospective current.

9.5.8 Acceptability of test results

The arc voltage occurring during operation of the fuse-link in tests nos. 1 and 2 shall not exceed the values stated in Table 7.

The fuse-link shall operate without external effects or damage to the components of the complete fuse beyond those specified below.

There shall be no permanent arcing, flashover or any ejection of flames which may be dangerous to the surroundings.

IECNORM.COM : Click to view the full PDF of IEC 60269-1:2024 RLV

After operation, the components of the fuse, with the exception of those intended to be replaced after each operation, shall not have suffered damage capable of hindering their further use.

Fuse-links shall not be so damaged that their replacement might be difficult or dangerous for the operator. The fuse-links or their parts may have changed their colour or may show cracks, provided that the fuse-link remains in one piece before its removal from the fuse-carrier or test rig.

The resistance between fuse-link contacts measured after each test (see 8.5.5.2) with a DC voltage of approximately 500 V shall be equal to at least:

– 50 000 Ω when the rated voltage of the fuse-link does not exceed 250 V;
– 100 000 Ω in all other cases.

9.6 Verification of the cut-off current characteristics

9.6.1 Test method

If the manufacturer has stated the cut-off current characteristic, this characteristic shall be verified for the prospective current in connection with test no. 1 (see 9.5), and the corresponding value shall be computed from the oscillograms.

9.6.2 Acceptability of test results

The values measured shall not exceed those indicated by the manufacturer (see 6.8.2).

9.7 Verification of I^2t characteristics and overcurrent selectivity

9.7.1 Test method

The I^2t characteristics indicated by the manufacturer shall be verified from the results of the breaking-capacity test, or can be given by a calculation based on measured values taking into account service conditions (see Annex B).

9.7.2 Acceptability of test results

The operating I^2t values measured shall not exceed the values indicated by the manufacturer or specified in subsequent parts. The pre-arcing I^2t values shall be not less than the minimum pre-arcing values given by the manufacturer, or they shall lie within the limits indicated in Table 8 (see 6.8.3 and Annex B).

The operating I^2t values given by the breaking capacity tests can be used to calculate values for other voltages using the formula in Clause B.3.

9.7.3 Verification of compliance for fuse-links at 0,01 s

Compliance with Table 8 is determined from the pre-arcing I^2t values obtained from the test during I_2 and the pre-arcing I^2t values at 0,1 s as shown in Clause B.1.

The pre-arcing I^2t values for test duty I_2 for the smaller current ratings of a homogeneous series can be calculated from the formula given in Clause B.2.

IECNORM.COM : Click to view the full PDF of IEC 60269-1:2024 RLV

9.7.4 Verification of overcurrent selectivity

The selectivity of the fuse-links is verified by means of the time-current characteristics and the pre-arcing and operating I^2t values.

NOTE In most cases selectivity between "gG" and/or "gM" fuses occurs on prospective currents giving pre-arcing times greater than 0,01 s. Compliance with the values of pre-arcing I^2t given in Table 8 is deemed to ensure a selectivity with ratio 1,6 to 1 between rated currents for these times.

9.8 Verification of the degree of protection of enclosures

If the fuse is fitted in an enclosure, the degree of protection as specified in 6.1.3 shall be verified under the conditions stated in IEC 60529.

9.9 Verification of resistance to heat

If not otherwise specified in subsequent parts, the resistance to heat is judged by the results of all operating tests, in particular with respect to 9.3, 9.4, 9.5 and 9.10.

9.10 Verification of non-deterioration of contacts

9.10.1 General

By means of a test representing severe service conditions, it shall be verified that contacts do not deteriorate when left undisturbed in service for a long period.

9.10.2 Arrangement of the fuse

This test shall be performed on three samples. The test samples are arranged in the test circuit in such a way that they cannot influence each other. The test arrangement and the dummy fuse-links shall be the same as used for verification of temperature rise and power dissipation (see 9.1.5, 9.3.1 and 9.3.4.2).

The samples are provided with standardized dummy fuse-links of the highest current rating intended to be used in the fuse-holder (see subsequent parts).

9.10.3 Test method

A test cycle consists of a load period and a no-load period referred to the conventional time. The test current for the load period and the no-load period are specified in subsequent parts.

The test samples are submitted to a first test of 250 cycles. If the test results are satisfactory after this, the test is stopped. If the test results exceed the specified limits, the test is continued up to 750 cycles.

Before the beginning of the cycling test, the temperature rise and/or the voltage drop of the contacts as specified in subsequent parts shall be measured at rated current when steady-state conditions have been obtained. The test shall be repeated after 250 cycles and, if necessary, after 750 cycles.

If the fuses are so small that reliable measurements on the contacts could not be expected, the measurement at the terminals may be used as the criteria for the test.

9.10.4 Acceptability of test results

After 250 cycles, and if necessary, after 750 cycles, the measured values shall not exceed the limits given in subsequent parts.

IECNORM.COM : Click to view the full PDF of IEC 60269-1:2024 RLV

9.11 Mechanical and miscellaneous tests

9.11.1 Mechanical strength

If not otherwise specified in the subsequent parts, the mechanical characteristics of a fuse and its parts are judged in the context of normal handling and mounting as well as with the results shown after the breaking-capacity test (see 9.6).

9.11.2 Miscellaneous tests

9.11.2.1 Verification of freedom from season cracking

In order to verify that current-carrying parts made of rolled copper alloy with less than 83 % copper content are free from season cracking, the following test is performed.

All grease is removed from three samples by immersing them for 10 min in a suitable solution. Fuse-links are tested individually, while fuse-holders are only tested with the complete fuse.

The samples shall be placed for 4 h in a test cabinet having a temperature of (30 ± 10) °C.

After this, samples are placed for 8 h in a test cabinet, on the bottom of which is an ammonium chloride solution having a pH value of 10 to 11.

For a 1 l ammonium chloride solution the proper pH value may be achieved as follows.

> 107 g ammonium chloride (NH_4Cl p.a.) is mixed with 0,75 l of distilled water and made up to 1 l by adding 30 % sodium hydroxide (prepared from NaOH AR grade and distilled water). The pH value does not vary. The measurements of the pH value shall be made with a glass electrode.

The ratio of the volume of the test cabinet to that of the solution shall be 20:1.

The samples shall show no cracks visible to the unaided eye when any bluish film is removed by means of a dry cloth. Contact caps of fuse-links shall not be removable by hand.

9.11.2.2 Verification of resistance to abnormal heat and fire

9.11.2.2.1 General

If not otherwise specified in subsequent parts, the following applies. Parts of insulating materials, except ceramic, not necessary to retain current-carrying parts in position even though they are in contact with them are tested according to item a) of 9.11.2.2.6.

Enclosures which are a part of a fuse should be tested in the same manner as the fuse. In other cases, the enclosure should be tested in accordance with IEC 60529.

Parts of insulating materials, except ceramic, necessary to retain current-carrying parts and parts of the earthing circuit, if any, in position are tested according to item b) of 9.11.2.2.7.

9.11.2.2.2 General description of the test

The test is applied to ensure that

– a specified loop of resistance wire, which is electrically heated to the temperature specified for the relevant equipment, does not cause ignition of parts of insulating material;
– a part of insulating material, which might be ignited by the electrically heated test wire under defined conditions, has a limited duration of burning, without spreading fire by flames or burning droplets or glowing particles falling from the specimen.

IECNORM.COM : Click to view the full PDF of IEC 60269-1:2024 RLV

The test is made on the specimen. In the case of doubt with regard to the results of the test, the test is repeated on two further specimens.

9.11.2.2.3 Description of test apparatus

The glow-wire consists of a specified loop of a nickel/chromium (80/20) wire; when forming the loop, care needs to be taken to avoid fine cracking at the tip.

A sheathed fine-wire thermocouple, having an overall diameter of 0,5 mm and wires of chromel and alumel with the welding point located inside the sheath, is used for measuring the temperature of the glow-wire.

The glow-wire, with the thermocouple, is shown in Figure 8.

The sheath consists of a metal resistant to a temperature of at least 960 °C. The thermocouple is arranged in a pocket hole, 0,6 mm in diameter, drilled in the tip of the glow-wire, as shown in detail Z of Figure 8 of IEC 60584-1. The thermo-voltages shall comply with IEC 60584-1; the characteristics given in IEC 60584-1 are practically linear. The cold connection shall be kept in melting ice unless a reliable reference temperature is obtained by other means, for example, by a compensation box. The instrument for measuring the electromotive force of the thermocouple should be of class 0,5.

The glow-wire is electrically heated; the current necessary for heating the tip to a temperature of 960 °C is between 120 A and 150 A.

The test apparatus shall be so designed that the glow-wire is kept in a horizontal plane and that it applies a force of 1 N to the specimen, the force being maintained at this value when the glow-wire and the specimen are moved horizontally towards each other over a distance of at least 7 mm.

A piece of white pinewood board, approximately 10 mm thick and covered with a single layer of tissue paper, is positioned at a distance of 200 mm below the place where the glow-wire is applied to the specimen.

Tissue paper is specified in 6.86 of ISO 4046 as thin, soft, relatively tough paper generally intended for packing delicate articles, its substance being between 12 g/m^2 and 30 g/m^2.

An example of the test apparatus is shown in Figure 9.

9.11.2.2.4 Pre-conditioning

The specimen is stored for 24 h in an atmosphere having a temperature between 15 °C and 35 °C and a relative humidity between 35 % and 75 % before starting the test.

9.11.2.2.5 Test procedure

The test apparatus is placed in a substantially draught-free dark room so that flames occurring during the test are visible.

Before starting the test, the thermocouple is calibrated at a temperature of 960 °C, which is carried out by placing a foil of silver, 99,8 % pure, 2 mm square and 0,06 mm thick, on the upper face of the tip of the glow-wire.

The glow-wire is heated and a temperature of 960 °C is reached when the silver foil melts. After some time calibration has to be repeated to compensate for alterations in the thermocouple and in the connections. Care should be taken to ensure that the thermocouple can follow the movement of the tip of the glow-wire caused by thermal elongation.

IECNORM.COM : Click to view the full PDF of IEC 60269-1:2024 RLV

For the test, the specimen is arranged so that the face in contact with the tip of the glow-wire is vertical. The tip of the glow-wire is applied to that part of the surface of the specimen which is likely to be subjected to thermal stresses occurring in normal use.

The tip of the glow-wire is applied at places where the section is thinnest, but not more than 15 mm from the upper edge of the specimen. This applies to cases where the areas subject to thermal stress during normal use of the equipment are not specified in detail.

If possible, the tip of the glow-wire is applied to flat surfaces and not to grooves, knock-outs, narrow recesses or sharp edges.

The glow-wire is electrically heated to the temperature specified which is measured by means of the calibrated thermocouple. Care must be taken to ensure that, before starting the test, this temperature and the heating current are constant for a period of at least 60 s and that heat radiation does not influence the specimen during this period or during the calibration; for example, by providing an adequate distance or by using an appropriate screen.

The tip of the glow-wire is then brought into contact with the specimen and is applied as specified. The heating current is maintained during this period. After this period, the glow-wire is slowly separated from the specimen, avoiding any further heating of the specimen and any movement of air which might affect the result of the test.

The movement of the tip of the glow-wire into the specimen when pressed to it shall be mechanically limited to 7 mm.

After each test, it is necessary to clean the tip of the glow-wire of any residue of insulating material, for example by means of a brush.

9.11.2.2.6 Severities

a) The temperature of the tip of the glow-wire and the duration of its application to the specimen shall be (650 ± 10) °C and (30 ± 1) s.

b) The temperature of the tip of the glow-wire and the duration of its application to the specimen shall be (960 ± 10) °C and (30 ± 1) s.

Other test temperatures are specified in subsequent parts.

The values should be chosen from the severities table of IEC 60695-2-10 to 13.

9.11.2.2.7 Observations and measurements

During application of the glow-wire and during a further period of 30 s, the specimen, the parts surrounding the specimen, and the layer of tissue paper placed below it shall be observed.

The time at which the specimen ignites and the time when flames extinguish during or after the period of application are noted.

The maximum height of any flame is measured and noted, the start of the ignition, which might produce a high flame for a period of approximately 1 s, being disregarded.

The height of flame denotes the vertical distance measured between the upper edge of a glow-wire, when applied to the specimen, and the visible tip of the flame.

The specimen is considered to have withstood the glow-wire test:

– if there is no visible flame and no sustained glowing;
– if flames or glowing of the specimen extinguish within 30 s after removal of the glow-wire.

IECNORM.COM : Click to view the full PDF of IEC 60269-1:2024 RLV

There shall be no burning of the tissue paper or scorching of the pinewood board.

9.11.2.3 Verification of resistance to rusting

All grease is removed from the parts to be tested by immersion in a suitable degreasing agent for 10 min. The parts are then immersed for 10 min in a 10 % solution of ammonium chloride in water, at a temperature of (20 ± 5) °C.

Without drying, but after shaking off any drops, the parts are placed for 10 min in a box containing air saturated with moisture at a temperature of (20 ± 5) °C.

After the parts have been dried for 10 min in a heating cabinet at a temperature of (100 ± 5) °C, their surface shall show no signs of rust.

Traces of rust on sharp edges and any yellowish film removable by rubbing are ignored.

For small springs and for inaccessible parts exposed to abrasion, a layer of grease may provide sufficient protection against rusting. Such parts are subjected to the test only if there is doubt about the effectiveness of the grease film, and the test is then made without previous removal of the grease.

9.12 Test of durability of markings

The marking is rubbed by hand for 5 s with a piece of cloth soaked with water and again for 5 s with a piece of cloth soaked with aliphatic solvent hexane.

It is recommended to use aliphatic solvent hexane with an aromatic content of maximum 0,1 volume percentage, a kauributanol value of approximately 29, an initial boiling point of approximately 65 °C, a dry point of approximately 69 °C and a density of approximately 0,68 g/cm^3.

IECNORM.COM : Click to view the full PDF of IEC 60269-1:2024 RLV

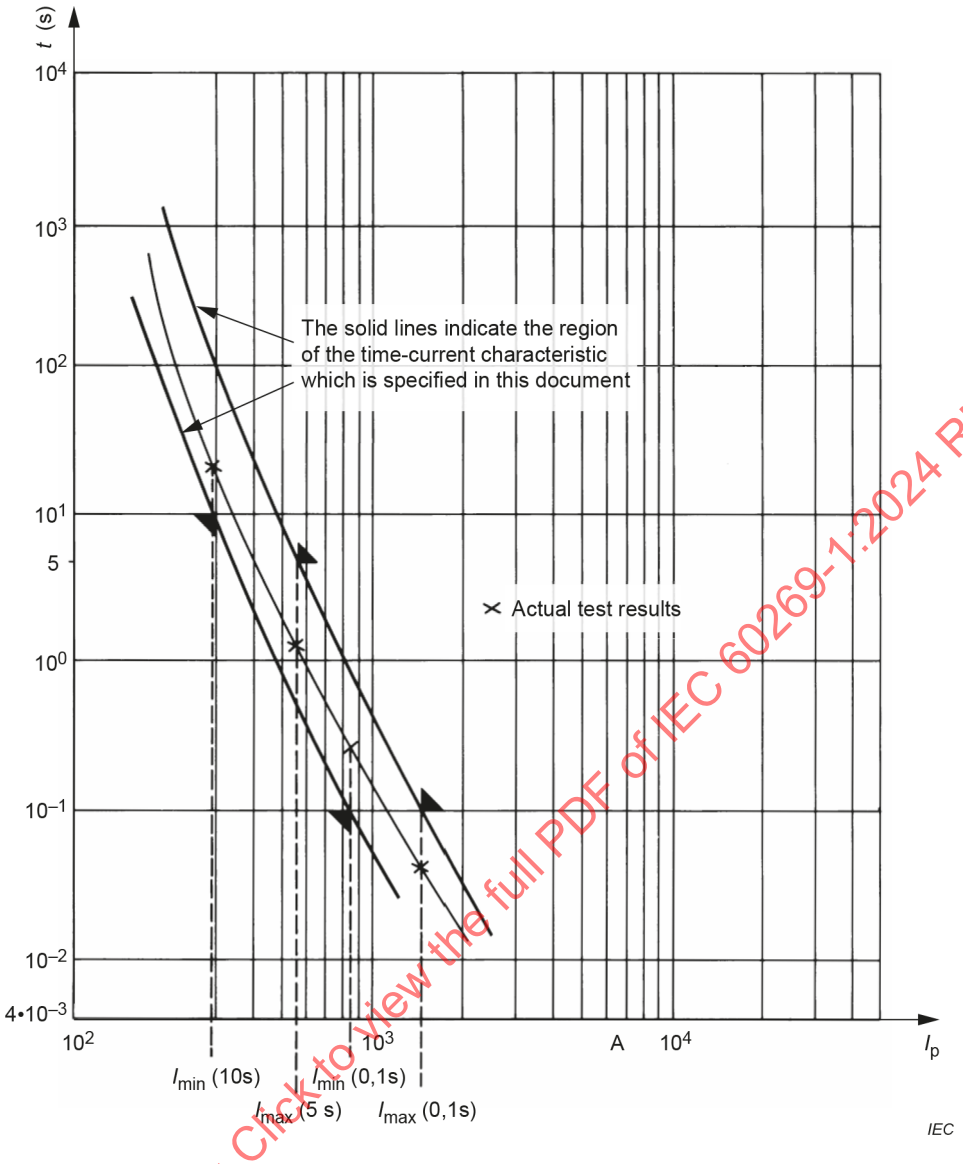

Figure 1 – Diagram illustrating the means of verification of the time-current characteristic, using the results of the tests at the "gate" currents (example)

IECNORM.COM : Click to view the full PDF of IEC 60269-1:2024 RLV

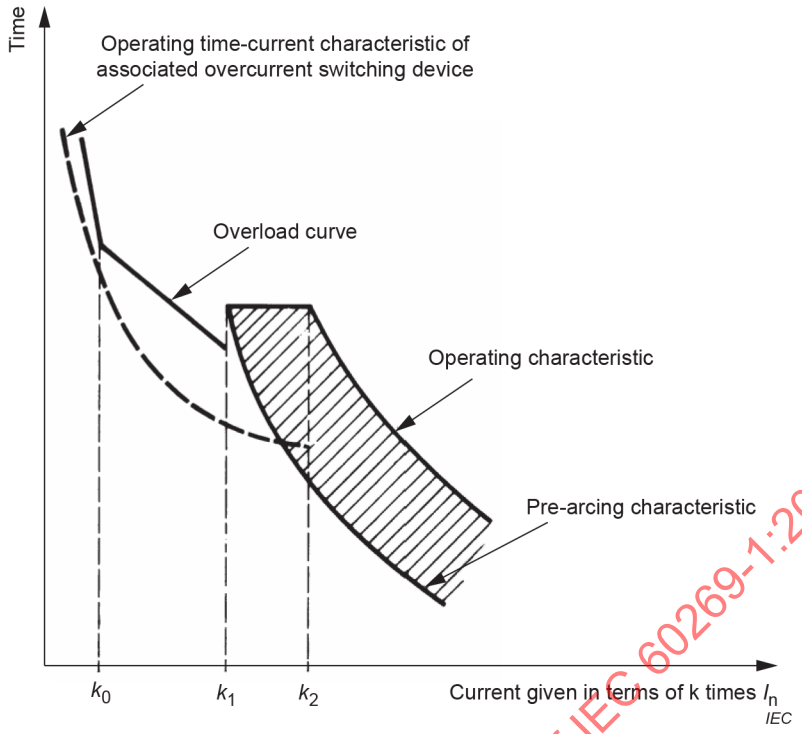

The overload curve between $k_0 \times I_n$ and $k_1 \times I_n$ corresponds to a constant I^2t value.

Figure 2 – Overload curve and time-current characteristic for "a" fuse-links

IECNORM.COM : Click to view the full PDF of IEC 60269-1:2024 RLV

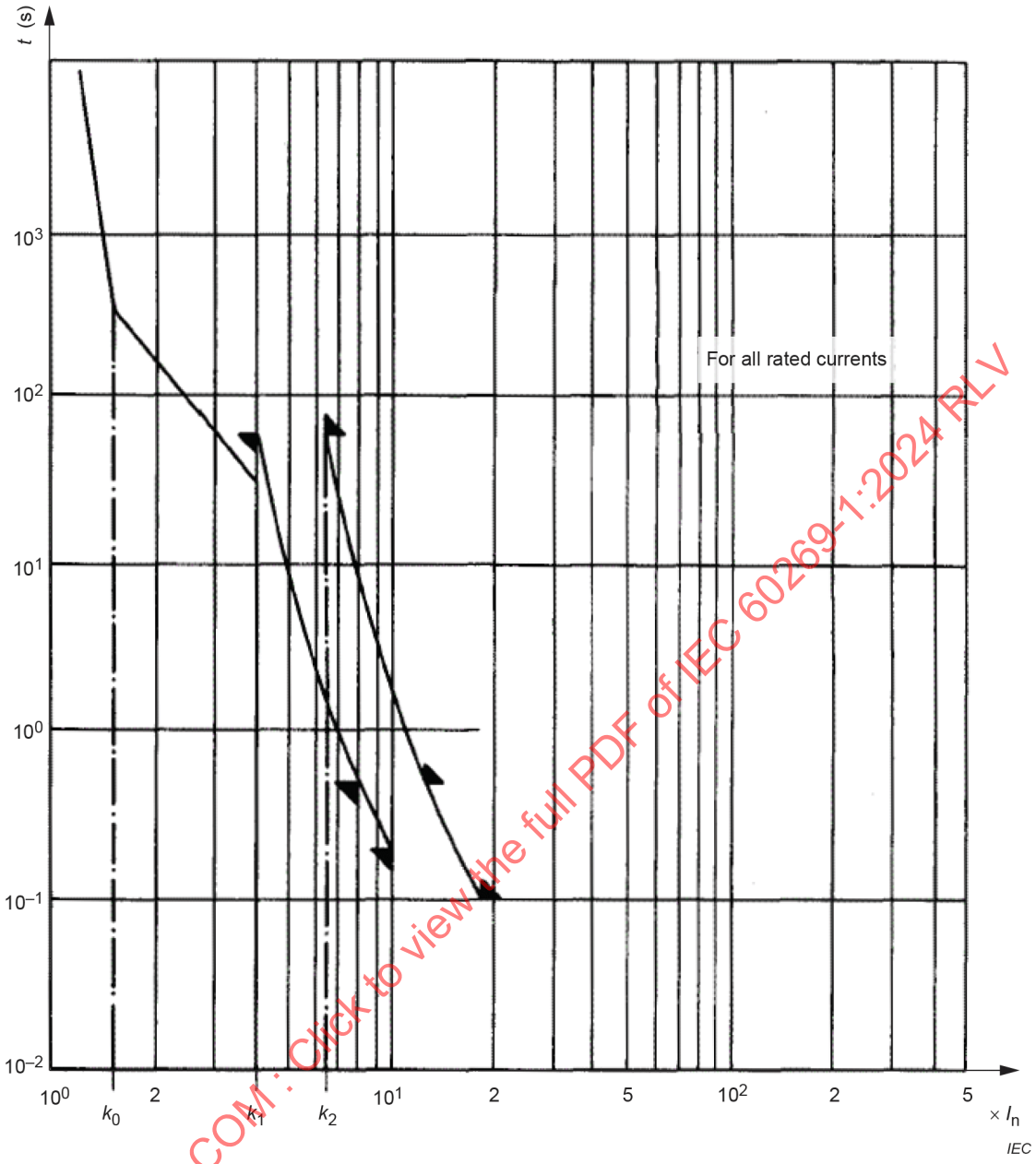

Figure 3 – Time-current zone for aM fuses

IECNORM.COM : Click to view the full PDF of IEC 60269-1:2024 RLV

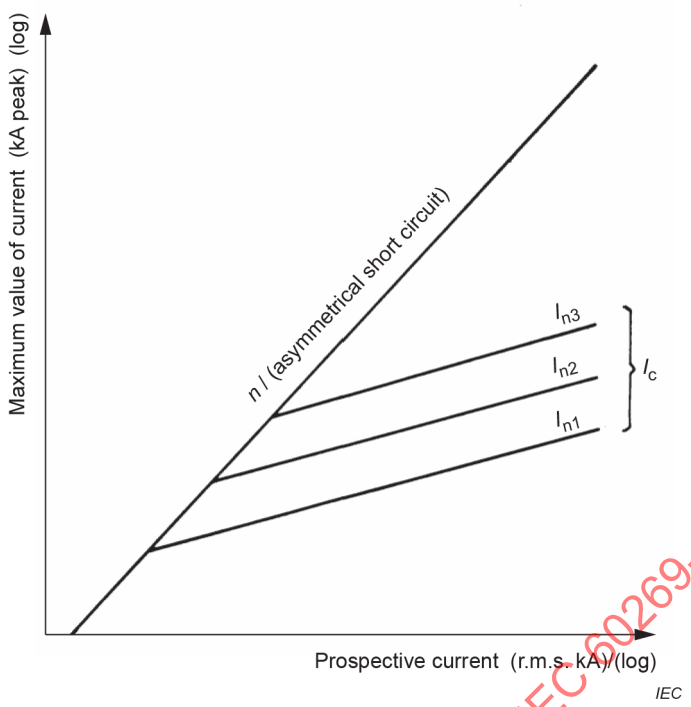

Key

I_{n1}, I_{n2}, I_{n3}	rated currents of fuse-links
I_c	maximum value of cut-off current
n	factor depending on the value of the power factor

Figure 4 – General presentation of the cut-off characteristics for a series of AC fuse-links

IECNORM.COM : Click to view the full PDF of IEC 60269-1:2024 RLV

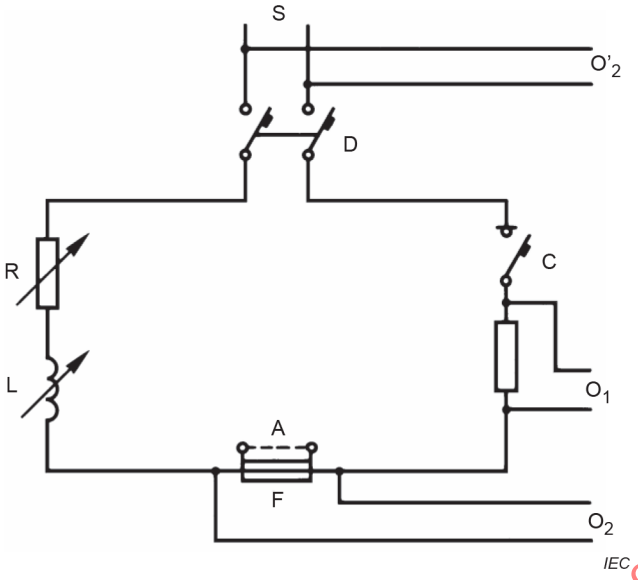

Key

A removable link used for the calibration test

C apparatus for closing the circuit

D circuit-breaker or other apparatus for protection of the source

F fuse on test

L adjustable inductor

O_1 measuring circuit for recording the current

O_2 measuring circuit for recording the voltage during the test

O'_2 measuring circuit for recording the voltage during calibration

R adjustable resistor

S source of power

Figure 5 – Typical diagram of the circuit used for breaking capacity test (see 9.5)

IECNORM.COM : Click to view the full PDF of IEC 60269-1:2024 RLV

Applied voltage for the calibration = B_{00}

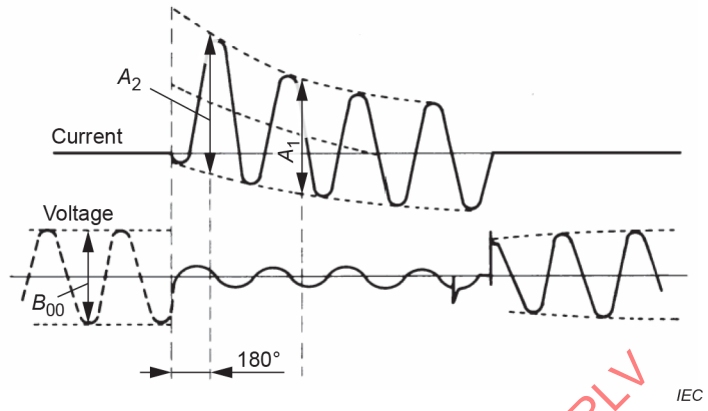

Figure 6a) – Calibration of the circuit

Current $I_{RMS} = \frac{A_1}{2\sqrt{2}} \times \frac{B_0}{B_{00}}$

Recovery voltage $U_{RMS} = \frac{B_1}{2\sqrt{2}}$

Applied test voltage = B_0

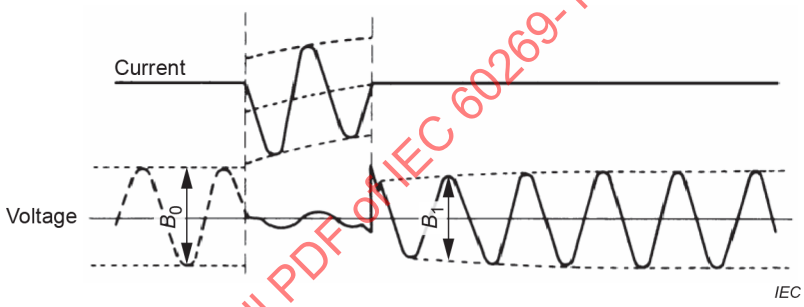

Figure 6b) – Oscillogram corresponding to a breaking operation where the arc is initiated later than 180 electrical degrees after making

Current $I_{RMS} = \frac{A_2}{2\sqrt{2}} \times \frac{B_0}{B_{00}}$

Recovery voltage $U_{RMS} = \frac{B_2}{2\sqrt{2}}$

Applied test voltage = B_0

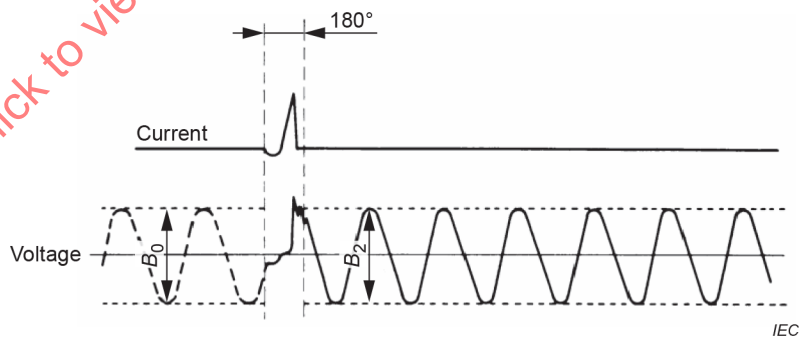

Figure 6c) – Oscillogram corresponding to a breaking operation where the arc is initiated earlier than 180 electrical degrees after making

Figure 6 – Interpretation of oscillograms taken during the AC breaking-capacity tests (see 9.5.7)

IECNORM.COM : Click to view the full PDF of IEC 60269-1:2024 RLV

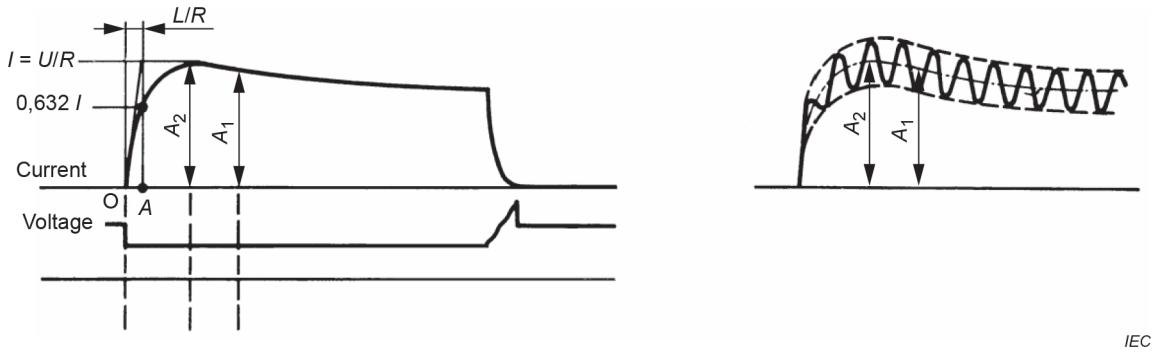

Calibration of the circuit

Where ripples exist, the corresponding values of 0,632 I, A_1 and A_2 of the RMS curve shall be measured.

Figure 7a)

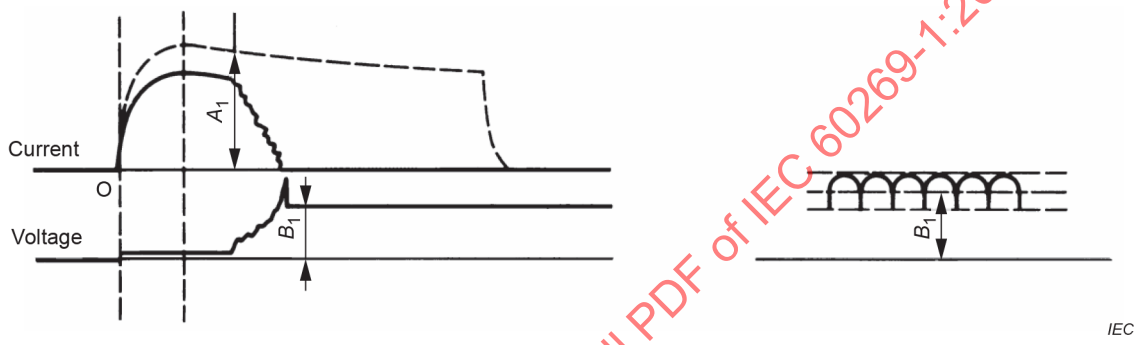

Oscillogram corresponding to a breaking operation where the arc is initiated after the current has passed its maximum value.

Current $I = A_1$ at voltage $U = B_1$.

Where no steady value of voltage exists, the mean value during the period of 100 ms after final arc extinction shall be measured.

Figure 7b)

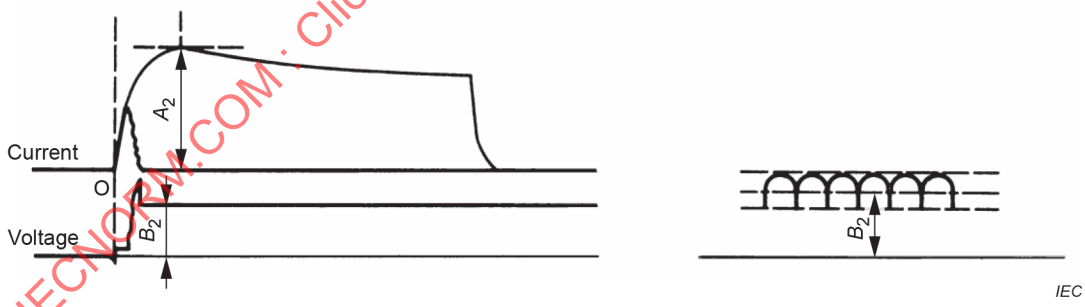

Oscillogram corresponding to a breaking operation where the arc is initiated before the current has reached its maximum value.

Current $I = A_2$ at voltage $U = B_2$.

Where no steady value of voltage exists, the mean value during the period of 100 ms after final arc extinction shall be measured.

Figure 7c)

Figure 7 – Interpretation of oscillograms taken during the DC breaking-capacity tests (see 9.5.7)

IECNORM.COM : Click to view the full PDF of IEC 60269-1:2024 RLV

Dimensions in millimetres

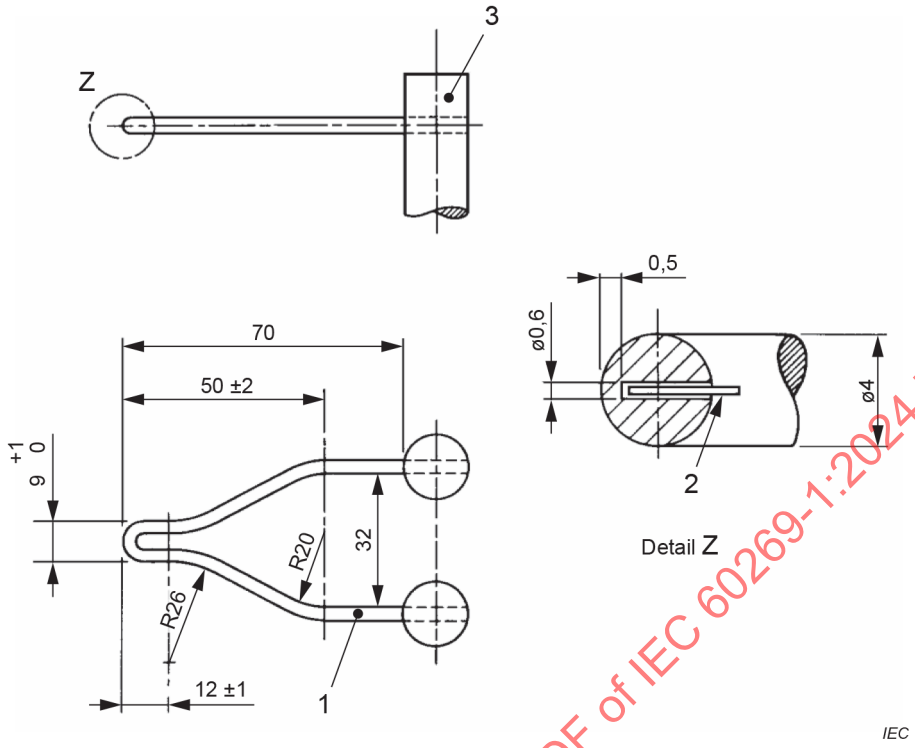

Key

1 glow-wire soldered at 3

2 thermocouple

3 stud

Figure 8 – Glow-wire and position of the thermocouple

IECNORM.COM : Click to view the full PDF of IEC 60269-1:2024 RLV

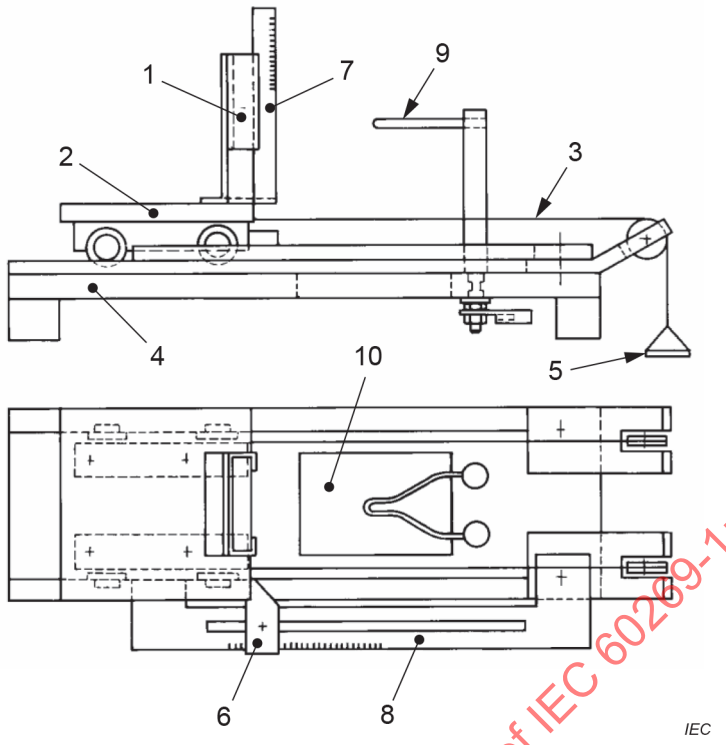

Key

1	position of clamp	6	adjustable stop
2	carriage	7	scale for measurement flame
3	tensioning cord	8	scale for penetration measurement
4	base plate	9	glow-wire (Figure 8)
5	weight	10	break-through in base plate for particles falling from the specimen

Figure 9 – Test apparatus (example)

IECNORM.COM : Click to view the full PDF of IEC 60269-1:2024 RLV

Annex A
(informative)

Measurement of short-circuit power factor

There is no method by which the short-circuit power factor can be determined with precision, but, for the purposes of this document, the determination of the power factor in the test circuit may be made with sufficient accuracy by whichever of the three following methods is the more appropriate.

Method I: Calculation from circuit constants

The power factor may be calculated as the cosine of an angle ϕ where ϕ = arc tan X/R, X and R being respectively the reactance and resistance of the test-circuit during the period in which the short circuit exists.

Owing to the transitory nature of the phenomenon, no accurate method can be given for determining X and R, but, for compliance with the IEC 60269 series, the values may be determined by the following method.

R is measured in the test circuit with direct current; if the circuit includes a transformer, the resistance R_1 of the primary circuit and the resistance R_2 of the secondary circuit are measured separately and the required value R is then given by the formula:

$$R = R_2 + R_1 r^2$$

in which r is the ratio of transformation of the transformer

X is then obtained from the formula

$$\sqrt{R^2 + X^2} = \frac{E}{I}$$

the ratio $\frac{E}{I}$ (circuit-impedance) being obtained from the oscillogram as indicated in Figure A.1.

Method II: Determination from DC component

The angle ϕ may be determined from the curve of the DC component of the asymmetrical current wave between the incidence of short circuit and the beginning of arcing as follows.

1) The formula for the DC component is

$$i_d = I_{do}\, e^{-Rt/L}$$

where

i_d is the value of the DC component at any instant;

I_{do} is the initial value of the DC component;

L/R is the time-constant of the circuit in seconds;

t is the time-interval, in seconds, between i_d and I_{do};

e base of Napierian logarithms.

The time-constant L/R can be ascertained from the above formula as follows:

a) measure the value of I_{do} at the instant of short-circuit and the value of i_d at any other time t, before the beginning of the arcing;

b) determine the value of $e^{-Rt/L}$ by dividing i_d by I_{do};

IECNORM.COM : Click to view the full PDF of IEC 60269-1:2024 RLV

c) from a table of values of e^{-x}, determine the value of $-x$ corresponding to the ratio i_d/I_{do};

d) the value x then represents Rt/L, from which R/L can be determined by dividing x by t, and so L/R is obtained.

2) Determine the angle ϕ from:

$$\phi = \arctan \omega L/R$$

where ω is 2 π times the actual frequency.

This method should not be used when the currents are measured by current transformers.

Method III: Determination with pilot generator

When a pilot generator is used on the same shaft as the test generator, the voltage of the pilot generator on the oscillogram may be compared in phase first with the voltage of the test generator and then with the current of the test generator.

The difference in the phase angles between the pilot generator voltage and the main generator voltage, on the one hand, and the pilot generator voltage and the test generator current, on the other hand, gives the phase angle between the voltage and the current of the test generator, from which the power factor can be determined.

IECNORM.COM : Click to view the full PDF of IEC 60269-1:2024 RLV

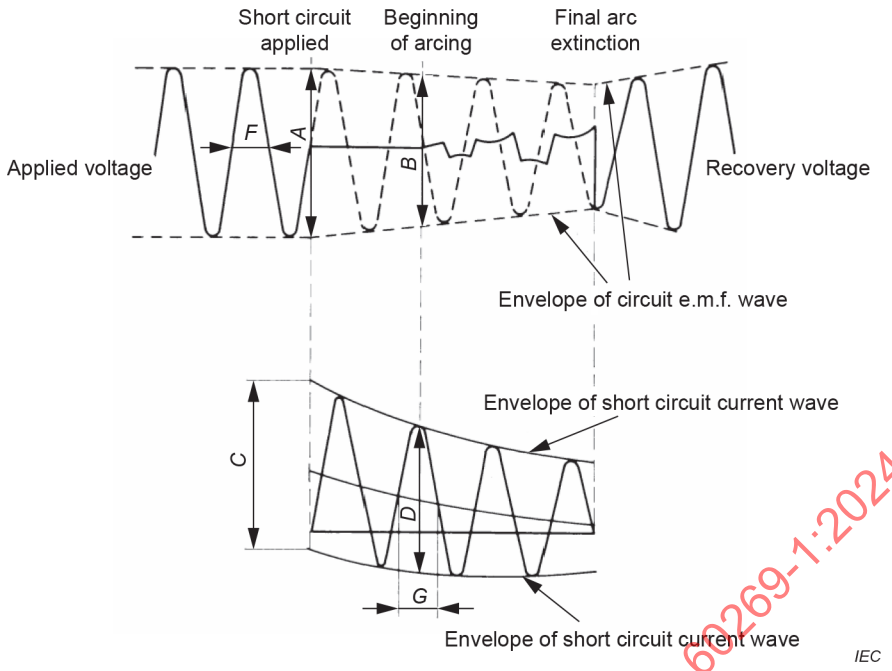

$$\text{Circuitimpedance} = \frac{E}{I} = \frac{B}{D} = \frac{A}{C} \times \frac{F}{G}$$

where

E is the circuit e.m.f. at the beginning of arcing = $\frac{B}{2\sqrt{2}}$, expressed in volts;

I is the breaking current = $\frac{D}{2\sqrt{2}}$, expressed in amperes;

A is twice the peak value of the applied voltage, expressed in volts;

C is twice the peak value of the symmetrical component of the current wave at the beginning of the short-circuit, expressed in amperes;

F is the duration in seconds of one half-cycle of the applied voltage wave;

G is the duration in seconds of one half-cycle of the current wave at the beginning of arcing.

Figure A.1 – Determination of circuit-impedance for calculation of power factor in accordance with method I

IECNORM.COM : Click to view the full PDF of IEC 60269-1:2024 RLV

Annex B
(informative)

Calculation of pre-arcing I^2t values for "gG", "gM" and "gU" fuse-links and calculation of operating I^2t values at reduced voltage

B.1 Evaluation of the pre-arcing I^2t value at 0,01 s

The approximate evaluation of the pre-arcing I^2t values at 0,01 s as a function of the value of pre-arcing I^2t at 0,1 s and measured values at test no. 2 is possible by means of the following formula:

$$I^2t_{(0{,}01\,s)} = F \times \sqrt{I^2t_{(0{,}1\,s)} \times I^2t(\text{test no. 2})}$$

F = 0,7 for "gG", "~~gK~~" and "gM" fuse-links.

The factor F corrects the curvature in the time-current characteristic in this region of time.

B.2 Calculation of the value of pre-arcing I^2t under the conditions of test no. 2

For smaller ratings of a homogeneous series where no direct tests are provided in the specification, the evaluation of the value of pre-arcing I^2t under the conditions of test no. 2 is possible by means of the formula:

$$\left(I^2t\right)_2 = \left(I^2t\right)_1 \times \left(\frac{A_2}{A_1}\right)^2$$

where

$\left(I^2t\right)_2$ is the pre-arcing I^2t under the conditions of test no. 2 for the smaller rating;

$\left(I^2t\right)_1$ is the pre-arcing I^2t under the conditions of test no. 2 for the largest rating measured in the breaking-capacity tests;

A_2 is the minimum cross-sectional area of the element of smaller rating;

A_1 is the minimum cross-sectional area of the element of the largest rating;

The calculated value can be used for the evaluation of the I^2t value at 0, 01 s (see Clause B.1).

B.3 Calculation of the value of operating I^2t at reduced voltage

The operating I^2t values can be estimated at lower voltages than those measured during tests 1 and 2 of Table 21 using the following formula.

$$\textit{Operating } I^2t \textit{ at reduced voltage } V_r = \left\{\frac{\textit{Operating } I^2t \textit{ at test voltage } V_t}{\textit{prearcing } I^2t}\right\}^{V_r/V_t} \times \textit{prearcing } I^2t$$

IECNORM.COM : Click to view the full PDF of IEC 60269-1:2024 RLV

Annex C
(informative)

Calculation of cut-off current-time characteristic

C.1 Overview

Subclause 8.6 of this document prescribes the cut-off characteristic as a function of the prospective current.

The following method constitutes a means by which the cut-off current characteristic may be calculated as a function of the actual pre-arcing time.

The result will be different for every fuse-link, and thus, for full interchangeability, calculations should be based upon the maximum I^2t values permitted in this document. It should also be noted that the following method gives the peak current during the pre-arcing period, whereas for many fuses (especially the types for protection of semiconductors), the current continues to rise during the arcing period, and hence the following method will give a somewhat low estimate, dependent upon circuit conditions.

However, it is included as a good approximation which will enable a user to calculate these curves when necessary (for example, for studies of contact welding).

C.2 Preliminary note

The cut-off current characteristic as a function of prospective current is defined in 3.3.7; the characteristic is the subject of 6.8.2 and of Figure 4; the tests are described in 9.6.

The supply of this characteristic is not mandatory.

Moreover, the information that it gives is generally imprecise, especially in the zone at the beginning of the limitation (pre-arcing time of about 5 ms for symmetrical operation or up to 10 ms for asymmetrical operation).

Users who have to protect components (for example, contactors) which withstand with difficulty currents of short duration and large amplitude (for example, those which the fuses let through before clearance of the short circuit) need to know with accuracy the maximum instantaneous value reached by the current during the breaking operation in order to make the most economical "fuse-component" association.

A characteristic which accurately gives the cut-off current as a function of the actual pre-arcing times provides more useful information for this purpose.

C.3 Definition

Cut-off current characteristic as a function of actual pre-arcing time: a curve giving cut-off currents as a function of actual pre-arcing time for a symmetrical operation.

C.4 Characteristic

If the cut-off current characteristic is indicated as a function of actual pre-arcing time, it shall be evaluated for symmetrical making current and shall be given according to the example shown in Figure C.1 in a double logarithmic presentation with current as abscissa, and time as ordinate.

IECNORM.COM : Click to view the full PDF of IEC 60269-1:2024 RLV

C.5 Test condition

The cut-off current corresponding to a given pre-arcing time depends also on the degree of asymmetry of the short-circuit, and since there are as many characteristics as making conditions an infinite number of tests would be required.

For a given fuse-link, in a given region of operating time, and for each value of cut-off current, the value I^2t is approximately independent of the degree of asymmetry of the short-circuit current.

This property makes the following procedure possible.

1) Measurement of the cut-off current characteristic for symmetrical operation as a function of the actual pre-arcing time for a symmetrical operation.
2) Calculation of the cut-off current characteristic corresponding to any degree of asymmetry.

C.6 Calculation from the measured values

The experimental characteristic gives cut-off current as a function of pre-arcing time.

The short circuit being symmetrical, it is easy to calculate from the above values the prospective short-circuit current of the Joule integral

of

ω pulsation;

I_p prospective short-circuit current;

I_{ps}: with symmetrical conditions;

I_{pa}: with asymmetrical conditions;

I_c cut-off current;

ϕ phase of the current with respect to the voltage;

ψ making angle, with respect to the natural zero of the voltage;

R, L: resistance and inductance symmetrical conditions;

t_s: pre-arcing time with symmetrical conditions;

t_a: pre-arcing time with asymmetrical conditions.

With symmetrical conditions:

(1) $$I_c = I_{ps}\sqrt{2}\,\sin\omega\ t_s$$

(2) $$\int I_c^2 \mathrm{d}t = 2\,I_{ps}^2 \int_0^{t_s} \sin^2 \omega t\ \mathrm{d}t$$

by definition: $\psi = 0$

The calculation is independent of the values of R, L, ϕ.

IECNORM.COM : Click to view the full PDF of IEC 60269-1:2024 RLV

With asymmetrical conditions:

(3) $$I_c = I_{pa}\sqrt{2}\left[\sin(\omega t_a + \psi - \varphi)\right] - e^{-\frac{Rt_a}{L}}\sin(\psi - \varphi)$$

(4) $$\int I^2 dt = 2I_{pa}^2\int_0^{t_a}\left[\sin(\omega t + \psi - \varphi) - e^{-\frac{R_t}{L}}\sin(\psi - \varphi)\right]^2 dt$$

Assuming that the cut-off current and the Joule integral are the same for both conditions:

$$I_{ps}\sqrt{2}\ \sin\omega t_s \approx I_{pa}\sqrt{2}\left[\sin(\omega t_a + \psi - \varphi) - e^{-\frac{Rt_a}{L}}\sin(\psi - \varphi)\right]$$

$$2I_{ps}^2\int_0^{t_a}\sin^2\omega t\ dt \approx 2I_{pa}^2\int_0^{t_a}\left[\sin(\omega t + \psi - \varphi) - e^{-\frac{R_t}{L}}\sin(\psi - \varphi)\right]^2 dt$$

it is possible to calculate any two values if the seven others are known.

In particular, from the value of cut-off current and Joule integral, obtained by experience and by calculation, it is possible to calculate the pre-arcing time and the prospective short-circuit current corresponding to imposed asymmetrical conditions.

This assumption is approximately true for pre-arcing times of the order of 1 ms to 5 ms.

For pre-arcing times inferior to 1 ms, the characteristic giving cut-off current as a function of prospective short-circuit current gives precise information.

IECNORM.COM : Click to view the full PDF of IEC 60269-1:2024 RLV

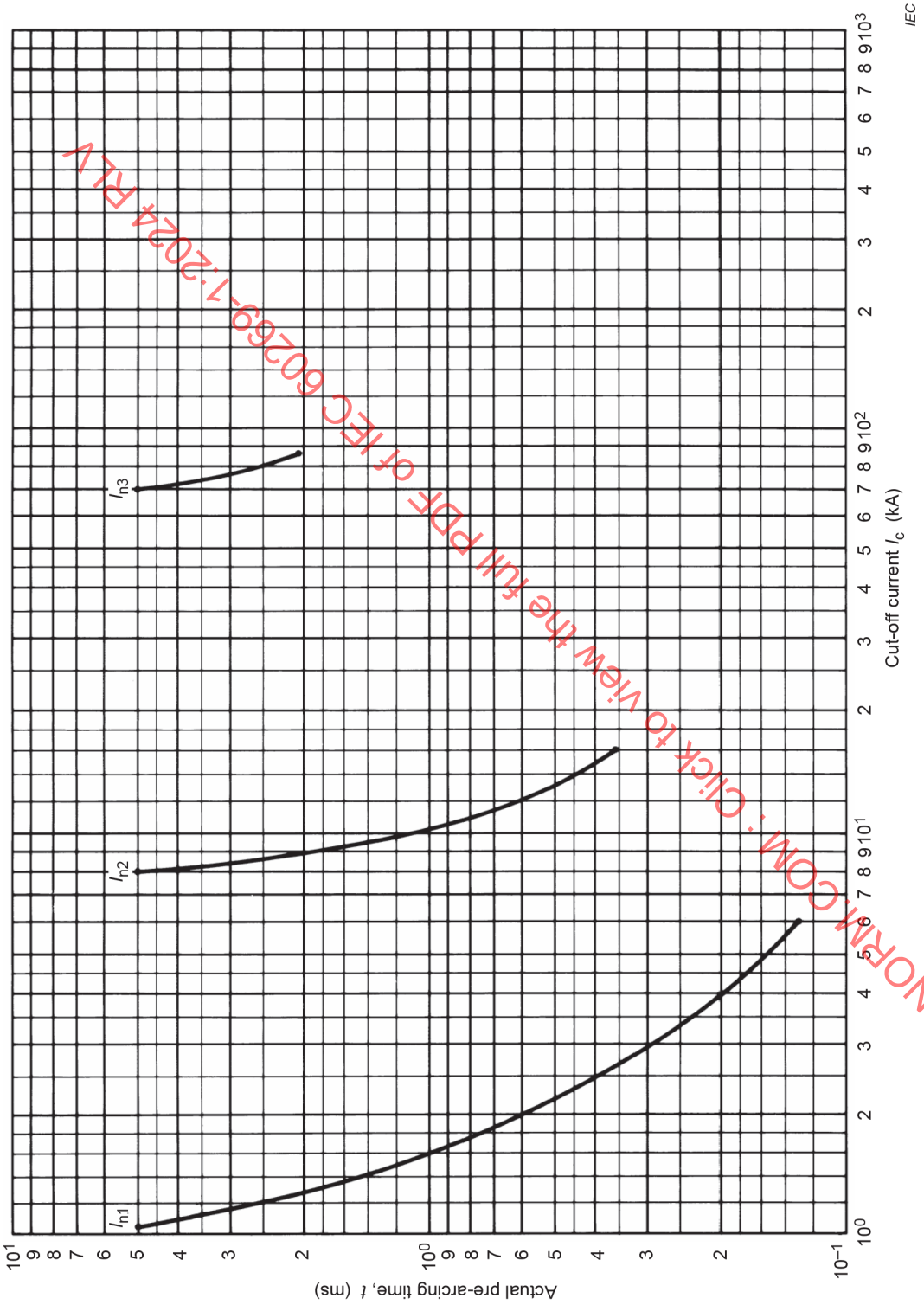

Figure C.1 – Cut-off current characteristic as a function of actual pre-arcing time

IECNORM.COM : Click to view the full PDF of IEC 60269-1:2024 RLV

Annex D
(informative)

Effect of change of ambient temperature and surroundings on the performance of fuse-links

D.1 Effect of increase of ambient temperature

D.1.1 On current rating

For fuse-links that operate at full load for long periods in an average ambient temperature above the value given in 4.1, a reduction of the current rating may be required. The de-rating factor should be as agreed by the manufacturer and the user after taking into account all the circumstances.

D.1.2 On temperature rise

An increase in average ambient temperature causes a relatively small increase in temperature rise.

D.1.3 On conventional fusing and non-fusing current (I_f and I_{nf})

An increase in average ambient temperature causes a decrease, usually small, in the fusing and non-fusing current (I_f and I_{nf}).

D.1.4 For motor starting conditions

It is not necessary to de-rate fuse-links for increases in average ambient temperature of the fuse-link caused by the starting of a motor.

D.2 Effect of decrease of ambient air temperature

A decrease in ambient air temperature below the value given in 4.1 may permit an increase in current rating but it may also cause an increase in the conventional fusing current, conventional non-fusing current and pre-arcing times for smaller over-currents. The magnitude of the relevant increases will be dependent upon the actual temperature and on the design of the fuse-link. In this case the manufacturer should always be consulted.

D.3 Effect of installation conditions

Different installation conditions, such as:

a) enclosure in a box or mounting in the open;

b) the nature of the mounting surface;

c) the number of fuses mounted in a box;

d) the cross-section and insulation of connections;

can affect the operating conditions and should be taken into account.

IECNORM.COM : Click to view the full PDF of IEC 60269-1:2024 RLV

Annex E
(normative)

Particular requirements for fuse-bases with screwless-type terminals for external copper conductors

E.1 General

This annex applies to fuse-bases that fall within the scope of Clause 1, feature screwless-type terminals supporting a maximum current of 63 A, and are primarily intended for the purpose of connecting unprepared copper conductors (see E.3.6) with a cross-section of up to 16 mm^2. For the purpose of this annex, screwless-type terminals shall be referred to as terminals and copper conductors as conductors.

E.3 Terms and definitions

In addition to Clause 3, the following terms and definitions apply:

E.3.1
clamping unit
part(s) of the terminal necessary for mechanical clamping and electrical connection of the conductors including the part(s) which are necessary to ensure correct contact pressure

E.3.2
screwless-type terminal
terminal for the connecting and subsequent disconnection of one conductor per clamping unit obtained directly or indirectly by means of springs, wedges or the like

Note 1 to entry: Examples are given in Figure E.2.

E.3.3
universal terminal
terminal for the connection and disconnection of all types of conductors (rigid and flexible)

E.3.4
non-universal terminal
terminal for the connection and disconnection of a certain kind of conductor only (e.g. rigid-solid conductors only or rigid-(solid and stranded) conductors only)

E.3.5
push-wire terminal
non-universal terminal in which the connection is made by pushing-in rigid (solid or stranded) conductors

E.3.6
unprepared conductor
conductor which has been cut and the insulation of which has been removed over a certain length for insertion into a terminal

Note 1 to entry: A conductor the shape of which is arranged for introduction into a terminal or of which the strands may be twisted to consolidate the end, is considered to be an unprepared conductor.

Note 2 to entry: The term "unprepared conductor" means conductor not prepared by soldering of the wire, use of cable lugs, formation of eyelets, etc., but includes its reshaping before introduction into the terminal or, in the case of flexible conductor, by twisting it to consolidate the end.

IECNORM.COM : Click to view the full PDF of IEC 60269-1:2024 RLV

E.7 Marking

In addition to Clause 7, the following requirements apply:

- universal terminals:
  - no marking.
- non-universal terminals:
  - terminals declared for rigid-solid conductors shall be marked by the letters "s" or "sol";
  - terminals declared for rigid (solid and stranded) conductors shall be marked by the letter "r";
  - terminals declared for flexible conductors shall be marked by the letter "f".

The markings should appear on the fuse-base or on the smallest package or in the technical information.

An appropriate marking indicating the length of insulation to be removed before insertion of the conductor into the terminal shall be shown on the fuse-base . The manufacturer shall also provide information, in his literature, on the maximum number of conductors which may be clamped.

E.8 Standard conditions for construction

Clause 8 applies, with the following modifications.

E.8.1 Fixed connections including terminals

Terminals shall resist the mechanical loads that occur when the equipment is used in accordance with its intended purpose. The connection or disconnection of conductors shall be made

– by the use of a general purpose tool or by a convenient device integral with the terminal to open it and to assist the insertion or the withdrawal of the conductors (e.g. for universal terminals)

or for rigid conductors

– by simple insertion. For disconnection of the conductors an operation other than a pull only on the conductor shall be necessary.

Universal terminals shall accept rigid (solid or stranded) and flexible unprepared conductors.

Non-universal terminals shall accept the types of conductors declared by the manufacturer.

Compliance is checked by inspection and by the tests of E.9.1 and E.9.2.

E.8.2 Dimensions of connectable conductors

The dimensions of connectable conductors are given in Table E.1.

The ability to connect these conductors shall be checked by inspection and by the tests of E.9.1 and E.9.2.

IECNORM.COM : Click to view the full PDF of IEC 60269-1:2024 RLV

Table E.1 – Connectable conductors

Connectable conductors and their theoretical diameter				
Metric				
Rigid			Flexible	
	Solid	Stranded		
mm^2	∅ mm	∅ mm	mm^2	∅ mm
1,5	1,5	1,7	1,5	1,8
2,5	1,9	2,2	2,5	2,3
4,0	2,4	2,7	4,0	2,9
			6,0	3,9
			10	5,1
			16	6,3
NOTE Diameters of the largest rigid and flexible conductors are based on Table 1 of IEC 60228:2023.				

E.8.3 Connectable cross-sectional areas

The nominal cross-sections to be clamped are defined in Table E.2.

Table E.2 – Cross-sections of copper conductors connectable to terminals

Rated current A	Nominal cross-sections to be clamped mm^2
Up to and including 16	1,5, up to and including 4
Above 16, up to and including 35	4, up to and including 10
Above 35, up to and including 63	6, up to and including 16

Compliance is checked by inspection and by the tests of E.9.1 and E.9.2.

E.8.4 Insertion and disconnecting of conductors

The insertion and disconnecting of conductors shall be made in accordance with the manufacturer's instructions.

Compliance is checked by inspection.

E.8.5 Design and construction of terminals

Terminals shall be designed and constructed so that

– each conductor is clamped individually;
– during operation of connection or disconnection the conductors can be connected or disconnected either at the same time or separately;
– inadequate insertion of the conductor is avoided.

It shall be possible to clamp securely any number of conductors up to the maximum provided for.

Compliance is checked by inspection and by the tests of E.9.1 and E.9.2.

IECNORM.COM : Click to view the full PDF of IEC 60269-1:2024 RLV

E.8.6 Resistance to ageing

The terminals shall be resistant to ageing.

Compliance is checked by inspection and by the tests of E.9.3.

E.9 Tests

E.9.1 Test of reliability of terminals

E.9.1.1 Reliability of screwless system

The test is carried out on three terminals of poles of new samples, with copper conductors of the cross sectional area according to Table E.2. The types of conductors shall be in accordance with E.8.1.

The connection and subsequent disconnection shall be made five times with the smallest diameter conductor and successively five times with the largest diameter conductor.

New conductors shall be used each time, except for the fifth time, when the conductor used for the fourth insertion is clamped at the same place. Before insertion into the terminal, wires of stranded rigid conductors shall be re-shaped and wires of flexible conductors shall be twisted to consolidate the ends.

For each insertion, the conductors are either pushed as far as possible into the terminal or shall be inserted so that adequate connection is obvious.

After each insertion, the conductor is rotated by 90° around its axis at the level of the clamped section and subsequently disconnected.

After these tests, the terminal shall not be damaged in such a way as to impair its further use.

E.9.1.2 Test of reliability of connection

Three terminals of poles of new samples are fitted with new copper conductors of the type and cross-sectional area according to Table E.2.

The types of conductors shall be in accordance with E.8.1.

Before insertion into the terminal, wires of stranded rigid conductors and flexible conductors shall be reshaped and wires of flexible conductors shall be twisted to consolidate the ends.

It shall be possible to fit the conductor into the terminal without undue force in the case of universal terminals and with the force necessary by hand in the case of push-wire terminals.

The conductor is either pushed as far as possible into the terminal or shall be inserted so that adequate connection is obvious.

After the test, no wire of the conductor shall have escaped outside the terminal.

E.9.2 Tests of reliability of terminals for external conductors: mechanical strength

For the pull-out test three terminals of poles of new samples are fitted with new conductors of the type and of the minimum and maximum cross-sectional area according to Table E.2.

Before insertion into the terminal, wires of stranded rigid conductors and flexible conductors shall be reshaped and wires of flexible conductors shall be twisted to consolidate the ends.

IECNORM.COM : Click to view the full PDF of IEC 60269-1:2024 RLV

Each conductor is then subjected to pull force of the value shown in Table E.3. The pull is applied without jerks for 1 min in the direction of the axis of the conductor.

Table E.3 – Pull forces

Cross-sectional area mm^2	Pull force N
1,5	40
2,5	50
4,0	60
6,0	80
10	90
16	100

During the test the conductor shall not slip out of the terminal.

E.9.3 Cycling test

The test is made with new copper conductors having a cross section according to Table 18.

The test is carried out on new samples (a sample is one pole), the required number of which is defined below, according to the type of terminals:

– universal terminals for rigid (solid and stranded) and flexible conductors: 3 samples each (9 samples in total);
– non-universal terminals for solid conductors only: 3 samples;
– universal terminals for rigid (solid and stranded) conductors: 3 samples each (6 samples).

NOTE In the case of rigid conductors, solid conductors should be used (if solid conductors are not available in a given country, stranded conductors may be used).

– non-universal terminals for flexible conductors only: 3 samples.

A conductor having the cross section defined in Table 18 is connected in series as in normal use to each of the three samples as defined in Figure E.1.

The sample is provided with a hole (or equivalent) in order to measure the voltage drop on the terminal.

The whole test arrangement, including the conductors, is placed in a heating cabinet which is initially kept at a temperature of (20 ± 2) °C.

To avoid any movement of the test arrangement until all the following voltage drop tests have been completed it is recommended that the poles are fixed on a common support.

Except during the cooling period test, a test current corresponding to the rated current of the fuse-base is applied to the circuit.

The samples shall be then subjected to 192 temperature cycles, each cycle having a duration of approximately 1 h, as follows:

The air temperature in the cabinet is raised to 40 °C in approximately 20 min. It is maintained to within ± 5 °C of this value for approximately 10 min.

IECNORM.COM : Click to view the full PDF of IEC 60269-1:2024 RLV

The samples are then allowed to cool down in approximately 20 min to a temperature of approximately 30 °C; forced cooling being allowed. They are kept at this temperature for approximately 10 min and, if necessary for measuring the voltage drop, allowed to cool down further, to a temperature of (20 ± 2) °C.

The maximum voltage drop, measured at each terminal, at the end of the 192nd cycle, with the nominal current shall not exceed the smaller of the two following values:

– either 22,5 mV,
– or 1,5 times the value measured after the 24th cycle.

The measurement shall be made as near as possible to the area of contact on the terminal.

If the measuring points cannot be positioned closely to the point of contact, then the voltage drop within the part of the conductor between the ideal and the actual measuring points shall be deducted from the voltage drop measured.

The temperature in the heating cabinet must be measured at a distance of at least 50 mm from the samples.

After this test an inspection with the naked eye, by normal or corrected vision, without additional magnification, shall show no changes evidently impairing further use, such as cracks, deformations or the like.

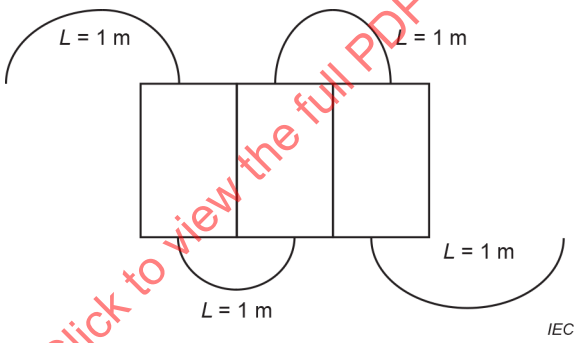

Figure E.1 – Connecting samples

IECNORM.COM : Click to view the full PDF of IEC 60269-1:2024 RLV

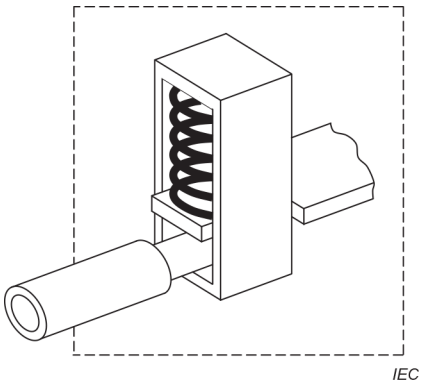

Terminal with indirect pressure

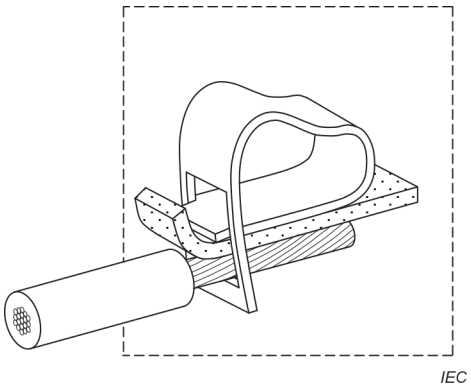

Terminal with direct pressure

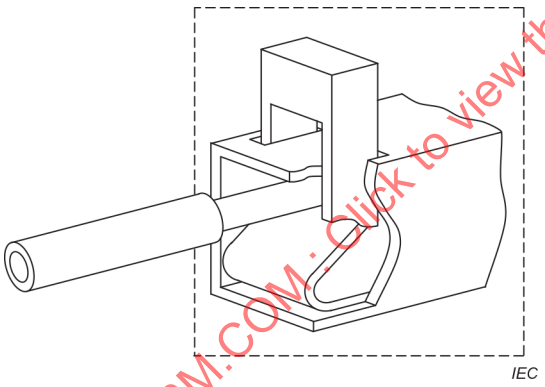

Terminal with actuating element

Figure E.2 – Examples of terminals

IECNORM.COM : Click to view the full PDF of IEC 60269-1:2024 RLV

Bibliography

IEC 60038:2009, *IEC standard voltages*
IEC 60038:2009/AMD1:2021

IEC 60050-441:1984, *International Electrotechnical Vocabulary (IEV) – Chapter 441: Switchgear, controlgear and fuses,* available at https://www.electropedia.org
IEC 60050-441:1984/AMD1:2000

IEC 60127-2, *Miniature fuses – Part 2: Cartridge fuse-links*

IEC 60228:2023, *Conductors of insulated cables*

IEC 60269-4, *Low-voltage fuses – Part 4: Supplementary requirements for fuse-links for the protection of semiconductor devices*

IEC TR 60269-5, *Low-voltage fuses – Part 5: Guidance for the application of low-voltage fuses*

IEC 60269-6, *Low-voltage fuses – Part 6: Supplementary requirements for fuse-links for the protection of solar photovoltaic energy systems*

IEC 60269-7, *Low-voltage fuses – Part 7: Supplementary requirements for fuse-links for the protection of batteries and battery systems*

IEC 60364-3:1993, *Electrical installations of buildings – Part 3: Assessment of general characteristics*

IEC 60364-5-52:2001, *Electrical installations of buildings – Part 5-52: Selection and erection of electrical equipment – Wiring systems*

IEC 60417, *Graphical symbols for use on equipment,* available at http://www.graphical-symbols.info/equipment

IEC 60695-2-10, *Fire hazard testing – Part 2-10: Glowing/hot-wire based test methods – Glow-wire apparatus and common test procedure*

IEC 60695-2-11:2000, *Fire hazard testing – Part 2-11: Glowing/hot-wire based test methods – Glow-wire flammability test method for end-products (GWEPT)*

IEC 60695-2-12:2000, *Fire hazard testing – Part 2-12: Glowing/hot-wire based test methods – Glow-wire flammability index (GWFI) test method for materials*

IEC 60695-2-13:2000, *Fire hazard testing – Part 2-13: Glowing/hot-wire based test methods – Glow-wire ignition temperature (GWIT) test method for materials*

IEC 60947-3, *Low-voltage switchgear and controlgear – Part 3: Switches, disconnectors, switch-disconnectors and fuse-combination units*

ISO 3:1973, *Preferred numbers – Series of preferred numbers*

IECNORM.COM : Click to view the full PDF of IEC 60269-1:2024 RLV

IECNORM.COM : Click to view the full PDF of IEC 60269-1:2024 RLV

SOMMAIRE

AVANT-PROPOS 91
1 Domaine d'application 94
2 Références normatives 95
3 Termes et définitions 95
3.1 Fusibles et leurs composants 95
3.2 Termes généraux 97
3.3 Grandeurs caractéristiques 99
4 Conditions de fonctionnement en service 103
4.1 Généralités 103
4.2 Température de l'air ambiant (T_a) 104
4.3 Altitude 104
4.4 Conditions atmosphériques 104
4.5 Tension 104
4.6 Courant 104
4.7 Fréquence, facteur de puissance et constante de temps 104
4.7.1 Fréquence 104
4.7.2 Facteur de puissance 105
4.7.3 Constante de temps (τ) 105
4.8 Conditions d'installation 105
4.9 Classe d'emploi 105
4.10 Sélectivité des éléments de remplacement 105
5 Classification 105
6 Caractéristiques des fusibles 105
6.1 Récapitulatif des caractéristiques 105
6.1.1 Généralités 105
6.1.2 Ensembles-porteurs 105
6.1.3 Éléments de remplacement 106
6.1.4 Fusibles complets 106
6.2 Tension assignée 106
6.3 Courant assigné 107
6.3.1 Courant assigné de l'élément de remplacement 107
6.3.2 Courant assigné de l'ensemble-porteur 107
6.4 Fréquence assignée (voir le 7.1 et le 7.2) 107
6.5 Puissance dissipée assignée d'un élément de remplacement et puissance dissipée acceptable assignée d'un ensemble-porteur 108
6.6 Limites des caractéristiques temps-courant 108
6.6.1 Généralités 108
6.6.2 Caractéristiques temps-courant, zones temps-courant 108
6.6.3 Courants et temps conventionnels 108
6.6.4 Balises 109
6.7 Zone de coupure et pouvoir de coupure 111
6.7.1 Zone de coupure et catégorie d'emploi 111
6.7.2 Pouvoir de coupure assigné 111
6.8 Caractéristiques de courant coupé limité et caractéristiques de I^2t 111
6.8.1 Généralités 111
6.8.2 Caractéristiques de courant coupé limité 111

IECNORM.COM : Click to view the full PDF of IEC 60269-1:2024 RLV

6.8.3 Caractéristiques I^2t ... 111
7 Marquages ... 112
7.1 Généralités ... 112
7.2 Marquages des ensembles-porteurs ... 112
7.3 Marquages des éléments de remplacement ... 112
8 Conditions normales de construction ... 113
8.1 Conception mécanique ... 113
8.1.1 Remplacement des éléments de remplacement ... 113
8.1.2 Connexions, y compris les bornes ... 113
8.1.3 Contacts du fusible ... 113
8.1.4 Construction de l'élément de calibrage ... 114
8.1.5 Résistance mécanique de l'élément de remplacement ... 114
8.2 Qualités isolantes et aptitude au sectionnement ... 114
8.3 Échauffement, puissance dissipée de l'élément de remplacement et puissance dissipée acceptable de l'ensemble-porteur ... 114
8.4 Fonctionnement ... 115
8.5 Pouvoir de coupure ... 116
8.6 Caractéristique de courant coupé limité ... 116
8.7 Caractéristiques I^2t ... 116
8.8 Sélectivité en cas de surintensité des éléments de remplacement ... 117
8.9 Protection contre les chocs électriques ... 117
8.9.1 Généralités ... 117
8.9.2 Lignes de fuite et distances d'isolement ... 118
8.9.3 Courants de fuite des fusibles aptes au sectionnement ... 119
8.9.4 Exigences de construction supplémentaires pour les ensembles-porteurs destinés aux fusibles solidaires aptes au sectionnement ... 119
8.10 Résistance à la chaleur ... 120
8.11 Résistance mécanique ... 120
8.12 Résistance à la corrosion ... 120
8.12.1 Généralités ... 120
8.12.2 Résistance à la rouille ... 120
8.12.3 Résistance aux tensions internes ... 120
8.13 Résistance à la chaleur anormale et au feu ... 120
8.14 Compatibilité électromagnétique ... 120
9 Essais ... 121
9.1 Vue d'ensemble ... 121
9.1.1 Généralités ... 121
9.1.2 Types d'essais ... 121
9.1.3 Température de l'air ambiant (T_a) ... 121
9.1.4 État du fusible ... 121
9.1.5 Montage du fusible et dimensions ... 121
9.1.6 Essais des éléments de remplacement ... 122
9.1.7 Essais des ensembles-porteurs ... 125
9.2 Vérification des qualités isolantes et de l'aptitude au sectionnement ... 126
9.2.1 Montage de l'ensemble-porteur ... 126
9.2.2 Vérification des qualités isolantes ... 127
9.2.3 Vérification de l'aptitude au sectionnement ... 128
9.2.4 Recevabilité des résultats d'essai ... 128

IECNORM.COM : Click to view the full PDF of IEC 60269-1:2024 RLV

9.3 Vérification des limites d'échauffement et de la puissance dissipée 129
9.3.1 Montage du fusible 129
9.3.2 Mesurage de l'échauffement 129
9.3.3 Mesurage de la puissance dissipée de l'élément de remplacement 129
9.3.4 Méthode d'essai 129
9.3.5 Recevabilité des résultats d'essai 131
9.4 Vérification du fonctionnement 131
9.4.1 Montage du fusible 131
9.4.2 Température de l'air ambiant 131
9.4.3 Méthode d'essai et recevabilité des résultats d'essai 131
9.5 Vérification du pouvoir de coupure 136
9.5.1 Montage du fusible 136
9.5.2 Caractéristiques du circuit d'essai 136
9.5.3 Dispositifs de mesure 137
9.5.4 Étalonnage du circuit d'essai 137
9.5.5 Méthode d'essai 139
9.5.6 Température de l'air ambiant 141
9.5.7 Interprétation des oscillogrammes 141
9.5.8 Recevabilité des résultats d'essai 142
9.6 Vérification des caractéristiques de courant coupé limité 142
9.6.1 Méthode d'essai 142
9.6.2 Recevabilité des résultats d'essai 142
9.7 Vérification des caractéristiques I^2t et de la sélectivité en cas de surintensité 142
9.7.1 Méthode d'essai 142
9.7.2 Recevabilité des résultats d'essai 142
9.7.3 Vérification de la conformité des éléments de remplacement à 0,01 s 143
9.7.4 Vérification de la sélectivité en cas de surintensité 143
9.8 Vérification du degré de protection des enveloppes 143
9.9 Vérification de la résistance à la chaleur 143
9.10 Vérification de la non-détérioration des contacts 143
9.10.1 Généralités 143
9.10.2 Montage du fusible 143
9.10.3 Méthode d'essai 143
9.10.4 Recevabilité des résultats d'essai 144
9.11 Essais mécaniques et divers 144
9.11.1 Résistance mécanique 144
9.11.2 Essais divers 144
9.12 Essai de durabilité des marquages 148
Annexe A (informative) Mesurage du facteur de puissance d'un court-circuit 157
Annexe B (informative) Calcul des valeurs I^2t de préarc pour les éléments de remplacement "gG", "gM" et "gU" et calcul des valeurs I^2t de fonctionnement à tension réduite 160
B.1 Évaluation de la valeur I^2t de préarc à 0,01 s 160
B.2 Calcul de la valeur I^2t de préarc dans les conditions de l'essai n° 2 160
B.3 Calcul de la valeur I^2t de fonctionnement à tension réduite 161
Annexe C (informative) Calcul de la caractéristique de courant coupé limité en fonction de la durée 162

IECNORM.COM : Click to view the full PDF of IEC 60269-1:2024 RLV

C.1 Vue d'ensemble ... 162
C.2 Note préliminaire ... 162
C.3 Définition ... 162
C.4 Caractéristique ... 163
C.5 Condition d'essai ... 163
C.6 Calcul à partir des valeurs mesurées ... 163
Annexe D (informative) Influence de la variation de la température ambiante et des conditions d'installation sur le fonctionnement des éléments de remplacement ... 166
D.1 Influence d'une augmentation de la température ambiante ... 166
D.1.1 Sur le courant assigné ... 166
D.1.2 Sur l'échauffement ... 166
D.1.3 Sur les courants conventionnels de fusion et de non-fusion (I_f et I_{nf}) ... 166
D.1.4 Conditions de démarrage du moteur ... 166
D.2 Influence d'une réduction de la température de l'air ambiant ... 166
D.3 Influence des conditions d'installation ... 166
Annexe E (normative) Exigences particulières pour les socles avec bornes sans vis pour conducteurs externes en cuivre ... 167
E.1 Généralités ... 167
E.3 Termes et définitions ... 167
E.7 Marquage ... 168
E.8 Conditions normales d'établissement ... 168
E.8.1 Connexions fixes, y compris les bornes ... 168
E.8.2 Dimensions des conducteurs raccordables ... 168
E.8.3 Sections raccordables ... 169
E.8.4 Insertion et déconnexion des conducteurs ... 169
E.8.5 Conception et construction des bornes ... 169
E.8.6 Résistance au vieillissement ... 170
E.9 Essais ... 170
E.9.1 Essai de fiabilité des bornes ... 170
E.9.2 Essais de fiabilité des bornes pour les conducteurs externes: résistance mécanique ... 170
E.9.3 Essai cyclique ... 171
Bibliographie ... 174

Figure 1 – Diagramme un exemple de vérification des caractéristiques temps-courant à partir des résultats d'essai obtenus avec les courants de "balises" ... 148
Figure 2 – Courbe de surcharge et caractéristique temps-courant des éléments de remplacement "a" ... 149
Figure 3 – Zone temps-courant des fusibles "aM" ... 150
Figure 4 – Représentation générale des caractéristiques de courant coupé limité d'une série d'éléments de remplacement pour courant alternatif ... 151
Figure 5 – Schéma type du circuit utilisé pour les essais du pouvoir de coupure (voir le 9.5) ... 152
Figure 6 – Interprétation des oscillogrammes obtenus lors des essais du pouvoir de coupure en courant alternatif (voir le 9.5.7) ... 153
Figure 7 – Interprétation des oscillogrammes obtenus lors des essais du pouvoir de coupure en courant continu (voir le 9.5.7) ... 154
Figure 8 – Fil incandescent et position du thermocouple ... 155
Figure 9 – Appareillage d'essai (exemple) ... 156

IECNORM.COM : Click to view the full PDF of IEC 60269-1:2024 RLV

Figure A.1 – Détermination de l'impédance du circuit pour le calcul du facteur de puissance selon la méthode I 159
Figure C.1 – Caractéristique de courant coupé limité en fonction de la durée réelle de préarc 165
Figure E.1 – Raccordement des échantillons 172
Figure E.2 – Exemples de bornes 173

Tableau 1 – Valeurs normalisées des tensions assignées en courant alternatif des fusibles 106
Tableau 2 – Valeurs préférentielles des tensions assignées en courant continu des fusibles 107
Tableau 3 – Courant et temps conventionnels pour les éléments de remplacement "gG" et "gM" 109
Tableau 4 – Balises des durées de préarc spécifiées pour les éléments de remplacement "gG" et "gM"[a] 110
Tableau 5 – Balises pour les éléments de remplacement "aM" (tous les courants assignés) 110
Tableau 6 – Limites d'échauffement $\Delta T = (T - T_a)$ des bornes 115
Tableau 7 – Tension d'arc maximale 116
Tableau 8 – Valeurs I^2t de préarc à 0,01 s pour les éléments de remplacement "gG" et "gM" 117
Tableau 9 – Tension assignée de tenue aux chocs 118
Tableau 10 – Distances d'isolement minimales 118
Tableau 11 – Lignes de fuite minimales 119
Tableau 12 – Liste des essais complets des éléments de remplacement et nombre d'éléments de remplacement à soumettre à l'essai 123
Tableau 13 – Liste des essais des éléments de remplacement de courant assigné le plus faible dans une série homogène et nombre d'éléments de remplacement à soumettre à l'essai 124
Tableau 14 – Liste des essais des éléments de remplacement de courant assigné compris entre le courant assigné le plus élevé et le courant assigné le plus faible d'une série homogène et nombre d'éléments de remplacement à soumettre à l'essai 125
Tableau 15 – Liste des essais complets des ensembles-porteurs et nombre d'ensembles-porteurs à soumettre à l'essai 126
Tableau 16 – Tension d'essai 127
Tableau 17 – Tension d'essai aux bornes des pôles pour la vérification de l'aptitude au sectionnement 128
Tableau 18 – Sections des conducteurs en cuivre pour les essais selon le 9.3 et le 9.4 130
Tableau 19 – Sections des conducteurs en cuivre pour l'essai des fusibles "aM" 134
Tableau 20 – Essai conformément au 9.4.3.5 135
Tableau 21 – Valeurs pour les essais du pouvoir de coupure des fusibles pour courant alternatif 138
Tableau 22 – Valeurs pour les essais du pouvoir de coupure des fusibles pour courant continu 139
Tableau E.1 – Conducteurs raccordables 169
Tableau E.2 – Sections des conducteurs en cuivre raccordables aux bornes 169
Tableau E.3 – Forces de traction 171

IECNORM.COM : Click to view the full PDF of IEC 60269-1:2024 RLV

COMMISSION ÉLECTROTECHNIQUE INTERNATIONALE

FUSIBLES BASSE TENSION –

Partie 1: Exigences générales

AVANT-PROPOS

1) La Commission Électrotechnique Internationale (IEC) est une organisation mondiale de normalisation composée de l'ensemble des comités électrotechniques nationaux (Comités nationaux de l'IEC). L'IEC a pour objet de favoriser la coopération internationale pour toutes les questions de normalisation dans les domaines de l'électricité et de l'électronique. À cet effet, l'IEC – entre autres activités – publie des Normes internationales, des Spécifications techniques, des Rapports techniques, des Spécifications accessibles au public (PAS) et des Guides (ci-après dénommés "Publication(s) de l'IEC"). Leur élaboration est confiée à des comités d'études, aux travaux desquels tout Comité national intéressé par le sujet traité peut participer. Les organisations internationales, gouvernementales et non gouvernementales, en liaison avec l'IEC, participent également aux travaux. L'IEC collabore étroitement avec l'Organisation Internationale de Normalisation (ISO), selon des conditions fixées par accord entre les deux organisations.

2) Les décisions ou accords officiels de l'IEC concernant les questions techniques représentent, dans la mesure du possible, un accord international sur les sujets étudiés, étant donné que les Comités nationaux de l'IEC intéressés sont représentés dans chaque comité d'études.

3) Les Publications de l'IEC se présentent sous la forme de recommandations internationales et sont agréées comme telles par les Comités nationaux de l'IEC. Tous les efforts raisonnables sont entrepris afin que l'IEC s'assure de l'exactitude du contenu technique de ses publications; l'IEC ne peut pas être tenue responsable de l'éventuelle mauvaise utilisation ou interprétation qui en est faite par un quelconque utilisateur final.

4) Dans le but d'encourager l'uniformité internationale, les Comités nationaux de l'IEC s'engagent, dans toute la mesure possible, à appliquer de façon transparente les Publications de l'IEC dans leurs publications nationales et régionales. Toutes divergences entre toutes Publications de l'IEC et toutes publications nationales ou régionales correspondantes doivent être indiquées en termes clairs dans ces dernières.

5) L'IEC elle-même ne fournit aucune attestation de conformité. Des organismes de certification indépendants fournissent des services d'évaluation de conformité et, dans certains secteurs, accèdent aux marques de conformité de l'IEC. L'IEC n'est responsable d'aucun des services effectués par les organismes de certification indépendants.

6) Tous les utilisateurs doivent s'assurer qu'ils sont en possession de la dernière édition de cette publication.

7) Aucune responsabilité ne doit être imputée à l'IEC, à ses administrateurs, employés, auxiliaires ou mandataires, y compris ses experts particuliers et les membres de ses comités d'études et des Comités nationaux de l'IEC, pour tout préjudice causé en cas de dommages corporels et matériels, ou de tout autre dommage de quelque nature que ce soit, directe ou indirecte, ou pour supporter les coûts (y compris les frais de justice) et les dépenses découlant de la publication ou de l'utilisation de cette Publication de l'IEC ou de toute autre Publication de l'IEC, ou au crédit qui lui est accordé.

8) L'attention est attirée sur les références normatives citées dans cette publication. L'utilisation de publications référencées est obligatoire pour une application correcte de la présente publication.

9) L'IEC attire l'attention sur le fait que la mise en application du présent document peut entraîner l'utilisation d'un ou de plusieurs brevets. L'IEC ne prend pas position quant à la preuve, à la validité et à l'applicabilité de tout droit de brevet revendiqué à cet égard. À la date de publication du présent document, l'IEC n'avait pas reçu notification qu'un ou plusieurs brevets pouvaient être nécessaires à sa mise en application. Toutefois, il y a lieu d'avertir les responsables de la mise en application du présent document que des informations plus récentes sont susceptibles de figurer dans la base de données de brevets, disponible à l'adresse https://patents.iec.ch. L'IEC ne saurait être tenue pour responsable de ne pas avoir identifié de tels droits de brevets.

L'IEC 60269-1 a été établie par le sous-comité 32B: Coupe-circuits à fusibles à basse tension, du comité d'études 32 de l'IEC: Coupe-circuits à fusibles. Il s'agit d'une Norme internationale.

Cette cinquième édition annule et remplace la quatrième édition parue en 2006, l'Amendement 1:2009 et l'Amendement 2:2014. Cette édition constitue une révision technique.

IECNORM.COM : Click to view the full PDF of IEC 60269-1:2024 RLV

Cette édition inclut les modifications techniques majeures suivantes par rapport à l'édition précédente:

a) nouvelle numérotation, corrections rédactionnelles et références normatives mises à jour;

b) le terme "discrimination" a été remplacé par "selectivity" en anglais (aucune incidence sur le terme français "sélectivité") et le terme "catégorie d'emploi" a été remplacé par "classe d'emploi";

c) le terme "fusibles destinés à être utilisés par des personnes habilitées et non qualifiées" a été mis à jour;

d) le paragraphe "Remplacement des éléments de remplacement" a été ajouté;

e) les valeurs normalisées pour les tensions en courant alternatif et en courant continu ont été mises à jour;

f) les valeurs de courant assigné 425A, 355A et 1 600A ont été ajoutées;

g) marquages: les exigences et les essais ont été séparés dans les paragraphes appropriés;

h) les exigences relatives à l'échauffement se limitent à l'échauffement des bornes uniquement;

i) le symbole graphique pour le socle a été mis à jour.

Le texte de cette Norme internationale est issu des documents suivants:

Projet	Rapport de vote
32B/748/FDIS	32B/756/RVD

Le rapport de vote indiqué dans le tableau ci-dessus donne toute information sur le vote ayant abouti à son approbation.

La langue employée pour l'élaboration de cette Norme internationale est l'anglais.

La version française de cette norme n'a pas été soumise au vote.

Ce document a été rédigé selon les Directives ISO/IEC, Partie 2, il a été développé selon les Directives ISO/IEC, Partie 1 et les Directives ISO/IEC, Supplément IEC, disponibles sous www.iec.ch/members_experts/refdocs. Les principaux types de documents développés par l'IEC sont décrits plus en détail sous www.iec.ch/standardsdev/publications.

L'IEC 60269, publiée sous le titre général *Fusibles basse tension*, est composée des parties suivantes:

Partie 1: Exigences générales

Partie 2: Exigences supplémentaires pour les fusibles destinés à être utilisés par des personnes habilitées (fusibles pour usages essentiellement industriels) – Exemples de systèmes de fusibles normalisés A à I

Partie 3: Exigences supplémentaires pour les fusibles destinés à être utilisés par des personnes non qualifiées (fusibles pour usages essentiellement domestiques et analogues) – Exemples de systèmes de fusibles normalisés A à F

Partie 4: Exigences supplémentaires concernant les éléments de remplacement utilisés pour la protection des dispositifs à semiconducteurs

Partie 5: Lignes directrices pour l'application des fusibles basse tension

Partie 6: Exigences supplémentaires concernant les éléments de remplacement utilisés pour la protection des systèmes d'énergie solaire photovoltaïque

Partie 7: Fusibles pour batteries

IECNORM.COM : Click to view the full PDF of IEC 60269-1:2024 RLV

Pour des raisons de commodité, lorsqu'une partie de cette publication est issue d'autres publications, une remarque a été insérée dans le texte.

Le comité a décidé que le contenu de ce document ne sera pas modifié avant la date de stabilité indiquée sur le site web de l'IEC sous webstore.iec.ch dans les données relatives au document recherché. À cette date, le document sera

- reconduit,
- supprimé, ou
- révisé.

IECNORM.COM : Click to view the full PDF of IEC 60269-1:2024 RLV

FUSIBLES BASSE TENSION –

Partie 1: Exigences générales

1 Domaine d'application

La présente partie de l'IEC 60269 s'applique aux fusibles qui incorporent des éléments de remplacement limiteurs de courant à fusion enfermée dont le pouvoir de coupure assigné est supérieur ou égal à 6 kA, destinés à assurer la protection des circuits à courant alternatif à fréquence industrielle dont la tension nominale ne dépasse pas 1 000 V ou des circuits à courant continu dont la tension nominale ne dépasse pas 1 500 V.

Les autres parties de la présente norme, citées dans le présent document, établissent des exigences supplémentaires pour les fusibles destinés à des conditions d'utilisation ou des applications spécifiques.

Il convient que les éléments de remplacement destinés à être utilisés dans des combinaisons fusibles/interrupteurs selon l'IEC 60947-3 respectent également les exigences suivantes.

Sauf indication contraire dans les autres parties relatives aux éléments de remplacement, il convient d'indiquer les caractéristiques de fonctionnement (voir le 3.2.4) sur les circuits à courant continu dans la documentation technique du fabricant.

NOTE 1 Les modifications et compléments au présent document, exigés pour certains types de fusibles destinés à des applications particulières – par exemple, fusibles destinés au matériel roulant ou aux circuits à haute fréquence – sont traités dans des normes distinctes, si nécessaire.

NOTE 2 Le présent document ne s'applique pas aux fusibles miniatures, qui sont couverts par l'IEC 60127.

Cette série de normes a pour objet d'établir les caractéristiques des fusibles ou de leurs parties (socle, porte-élément de remplacement, élément de remplacement) de sorte qu'ils puissent être remplacés par d'autres fusibles ou parties de fusibles possédant les mêmes caractéristiques, sous réserve qu'ils soient interchangeables du point de vue de leurs dimensions. À cette fin, cette série de normes traite en particulier des points suivants:

– les caractéristiques suivantes des fusibles:
  - valeurs assignées;
  - isolement;
  - échauffement en service normal;
  - puissance dissipée et puissance dissipée acceptable;
  - caractéristiques temps/courant;
  - pouvoir de coupure;
  - caractéristiques de courant coupé limité et caractéristiques I^2t;
– un essai de type destiné à vérifier les caractéristiques des fusibles;
– le marquage des fusibles.

IECNORM.COM : Click to view the full PDF of IEC 60269-1:2024 RLV

2 Références normatives

Les documents suivants sont cités dans le texte de sorte qu'ils constituent, pour tout ou partie de leur contenu, des exigences du présent document. Pour les références datées, seule l'édition citée s'applique. Pour les références non datées, la dernière édition du document de référence s'applique (y compris les éventuels amendements).

IEC 60269-2, *Fusibles basse tension – Partie 2: Exigences supplémentaires pour les fusibles destinés à être utilisés par des personnes habilitées (fusibles pour usages essentiellement industriels) – Exemples de systèmes de fusibles normalisés A à K*

IEC 60529, *Degrés de protection procurés par les enveloppes (Code IP)*

IEC 60584-1:2013, *Couples thermoélectriques – Partie 1: Spécifications et tolérances en matière de FEM*

IEC 60617, *Symboles graphiques pour schémas*

IEC 60664-1:2002, *Coordination de l'isolement des matériels dans les réseaux d'énergie électrique à basse tension – Partie 1: Principes, exigences et essais*

3 Termes et définitions

Pour les besoins du présent document, les termes et définitions suivants s'appliquent.

L'ISO et l'IEC tiennent à jour des bases de données terminologiques destinées à être utilisées en normalisation, consultables aux adresses suivantes:

- IEC Electropedia: disponible à l'adresse http://www.electropedia.org/
- ISO Online browsing platform: disponible à l'adresse http://www.iso.org/obp

NOTE Pour les définitions générales relatives aux fusibles, voir également l'IEC 60050-441.

3.1 Fusibles et leurs composants

3.1.1
fusible
coupe-circuit à fusibles
appareil dont la fonction est d'ouvrir par la fusion d'un ou de plusieurs de ses éléments conçus et calibrés à cet effet le circuit dans lequel il est inséré en coupant le courant lorsque celui-ci dépasse pendant un temps suffisant une valeur donnée. Le fusible comprend toutes les parties qui constituent l'appareil complet

[SOURCE: IEC 60050-441:1984, 441-18-01]

3.1.2
ensemble-porteur
combinaison d'un socle et de son porte-élément de remplacement

Note 1 à l'article: Lorsque, dans la présente norme, le terme "ensemble-porteur" est utilisé, il désigne les socles et/ou les porte-éléments de remplacement, s'il n'est pas nécessaire de faire une distinction entre les deux.

[SOURCE: IEC 60050-441:1984, 441-18-14]

IECNORM.COM : Click to view the full PDF of IEC 60269-1:2024 RLV

3.1.2.1
socle
partie fixe d'un fusible munie de contacts et de bornes

Note 1 à l'article: Le cas échéant, les enveloppes sont considérées comme faisant partie du socle.

[SOURCE: IEC 60050-441:1984, 441-18-02]

3.1.2.2
porte-élément de remplacement
partie amovible d'un fusible destinée à recevoir un élément de remplacement

[SOURCE: IEC 60050-441:1984, 441-18-13]

3.1.3
élément de remplacement
partie d'un fusible comprenant le (les) élément(s) fusible(s) et destinée à être remplacée après fonctionnement du fusible

[SOURCE: IEC 60050-441:1984, 441-18-09]

3.1.4
contact du fusible
deux ou plusieurs parties conductrices destinées à assurer la continuité électrique entre un élément de remplacement et l'ensemble-porteur correspondant

3.1.5
élément fusible
partie de l'élément de remplacement destinée à fondre sous l'action d'un courant dépassant une valeur déterminée pendant une durée déterminée

Note 1 à l'article: L'élément de remplacement peut comporter plusieurs éléments fusibles montés en parallèle.

[SOURCE: IEC 60050-441:1984, 441-18-08]

3.1.6
dispositif indicateur
partie d'un fusible destinée à indiquer si celui-ci a fonctionné

[SOURCE: IEC 60050-441:1984, 441-18-17]

3.1.7
percuteur
dispositif mécanique faisant partie d'un élément de remplacement qui, lors du fonctionnement du fusible, libère l'énergie requise pour faire fonctionner d'autres appareils, des dispositifs indicateurs ou pour effectuer un verrouillage

[SOURCE: IEC 60050-441:1984, 441-18-18]

3.1.8
borne
partie conductrice d'un fusible prévue pour la connexion électrique avec des circuits extérieurs

Note 1 à l'article: Les bornes peuvent être distinguées selon le type de circuit auquel elles sont destinées (borne principale, borne de terre, etc.) et également selon leur conception (borne à vis, borne à fiche, etc.).

3.1.9
élément de remplacement conventionnel d'essai
élément de remplacement d'essai à puissance dissipée et de dimensions définies

IECNORM.COM : Click to view the full PDF of IEC 60269-1:2024 RLV

3.1.10
socle conventionnel d'essai
socle d'essai défini

3.1.11
élément de calibrage
partie supplémentaire d'un socle destinée à assurer un degré de non-interchangeabilité

3.1.12
porte-fusible solidaire
porte-élément de remplacement mécaniquement lié au socle et donnant un mouvement défini d'insertion et de retrait de l'élément de remplacement

3.2 Termes généraux

3.2.1
élément de remplacement à fusion enfermée
élément de remplacement dont l'élément fusible ou les éléments fusibles sont totalement enfermés, de sorte qu'au cours du fonctionnement dans la limite de ses caractéristiques assignées, il ne peut provoquer aucun effet nuisible externe, par exemple effet dû au développement d'un arc, à l'émission de gaz ou à la projection de flammes ou de particules métalliques

[SOURCE: IEC 60050-441:1984, 441-18-12]

3.2.2
élément de remplacement limiteur de courant
élément de remplacement qui, pendant et par son fonctionnement dans une zone de courant spécifiée, limite le courant à une valeur nettement inférieure à la valeur de crête du courant présumé

[SOURCE: IEC 60050-441:1984, 441-18-10]

3.2.3
élément de remplacement "g"
<élément de remplacement à pouvoir de coupure intégral, antérieurement appelé "à usage général">
élément de remplacement limiteur de courant capable d'interrompre, dans les conditions spécifiées, tous les courants et qui provoque une fusion de l'élément fusible jusqu'à son pouvoir de coupure assigné

3.2.4
élément de remplacement "a"
<élément de remplacement à pouvoir de coupure partiel, antérieurement appelé "d'accompagnement">
élément de remplacement limiteur de courant capable d'interrompre, dans les conditions spécifiées, tous les courants compris entre le courant le plus faible indiqué sur sa caractéristique temps-courant de fonctionnement ($k_2 I_n$ sur la Figure 2) et son pouvoir de coupure assigné

Note 1 à l'article: Les éléments de remplacement "a" sont généralement utilisés pour assurer la protection contre les courts-circuits. Si une protection contre des surintensités inférieures à $k_2 I_n$ sur la Figure 2 est exigée, ils sont utilisés avec un autre coupe-circuit approprié conçu afin d'interrompre les surintensités de faible valeur.

IECNORM.COM : Click to view the full PDF of IEC 60269-1:2024 RLV

3.2.5
températures

3.2.5.1
température de l'air ambiant
T_a
température de l'air extérieur au fusible (à 1 m environ de celui-ci ou de son enveloppe éventuelle)

3.2.5.2
température de l'élément
T
<élément (contact, borne, etc.)>
température de l'élément considéré

3.2.6
sélectivité en cas de surintensité
coordination entre les caractéristiques considérées de deux ou de plusieurs dispositifs de protection à maximum de courant de telle sorte qu'à l'apparition de surintensités dans les limites fixées, le dispositif prévu pour fonctionner entre ces limites fonctionne, tandis que le ou les autres ne fonctionnent pas

[SOURCE: IEC 60050-441:1984, 441-17-15, modifié – "discrimination" a été remplacé par "selectivity" dans le terme (aucune incidence sur le terme français "sélectivité") et "de fonctionnement" a été remplacé par "considérées " dans la définition]

3.2.7
système de fusibles
famille de fusibles construits selon les mêmes principes de conception physique en ce qui concerne la forme des éléments de remplacement, le type de contact, etc.

3.2.8
taille
ensemble de dimensions spécifiées pour les fusibles à l'intérieur d'un système de fusibles.

Note 1 à l'article: Chaque taille couvre une plage donnée de courants assignés à l'intérieur desquels les dimensions normalisées des fusibles restent identiques.

3.2.9
série homogène d'éléments de remplacement
série d'éléments de remplacement d'une taille donnée dont chacun ne diffère de l'autre que par des caractéristiques telles que, pour un essai donné, l'essai d'un seul ou d'un nombre réduit d'éléments de remplacement déterminés de la série peut être considéré comme représentatif de tous les éléments de remplacement de la série

Note 1 à l'article: Les caractéristiques par lesquelles un élément de remplacement d'une série homogène peut différer des autres, ainsi que le choix de l'élément de remplacement à soumettre aux essais sont spécifiés en fonction des essais considérés (voir le Tableau 12 et le Tableau 13).

[SOURCE: IEC 60050-441:1984, 441-18-34, modifié – La Note 1 à l'article a été remplacée]

3.2.10
classe d'emploi (d'un élément de remplacement)
ensemble d'exigences spécifiées relatives aux conditions dans lesquelles l'élément de remplacement remplit sa fonction, choisies pour représenter un groupe caractéristique d'applications pratiques (voir le 6.7.1)

IECNORM.COM : Click to view the full PDF of IEC 60269-1:2024 RLV

3.2.11
fusibles destinés à être utilisés par des personnes habilitées et non qualifiées
systèmes de fusibles divisés en systèmes destinés à être utilisés par des personnes habilitées et par des personnes non qualifiées

Note 1 à l'article: Pour un remplacement sûr des éléments de remplacement utilisés par des personnes habilitées, des compétences particulières sont nécessaires.

Le terme "personne habilitée" désigne une personne qui relève des catégories BA 4 "averties" (IEC 60050-826:2022, 826-18-02) et BA 5 "qualifiées" (IEC 60050-826:2022, 826-18-01).

Les réglementations nationales peuvent remplacer ces définitions.

Les personnes averties sont des personnes suffisamment informées ou surveillées par des personnes qualifiées pour éviter les dangers que peut présenter l'électricité (agents d'entretien ou d'exploitation).

Les personnes qualifiées disposent des connaissances techniques ou d'une expérience suffisante pour éviter les dangers que peut présenter l'électricité (ingénieurs et techniciens). Par exemple, les dangers pour les personnes peuvent provenir du contact avec des parties actives pendant le fonctionnement et le remplacement d'éléments de remplacement en charge.

Les personnes non qualifiées ne disposent pas des connaissances techniques ou d'une expérience suffisante. Pour éviter les dangers que l'électricité peut présenter, la partie de la norme relative aux fusibles doit fournir des exigences pour une sécurité maximale en service. L'IEC 60269-3 définit quatre systèmes destinés à être utilisés par des personnes non qualifiées.

3.2.12
rechange d'un élément de remplacement
échange d'un élément de remplacement

3.2.13
non-interchangeabilité
caractéristiques limitatives de forme ou de dimensions destinées à éviter l'utilisation par mégarde, sur un socle déterminé, d'éléments de remplacement ayant des propriétés électriques autres que celles assurant le degré voulu de protection

[SOURCE: IEC 60050-441:1984, 441-18-33]

3.3 Grandeurs caractéristiques

3.3.1
caractéristiques assignées
terme général employé pour désigner chacune des valeurs caractéristiques qui définissent ensemble les conditions de fonctionnement d'après lesquelles les essais sont déterminés et pour lesquelles le matériel a été établi

[SOURCE: IEC 60050-441:1984, 441-18-36]

Note 1 à l'article: Les valeurs assignées généralement indiquées pour les fusibles basse tension sont les suivantes: tension, courant, pouvoir de coupure, puissance dissipée et puissance dissipée acceptable, et fréquence, s'il y a lieu. En courant alternatif, la tension assignée et le courant assigné indiqués sont les valeurs efficaces symétriques. En courant continu, s'il y a des ondulations, la tension assignée s'entend pour la valeur moyenne, le courant assigné pour la valeur efficace. Sauf indication contraire, la définition ci-dessus s'applique à toute valeur de tension et de courant.

IECNORM.COM : Click to view the full PDF of IEC 60269-1:2024 RLV

3.3.2
courant présumé (d'un circuit et relatif à un fusible)
courant qui circulerait dans le circuit si l'élément de remplacement ou les éléments de remplacement étaient remplacés par un conducteur d'impédance négligeable

Note 1 à l'article: En courant alternatif, le courant présumé est exprimé par la valeur efficace de la composante alternative.

Note 2 à l'article: Le courant présumé est la grandeur à laquelle se rapportent normalement le pouvoir de coupure et les caractéristiques du fusible, par exemple les caractéristiques I^2t et les caractéristiques de courant coupé limité (voir le 9.5.7).

[SOURCE: IEC 60050-441:1984, 441-17-01, modifié – "chaque pôle de l'appareil de connexion ou le fusible était remplacé" a été remplacé par "l'élément de remplacement ou les éléments de remplacement étaient remplacés", et la Note à l'article a été remplacée]

3.3.3
balises
valeurs limites à l'intérieur desquelles se trouvent les caractéristiques, par exemple les caractéristiques temps-courant

3.3.4
pouvoir de coupure d'un fusible
valeur du courant présumé qu'un fuse est capable d'interrompre à une tension fixée dans des conditions prescrites d'emploi et de comportement

[SOURCE: IEC 60050-441:1984, 441-17-08, modifié – "d'un appareil de connexion ou d'un fusible" a été remplacé par "d'un élément de remplacement" dans le terme, "qu'un appareil de connexion ou un fusible" a été remplacé par "qu'un élément de remplacement" dans la définition et la Note à l'article a été supprimée]

3.3.5
zone de coupure
plage de courants présumés à l'intérieur desquels le pouvoir de coupure d'un élément de remplacement est assuré

3.3.6
courant coupé limité
valeur instantanée maximale du courant atteinte pendant le fonctionnement d'un élément de remplacement lorsqu'il fonctionne de manière à empêcher le courant d'atteindre la valeur maximale qu'il atteindrait autrement

3.3.7
caractéristique de courant coupé limité
courbe donnant, pour des conditions déterminées de fonctionnement, le courant coupé limité en fonction du courant présumé

Note 1 à l'article: En courant alternatif, les valeurs du courant coupé limité sont les valeurs maximales quel que soit le degré d'asymétrie. En courant continu, ce sont les valeurs du courant coupé limité maximales atteintes compte tenu de la constante de temps spécifiée.

[SOURCE: IEC 60050-441:1984, 441-17-14]

3.3.8
valeur de crête du courant admissible (d'un ensemble-porteur)
valeur du courant coupé limité que l'ensemble-porteur peut supporter

Note 1 à l'article: La valeur de crête du courant admissible n'est pas inférieure au courant coupé limité le plus élevé de l'élément de remplacement avec lequel l'ensemble-porteur est destiné à être utilisé.

IECNORM.COM : Click to view the full PDF of IEC 60269-1:2024 RLV

3.3.9
durée de préarc; durée de fusion
intervalle de temps qui s'écoule à partir du moment où commence à circuler un courant suffisant pour provoquer une coupure dans l'élément fusible ou les éléments fusibles jusqu'à l'instant où un arc commence à se former

[SOURCE: IEC 60050-441:1984, 441-18-21]

3.3.10
durée d'arc d'un élément de remplacement
intervalle de temps entre l'instant de début de l'arc sur un fusible et l'instant de l'extinction finale de l'arc sur ce fusible

[SOURCE: IEC 60050-441:1984, 441-17-37, modifié – Le mot "pôle" a été supprimé dans le terme et la définition]

3.3.11
durée de fonctionnement
somme de la durée de préarc et de la durée d'arc

[SOURCE: IEC 60050-441:1984, 441-18-22]

3.3.12
I^2t; intégrale de Joule
intégrale du carré du courant pour un intervalle de temps donné:

$$I^2t = \int_{t_0}^{t_1} i^2 \mathrm{d}t$$

Note 1 à l'article: L'I^2t de préarc est l'intégrale I^2t pour la durée de préarc du fusible.

Note 2 à l'article: L'I^2t de fonctionnement est l'intégrale I^2t pour la durée de fonctionnement du fusible.

Note 3 à l'article: L'énergie en joules libérée dans une portion ayant une résistance de 1 Ω d'un circuit protégé par un fusible est égale à la valeur de I^2t de fonctionnement exprimée en A^2s.

[SOURCE: IEC 60050-441:1984, 441-18-23]

3.3.13
caractéristique I^2t
courbe qui donne les valeurs I^2t (I^2t de préarc et/ou I^2t de fonctionnement) en fonction de la valeur du courant présumé et pour des conditions de fonctionnement déterminées

3.3.14
zone I^2t
bande comprise entre la caractéristique I^2t de préarc minimale et la caractéristique I^2t de fonctionnement maximale dans les conditions spécifiées

3.3.15
courant assigné d'un élément de remplacement
I_n
valeur du courant que l'élément de remplacement est capable de supporter de façon continue dans les conditions spécifiées, sans détérioration

IECNORM.COM : Click to view the full PDF of IEC 60269-1:2024 RLV

3.3.16
caractéristique temps-courant
courbe donnant la durée, par exemple durée de préarc ou durée de fonctionnement, en fonction du courant présumé dans des conditions déterminées de fonctionnement

Note 1 à l'article: Pour des temps supérieurs à 0,1 s, il n'existe en pratique aucune différence entre la durée de préarc et la durée de fonctionnement.

[SOURCE: IEC 60050-441:1984, 441-17-13]

3.3.17
zone temps-courant
plage comprise entre les caractéristiques minimales de durée-courant de préarc et la caractéristique maximale de durée-courant de fonctionnement dans les conditions spécifiées

3.3.18
courant conventionnel de non-fusion
I_{nf}
valeur spécifiée du courant que peut supporter sans fondre l'élément de remplacement pendant un intervalle de temps spécifié, dit temps conventionnel

[SOURCE: IEC 60050-441:1984, 441-18-27]

3.3.19
courant conventionnel de fusion
I_f
valeur spécifiée qui provoque le fonctionnement de l'élément de remplacement avant la fin d'un intervalle de temps spécifié dit temps conventionnel

[SOURCE: IEC 60050-441:1984, 441-18-28]

3.3.20
courbe de surcharge d'un élément de remplacement "a"
courbe qui indique le temps pendant lequel un élément de remplacement "a" est capable de supporter le courant considéré, sans détérioration

VOIR: 9.4.3.4 et la Figure 2

3.3.21
puissance dissipée (d'un élément de remplacement)
puissance dissipée dans un élément de remplacement traversé par un courant électrique de valeur donnée dans des conditions prescrites d'emploi et de comportement

Note 1 à l'article: Les conditions prescrites d'emploi et de comportement comprennent généralement une valeur efficace constante du courant électrique après avoir atteint un régime établi de température.

[SOURCE: IEC 60050-441:1984/AMD1:2000, 441-18-38]

3.3.22
puissance dissipée acceptable (par un socle ou un ensemble-porteur)
valeur indiquée de la puissance dissipée dans un élément de remplacement qu'un socle ou un ensemble-porteur peut admettre dans des conditions prescrites d'emploi et de comportement

[SOURCE: IEC 60050-441:1984/AMD1:2000, 441-18-39]

IECNORM.COM : Click to view the full PDF of IEC 60269-1:2024 RLV

3.3.23
tension de rétablissement
tension qui apparaît aux bornes d'un fusible après l'interruption du courant

Note 1 à l'article: Cette tension peut être considérée pendant deux intervalles de temps consécutifs, l'un durant lequel existe une tension transitoire (voir le 2.3.23.1), suivi d'un second intervalle durant lequel seule la tension de rétablissement à la fréquence industrielle ou en courant continu existe (voir le 2.3.23.2).

[SOURCE: IEC 60050-441:1984, 441-17-25, modifié – "d'un appareil de connexion" a été supprimé dans la définition, et la Note 1 à l'article a été modifiée.]

3.3.23.1
tension transitoire de rétablissement
TTR
tension de rétablissement pendant le temps où elle présente un caractère transitoire appréciable

Note 1 à l'article: La tension transitoire de rétablissement peut être oscillatoire ou non oscillatoire ou être une combinaison de celles-ci selon les caractéristiques du circuit et du fusible. Elle tient compte de la variation du potentiel du point neutre du circuit polyphasé.

Note 2 à l'article: Sauf spécification contraire, la tension transitoire de rétablissement pour les circuits triphasés est la tension aux bornes du premier pôle qui coupe, car cette tension est généralement plus élevée que celle qui apparaît aux bornes de chacun des deux autres pôles.

[SOURCE: IEC 60050-441:1984, 441-17-26]

3.3.23.2
tension de rétablissement à fréquence industrielle ou en courant continu
tension de rétablissement après la dissipation des phénomènes transitoires de tension

Note 1 à l'article: La tension de rétablissement à fréquence industrielle ou en courant continu peut être exprimée en pourcentage de la tension assignée.

[SOURCE: IEC 60050-441:1984, 441-17-27, modifié – "ou en courant continu" a été ajouté au terme, et la Note 1 à l'article a été ajoutée.]

3.3.24
tension d'arc d'un fusible
valeur instantanée de la tension qui apparaît entre les bornes d'un fusible pendant la durée de l'arc

[SOURCE: IEC 60050-441:1984, 441-18-30]

3.3.25
distance de sectionnement (pour un fusible)
la plus courte distance entre les contacts du socle ou toutes parties conductrices qui leur sont raccordées, mesurée sur un fusible dont l'élément de remplacement ou le porte-élément de remplacement n'est plus en place

[SOURCE: IEC 60050-441:1984, 441-18-06]

4 Conditions de fonctionnement en service

4.1 Généralités

Lorsque les conditions ci-après s'appliquent, les fusibles conformes à la présente norme sont considérés comme étant capables de fonctionner correctement sans qualification supplémentaire. Ces conditions s'appliquent également aux essais, sauf spécification contraire à l'Article 9.

IECNORM.COM : Click to view the full PDF of IEC 60269-1:2024 RLV

4.2 Température de l'air ambiant (T_a)

La température de l'air ambiant T_a (voir le 3.2.5.1) ne dépasse pas 40 °C, sa valeur moyenne mesurée sur une période de 24 h étant inférieure à 35 °C et sa valeur moyenne mesurée annuelle étant également inférieure.

La valeur minimale de la température de l'air ambiant est de −5 °C.

Lorsque les conditions de température s'écartent sensiblement de ces valeurs, il convient d'en tenir compte du point de vue du fonctionnement, des échauffements, etc. Voir l'Annexe D.

NOTE Les caractéristiques temps-courant données reposent sur une température de l'air ambiant de référence de 20 °C. Ces caractéristiques temps-courant sont également valables pour une température de l'air ambiant d'environ 30 °C.

4.3 Altitude

L'altitude du lieu d'installation des fusibles ne dépasse pas 2 000 m au-dessus du niveau de la mer.

4.4 Conditions atmosphériques

L'air est propre, et son humidité relative ne dépasse pas 50 % à la température maximale de 40 °C.

Une humidité relative supérieure est admise à des températures plus basses, par exemple 90 % à 20 °C.

Dans ces conditions, les variations de température peuvent parfois conduire à une condensation modérée.

Si des fusibles doivent être utilisés dans des conditions différentes de celles indiquées en 4.1, en 4.2 et en 4.3, en particulier lorsqu'ils sont utilisés à l'extérieur sans protection, les informations doivent être fournies dans la documentation technique des fabricants. Cela s'applique également aux cas où des dépôts de sel provenant de la mer ou des dépôts anormaux d'origine industrielle peuvent se produire.

4.5 Tension

La valeur maximale de la tension du réseau ne dépasse pas 110 % de la tension assignée du fusible. Dans le cas d'un courant continu obtenu par redressement d'un courant alternatif, les ondulations ne doivent pas provoquer de variation supérieure à 5 % ou inférieure à 9 % autour de la valeur moyenne de 110 % de la tension assignée.

Pour les fusibles de tension assignée égale à 690 V, la tension maximale du réseau ne doit pas dépasser 105 % de la tension assignée du fusible.

NOTE L'attention est attirée sur le fait que le dispositif indicateur ou le percuteur d'un fusible peut ne pas fonctionner si l'élément de remplacement fonctionne à une tension considérablement inférieure à sa tension assignée (voir le 9.4.3.6).

4.6 Courant

Les courants à supporter et à couper se trouvent dans la plage spécifiée en 8.4 et en 8.5.

4.7 Fréquence, facteur de puissance et constante de temps

4.7.1 Fréquence

En courant alternatif, la fréquence est la fréquence assignée de l'élément de remplacement.

IECNORM.COM : Click to view the full PDF of IEC 60269-1:2024 RLV

4.7.2 Facteur de puissance

En courant alternatif, le facteur de puissance n'est pas inférieur à la valeur indiquée dans le Tableau 20 pour la valeur correspondante du courant présumé.

4.7.3 Constante de temps (τ)

En courant continu, la constante de temps correspond à la valeur indiquée dans le Tableau 21.

Il existe des conditions de service, où la constante de temps peut dépasser les limites indiquées dans le Tableau 21. Dans un tel cas, un élément de remplacement qui a été soumis à l'essai pour vérifier qu'il respecte la constante de temps exigée et qui comporte les marquages adéquats doit être utilisé.

4.8 Conditions d'installation

Le fusible est installé conformément aux instructions du fabricant.

Lorsque le fusible est susceptible d'être exposé à des vibrations ou des chocs anormaux en conditions de service, il convient de consulter le fabricant.

4.9 Classe d'emploi

Les catégories d'emploi ("gG", par exemple) sont spécifiées conformément en 6.7.1.

4.10 Sélectivité des éléments de remplacement

Les limites de sélectivité pour des temps supérieurs à 0,1 s sont données dans le Tableau 2 et le Tableau 3.

Pour les éléments de remplacement "gG" et "gM" les valeurs de I^2t de préarc sont données dans le Tableau 7 et les valeurs de I^2t de fonctionnement sont données dans les autres parties. Les valeurs pour les autres zones de coupure et catégories d'emploi sont fournies dans les autres parties.

5 Classification

Les fusibles sont classés conformément à l'Article 6 et aux autres parties.

6 Caractéristiques des fusibles

6.1 Récapitulatif des caractéristiques

6.1.1 Généralités

Les caractéristiques d'un fusible doivent être indiquées dans les termes suivants, lorsque de tels termes s'appliquent.

6.1.2 Ensembles-porteurs

a) Tension assignée (voir le 6.2).

b) Courant assigné (voir le 6.3.2).

c) Type de courant et fréquence assignée, s'il y a lieu (voir le 6.4).

d) Puissance dissipée acceptable assignée (voir le 6.5).

e) Dimensions ou taille.

IECNORM.COM : Click to view the full PDF of IEC 60269-1:2024 RLV

f) Nombre de pôles, s'il y en a plus d'un.

g) Valeur de crête du courant admissible.

6.1.3 Éléments de remplacement

a) Tension assignée (voir le 6.2).

b) Courant assigné (voir le 6.3.1).

c) Type de courant et fréquence assignée, s'il y a lieu (voir le 6.4).

d) Puissance dissipée assignée (voir le 6.5).

e) Caractéristiques temps-courant (voir le 6.6).

f) Zone de coupure (voir le 6.7.1).

g) Pouvoir de coupure assigné (voir le 6.7.2).

h) Caractéristiques de courant coupé limité (voir le 6.8.1).

i) Caractéristiques I^2t (voir le 6.8.2).

k) Dimensions ou taille.

6.1.4 Fusibles complets

Degré de protection selon l'IEC 60529.

6.2 Tension assignée

En courant alternatif, les valeurs normalisées des tensions assignées sont données dans le Tableau 1.

Tableau 1 – Valeurs normalisées des tensions assignées en courant alternatif des fusibles

Série I V	Série II V
	120
	208
230	240
	277
400*	415
500	480
690	600
1 000	347

IECNORM.COM : Click to view the full PDF of IEC 60269-1:2024 RLV

En courant continu, les valeurs normalisées des tensions assignées sont données dans le Tableau 2.

Tableau 2 – Valeurs préférentielles des tensions assignées en courant continu des fusibles

Série I V	Série II V
	110
220	
	250
400	
440	460
500	
	600
750	
1 000	
	1 200
1 500	

Pour des applications spécifiques, les tensions assignées des différentes valeurs du Tableau 1 et du Tableau 2 doivent être fournies dans les instructions du fabricant.

NOTE La tension assignée du fusible est la valeur la plus basse des tensions assignées de ses parties (ensemble-porteur, élément de remplacement).

6.3 Courant assigné

6.3.1 Courant assigné de l'élément de remplacement

Les courants assignés préférentiels des éléments de remplacement sont les valeurs suivantes, exprimées en A:

2 – 4 – 6 – 8 – 10 – 12 – 13 – 16 – 20 – 25 – 32 – 35 – 40 – 50 – 63 – 80 – 100 – 125 – 160 – 200 – 224 – 250 – 315 – 355 – 400 – 425 – 500 – 630 – 800 – 1 000 – 1 250 – 1 600

S'il est nécessaire de choisir des valeurs inférieures, intermédiaires ou supérieures, il convient de choisir ces valeurs à partir de la série R10 de la norme ISO 3 et, dans des cas exceptionnels, à partir de la série R20 ou R40 de l'ISO 3.

6.3.2 Courant assigné de l'ensemble-porteur

Sauf spécification contraire dans les autres parties, il convient de choisir le courant assigné en ampères de l'ensemble-porteur parmi la série de courants assignés des éléments de remplacement. Pour les fusibles "gG" et "aM", le courant assigné de l'ensemble-porteur est le courant assigné le plus élevé de l'élément de remplacement avec lequel il est destiné à être utilisé.

6.4 Fréquence assignée (voir le 7.1 et le 7.2)

L'absence de marquage de la fréquence assignée doit signifier que le fusible remplit les conditions établies dans la présente norme uniquement pour des fréquences comprises entre 45 Hz et 62 Hz.

IECNORM.COM : Click to view the full PDF of IEC 60269-1:2024 RLV

6.5 Puissance dissipée assignée d'un élément de remplacement et puissance dissipée acceptable assignée d'un ensemble-porteur

Sauf spécification contraire dans les autres parties, la puissance dissipée assignée d'un élément de remplacement est fixée par le fabricant. Cette valeur ne doit pas être dépassée dans les conditions d'essai spécifiées.

Sauf spécification contraire dans les autres parties, la puissance dissipée acceptable assignée pour un ensemble-porteur est fixée par le fabricant. Elle est considérée comme la puissance dissipée maximale que l'ensemble-porteur peut accepter dans les conditions d'essai spécifiées sans dépassement des valeurs d'échauffement spécifiées.

6.6 Limites des caractéristiques temps-courant

6.6.1 Généralités

Les limites reposent sur une température de l'air ambiant de référence T_a de +20 °C.

6.6.2 Caractéristiques temps-courant, zones temps-courant

Elles dépendent de la conception de l'élément de remplacement ainsi que, pour un élément de remplacement donné, de la température de l'air ambiant et des conditions de refroidissement.

NOTE Pour les températures de l'air ambiant qui ne sont pas comprises dans la plage de températures indiquée en 4.1, il est nécessaire de consulter le fabricant.

Pour les éléments de remplacement non conformes aux zones temps-courant normalisées spécifiées dans les autres parties, il convient que le fabricant puisse indiquer (avec leurs tolérances):

– les caractéristiques temps-courant de préarc et de fonctionnement

ou

– la zone temps-courant.

NOTE Pour des durées de préarc inférieures à 0,1 s, il convient que le fabricant fournisse les caractéristiques I^2t avec leurs tolérances (voir le 6.8.3).

Lorsqu'elles sont représentées, il convient d'indiquer les caractéristiques temps-courant pour les durées de préarc supérieures à 0,1 s, en portant le courant en abscisse et le temps en ordonnée. Des échelles logarithmiques doivent être utilisées sur les deux coordonnées.

Les bases des échelles logarithmiques (dimensions d'une décade) doivent être dans le rapport 2/1 en portant les plus grandes dimensions en abscisse. Cependant, pour tenir compte d'une pratique en vigueur depuis longtemps dans d'autres pays (système de fusibles UL, par exemple), un rapport de 1/1 est admis en variante.

6.6.3 Courants et temps conventionnels

Les courants et temps conventionnels pour les éléments de remplacement "gG" et "gM" sont spécifiés dans le Tableau 3.

IECNORM.COM : Click to view the full PDF of IEC 60269-1:2024 RLV

Tableau 3 – Courant et temps conventionnels pour les éléments de remplacement "gG" et "gM"

Courant assigné I_n pour "gG"	Temps conventionnel	Courant conventionnel	
Courant caractéristique I_{ch} pour "gM"[b] A	h	I_{nf}	I_f
I_n < 16	1	a	a
16 ≤ I_n ≤ 63	1		
63 < I_n ≤ 160	2	1,25 I_n	1,6 I_n
160 < I_n ≤ 400	3		
400 < I_n	4		

[a] Les valeurs pour les éléments de remplacement dont le courant assigné est inférieur à 16 A sont données dans les autres parties.

[b] Pour les éléments de remplacement "gM", voir le 6.7.1.

6.6.4 Balises

Pour les éléments de remplacement "gG" et "gM", les balises indiquées dans le Tableau 4 s'appliquent.

IECNORM.COM : Click to view the full PDF of IEC 60269-1:2024 RLV

Tableau 4 – Balises des durées de préarc spécifiées pour les éléments de remplacement "gG" et "gM"[a]

1 I_n pour "gG" I_{ch} pour "gM" [b] A	2 I_{min} (10 s) [c] A	3 I_{max} (5 s) A	4 I_{min} (0,1 s) A	5 I_{max} (0,1 s) A
13	24	65	65	130
16	33	65	85	150
20	42	85	110	200
25	52	110	150	260
32	75	150	200	350
35	83	175	225	445
40	95	190	260	450
50	125	250	350	610
63	160	320	450	820
80	215	425	610	1 100
100	290	580	820	1 450
125	355	715	1 100	1 910
160	460	950	1 450	2 590
200	610	1 250	1 910	3 420
224	600	1 600	2 000	4 300
250	750	1 650	2 590	4 500
315	1 050	2 200	3 420	6 000
355	1 100	2 750	3 500	7 700
400	1 420	2 840	4 500	8 060
425	1 350	3 300	4 500	9 500
450	1 600	3 300	5 250	9 300
500	1 780	3 800	6 000	10 600
630	2 200	5 000	8 060	14 140
800	3 060	7 000	10 600	19 000
1 000	4 000	9 500	14 140	24 000
1 250	5 000	13 000	19 000	35 000
1 600	7 500	16 000	24 000	43 000

[a] Les valeurs pour les fusibles dont le courant assigné est inférieur à 13 A sont spécifiées dans les autres parties.

[b] Pour les éléments de remplacement "gM", voir le 6.7.1.

[c] I_{min} (10 s) est la valeur minimale du courant pour laquelle la durée de préarc n'est pas inférieure à 10 s.

Pour les fusibles "aM", les balises normalisées des caractéristiques temps-courant reposent sur une température de l'air ambiant de référence de 20 °C. Elles sont indiquées dans le Tableau 5 et représentées sur la Figure 3. Les facteurs normalisés k sont k_0 = 1,5; k_1 = 4 et k_2 = 6,3.

Tableau 5 – Balises pour les éléments de remplacement "aM" (tous les courants assignés)

	4 I_n	6,3 I_n	8 I_n	10 I_n	12,5 I_n	19 I_n
$t_{fonctionnement}$	-	60 s	-	-	0,5 s	0,10 s
$t_{préarc}$	60 s	-	0,5 s	0,2 s	-	-

IECNORM.COM : Click to view the full PDF of IEC 60269-1:2024 RLV

6.7 Zone de coupure et pouvoir de coupure

6.7.1 Zone de coupure et catégorie d'emploi

La première lettre doit indiquer la zone de coupure:

– éléments de remplacement "g" (éléments de remplacement à pouvoir de coupure intégral);
– éléments de remplacement "a" (éléments de remplacement à pouvoir de coupure partiel).

La seconde lettre doit indiquer la catégorie d'emploi; cette lettre définit avec exactitude les caractéristiques temps-courant, les temps et courants conventionnels, les balises.

6.7.2 Pouvoir de coupure assigné

Le pouvoir de coupure assigné d'un élément de remplacement est indiqué par le fabricant en fonction de la tension assignée. Des valeurs du pouvoir de coupure assigné minimal sont indiquées dans les autres parties.

6.8 Caractéristiques de courant coupé limité et caractéristiques de I^2t

6.8.1 Généralités

Les valeurs des caractéristiques de courant coupé limité et des caractéristiques de I^2t doivent tenir compte des tolérances de fabrication et se rapporter aux conditions de service spécifiées dans les autres parties en ce qui concerne, par exemple, les valeurs de la tension, de la fréquence et du facteur de puissance.

6.8.2 Caractéristiques de courant coupé limité

Les caractéristiques de courant coupé limité doivent représenter les valeurs instantanées maximales du courant susceptibles de se produire en service (voir le 9.6.1 et l'Annexe C).

Si les caractéristiques de courant coupé limité sont exigées, sauf spécification contraire dans les autres parties, il convient qu'elles soient fournies par le fabricant conformément à l'exemple de la Figure 4, sur du papier à double échelle logarithmique, en portant le courant présumé en abscisse.

6.8.3 Caractéristiques I^2t

Les caractéristiques I^2t de préarc pour des durées de préarc comprises entre 0,1 s et la durée correspondant au pouvoir de coupure assigné doivent être indiquées par le fabricant. Elles doivent représenter les valeurs les plus basses susceptibles de se produire en service en fonction du courant présumé.

Les caractéristiques I^2t de fonctionnement avec des tensions spécifiées doivent être indiquées par le fabricant pour des durées de préarc inférieures à 0,1 s. Elles doivent représenter les valeurs les plus élevées susceptibles de se produire en service en fonction du courant présumé.

Lorsqu'elles sont représentées sous forme graphique, les caractéristiques I^2t doivent être indiquées en portant le courant présumé en abscisse et I^2t en ordonnée. Des échelles logarithmiques doivent être utilisées sur les deux coordonnées. (Pour l'utilisation d'échelles logarithmiques, voir le 6.6.2.)

IECNORM.COM : Click to view the full PDF of IEC 60269-1:2024 RLV

7 Marquages

7.1 Généralités

Le marquage doit être résistant et facilement lisible. La conformité est vérifiée par l'essai du 9.12.

NOTE 1 Les marquages du courant assigné et de la tension assignée peuvent, par exemple, se présenter comme suit:

$$10\ \text{A} \qquad 500\ \text{V} \qquad \text{ou } 10/500 \qquad \text{ou } \frac{10}{500}$$

NOTE 2 Pour toutes les parties des fusibles, les symboles applicables de l'IEC 60417 peuvent être utilisés.

7.2 Marquages des ensembles-porteurs

Les informations suivantes doivent être marquées sur tous les ensembles-porteurs:

– nom du fabricant ou marque commerciale permettant de l'identifier facilement;
– référence d'identification du fabricant permettant de retrouver l'ensemble des caractéristiques indiquées en 6.1.2;
– tension assignée;
– courant assigné;
– type de courant et fréquence assignée, s'il y a lieu.

Un ensemble-porteur portant un marquage des caractéristiques assignées en courant alternatif peut également être utilisé pour les systèmes à courant continu si un ensemble-porteur contient un socle amovible et un porte-élément de remplacement amovible. Il convient de les marquer séparément pour permettre leur identification.

7.3 Marquages des éléments de remplacement

Les informations suivantes doivent être marquées sur l'ensemble des éléments de remplacement, à l'exception des éléments de remplacement de petites dimensions, sur lesquels il n'est pas possible d'inscrire l'ensemble de ces informations:

– nom du fabricant ou marque commerciale permettant de l'identifier facilement;
– référence d'identification du fabricant permettant de retrouver l'ensemble des caractéristiques indiquées en 6.1.3;
– tension assignée;
– courant assigné;
– zone de coupure et catégorie d'emploi (symboles), s'il y a lieu (voir le 6.7.1);
– type de courant et fréquence assignée, s'il y a lieu (voir le 6.4).

Il convient de marquer séparément les caractéristiques en courant alternatif et en courant continu sur l'élément de remplacement si celui-ci est destiné à être utilisé avec des réseaux à courant alternatif et à courant continu.

Dans le cas des éléments de remplacement de petites dimensions, sur lesquels il n'est pas possible d'inscrire l'ensemble des informations spécifiées, le marquage doit comporter la marque commerciale, la référence de catalogue du fabricant, la tension assignée et le courant assigné.

IECNORM.COM : Click to view the full PDF of IEC 60269-1:2024 RLV

8 Conditions normales de construction

8.1 Conception mécanique

8.1.1 Remplacement des éléments de remplacement

Un élément de remplacement doit présenter une résistance mécanique appropriée, et ses contacts doivent être solidement fixés.

8.1.2 Connexions, y compris les bornes

Les connexions fixes doivent être réalisées de manière à maintenir la force de contact nécessaire dans les conditions de service et de fonctionnement.

La force de contact exercée sur les connexions ne doit pas être transmise à travers des matériaux isolants autres que la céramique ou d'autres matériaux dont les caractéristiques ne sont pas équivalentes, sauf si les parties métalliques sont suffisamment élastiques pour compenser un éventuel retrait ou toute autre déformation du matériau isolant. Les essais éventuellement nécessaires sont indiqués dans les autres parties.

Les bornes doivent être conçues de telle sorte qu'elles ne puissent pas tourner ni se déplacer lors du serrage des vis et que la position des conducteurs ne puisse pas être modifiée. Les parties serrant les conducteurs doivent être en métal et doivent avoir une forme telle qu'elles ne puissent pas endommager les conducteurs de manière excessive.

Les bornes doivent être disposées de manière à être facilement accessibles (après enlèvement des couvercles, s'il en existe) dans les conditions d'installation prévues.

NOTE Les exigences relatives aux bornes sans vis sont données à l'Annexe E.

8.1.3 Contacts du fusible

Les contacts du fusible doivent être réalisés de manière à maintenir la force de contact nécessaire dans les conditions de service et de fonctionnement, en particulier dans les conditions du 8.5.

Le contact doit être tel que les forces électromagnétiques qui se produisent en fonctionnement dans les conditions indiquées en 8.5 ne provoquent aucune détérioration de la connexion électrique entre:

a) le socle et le porte-élément de remplacement;

b) le porte-élément de remplacement et l'élément de remplacement;

c) l'élément de remplacement et le socle, ou, le cas échéant, tout autre support.

De plus, en raison de leur construction et du matériau utilisé, les contacts du fusible doivent être tels que, lorsque le fusible est correctement installé et que les conditions de service sont normales, le maintien d'un contact adéquat est assuré:

a) après des opérations de retrait et d'insertion répétées;

b) après un maintien en service sans perturbations pendant une durée prolongée (voir le 9.10).

Les contacts du fusible en alliage de cuivre ne doivent pas présenter de tensions internes.

Ces exigences sont vérifiées par les essais conformément au 9.10, au 9.11.2.1 et à l'Article 8 des autres parties de l'IEC 60269.

IECNORM.COM : Click to view the full PDF of IEC 60269-1:2024 RLV

8.1.4 Construction de l'élément de calibrage

L'élément de calibrage, si nécessaire, doit être conçu de façon à résister aux contraintes normales susceptibles de se produire pendant l'utilisation.

8.1.5 Résistance mécanique de l'élément de remplacement

Un élément de remplacement doit présenter une résistance mécanique appropriée, et ses contacts doivent être solidement fixés.

8.2 Qualités isolantes et aptitude au sectionnement

Les fusibles doivent être tels qu'ils ne perdent pas leurs qualités isolantes aux tensions auxquelles ils sont soumis en service normal. Le fusible doit être apte au sectionnement lorsque celui-ci est dans sa position normale d'ouverture, l'élément de remplacement restant dans le porte-élément de remplacement, ou lorsque l'élément de remplacement et, le cas échéant, le porte-élément de remplacement sont retirés. La catégorie de surtension applicable est spécifiée dans les autres parties.

Le fusible doit être considéré comme étant conforme à ces conditions s'il satisfait aux essais de vérification des qualités isolantes et de l'aptitude au sectionnement conformément au 9.2.

Les valeurs minimales des lignes de fuite, des distances d'isolement dans l'air et des distances à travers le matériau isolant ou de remplissage doivent satisfaire aux valeurs spécifiées dans les autres parties.

8.3 Échauffement, puissance dissipée de l'élément de remplacement et puissance dissipée acceptable de l'ensemble-porteur

L'ensemble-porteur doit être conçu et dimensionné de manière à supporter d'une façon continue, dans des conditions normalisées de service, le courant assigné de l'élément de remplacement dont il est équipé, sans dépasser:

– les limites d'échauffement spécifiées dans le Tableau 6 à la puissance dissipée acceptable assignée de l'ensemble-porteur indiquée par le fabricant ou spécifiée dans les autres parties.

L'élément de remplacement doit être conçu et dimensionné de manière à supporter d'une façon continue, dans des conditions normalisées de service, son courant assigné sans dépasser:

– la puissance dissipée assignée de l'élément de remplacement indiquée par le fabricant ou spécifiée dans les autres parties.

En particulier, les limites d'échauffement spécifiées dans le Tableau 6 ne doivent pas être dépassées:

– lorsque le courant assigné de l'élément de remplacement est égal au courant assigné de l'ensemble-porteur destiné à recevoir cet élément de remplacement;

– lorsque la puissance dissipée de l'élément de remplacement est égale à la puissance dissipée acceptable assignée de l'ensemble-porteur.

Ces exigences sont vérifiées par les essais effectués conformément au 9.3.

IECNORM.COM : Click to view the full PDF of IEC 60269-1:2024 RLV

Tableau 6 – Limites d'échauffement $\Delta T = (T - T_a)$ des bornes

	Contacts	Échauffement ΔT en K
Bornes	Cuivre nu	60
	Laiton nu ou étamé	65
	Plaqué argent ou nickel	70 [a)]

[a)] La limite d'échauffement dépend de l'utilisation de conducteurs isolés au PVC ou, pour les autres méthodes de couplage ou conducteurs, le fabricant doit fournir les valeurs maximales d'échauffement dans sa documentation et les caractéristiques assignées des conducteurs doivent être respectées. Les limites de température du fusible et du conducteur doivent être cohérentes.

8.4 Fonctionnement

L'élément de remplacement doit être conçu et dimensionné de telle sorte que, lorsqu'il est soumis à l'essai dans le montage d'essai approprié à la fréquence assignée et à une température de l'air ambiant de (20 ± 5) °C,

– il soit capable de supporter d'une façon continue tout courant inférieur ou égal à son courant assigné;
– il soit capable de supporter les conditions de surcharge pouvant se produire en service normal (voir le 9.4.3.4).

Pour un élément de remplacement "g", cela signifie,

– que l'élément de remplacement ne fonctionne pas dans un temps inférieur au temps conventionnel lorsqu'il est parcouru par un courant inférieur ou égal au courant conventionnel de non-fusion (I_{nf});
– qu'il fonctionne dans un délai inférieur au temps conventionnel lorsqu'il est parcouru par un courant supérieur ou égal au courant de fusion conventionnel (I_f).

NOTE Les zones temps-courant, s'il y en a, doivent être prises en compte.

Pour un élément de remplacement "a", cela signifie,

– que l'élément de remplacement ne fonctionne pas lorsqu'il est parcouru par un courant inférieur ou égal à $k_1 I_n$ pendant le temps correspondant indiqué sur la courbe de surcharge (voir la Figure 2);
– que lorsqu'il est parcouru par un courant compris entre $k_1 I_n$ et $k_2 I_n$, l'élément fusible peut fondre, sous réserve que la durée de préarc soit supérieure à la valeur indiquée par la caractéristique temps-courant de préarc;
– qu'il fonctionne à l'intérieur de la zone temps-courant, y compris la durée d'arc, lorsqu'il est parcouru par un courant supérieur à $k_2 I_n$.

Les valeurs temps-courant mesurées selon le 9.4.3.3 doivent se trouver à l'intérieur de la zone temps-courant indiquée par le fabricant.

Ces conditions sont considérées comme remplies si l'élément de remplacement satisfait aux essais prescrits en 9.4.

IECNORM.COM : Click to view the full PDF of IEC 60269-1:2024 RLV

8.5 Pouvoir de coupure

Le fusible doit être capable de couper, à la fréquence assignée et à une tension inférieure ou égale à la tension de rétablissement indiquée en 9.5, tout circuit dont le courant présumé est compris entre,

– pour les éléments de remplacement "g": le courant I_f;

– pour les éléments de remplacement "a": le courant $k_2 I_n$; et

– en courant alternatif, le pouvoir de coupure assigné avec des facteurs de puissance supérieurs ou égaux à ceux indiqués dans le Tableau 21 pour la valeur du courant présumé correspondante;

– en courant continu, le pouvoir de coupure assigné avec des constantes de temps inférieures aux limites indiquées dans le Tableau 22 pour la valeur du courant présumé correspondante.

Lors du fonctionnement de l'élément de remplacement dans un circuit d'essai comme cela est décrit en 9.5, la tension d'arc ne doit pas dépasser les valeurs indiquées dans le Tableau 7.

NOTE Lorsque les éléments de remplacement sont utilisés dans des circuits dont les tensions du réseau sont inférieures à la tension assignée des éléments de remplacement, il convient de s'assurer que la tension d'arc ne dépasse pas la valeur indiquée dans le Tableau 7 pour la tension du réseau correspondante.

Tableau 7 – Tension d'arc maximale

Tension assignée U_n de l'élément de remplacement V		**Tension d'arc maximale, valeur de crête** V
Courants alternatif et continu	Jusqu'à 60 inclus	1 000
	61 à 300	2 000
	301 à 690	2 500
	691 à 800	3 000
	801 à 1 000	3 500
Courant continu seulement	1 001 à 1 200	3 500
	1 201 à 1 500	5 000
NOTE Pour des éléments de remplacement de courant assigné inférieur à 16 A, les valeurs de tension d'arc maximale ne sont pas spécifiées dans la présente norme, mais sont à l'étude.		

Ces conditions doivent être considérées comme remplies si le fusible satisfait aux essais prescrits en 9.5.

8.6 Caractéristique de courant coupé limité

Sauf spécification contraire dans les autres parties, les valeurs du courant coupé limité, mesurées comme cela est spécifié en 9.6, doivent être inférieures ou égales aux valeurs issues des caractéristiques de courant coupé limité fixées par le fabricant (voir le 6.8.2).

NOTE Pour les caractéristiques de courant coupé limité en fonction de la durée réelle de préarc, voir l'Annexe C.

8.7 Caractéristiques I^2t

Les valeurs I^2t de préarc, vérifiées selon le 9.7, ne doivent pas être inférieures aux caractéristiques indiquées par le fabricant conformément au 6.8.3 et doivent être comprises entre les limites indiquées dans le Tableau 8 pour les éléments de remplacement "gG" et "gM". Pour des durées de préarc inférieures à 0,01 s, les limites éventuellement exigées sont indiquées dans les autres parties. Les valeurs des éléments de remplacement "gD" et "gN" sont données dans l'IEC 60269-2 pour le système de fusibles H.

IECNORM.COM : Click to view the full PDF of IEC 60269-1:2024 RLV

Les valeurs I^2t de fonctionnement, vérifiées conformément au 9.7, doivent être inférieures ou égales aux caractéristiques indiquées par le fabricant conformément au 6.8.3 ou spécifiées dans les autres parties.

Tableau 8 – Valeurs I^2t de préarc à 0,01 s pour les éléments de remplacement "gG" et "gM"

I_n pour "gG" I_{ch} pour "gM" A	I^2t_{min} $10^3 \times (A^2s)$	I^2t_{max} $10^3 \times (A^2s)$
16	0,3	1,0
20	0,5	1,8
25	1,0	3,0
32	1,8	5,0
35	2,2	8,0
40	3,0	9,0
50	5,0	16,0
63	9,0	27,0
80	16,0	46,0
100	27,0	86,0
125	46,0	140,0
160	86,0	250,0
200	140,0	400,0
224	200,0	520,0
250	250,0	760,0
315	400,0	1 300,0
400	760,0	2 250,0
500	1 300,0	3 800,0
630	2 250,0	7 500,0
800	3 800,0	13 600,0
1 000	7 840,0	25 000,0
1 250	13 700,0	47 000,0

IECNORM.COM : Click to view the full PDF of IEC 60269-1:2024 RLV

8.8 Sélectivité en cas de surintensité des éléments de remplacement

Les exigences relatives à la sélectivité lors d'une surintensité dépendent du système de fusibles, de la tension assignée et de l'emploi du fusible. Les exigences associées peuvent être fournies dans les autres parties.

8.9 Protection contre les chocs électriques

8.9.1 Généralités

Pour la protection des personnes contre les chocs électriques, trois états du fusible doivent être pris en considération:

– lorsque le fusible est complet, installé et raccordé, c'est-à-dire équipé du socle, de l'élément de remplacement et, le cas échéant, du porte-élément de remplacement, de l'élément de calibrage et de l'enveloppe du fusible (condition de service normale);

– pendant le remplacement de l'élément de remplacement;

– lorsque l'élément de remplacement et, le cas échéant, le porte-élément de remplacement sont enlevés.

La tension assignée de tenue aux chocs est donnée dans le Tableau 9 en fonction de la tension assignée et de la catégorie de surtension du fusible, qui sont spécifiées dans les autres parties.

Les exigences associées sont spécifiées dans les autres parties. Voir aussi le 9.8.

Tableau 9 – Tension assignée de tenue aux chocs

Tension assignée du fusible inférieure ou égale à V	**Tension assignée de tenue aux chocs U_{imp} (1,2/50 µs)** kV			
	Catégorie de surtension			
	IV	**III**	**II**	**I**
230	4	2,5	1,5	0,8
400	6	4	2,5	1,5
690	8	6	4	2,5
1 000	12	8	6	4

8.9.2 Lignes de fuite et distances d'isolement

Les distances d'isolement ne doivent pas être inférieures aux valeurs données dans le Tableau 10 afin de réduire le risque de décharges disruptives dues aux surtensions.

Tableau 10 – Distances d'isolement minimales

	Distances d'isolement minimales mm
Tension assignée de tenue aux chocs U_{imp} kV	**Conditions de champ non homogène**
0,8	0,8
1,5	0,8
2,5	1,5
4,0	3,0
6,0	5,5
8,0	8,0
12,0	14,0
NOTE Les valeurs des distances d'isolement minimales dans l'air reposent sur des tensions de choc de 1,2/50 µs à une pression barométrique de 80 kPa, équivalente à la pression atmosphérique normale à 2 000 m au-dessus du niveau de la mer.	

Les lignes de fuite doivent aussi correspondre au groupe de matériau, comme cela est défini en 2.7.1.3 de l'IEC 60664-1:2002, par rapport à la tension assignée indiquée dans le Tableau 11.

IECNORM.COM : Click to view the full PDF of IEC 60269-1:2024 RLV

Tableau 11 – Lignes de fuite minimales

	Lignes de fuite pour les matériels sujets à des contraintes de longue durée mm		
Tension assignée du fusible inférieure ou égale à V	**Groupe de matériau** I	**Groupe de matériau** II	**Groupe de matériau** III
230	3,2	3,6	4
400	5	5,6	6,3
690	8	9	10
1 000	12,5	14	16

8.9.3 Courants de fuite des fusibles aptes au sectionnement

Pour les fusibles aptes au sectionnement et dont la tension assignée est supérieure à 50 V, le courant de fuite doit être mesuré aux bornes de chaque pôle, les contacts étant en position d'ouverture.

La valeur du courant de fuite mesurée à une tension d'essai égale à 1,1 fois la tension assignée ne doit pas dépasser:

- 0,5 mA par pôle pour les fusibles à l'état neuf;
- 2 mA par pôle pour les fusibles qui ont été soumis aux essais selon le 9.5.

8.9.4 Exigences de construction supplémentaires pour les ensembles-porteurs destinés aux fusibles solidaires aptes au sectionnement

L'ensemble-porteur doit être marqué avec le symbole IEC 60617-S00369.

NOTE 1 Symbole IEC 60617. Nouvelle définition à double ouverture à utiliser (2021-04-29).

Fusible-sectionneur à double ouverture du SC 34B C "Socle"

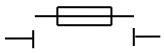

Lorsque le fusible est en position d'ouverture, l'élément de remplacement restant dans le porte-élément de remplacement, la distance de sectionnement entre les contacts du fusible conformément à la fonction de sectionnement doit être donnée. L'indication de cette position doit être fournie par la position du porte-élément de remplacement.

Cette exigence est vérifiée conformément au 9.2.

Lorsqu'il existe un dispositif de verrouillage spécifié par le fabricant afin de bloquer les fusibles en position sectionnée, le verrouillage ne doit être possible que dans cette position. Les fusibles doivent être conçus de telle sorte que le porte-élément de remplacement reste solidaire du socle, ce qui donne une bonne indication de la position d'ouverture et, le cas échéant, du verrouillage.

NOTE 2 Le verrouillage en position fermée est admis pour des applications particulières.

Pour les fusibles incorporant des circuits électroniques connectés aux pôles principaux, le sectionnement du ou des circuits électroniques est admis pendant les essais diélectriques.

IECNORM.COM : Click to view the full PDF of IEC 60269-1:2024 RLV

8.10 Résistance à la chaleur

Tous les composants doivent présenter une résistance suffisante à la chaleur qui peut se produire en usage normal.

Sauf spécification contraire dans les autres parties, cette exigence est considérée comme respectée lorsque des résultats satisfaisants sont obtenus lors des essais selon le 9.9 et le 9.10.

8.11 Résistance mécanique

Tous les composants du fusible doivent présenter une résistance suffisante aux contraintes mécaniques qui peuvent se produire en usage normal.

Sauf spécification contraire dans les autres parties, cette exigence est considérée comme respectée lorsque des résultats satisfaisants sont obtenus lors des essais selon les 9.3 à 9.5 et selon le 9.11.1.

8.12 Résistance à la corrosion

8.12.1 Généralités

Tous les composants métalliques du fusible doivent être résistants aux influences corrosives qui peuvent se produire en usage normal.

8.12.2 Résistance à la rouille

Les composants en métal ferreux doivent être protégés de manière à satisfaire aux essais correspondants.

Sauf spécification contraire dans les autres parties, cette exigence est considérée comme respectée lorsque des résultats satisfaisants sont obtenus lors des essais selon le 9.11.2.3 et le 9.11.2.3.

8.12.3 Résistance aux tensions internes

Les parties transportant le courant doivent présenter une résistance suffisante aux tensions internes. Les essais correspondants sont spécifiés en 9.11.2.1 et en 9.11.2.1.

8.13 Résistance à la chaleur anormale et au feu

Tous les composants du fusible doivent présenter une résistance suffisante à la chaleur anormale et au feu. L'essai est spécifié en 9.11.2.2.

8.14 Compatibilité électromagnétique

Les fusibles relevant du domaine d'application de la présente norme ne sont pas sensibles aux perturbations électromagnétiques normales, et par conséquent aucun essai d'immunité n'est exigé.

Les perturbations électromagnétiques importantes générées par un fusible sont limitées au moment de son fonctionnement. Les exigences pour la compatibilité électromagnétique sont considérées comme étant respectées, sous réserve que les tensions d'arc maximales en fonctionnement lors des essais de type respectent les exigences du 8.5.

IECNORM.COM : Click to view the full PDF of IEC 60269-1:2024 RLV

9 Essais

9.1 Vue d'ensemble

9.1.1 Généralités

Les essais doivent être effectués conformément aux règles de l'IEC.

9.1.2 Types d'essais

Les essais spécifiés dans le présent paragraphe sont des essais de type; ils sont effectués sous la responsabilité du fabricant.

Si une défaillance se produit au cours de l'un de ces essais et que le fabricant peut démontrer que cette défaillance n'est pas inhérente au type de fusible, mais qu'elle est due à un défaut propre à l'échantillon en essai, l'essai correspondant doit être répété. Cela ne s'applique pas à l'essai du pouvoir de coupure.

Si des essais de réception sont fixés par accord entre l'utilisateur et le fabricant, l'essai doit être choisi parmi les essais de type.

Les essais de type sont effectués afin de vérifier qu'un type particulier de fusible ou un nombre de fusibles composant une série homogène (voir le 9.1.6.3) respecte les caractéristiques spécifiées et qu'il fonctionne de façon satisfaisante dans les conditions normales de service ou dans les conditions particulières spécifiées.

Si un fusible satisfait à l'essai de type, tous les fusibles de construction identique sont considérés comme étant conformes aux exigences du présent document.

Si une partie du fusible est modifiée de manière à compromettre les résultats d'un essai de type déjà effectué, cet essai de type doit être répété.

9.1.3 Température de l'air ambiant (T_a)

La température de l'air ambiant doit être mesurée au moyen de dispositifs de mesure protégés contre les courants d'air et tout rayonnement de chaleur, placés à mi-hauteur du fusible à une distance d'environ 1 m de celui-ci. Au début de chaque essai, le fusible doit se trouver approximativement à la température de l'air ambiant.

9.1.4 État du fusible

Les essais doivent être effectués sur des fusibles propres et secs.

9.1.5 Montage du fusible et dimensions

À l'exception de l'essai du degré de protection (voir le 9.8), le fusible doit être disposé à l'air libre et à l'abri des courants d'air en position de service normale, par exemple en position verticale, et, sauf spécification contraire, sur un support en matériau isolant de rigidité suffisante pour supporter les forces qui se produisent en l'absence de toute force extérieure exercée sur le fusible en essai.

L'élément de remplacement doit être monté soit comme en usage normal, soit dans l'ensemble-porteur pour lequel il est prévu, soit dans un socle d'essai conformément aux indications données dans le paragraphe correspondant d'une autre partie.

Avant de commencer les essais, les dimensions extérieures spécifiées doivent être mesurées et les résultats comparés aux dimensions spécifiées dans les feuilles particulières correspondantes du fabricant ou spécifiées dans les autres parties.

IECNORM.COM : Click to view the full PDF of IEC 60269-1:2024 RLV

9.1.6 Essais des éléments de remplacement

9.1.6.1 Généralités

Sauf spécification contraire dans les autres parties, les éléments de remplacement doivent être soumis à l'essai avec le ou les types de courants et, pour les réseaux à courant alternatif, à la fréquence assignée.

9.1.6.2 Essais complets

Avant de commencer les essais, la résistance interne R de tous les échantillons doit être mesurée à une température de l'air ambiant de (20 ± 5) °C avec un courant de mesure inférieur ou égal à 0,1 I_n. La valeur de R doit être consignée dans le rapport d'essai.

La liste des essais complets est donnée dans le Tableau 12.

9.1.6.3 Essais des éléments de remplacement d'une série homogène

Des éléments de remplacement de courants assignés différents sont considérés comme composant une série homogène si les conditions suivantes sont remplies:

– leurs enveloppes sont de forme, de construction et, à l'exception de celles des éléments fusibles, de dimensions identiques. Cette condition est également remplie lorsque seuls les contacts de l'élément de remplacement sont différents. Dans ce cas, les essais sont effectués sur l'élément de remplacement dont les contacts sont les plus susceptibles de donner les résultats d'essai les plus défavorables;

– leur matière d'extinction d'arc et leur degré de remplissage sont identiques;

– leurs éléments fusibles sont réalisés dans des matériaux identiques. Ils doivent être de longueur et de forme identiques;

NOTE Par exemple, ils peuvent être découpés à l'aide d'outils identiques dans des matériaux d'épaisseurs différentes.

– leur section, qui peut varier sur la longueur des éléments fusibles, ainsi que le nombre d'éléments fusibles ne doivent pas être supérieurs à ceux des éléments de remplacement qui présentent le courant assigné le plus élevé;

– les distances minimales entre éléments fusibles voisins ainsi que chaque élément fusible et la surface intérieure de l'enveloppe ne sont pas inférieures à celles de l'élément de remplacement qui présente le courant assigné le plus élevé;

– ils conviennent à une utilisation avec un ensemble-porteur donné ou sans ensemble-porteur, mais dans un montage identique pour tous les courants assignés de la série homogène.

– de plus, en ce qui concerne l'essai d'échauffement, le produit $RI_n^{3/2}$ n'est pas supérieur à la valeur correspondante de l'élément de remplacement qui présente le courant assigné le plus élevé dans la série homogène. La résistance R doit être mesurée lorsque l'élément de remplacement se trouve dans les conditions indiquées en 9.1.6.2;

– de plus, en ce qui concerne l'essai du pouvoir de coupure, le pouvoir de coupure assigné n'est pas supérieur à celui de l'élément de remplacement dont le courant assigné est le plus élevé dans la série homogène. Si ce n'est pas le cas, l'élément de remplacement dont le courant assigné est le plus élevé parmi ceux dont le pouvoir de coupure assigné est le plus élevé doit être soumis aux essais n° 1 et n° 2.

Pour les éléments de remplacement d'une série homogène,

– l'élément de remplacement qui présente le courant assigné le plus élevé doit être soumis à l'ensemble des essais indiqués dans le Tableau 12;

– l'élément de remplacement qui présente le courant assigné le plus faible ne doit être soumis qu'aux essais indiqués dans le Tableau 13;

IECNORM.COM : Click to view the full PDF of IEC 60269-1:2024 RLV