IEC 60974-10

Edition 4.0 2020-04
REDLINE VERSION

INTERNATIONAL STANDARD

colour inside

Arc welding equipment –
Part 10: Electromagnetic compatibility (EMC) requirements

IECNORM.COM : Click to view the full PDF of IEC 60974-10:2020 RLV

IEC 60974-10:2020-04 RLV(en)

THIS PUBLICATION IS COPYRIGHT PROTECTED
Copyright © 2020 IEC, Geneva, Switzerland

All rights reserved. Unless otherwise specified, no part of this publication may be reproduced or utilized in any form or by any means, electronic or mechanical, including photocopying and microfilm, without permission in writing from either IEC or IEC's member National Committee in the country of the requester. If you have any questions about IEC copyright or have an enquiry about obtaining additional rights to this publication, please contact the address below or your local IEC member National Committee for further information.

IEC Central Office
3, rue de Varembé
CH-1211 Geneva 20
Switzerland

Tel.: +41 22 919 02 11
info@iec.ch
www.iec.ch

About the IEC
The International Electrotechnical Commission (IEC) is the leading global organization that prepares and publishes International Standards for all electrical, electronic and related technologies.

About IEC publications
The technical content of IEC publications is kept under constant review by the IEC. Please make sure that you have the latest edition, a corrigendum or an amendment might have been published.

IEC publications search - webstore.iec.ch/advsearchform
The advanced search enables to find IEC publications by a variety of criteria (reference number, text, technical committee,…). It also gives information on projects, replaced and withdrawn publications.

IEC Just Published - webstore.iec.ch/justpublished
Stay up to date on all new IEC publications. Just Published details all new publications released. Available online and once a month by email.

IEC Customer Service Centre - webstore.iec.ch/csc
If you wish to give us your feedback on this publication or need further assistance, please contact the Customer Service Centre: sales@iec.ch.

Electropedia - www.electropedia.org
The world's leading online dictionary on electrotechnology, containing more than 22 000 terminological entries in English and French, with equivalent terms in 16 additional languages. Also known as the International Electrotechnical Vocabulary (IEV) online.

IEC Glossary - std.iec.ch/glossary
67 000 electrotechnical terminology entries in English and French extracted from the Terms and Definitions clause of IEC publications issued since 2002. Some entries have been collected from earlier publications of IEC TC 37, 77, 86 and CISPR.

IECNORM.COM : Click to view the full PDF of IEC 60974-10:2020 RLV

IEC 60974-10

Edition 4.0 2020-04
REDLINE VERSION

INTERNATIONAL STANDARD

colour inside

Arc welding equipment –
Part 10: Electromagnetic compatibility (EMC) requirements

IECNORM.COM : Click to view the full PDF of IEC 60974-10:2020 RLV

INTERNATIONAL
ELECTROTECHNICAL
COMMISSION

ICS 25.160.30

ISBN 978-2-8322-8223-6

Warning! Make sure that you obtained this publication from an authorized distributor.

® Registered trademark of the International Electrotechnical Commission

CONTENTS

FOREWORD 5
1 Scope 7
2 Normative references 7
3 Terms and definitions 9
4 General test requirements 12
4.1 Test conditions 12
4.2 Measuring instruments 12
4.3 Artificial mains network 12
4.4 Voltage probe 12
4.5 Antennas 12
4.6 ~~Load~~ Coupling/decoupling network (CDN) 13
5 Test set-up for emission and immunity 13
5.1 General 13
5.2 Load 16
5.3 Ancillary equipment 17
5.3.1 General requirements 17
5.3.2 Wire feeders 17
5.3.3 Remote controls 17
5.3.4 Arc striking and stabilizing devices 17
5.3.5 Liquid cooling systems 18
6 Emission tests 18
6.1 Classification for RF emission tests 18
6.1.1 Class A equipment 18
6.1.2 Class B equipment 18
6.2 Test conditions 18
6.2.1 Welding power source 18
6.2.2 Load voltages 20
6.2.3 Wire feeders 20
6.2.4 Ancillary equipment 20
6.3 Emission limits 20
6.3.1 General 20
6.3.2 Mains terminal disturbance voltage 20
6.3.3 Conducted emissions at signal, control and measurement ports 22
6.3.4 Output current ripple 22
6.3.5 Electromagnetic radiation disturbance 23
6.3.6 Harmonics, voltage fluctuations and flicker 25
7 Immunity tests 26
7.1 Classification for immunity tests 26
7.1.1 Applicability of tests 26
7.1.2 Category 1 equipment 26
7.1.3 Category 2 equipment 26
7.2 Test conditions 27
7.3 Immunity performance criteria 27
7.3.1 Performance criterion A 27
7.3.2 Performance criterion B 27
7.3.3 Performance criterion C 27

IECNORM.COM : Click to view the full PDF of IEC 60974-10:2020 RLV

7.4 Immunity levels ... 27
8 Documentation for the purchaser/user ... 30
Annex A (informative) Installation and use ... 32
A.1 General ... 32
A.2 Assessment of area ... 32
A.3 Assessment of welding installation ... 32
A.4 Mitigation measures ... 33
Annex B (informative) Limits ... 34
B.1 General ... 39
B.2 Conducted disturbance voltage limits ... 39
B.3 Output current ripple limit ... 39
B.4 Radiated disturbance limits ... 39
B.5 Output current ripple limits ... 39
Annex C (informative) Symbols ... 40
Annex D (normative) Battery powered equipment ... 41
D.1 General ... 41
D.2 Additional emission requirements ... 41
D.3 Additional immunity requirements ... 41
Annex E (normative) Equipment containing radio devices ... 42
E.1 General ... 42
E.2 Additional emission requirements ... 42
E.3 Additional immunity requirements ... 42
Bibliography ... 43

Figure 1 – Examples of ports ... 11
Figure 2 – Test set-up 1 for arc welding equipment ... 14
Figure 3 – Test set-up 2 for portable arc welding equipment ... 15
Figure 4 – Top view of test set-up as shown in Figure 2 ... 16
Figure 5 – Overview of harmonic requirements for supply current I_{1max} up to 75 A ... 25
Figure 6 – Overview of flicker requirements ... 26

Table 1 – Mains terminal disturbance voltage limits, idle state ... 21
Table 2 – Mains terminal disturbance voltage limits, load conditions ... 22
Table 3 – Output current ripple limits for Class B arc welding power sources ... 23
Table 4 – Electromagnetic radiation disturbance – Idle state ... 24
Table 5 – Electromagnetic radiation disturbance – Loaded state ... 24
Table 6 – Immunity levels – Enclosure ... 28
Table 7 – Immunity levels – AC input power port ... 28
Table 8 – Immunity levels – Ports for process, signalling, measurement and control ... 29
~~Table B.1 – Mains terminal disturbance voltage limits, idle state ...~~
~~Table B.2 – Mains terminal disturbance voltage limits, load conditions ...~~
~~Table B.3 – Electromagnetic radiation disturbance limits, idle state ...~~
~~Table B.4 – Electromagnetic radiation disturbance limits, load conditions ...~~
~~Table B.5 – Maximum permissible harmonic current for equipment for non-professional use with input current $I_{1max} \leq 16$ A ...~~

IECNORM.COM : Click to view the full PDF of IEC 60974-10:2020 RLV

~~Table B.6 – Current emission limits for equipment with I_{1max} ≤ 75 A other than balanced three-phase equipment~~ .....

~~Table B.7 – Current emission limits for balanced three-phase equipment with I_{1max} ≤ 75 A~~ .....

~~Table B.8 – Current emission limits for balanced three-phase equipment with I_{1max} ≤ 75 A under specified conditions (a, b, c)~~ .....

~~Table B.9 – Current emission limits for balanced three-phase equipment with I_{1max} ≤ 75 A under specified conditions (d, e, f)~~ .....

~~Table B.10 – Limits for arc welding equipment with I_{1max} ≤ 75 A~~ .....

Table C.1 – Symbols to describe EMC properties 40

IECNORM.COM : Click to view the full PDF of IEC 60974-10:2020 RLV

INTERNATIONAL ELECTROTECHNICAL COMMISSION

ARC WELDING EQUIPMENT –

Part 10: Electromagnetic compatibility (EMC) requirements

FOREWORD

1) The International Electrotechnical Commission (IEC) is a worldwide organization for standardization comprising all national electrotechnical committees (IEC National Committees). The object of IEC is to promote international co-operation on all questions concerning standardization in the electrical and electronic fields. To this end and in addition to other activities, IEC publishes International Standards, Technical Specifications, Technical Reports, Publicly Available Specifications (PAS) and Guides (hereafter referred to as "IEC Publication(s)"). Their preparation is entrusted to technical committees; any IEC National Committee interested in the subject dealt with may participate in this preparatory work. International, governmental and non-governmental organizations liaising with the IEC also participate in this preparation. IEC collaborates closely with the International Organization for Standardization (ISO) in accordance with conditions determined by agreement between the two organizations.

2) The formal decisions or agreements of IEC on technical matters express, as nearly as possible, an international consensus of opinion on the relevant subjects since each technical committee has representation from all interested IEC National Committees.

3) IEC Publications have the form of recommendations for international use and are accepted by IEC National Committees in that sense. While all reasonable efforts are made to ensure that the technical content of IEC Publications is accurate, IEC cannot be held responsible for the way in which they are used or for any misinterpretation by any end user.

4) In order to promote international uniformity, IEC National Committees undertake to apply IEC Publications transparently to the maximum extent possible in their national and regional publications. Any divergence between any IEC Publication and the corresponding national or regional publication shall be clearly indicated in the latter.

5) IEC itself does not provide any attestation of conformity. Independent certification bodies provide conformity assessment services and, in some areas, access to IEC marks of conformity. IEC is not responsible for any services carried out by independent certification bodies.

6) All users should ensure that they have the latest edition of this publication.

7) No liability shall attach to IEC or its directors, employees, servants or agents including individual experts and members of its technical committees and IEC National Committees for any personal injury, property damage or other damage of any nature whatsoever, whether direct or indirect, or for costs (including legal fees) and expenses arising out of the publication, use of, or reliance upon, this IEC Publication or any other IEC Publications.

8) Attention is drawn to the Normative references cited in this publication. Use of the referenced publications is indispensable for the correct application of this publication.

9) Attention is drawn to the possibility that some of the elements of this IEC Publication may be the subject of patent rights. IEC shall not be held responsible for identifying any or all such patent rights.

This redline version of the official IEC Standard allows the user to identify the changes made to the previous edition. A vertical bar appears in the margin wherever a change has been made. Additions are in green text, deletions are in strikethrough red text.

IECNORM.COM : Click to view the full PDF of IEC 60974-10:2020 RLV

International Standard IEC 60974-10 has been prepared by IEC technical committee 26: Electric welding.

This fourth edition cancels and replaces the third edition published in 2014 and its Amendment 1:2015. This edition constitutes a technical revision.

This edition includes the following significant technical changes with respect to the previous edition:

a) updated normative references;

b) requirements for battery powered equipment;

c) requirements for equipment combined with radio transmitters/receivers.

The text of this standard is based on the following documents:

FDIS	Report on voting
26/695/FDIS	26/697/RVD

Full information on the voting for the approval of this standard can be found in the report on voting indicated in the above table.

This publication has been drafted in accordance with the ISO/IEC Directives, Part 2.

A list of all parts in the IEC 60974 series, published under the general title *Arc welding equipment*, can be found on the IEC web site.

The committee has decided that the contents of this publication will remain unchanged until the stability date indicated on the IEC web site under "http://webstore.iec.ch" in the data related to the specific publication. At this date, the publication will be

- reconfirmed,
- withdrawn,
- replaced by a revised edition, or
- amended.

IMPORTANT – The 'colour inside' logo on the cover page of this publication indicates that it contains colours which are considered to be useful for the correct understanding of its contents. Users should therefore print this document using a colour printer.

IECNORM.COM : Click to view the full PDF of IEC 60974-10:2020 RLV

ARC WELDING EQUIPMENT –

Part 10: Electromagnetic compatibility (EMC) requirements

1 Scope

~~This part of IEC 60974 specifies~~

~~a) applicable standards and test methods for radio-frequency (RF) emissions;~~

~~b) applicable standards and test methods for harmonic current emission, voltage fluctuations and flicker;~~

~~c) immunity requirements and test methods for continuous and transient, conducted and radiated disturbances including electrostatic discharges.~~

This part of IEC 60974 is applicable to equipment for arc welding and allied processes, including power sources and ancillary equipment, for example wire feeders, liquid cooling systems, arc striking and stabilizing devices and chargers for battery powered equipment.

NOTE 1 Allied processes are, for example, plasma cutting and arc stud welding.

NOTE 2 This document does not specify basic safety requirements for arc welding equipment such as protection against electric shock, unsafe operation, insulation coordination and related dielectric tests.

Arc welding equipment containing a radio receiver or transmitter is within the scope of this document.

The radiated emission requirements in this document are not intended to be applicable to the intentional transmissions from a radio transmitter as defined by the ITU nor to any spurious emissions related to these intentional transmitters.

This document specifies

a) applicable standards and test methods for radio-frequency (RF) emissions;

a) applicable standards and test methods for harmonic current emission, voltage fluctuations and flicker;

b) immunity requirements and test methods for continuous and transient, conducted and radiated disturbances including electrostatic discharges;

c) additional requirements for equipment powered by internal or external batteries (Annex D);

d) additional requirements for equipment containing radio frequency transmitters/receivers (Annex E).

Arc welding equipment type tested in accordance with, and which has met the requirements ~~of~~ set in, this document is considered to be in compliance for all applications.

2 Normative references

The following documents are referred to in the text in such a way that some or all of their content constitutes requirements of this document. For dated references, only the edition cited applies. For undated references, the latest edition of the referenced document (including any amendments) applies.

~~IEC 60050 (all parts), *International Electrotechnical Vocabulary (available at <http://www.electropedia.org>)*~~

IECNORM.COM : Click to view the full PDF of IEC 60974-10:2020 RLV

IEC 60974-1:2017, *Arc welding equipment – Part 1: Welding power sources*
IEC 60974-1:2017/AMD1:2019

IEC 60974-6:2015, *Arc welding equipment – Part 6: Limited duty equipment*

IEC 61000-3-2:~~2005~~2018, *Electromagnetic compatibility (EMC) – Part 3-2: Limits – Limits for harmonic current emissions (equipment input current ≤ 16 A per phase)*
~~Amendment 1:2008~~
~~Amendment 2:2009~~

IEC 61000-3-3:2013, *Electromagnetic compatibility (EMC) – Part 3-3: Limits – Limitation of voltage changes, voltage fluctuations and flicker in public low-voltage supply systems, for equipment with rated current ≤ 16 A per phase and not subject to conditional connection*
IEC 61000-3-3:2013/AMD1:2017

IEC 61000-3-11:~~2000~~2017, *Electromagnetic compatibility (EMC) – Part 3-11: Limits – Limitation of voltage changes, voltage fluctuations and flicker in public low-voltage supply systems – Equipment with rated current ≤ 75 A and subject to conditional connection*

IEC 61000-3-12:2011, *Electromagnetic compatibility (EMC) – Part 3-12: Limits for harmonic currents produced by equipment connected to public low-voltage systems with input current > 16 A and ~~≥~~ ≤ 75 A per phase*

IEC 61000-4-2:2008, *Electromagnetic compatibility (EMC) – Part 4-2: Testing and measurement techniques – Electrostatic discharge immunity test*

IEC 61000-4-3:2006, *Electromagnetic compatibility (EMC) – Part 4-3: Testing and measurement techniques – Radiated, radio-frequency, electromagnetic field immunity test*
IEC 61000-4-3:2006/AMD1:2007
IEC 61000-4-3:2006/AMD2:2010

IEC 61000-4-4:2012, *Electromagnetic compatibility (EMC) – Part 4-4: Testing and measurement techniques – Electrical fast transient/burst immunity test*

IEC 61000-4-5:2014, *Electromagnetic compatibility (EMC) – Part 4-5: Testing and measurement techniques – Surge immunity test*
IEC 61000-4-5:2014/AMD1:2017

IEC 61000-4-6:2013, *Electromagnetic compatibility (EMC) – Part 4-6: Testing and measurement techniques – Immunity to conducted disturbances, induced by radio-frequency fields*

IEC 61000-4-11:2004, *Electromagnetic compatibility (EMC) – Part 4-11: Testing and measurement techniques – Voltage dips, short interruptions and voltage variations immunity tests*
IEC 61000-4-11:2004/AMD1:2017

IEC 61000-4-34:2005, *Electromagnetic compatibility (EMC) – Part 4-34: Testing and measurement techniques – Voltage dips, short interruptions and voltage variations immunity tests for equipment with input current more than 16 A per phase*
IEC 61000-4-34:2005/AMD1:2009

IEC 61000-6-1:2016, *Electromagnetic compatibility (EMC) – Part 6-1: Generic standards – Immunity standard for residential, commercial and light-industrial environments*

IEC 61000-6-2:2016, *Electromagnetic compatibility (EMC) – Part 6-2: Generic standards – Immunity standard for industrial environments*

IECNORM.COM : Click to view the full PDF of IEC 60974-10:2020 RLV

IEC 61000-6-3:2006, *Electromagnetic compatibility (EMC) – Part 6-3: Generic standards – Emission standard for residential, commercial and light-industrial environments*
IEC 61000-6-3:2006/AMD1:2010

IEC 61000-6-4:2018, *Electromagnetic compatibility (EMC) – Part 6-4: Generic standards – Emission standard for industrial environments*

CISPR 11:~~2009~~2015, *Industrial, scientific and medical equipment – Radio-frequency disturbance characteristics – Limits and methods of measurement*~~[1]~~
~~Amendment 1:2010~~
CISPR 11:2015/AMD1:2016
CISPR 11:2015/AMD2:2019

CISPR 14-1:2016, *Electromagnetic compatibility – Requirements for household appliances, electric tools and similar apparatus – Part 1: Emission*

CISPR 16-1-1:2019, *Specification for radio disturbance and immunity measuring apparatus and methods – Part 1-1: Radio disturbance and immunity measuring apparatus – Measuring apparatus*

CISPR 16-1-2:2014, *Specification for radio disturbance and immunity measuring apparatus and methods – Part 1-2: Radio disturbance and immunity measuring apparatus –* ~~*Ancillary equipment – Conducted disturbances*~~ *Coupling devices for conducted disturbance measurements*
CISPR 16-1-2:2014/AMD1:2017

CISPR 16-1-4:2019, *Specification for radio disturbance and immunity measuring apparatus and methods – Part 1-4: Radio disturbance and immunity measuring apparatus – Antennas and test sites for radiated disturbance measurements*

3 Terms and definitions

For the purposes of this document, terms and definitions ~~given in IEC 60050-161 concerning EMC and the relevant phenomena, given in IEC 60050-851 on arc welding equipment and~~ in IEC 60974-1 as well as the following apply.

ISO and IEC maintain terminological databases for use in standardization at the following addresses:

- IEC Electropedia: available at http://www.electropedia.org/
- ISO Online browsing platform: available at http://www.iso.org/obp

3.1
click
disturbance which exceeds the limit of continuous disturbance no longer than 200 ms and which is separated from a subsequent disturbance by at least 200 ms

Note 1 to entry: Both intervals are related to the level of the limit of continuous disturbance.

Note 2 to entry: A click may contain a number of impulses, in which case the relevant time is that from the beginning of the first to the end of the last impulse.

[SOURCE: IEC 60050-851:2008, 851-15-13]

~~[1] There exists a consolidated edition 5.1 (2010) that includes Edition 5 and its Amendment 1.~~

IECNORM.COM : Click to view the full PDF of IEC 60974-10:2020 RLV

3.2
coupling network
electrical circuit for transferring energy from one circuit to another with a defined impedance

Note 1 to entry: Coupling and decoupling devices can be integrated into one box (coupling and decoupling network (CDN)) or they can be in separate networks.

[SOURCE:IEC 61000-4-6:2013, 3.7]

~~**3.3**~~
~~**EUT**~~
~~equipment under test~~

3.3
CDN
coupling/decoupling network
electrical circuit incorporating the functions of both the coupling and decoupling networks

[SOURCE:IEC 61000-4-6:2013, 3.8]

3.4
decoupling network
decoupling device
electrical circuit for preventing test signals applied to the equipment under test (EUT) from affecting other devices,equipment or systems that are not under test

[SOURCE:IEC 61000-4-6:2013, 3.9]

~~**3.4**~~
~~**idle state**~~
~~operating state in which the power is switched on and the welding circuit is not energized~~

~~Note 1 to entry: For some types of equipment there is no idle state, but an operating state preceding arc striking, when the welding circuit is energized.~~

~~Note 2 to entry: Idle state is different from standby mode, when the power is switched off.~~

3.5
FAR
fully-anechoic room
shielded enclosure, the internal surfaces of which are lined with radio-frequency-energy absorbing material (i.e. RF absorber) that absorbs electromagnetic energy in the frequency range of interest

[SOURCE: CISPR 11:2015/AMD1:2016, 3.20]

3.6
OATS
open-area test site
facility used for measurements of electromagnetic fields the intention for which is to simulate a semi-free-space environment over a specified frequency range that is used for radiated emission testing of products

Note 1 to entry: An OATS typically is located outdoors in an open area, and has an electrically-conducting ground plane.

[SOURCE: CISPR 11:2015/AMD1:2016, 3.21]

IECNORM.COM : Click to view the full PDF of IEC 60974-10:2020 RLV

3.7
port
particular interface of an equipment which couples this equipment with the external electromagnetic environment (IEC 60050-161:2018, 161-01-01) and through which the equipment is influenced by this environment

EXAMPLE Examples of ports of interest are shown in Figure 1. The enclosure port is the physical boundary of the apparatus (e.g. enclosure). The enclosure port provides for radiated and electrostatic discharge (IEC 60050-161:2018, 161-01-22) energy transfer, whereas the other ports provide for conducted energy transfer.

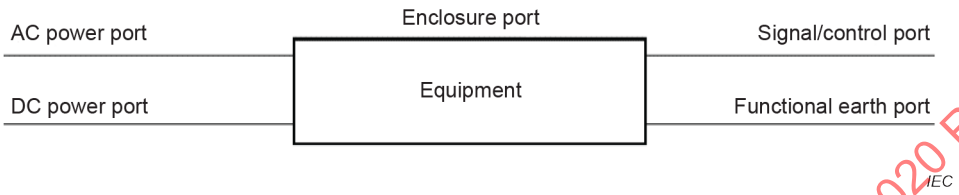

Figure 1 – Examples of ports

Note 1 to entry: Ports in the subject area of electromagnetic compatibility are specific cases of the port defined in IEC 60050-131:2002, 131-12-60.

[SOURCE: IEC Guide 107:2014, 3.1.12, modified – The presentation of the term and the wording of the definition have been revised for compatibility with IEC 60050 (all parts).]

3.8
portable, adj
capable to be carried by one person

Note 1 to entry: Portability is typically specified by the equipment manufacturer based on the intended use, the equipment design and/or local regulation.

[SOURCE: IEC 60050-151:2001, 151-16-47, modified – The note to entry has been entirely redrafted.]

3.9
SAC
semi-anechoic chamber
shielded enclosure, in which five of the six internal surfaces are lined with radio-frequency energy absorbing material (i.e. RF absorber) that absorbs electromagnetic energy in the frequency range of interest, and the bottom horizontal surface is a conducting ground plane for use with OATS test set-ups

[SOURCE: CISPR 11:2015/AMD1:2016, 3.22]

3.10
small equipment
equipment, either positioned on a table top or standing on the floor which, including its cables fits in an imaginary cylindrical test volume of 1,2 m in diameter and 1,5 m height (~~above the~~ to ground plane)

[SOURCE: ~~CISPR 11:2009, Amendment 1:2010, 3.10~~ CISPR 11:2015, 3.17, modified – Replacement of the term "small size equipment" by "small equipment"]

3.11
wired network port
PORT for the connection of voice, data and signalling transfers intended to interconnect widely-dispersed systems by direct connection to a single-user or multi-user communication network

IECNORM.COM : Click to view the full PDF of IEC 60974-10:2020 RLV

Note 1 to entry: Examples of these include CATV, PSTN, ISDN, xDSL, LAN and similar networks.

Note 2 to entry: These PORTS may support screened or unscreened cables and may also carry AC or DC power where this is an integral part of the telecommunication specification.

[SOURCE: CISPR 32:2015, 3.1.32]

4 General test requirements

4.1 Test conditions

Tests shall be carried out on completely assembled equipment representative of the series production. Tests shall be performed within the specified operating conditions given in IEC 60974-1:2017 and IEC 60974-1:2017/AMD1:2019 or IEC 60974-6:2015, and at the rated supply voltage and frequency. Results obtained for RF emission and immunity at 50 Hz are valid for the same model operating at 60 Hz and vice versa.

Where this document gives options for testing particular requirements with a choice of test methods, compliance can be shown against any of the test methods, using the specified limits with the restrictions provided in the relevant tables.

Identical units may be used for testing in parallel. In this case, this information shall be recorded in the test report.

4.2 Measuring instruments

The measuring equipment shall comply with the requirements of CISPR 16-1-1:2019 and the standards referred to in ~~Tables 1, 2 and 3~~ Table 6, Table 7 and Table 8 as applicable.

4.3 Artificial mains network

Measurement of the mains terminal disturbance voltage shall be made using an artificial mains network, if commercially available, consisting of 50 Ω/50 µH or 50 Ω/50 µH + 5 Ω V-network as specified in CISPR 16-1-2:2014 and CISPR 16-1-2:2014/AMD1:2017.

The artificial network is required to provide a defined impedance at RF across the mains supply at the point of measurement and also to provide for isolation of the equipment under test from ambient noise on the power lines.

4.4 Voltage probe

A voltage probe as specified in CISPR 16-1-2:2014 and CISPR 16-1-2:2014/AMD1:2017 shall be used when the artificial mains network cannot be used. The probe is connected sequentially between each line and the reference earth. The probe shall consist of a blocking capacitor and a resistor such that the total resistance between the line and earth is at least 1 500 Ω. The effect on the accuracy of measurement of the capacitor or any other device which may be used to protect the measuring receiver against dangerous currents shall be either less than 1 dB or allowed for in calibration.

4.5 Antennas

In the frequency range from 30 MHz to ~~1~~ 6 GHz, the antenna(s) used shall be as specified in CISPR 16-1-4:2019.

Measurements shall be made for both horizontal and vertical polarization. ~~The nearest point of the antenna(s) to the ground shall be not less than 0,2 m.~~

On an OATS or in a SAC, the nearest point of the antenna(s) to the ground shall be not less than 0,25 m.

IECNORM.COM : Click to view the full PDF of IEC 60974-10:2020 RLV

For measurements in a FAR, the antenna height is fixed at the geometrical middle height of the validated test volume.

4.6 ~~Load~~ Coupling/decoupling network (CDN)

If a shielded chamber is required and the load is situated outside the shielded chamber, a load-decoupling network connected to the outside load via suitable RF filters shall be used inside the chamber. A 150 Ω CDN AF 2, as specified in IEC 61000-4-6:2013, suitable for the respective load current and voltage, shall be used. The RF-port of the CDN shall be terminated with 50 Ω.

Any suitable coupling devices specified in CISPR 16-1-2:2014 and CISPR 16-1-2:2014/AMD1:2017 may be used for the conducted emission assessment of signal, control or measurement ports.

5 Test set-up for emission and immunity

5.1 General

Emission and immunity testing of equipment that is not PORTABLE shall be carried out on equipment configured in accordance with Figure 2. For PORTABLE equipment, either the test set-up given in Figure 2 or the test set-up given in Figure 3 shall be used. Arc welding equipment tested in one of these configurations shall be considered to have met the necessary requirements of this document.

~~In any situation where it is necessary to re-test the equipment to show compliance with this standard the test setup originally chosen shall be used in order to guarantee consistency of the results, unless it is agreed by the manufacturer to do otherwise.~~

For the measurement of the output current ripple, there are no specific requirements for the equipment configuration.

For RF emission, EM field immunity, common mode immunity, and fast transient immunity tests the following dimensions apply:

- in Figure 2, a shall be 1 m;
- in Figure 2 and Figure 3, b shall be 0,4 m or less;
- in Figure 3, h shall be 0,8 m;
- In Figure 3, the horizontal distance c between the EUT and the convential load shall be 1 m or less.

Dimensions a, b and h are undefined for all other tests.

The tolerance for the dimensions a and h is ± 0,05 m.

IECNORM.COM : Click to view the full PDF of IEC 60974-10:2020 RLV

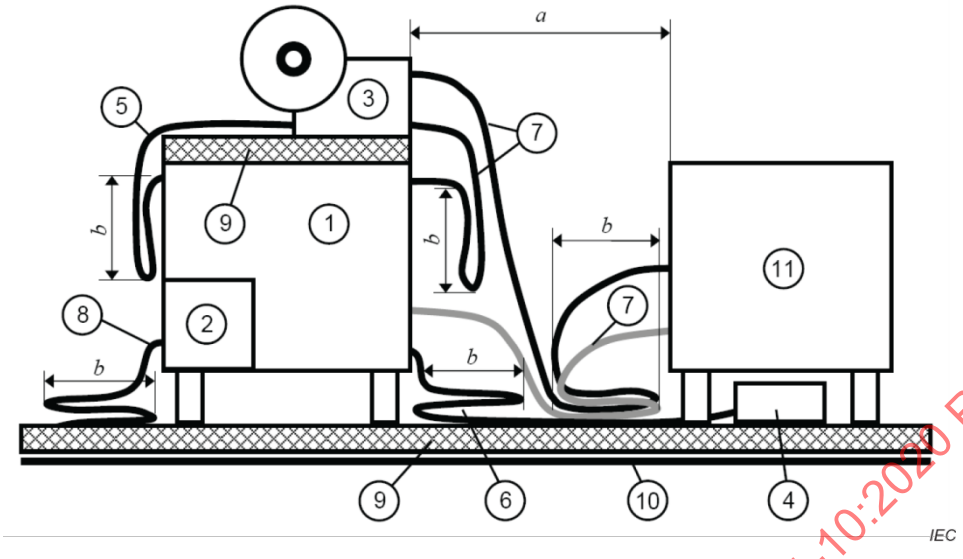

Key

1	Welding power source	7	Welding cable (bundled)
2	Liquid cooling system	8	Input supply cable (bundled)
3	Wire feeder	9	Insulation
4	Remote control	10	Reference ground plane
5	Interconnection cable (bundled)	11	Conventional load ~~or load decoupling network~~
6	Remote control cable (bundled)		

a Distance between power source and load or load decoupling network

b Cable bundle length

NOTE 1 Items 2, 3, and 4 are ancillary equipment, as applicable, and are typically positioned as specified by the equipment manufacturer.

NOTE 2 Insulation (item 9) is placed between items 1 and 3 if specified by the manufacturer.

Figure 2 – Test set-up 1 for arc welding equipment

If, due to the design of the arc welding equipment, these tests cannot be carried out as described, the manufacturer's recommendations (for example, temporary bypassing or disablement of control circuits) should be followed in order to match these test objectives. Any temporary changes to the arc welding equipment shall be documented.

If ancillary equipment can be connected to the welding power source, then the welding power source shall be tested with the minimum configuration of ancillary equipment necessary to exercise the ports. If the welding power source has a large number of similar PORTS or PORTS with many similar connections, then a sufficient number shall be selected to simulate actual operating conditions and to ensure that all the different types of termination are covered.

For mains terminal voltage disturbance tests the welding power source shall be connected to the electricity supply using the V-network specified in 4.3 whenever possible. The V-network shall be located so that its closest surface is no less than 0,8 m from the nearest boundary of the equipment under test. The input cable shall have a minimum length of 2 m.

IECNORM.COM : Click to view the full PDF of IEC 60974-10:2020 RLV

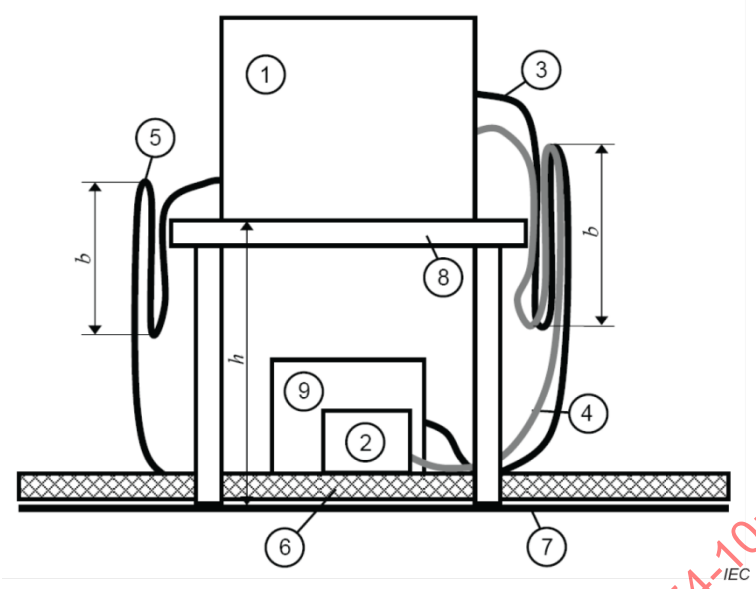

Key

1	Arc welding equipment	6	Insulation
2	Remote control (under the table)	7	Reference ground plane
3	Welding cable (bundled)	8	Non-conductive table
4	Remote control cable (bundled)	9	Conventional load ~~or load decoupling network~~; The load may be placed under or beside the table (under the table)
5	Input supply cable (bundled)		

b Cable bundle length

h Non-conductive table height

NOTE Item 2 is ancillary equipment, as applicable.

Figure 3 – Test set-up 2 for portable arc welding equipment

IECNORM.COM : Click to view the full PDF of IEC 60974-10:2020 RLV

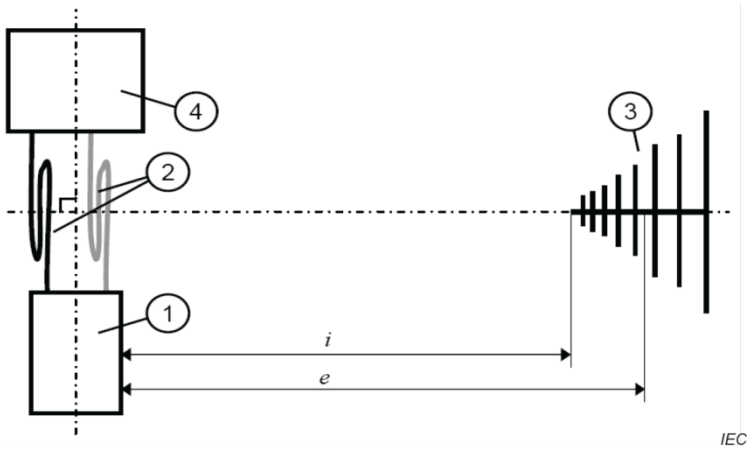

Key

1	Arc welding equipment	3	Test antenna (horizontal polarization shown)
2	Welding cables (bundled)	4	Conventional load or load decoupling network

e Separation distance between the equipment under test and the radiation center of the antenna

i Distance between the equipment under test and nearest point of the antenna

Figure 4 – Top view of test set-up as shown in Figure 2

The welding power source shall be connected to the conventional load by welding cables of suitable cross-section for the welding current, or the appropriate torch or electrode holder with an adapter. The welding cables shall have a minimum length of 2 m.

If a load situated outside the shielded chamber is used, a load-decoupling network as defined in 4.6 shall be placed inside the shielded chamber. The load-decoupling network shall be terminated to the reference ground and connected to the outside load via suitable filters.

For RF emission tests using the test set-up given in Figure 2, the welding power source shall be insulated by an insulating mat (or blocks) not greater than 12 mm thick or insulated by its own under-gear if appropriate.

For electromagnetic radiation disturbance and EM field immunity tests using the test set-up as given in Figure 2, the welding power source and conventional load (or, if applicable, the load-decoupling network) shall be at one stationary position with respect to the test antenna as shown in Figure 4. The separation distance *e* in Figure 4 is defined in ~~Clause 6 of CISPR 11:2009~~ 8.3 of CISPR 11:2015 and CISPR 11:2015/AMD1:2016. The separation distance *i* in Figure 4 is defined in IEC 61000-4-3:2006, IEC 61000-4-3:2006/AMD1:2007 and IEC 61000-4-3:2006/AMD2:2010.

The cables shall be allowed to fall naturally to the ground plane. Excess cable length shall be folded to form separate bundles not exceeding 0,4 m in length, as far as practicable.

Specific test set-up geometries for immunity tests can be found in the basic standards referenced in ~~Tables 1, 2 and 3~~ Table 6, Table 7 and Table 8.

The configuration of the equipment under test shall be noted in the test report.

5.2 Load

During the tests, the arc welding operation is simulated by loading the equipment with a conventional load as specified in IEC 60974-1:2017 and IEC 60974-1:2017/AMD1:2019. For RF emission tests that do not use a CDN, the conventional load shall be insulated by an

IECNORM.COM : Click to view the full PDF of IEC 60974-10:2020 RLV

insulating mat (or blocks) not greater than 12 mm thick or insulated by its own under-gear if appropriate.

For the measurement of the output current ripple, the inductance of the load including welding cables at the fundamental frequency shall be less than 10 µH per 100 mΩ total resistance.

5.3 Ancillary equipment

5.3.1 General requirements

Ancillary equipment shall be tested in conjunction with a welding power source. It shall be connected, installed and configured as recommended by the manufacturer.

Specific requirements for the operation of ancillary equipment are given below.

5.3.2 Wire feeders

Wire feeders shall be positioned on~~/by~~ or near a welding power source as designed. Wire feeders, which can be located both inside or outside the welding power source enclosure, shall be placed outside. For RF emission tests, wire feeders designed to be placed on the floor shall be insulated from it, by an insulating mat (or blocks) not greater than 12 mm thick or insulated by its own under-gear, if appropriate.

The welding cable connecting the wire feeder to the welding power source shall be 2 m in length or longer, if required, to make the connection and be of suitable current rating. If a welding cable in excess of 2 m is provided by the manufacturer, the excess cable length shall be folded to form a bundle not exceeding 0,4 m in length, as far as practicable. A welding cable connection less than 2 m long shall be permitted if this is supplied with the equipment.

The interconnection cable(s) between the wire feeder and the welding power source shall be of the type and length recommended by the manufacturer. Excess cable length shall be folded to form a bundle not exceeding 0,4 m in length, as far as practicable.

A welding torch, as recommended by the manufacturer, may be used instead of a welding cable to make the connection from the wire feeder to the conventional load.

5.3.3 Remote controls

If a welding power source is capable of operating with a remote control, it shall be tested with the remote control connected, which is expected to give the highest emissions and/or lowest immunity. The remote control shall be placed on, and insulated from, the ground plane beside the load, where possible. For RF emission tests, the insulation shall not be greater than 12 mm thick. Remote controls designed to be attached to the arc welding equipment during use shall be placed as intended. For wireless remote controls, see Annex E.

Excess cable length shall be folded to form a bundle not exceeding 0,4 m in length, as far as practicable.

Complex controls that can be used independently from a dedicated power source may be tested in conjunction with the power source or as a stand-alone unit, as specified by the manufacturer.

5.3.4 Arc striking and stabilizing devices

Arc striking and stabilizing devices shall be disabled during all tests other than RF emission tests to protect test equipment. For RF emission tests, measurements shall be started 5 s after the equipment is in operation.

IECNORM.COM : Click to view the full PDF of IEC 60974-10:2020 RLV

5.3.5 Liquid cooling systems

Liquid cooling systems shall be positioned on~~/by~~ or near a welding power source as designed. Liquid cooling systems, which can be located both inside or outside the welding power source enclosure, shall be placed outside. For RF emission tests, liquid cooling systems designed to be placed on the floor shall be insulated from it, by an insulating mat (or blocks) not greater than 12 mm thick or insulated by its own under-gear, if appropriate.

The inlet and outlet may be connected by a hose, as recommended by the manufacturer, to allow the flow of cooling liquid.

6 Emission tests

6.1 Classification for RF emission tests

6.1.1 Class A equipment

~~Class A equipment is intended for use in locations other than residential locations where the electrical power is provided by the public low-voltage supply system.~~

Class A equipment is equipment suitable for use in all locations other than those allocated in residential environments and those directly connected to a low-voltage power supply network which supplies buildings used for domestic purposes.

Class A equipment shall meet Class A limits in accordance with 6.3.

Arc striking and stabilizing devices and arc stud welding equipment shall be classified as Class A equipment.

6.1.2 Class B equipment

Class B equipment is suitable for use in all locations, including residential locations where the electrical power is provided by the public low-voltage supply system.

Class B equipment shall meet Class B limits in accordance with 6.3.

6.2 Test conditions

6.2.1 Welding power source

6.2.1.1 Test conditions for RF emission tests

The welding power source shall be tested at the conventional load voltages referenced in 6.2.2 under the following output conditions:

a) at rated minimum welding current;

b) at rated welding current at 100 % duty cycle. If no rated current is specified for a 100 % duty cycle, the test shall be carried out at 50 % of I_{2max}.

Additionally, if there is an idle state, the welding power source shall be tested with the cables disconnected at the load.

If the supply current is greater than 25 A at any of the output conditions given above, the output may be reduced to give a supply current of 25 A. However, if a supply current of 25 A or less cannot be achieved, the voltage probe, as specified in 4.4, may be used for tests in accordance with 6.3.2 as an alternative to an artificial mains network.

IECNORM.COM : Click to view the full PDF of IEC 60974-10:2020 RLV

Welding power sources ~~capable of operating in both a.c. and d.c. modes~~ shall be tested in ~~both~~ all operating modes.

NOTE Typical examples for operating modes are AC, DC or pulsed DC.

Multi-process welding power sources shall be tested with the conventional load which gives the highest load voltage for the set current. If a welding power source contains more than one output circuit (for example, plasma cutting and manual arc welding), each circuit shall be tested separately.

For power sources with an external wire feeder, only the MIG configuration shall be tested with the MIG conventional load voltage. As an alternative, the MAG configuration can also be used.

6.2.1.2 Test conditions for harmonics

Welding power sources within the scope of IEC 60974-1:2017 and IEC 60974-1:2017/AMD1:2019 shall be tested at the conventional load voltage according to the process as given in 6.2.2 at maximum rated welding current at the rated duty cycle.

The arithmetic average value of 1,5 s smoothed RMS supply current values (I_{ref} as per IEC 61000-3-12:2011) shall be measured when the welding power source is delivering its maximum rated welding current I_{2max}.

For welding equipment within the scope of IEC 60974-1:2017 and IEC 60974-1:2017/AMD1:2019 with a rated maximum supply current below 16 A, the reference current I_{ref} for the definition of limits shall be 16 A.

The maximum and arithmetic average values of 1,5 s smoothed RMS harmonic current values in each discrete Fourier transform (DFT) time window shall be determined over one full thermal cycle of 10 min including the idle state period.

NOTE 1 An idle state period of more than 10 % is not a stand-by mode as defined in IEC 61000-3-12:2011, but an operational mode of the welding equipment within its full thermal cycle.

Welding power sources ~~capable of operating in both a.c. and d.c. modes~~ shall be tested in ~~both~~ all modes.

NOTE 2 Typical examples for operating modes are AC, DC or pulsed DC.

Multi-process welding power sources shall be tested with the conventional load which gives the highest conventional load voltage for the set current.

Test conditions for welding power sources within the scope of IEC 60974-6:2015 are given in IEC 61000-3-2:2018.

6.2.1.3 Test conditions for voltage fluctuations and flicker

Test conditions for welding power sources are given in IEC 61000-3-3:2013 and IEC 61000-3-3:2013/AMD1:2017.

NOTE 2 IEC 61000-3-3:2013, Clause A.15 is applicable to equipment with I_{1max} > 16 A.

6.2.1.4 Test conditions for output current ripple

The welding power source shall be tested at the conventional load voltages referenced in 6.2.2 at rated welding current at 100 % duty cycle. If no rated current is specified for a 100 % duty cycle, the test shall be carried out at 50 % of I_{2max}.

IECNORM.COM : Click to view the full PDF of IEC 60974-10:2020 RLV

The current ripple shall be recorded in the time domain.

6.2.2 Load voltages

Conventional load voltages are given in IEC 60974-1:2017 and IEC 60974-1:2017/AMD1:2019 or IEC 60974-6:2015.

6.2.3 Wire feeders

Wire feeders shall be tested at 50 % of the maximum wire feed speed setting, where possible. Pre-programmed and synergic wire feeders shall be tested according to the output setting of the welding power source.

During this test, pressure shall be removed from the drive rolls of the wire feeder and the welding power source shall be loaded as given in 6.2.1.1.

6.2.4 Ancillary equipment

Other ancillary equipment shall be tested according to the manufacturer's recommendations.

6.3 Emission limits

6.3.1 General

Emission limits are designed to reduce the probability of interference but will not in all cases eliminate interference, for example, when the receiving apparatus is in close proximity or has a high degree of sensitivity.

The ability of arc welding equipment to work in a compatible manner with other radio and electronic systems is greatly influenced by the manner in which it is installed and used. For this reason a code of practice is appended to this document (see Annex A), and it is recommended that the arc welding equipment be installed and used in accordance with this code of practice if electromagnetic compatibility is to be achieved.

NOTE The origins of the limit values in this document are summarized in Annex B.

6.3.2 Mains terminal disturbance voltage

6.3.2.1 Idle state

~~The mains terminal disturbance voltage limits for Class A arc welding equipment in idle state, regardless of the rated input power, are given in Table 2 of CISPR 11:2009 in the column for a rated input power less than or equal to 20 kVA.~~

~~The mains terminal disturbance voltage limits for Class B arc welding equipment in idle state are given in Table 3 of CISPR 11:2009.~~

The mains terminal disturbance voltage limits for Class A and Class B arc welding equipment in idle state, are given in Table 1. The appropriate set of limits shall be selected in accordance with the maximum rated input power of the equipment. If the rated input power is not given on the rating plate, it is calculated using the rated maximum supply current I_{1max} and the rated input voltage U_1.

The EUT shall meet either both the average and the quasi-peak limits using corresponding detectors or the average limit when using a quasi-peak detector.

IECNORM.COM : Click to view the full PDF of IEC 60974-10:2020 RLV

Table 1 – Mains terminal disturbance voltage limits, idle state

Frequency range	Class B		Class A maximum rated input power ≤ 20 kVA		Class A maximum rated input power > 20 kVA [a]		Class A maximum rated input power > 75 kVA [b]	
MHz	dBμV		dBμV		dBμV		dBμV	
	Quasi-peak	Average	Quasi-peak	Average	Quasi-peak	Average	Quasi-peak	Average
0,15 to 0,50	66 Decreasing linearly with logarithm of frequency to 56	56 46	79	66	100	90	130	120
0,50 to 5	56	46	73	60	86	76	125	115
5 to 30	60	50	73	60	90 Decreasing linearly with logarithm of frequency to 73	80 60	115	105

At the transition frequency, the more stringent limit shall apply.

[a] These limits apply to equipment with a rated power > 20 kVA and intended to be connected to a dedicated power transformer or generator, and which is not connected to low voltage (LV) overhead power lines. For equipment not intended to be connected to a user specific power transformer the limits for ≤ 20 kV A apply. The manufacturer and/or supplier shall provide information on installation measures that can be used to reduce emissions from the installed equipment. In particular it shall be indicated that this equipment is intended to be connected to a dedicated power transformer or generator and not to LV overhead power lines.

[b] These limits apply only to high power electronic systems and equipment with a rated power greater than 75 kVA when intended to be installed as follows:

– the installation is supplied from a dedicated power transformer or generator, and which is not connected to low voltage (LV) overhead power lines,

– the installation is physically separated from residential environments by a distance greater than 30 m or by a structure which acts as a barrier to radiated phenomena,

– the manufacturer and/or supplier shall indicate that this equipment meets the disturbance voltage limits for high power electronic systems and equipment of rated input power > 75 kVA and provide information on installation measures to be applied by the installer. In particular, it shall be indicated that this equipment is intended to be used in an installation which is powered by a dedicated power transformer or generator and not by LV overhead power lines.

IECNORM.COM : Click to view the full PDF of IEC 60974-10:2020 RLV

6.3.2.2 Loaded

The mains terminal disturbance voltage limits for Class A and Class B arc welding equipment are ~~the Group 2 limits~~ given in ~~Table 6 of CISPR 11:2009~~ Table 2. The appropriate set of limits shall be selected in accordance with the maximum rated input power of the equipment. If the rated input power is not given on the rating plate, it is calculated using the rated maximum supply current I_{1max} and the rated input voltage U_1.

~~The mains terminal disturbance voltage limits for Class B arc welding equipment are the Group 2 limits given in Table 7 of CISPR 11:2009.~~

Table 2 – Mains terminal disturbance voltage limits, load conditions

Frequency range MHz	Class B dBμV		Class A maximum rated input power ≤ 75 kVA [a] dBμV		Class A maximum rated input power > 75 kVA [a, b] dBμV	
	Quasi-peak	Average	Quasi-peak	Average	Quasi-peak	Average
0,15 to 0,50	66 Decreasing linearly with logarithm of frequency to 56	56 46	100	90	130	120
0,50 to 5	56	46	86	76	125	115
5 to 30	60	50	90 Decreasing linearly with logarithm of frequency to 73	80 60	115	105

At the transition frequency, the more stringent limit shall apply.

[a] The maximum rated input power is calculated using the rated maximum supply current I_{1max}.

[b] The manufacturer and/or supplier shall provide information on installation measures that can be used to reduce emissions from the installed equipment.

The EUT shall meet either both the average and the quasi-peak limits using corresponding detectors or the average limit when using a quasi-peak detector.

For Class A equipment impulse noise (clicks) which occurs less than 5 times per minute is not considered.

For Class B equipment impulse noise (clicks) which occurs less than 0,2 times per minute a relaxation of the limits of 44 dB is allowed.

For clicks appearing between 0,2 times and 30 times per minute, a relaxation of the limits of 20 log (30/N) dB is allowed (where N is the number of clicks per minute). Criteria for separated clicks can be found in CISPR 14-1:2016.

6.3.3 Conducted emissions at signal, control and measurement ports

Class A equipment shall comply with the limits in Table 5 of IEC 61000-6-4:2018.

Class B equipment shall comply with the limits for the telecommunications/network ports in Table 4 of IEC 61000-6-3:2006/AMD1:2010.

These requirements apply only to PORTS that connect the welding system to external equipment (e.g. wired network ports).

These requirements do not apply to PORTS designed exclusively for interconnection of equipment within the welding system (e.g. wire feeders, welding torches, gas consoles, other power sources, remote controls).

6.3.4 Output current ripple

The output current ripple of Class B arc welding power sources shall comply with the limits given in Table 3.

IECNORM.COM : Click to view the full PDF of IEC 60974-10:2020 RLV

NOTE The permissible peak-peak value is selected based on the fundamental frequency of the output current ripple. Compliance with this value at the fundamental frequency, which can be below the frequency range where limits for the magnetic field strength are defined, ensures compliance of all spectral components.

Table 3 – Output current ripple limits for Class B arc welding power sources

Frequency range MHz	Current ripple amplitude in time domain dBA[a] peak-peak
0,01 to 0,150	55,6 Decreasing linearly with logarithm of frequency to 8,6
0,150 to 30	8,6 Decreasing linearly with logarithm of frequency to -27,4

a dBA is a logarithmic unit where 0 dBA represents a current of 1 A.

6.3.5 Electromagnetic radiation disturbance

6.3.5.1 Idle state

The electromagnetic radiation disturbance limits for Class A and Class B arc welding equipment in idle state~~, regardless of the rated input power, are given in Table 4 of CISPR 11:2009 in the columns for a rated input power less than or equal to 20 kVA~~ are given in Table 4.

~~The electromagnetic radiation disturbance limits for Class B arc welding equipment are given in Table 5 of CISPR 11:2009.~~

IECNORM.COM : Click to view the full PDF of IEC 60974-10:2020 RLV

Table 4 – Electromagnetic radiation disturbance – Idle state

Frequency range MHz	Class B Quasi-peak dBμV/m			Class A Quasi-peak dBμV/m		
	OATS or SAC		FAR [b]	OATS or SAC		FAR [b]
	10 m measuring distance	3 m measuring distance [a]		10 m measuring distance	3 m measuring distance [a]	
30 to 230	30	40	42 to 35	40	50	52 to 45
230 to 1 000	37	47	42	47	57	52

On an OATS or in a SAC, class A equipment can be measured at a nominal distance of 3 m, 10 m or 30 m. In case of measurements at a separation distance of 30 m, an inverse proportionality factor of 20 dB per decade shall be used to normalize the measured data to the specified distance for determining compliance.

At the transition frequency, the more stringent limit shall apply. In the frequency range 30 MHz to 230 MHz, the limit for measurements in the FAR decreases linearly with the logarithm of frequency.

A 20 dB relaxation applies to Class A equipment with a rated power of > 20 kVA and intended to be used at locations where there is a distance greater than 30 m between the equipment and third party sensitive radio communications. The manufacturer shall indicate in the technical documentation that this equipment is intended to be used at locations where the separation distance to third party sensitive radio services is > 30 m. If these conditions are not met, then the relaxation does not apply.

[a] The limits specified for the 3 m separation distance apply only to small equipment meeting the size criterion defined in 3.10.

[b] The table-top equipment shall fit into the test volume of the FAR.

6.3.5.2 Loaded

The electromagnetic radiation disturbance limits for Class A and Class B arc welding equipment are the limits given in ~~Table 10 of CISPR 11:2009~~ Table 5.

~~The electromagnetic radiation disturbance limits for Class B arc welding equipment in the frequency band 30 MHz to 1 000 MHz are the Group 2 limits given in Table 11 of CISPR 11:2009.~~

~~The 20 dB relaxations in the frequency ranges 80,872 MHz to 81,848 MHz and 134,786 MHz to 136,414 MHz are not applicable to arc welding equipment.~~

Table 5 – Electromagnetic radiation disturbance – Loaded state

Frequency range MHz	Class B Quasi-peak dBμV/m			Class A Quasi-peak dBμV/m		
	OATS or SAC		FAR [b]	OATS or SAC		FAR [b]
	10 m measuring distance	3 m measuring distance [a]		10 m measuring distance	3 m measuring distance [a]	
30	30	40	42	80	90	102
> 30 to 80,872			42 to 39	Decreasing linearly with logarithm of frequency to		
80,872 to 81,848			39			
81,848 to 134,786			39 to 37			
134,786 to 136,414			37			

IECNORM.COM : Click to view the full PDF of IEC 60974-10:2020 RLV

136,414 to ≤ 230			37 to 35	60	70	75
> 230 to 1 000	37	47	42	60	70	75
On an OATS or in a SAC, Class A equipment can be measured at a nominal distance of 3 m, 10 m or 30 m. In case of measurements at a separation distance of 30 m, an inverse proportionality factor of 20 dB per decade shall be used to normalize the measured data to the specified distance for determining compliance.						
[a] The limits specified for the 3 m separation distance apply only to small equipment meeting the size criterion defined in 3.10. [b] The table-top equipment shall fit into the test volume of the FAR.						

6.3.6 Harmonics, voltage fluctuations and flicker

The limits for

a) harmonic current emissions are given in IEC 61000-3-2:2018 and IEC 61000-3-12:2011,

b) voltage fluctuations and flicker are given in IEC 61000-3-3:2013 and IEC 61000-3-3:2013/AMD1:2017 and IEC 61000-3-11:2017,

and are applicable to arc welding equipment with a supply current I_{1max} up to 75 A, as given in Figure 5 and Figure 6.

NOTE 1 IEC TS 61000-3-4:1998 can be used to guide the parties concerned by the installation of arc welding equipment with an supply current I_{1max} above 75 A in a low-voltage network.

NOTE 2 IEC 61000-3-3:2013, Clause A.15, is applicable to equipment with I_{1max} > 16 A.

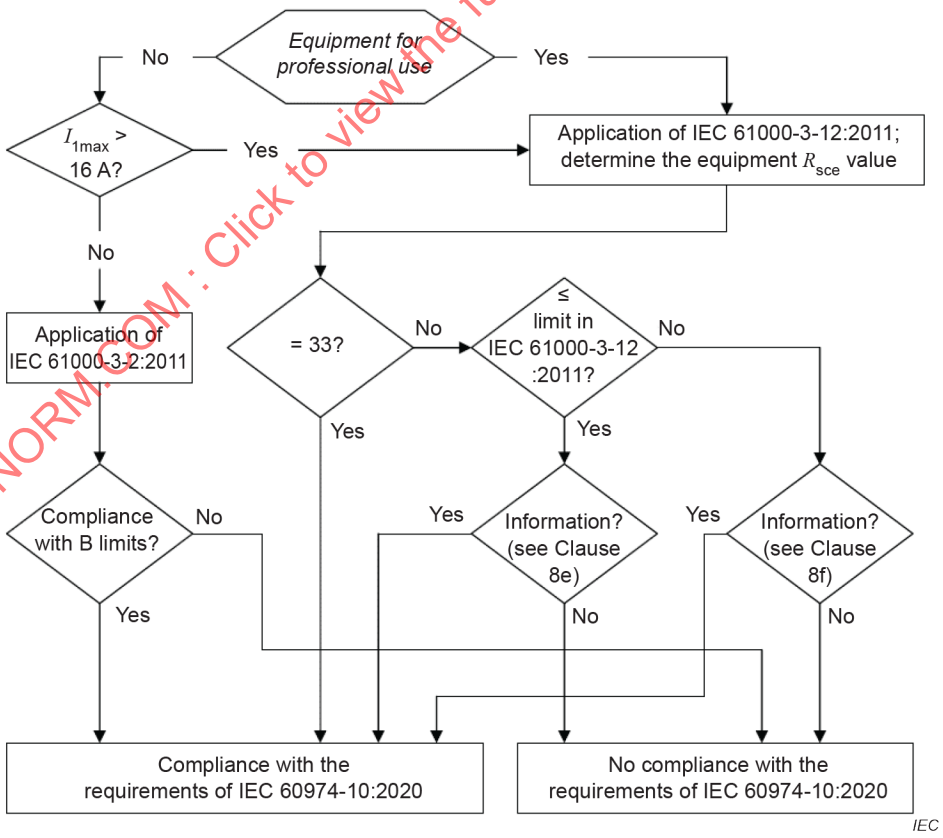

Figure 5 – Overview of harmonic requirements for supply current I_{1max} up to 75 A

IECNORM.COM : Click to view the full PDF of IEC 60974-10:2020 RLV

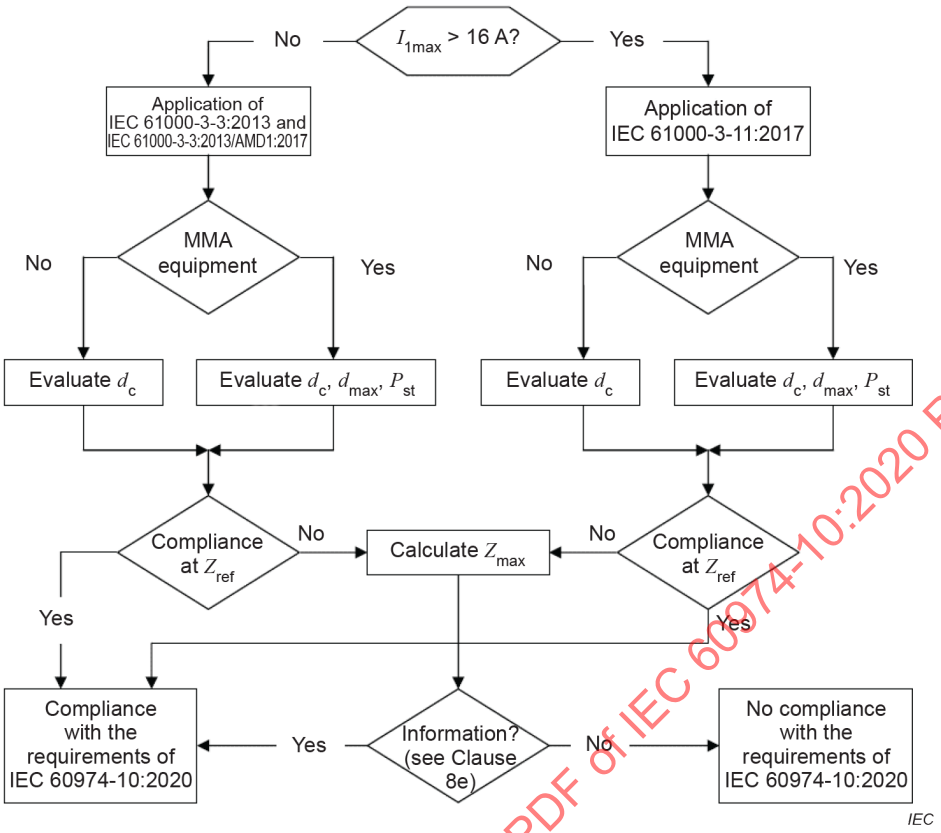

Figure 6 – Overview of flicker requirements

IECNORM.COM : Click to view the full PDF of IEC 60974-10:2020 RLV

7 Immunity tests

7.1 Classification for immunity tests

7.1.1 Applicability of tests

Arc welding equipment covered by this document is sub-divided into categories for the purpose of immunity requirements as given below. Category 1 arc welding equipment is considered to meet the necessary immunity requirements without testing. Category 2 arc welding equipment shall fulfil the requirements of 7.4.

7.1.2 Category 1 equipment

Category 1 equipment includes arc welding equipment not containing electronic control circuitry, for example, transformers, transformer rectifiers, passive remote controls, liquid cooling systems, CO_2-heaters and non-electronic wire feeders.

Electric circuits consisting of passive components such as inductors, RF suppression networks, mains frequency transformers, rectifiers, diodes and resistors are not considered to be electronic control circuitry.

7.1.3 Category 2 equipment

Category 2 equipment includes all arc welding equipment excluded from Category 1 above.

7.2 Test conditions

Welding power sources shall be tested during no-load and loaded operation at the welding current corresponding to a 100 % duty cycle, when delivering current into a conventional load in accordance with 6.2.2.

If the supply current is greater than 25 A at any of the output conditions given above, the output may be reduced to give a supply current of 25 A.

Compliance shall be checked by measuring the no-load voltage (for the no-load test) and the mean value of the welding current (for the loaded operation test).

Wire feeders shall be tested at 50 % of the maximum setting. The speed of the wire feeder shall be measured using a tacho-generator on a drive roll or by using other equivalent means.

NOTE To carry out this test, pressure is removed from the drive rolls.

7.3 Immunity performance criteria

7.3.1 Performance criterion A

The arc welding equipment shall continue to operate as intended. A variation in welding current, wire feed speed and travel speed of ±10 % of the setting is permitted~~, unless the manufacturer states otherwise~~. All controls shall continue to function and, in particular, it shall be possible to terminate the welding current using the normal switch provided, for example, the switch on a metal inert/active gas welding torch or foot control. No loss of stored data is permitted. After the test the output shall return to the original setting. Under no circumstances shall the no-load voltage exceed those values given in IEC 60974-1:2017 and IEC 60974-1:2017/AMD1:2019.

7.3.2 Performance criterion B

A variation in welding current, wire feed speed and travel speed of $^{+50}_{-100}$ % is permitted (in practice this may result in the arc extinguishing, in which case the arc may be reinitiated by the operator using the normal means). It shall be possible to terminate the welding current using the normal switch provided, for example the switch on a metal inert/active gas welding torch or foot control. No loss of stored data is permitted. After the test the output shall return to the original setting. Under no circumstances shall the no-load voltage exceed those values given in IEC 60974-1:2017 and IEC 60974-1:2017/AMD1:2019.

7.3.3 Performance criterion C

Temporary loss of function is permitted, requiring the arc welding equipment to be reset manually, for example by switching it off and on.

No loss of stored data is permitted unless it can be restored by the operation of the controls. Under no circumstances shall the no-load voltage exceed those values given in IEC 60974-1:2017 and IEC 60974-1:2017/AMD1:2019.

7.4 Immunity levels

Immunity requirements are given in Table 6 for the enclosure, Table 7 for the AC input power port and Table 8 for ports for measurement and control lines.

IECNORM.COM : Click to view the full PDF of IEC 60974-10:2020 RLV

Table 6 – Immunity levels – Enclosure

Phenomena		Units	Test specification	Basic standard	Remarks	Performance criteria
Radiofrequency EM field, amplitude modulated		MHz V/m (unmod. RMS) % AM (1 kHz)	80 to 1 000 10 80	IEC 61000-4-3: 2006/AMD1: 2007/AMD2: 2010	The test level specified is prior to modulation	A
Radiofrequency EM field, amplitude modulated		GHz V/m (unmod. RMS) % AM (1 kHz)	1,4 to 6,0 3 80	IEC 61000-4-3: 2006/AMD1: 2007/AMD2: 2010	The test level specified is the RMS value of the unmodulated carrier	A
Electrostatic discharge	Contact discharge	kV (charge voltage)	±4 [a]	IEC 61000-4-2: 2008	See basic standard for applicability of contact and/or air discharge test	B
	Air discharge	kV (charge voltage)	±8 [a]			B
[a] Testing is not required at lower levels than those specified.						

Table 7 – Immunity levels – AC input power port

Phenomena	Units	Test specification	Basic standard	Remarks	Performance criteria
Fast transients	kV (peak) Repetition frequency kHz Tr/Th ns	±2 5 or 100 5/50	IEC 61000-4-4: 2012	~~Direct injection~~ [f]	B
Radio-frequency common mode	MHz V (unmod. RMS) % AM (1 kHz)	0,15 to 80 10 80	IEC 61000-4-6: 2013	~~See note~~ The test level specified is ~~prior to modulation~~ the RMS value of the unmodulated carrier [a]	A
Surges line-to-line line-to-earth	Tr/Th µs kV (open-circuit voltage) kV (open-circuit voltage)	1,2/50 (8/20) ±1 ±2	IEC 61000-4-5: 2014/AMD1: 2017	~~This test is not required when normal functioning cannot be achieved because of the impact of the CDN on the EUT~~ [d, g]	B
Voltage dips	% residual voltage cycles at 50/60Hz	70 25/30	IEC 61000-4-11: 2004/AMD1: 2017 IEC 61000-4-34: 2005/AMD1: 2009	Voltage shift at zero crossings [b, c, e]	~~B~~ C
	% residual voltage cycles at 50/60Hz	40 10/12			C
	% residual voltage cycle	0 1			~~C~~ B

IECNORM.COM : Click to view the full PDF of IEC 60974-10:2020 RLV

Phenomena	Units	Test specification	Basic standard	Remarks	Performance criteria

~~NOTE~~

[a] The test level can also be defined as the equivalent current into a 150 Ω load.

[b] Applicable only to input PORTS.

[c] For electronic power converters, the operation of protective devices (e.g. undervoltage protection) and the performance criterion C are allowed.

[d] For supply voltages where no test equipment is commercially available (e.g. CDNs), this test is not required.

[e] The test shall be carried out at the frequencies appropriate to the power supply frequency. Equipment intended to be used in regions where only one of these frequencies is applied needs to be tested at this specific frequency only.

[f] The test may be performed at one or at both repetition frequencies. The use of 5 kHz repetition frequency is traditional; however, 100 kHz is closer to reality.

[g] In cases where a manufacturer's specification requires external protection devices or measures which are clearly specified in the user's manual, the test requirements of this document shall be applied with the external protection devices or measures in place.

Table 8 – Immunity levels – Ports for process, signalling, measurement and control

Phenomena	Units	Test specification	Basic standard	Remarks	Performance criteria
Fast transients	kV (peak) Tr/Th ns Repetition frequency kHz	±2 5/50 5	IEC 61000-4-4: 2012	Capacitive clamp used [b, f]	B
Radio-frequency common mode	MHz V (unmod. RMS) % AM (1kHz)	0,15 to 80 10 80	IEC 61000-4-6: 2013	~~See note~~ The test level specified is ~~prior to modulation~~ the RMS value of the unmodulated carrier [a, b]	A
Surge line-to-line line-to-earth	Tr/Th µs kV (open-circuit voltage) kV (open-circuit voltage)	1,2/50 0,5[a] ±1	IEC 61000-4-5: 2014/AMD1: 2017	[c, d, e]	B

~~Applicable to measurement and control ports interfacing to cables unless the total length according to manufacturers' specifications does not exceed 3 m.~~

~~NOTE~~

[a] The test level can also be defined as the equivalent current into a 150 Ω load.

[b] Applicable only to PORTS interfacing with cables whose total length according to the manufacturer's functional specification may exceed 3 m.

[c] Applicable only to PORTS interfacing with long distance lines. A long distance line is a line connected to a signal/control port and which inside a building is longer than 30 m, or which leaves the building (including a line installed outdoors).

[d] Where normal functioning cannot be achieved because of the impact of the coupling/decoupling network (CDN) on the EUT, the test shall be done with the reduced functionality. A rationale shall be given in the test report for doing so. After the test and the removal of the CDN, the normal function shall not be affected.

[e] Signal ports directly connected to AC power network shall be treated as AC power ports.

[f] The test may be performed at one or at both repetition frequencies. The use of 5 kHz repetition frequency is traditional; however, 100 kHz is closer to reality.

IECNORM.COM : Click to view the full PDF of IEC 60974-10:2020 RLV

8 Documentation for the purchaser/user

The documentation made available to the purchaser/user prior to the purchase shall clearly indicate restrictions for use, due to:

a) the RF equipment class (Class A or Class B);

b) low-frequency (LF) requirements for the public low voltage supply network connection.

Symbol 1 given in Annex C is recommended to be used for Class A equipment to indicate the RF equipment class and restrictions for use.

Symbol 2 given in Annex C is recommended to be used to indicate restrictions for use due to LF requirements for the public low voltage supply network connection.

The user shall be made aware of the fact that proper installation and use of the arc welding equipment is necessary to minimize possible interfering emissions. ~~The manufacturer or his authorized representative shall be responsible for including instructions and information with each welding power source as follows.~~

The welding power source shall include instructions and information as follows.

a) For Class B equipment, a written statement that Class B equipment complies with electromagnetic compatibility requirements in industrial and residential environments, including residential locations where the electrical power is provided by the public low-voltage supply system.

b) For Class A equipment the following warning or its equivalent shall be included in the instruction manual:

   This Class A equipment is not intended for use in residential locations where the electrical power is provided by the public low-voltage supply system. There can be potential difficulties in ensuring electromagnetic compatibility in those locations, due to conducted as well as radiated radio-frequency disturbances.

c) If the equipment with an input current below 75 A per phase is intended to be connected to public low voltage systems, and it does comply with IEC 61000-3-11:2017 or IEC 61000-3-12:2011 based on system impedance restrictions, the information given in the next paragraph or its equivalent shall be included in the instruction manual. The restriction shall be given as the lower value of the permissible system impedances (in mΩ) or the higher value of the required short circuit power (in MVA) resulting from tests in accordance with these standards. The impedance value may be calculated from the short circuit power value and vice versa.

   Provided that the public low voltage system impedance at the point of common coupling is lower than XX mΩ (or the short circuit power is higher than XX MVA), this equipment is compliant with IEC 61000-3-11:2017 and IEC 61000-3-12:2011 and can be connected to public low voltage systems. It is the responsibility of the installer or user of the equipment to ensure, by consultation with the distribution network operator if necessary, that the system impedance complies with the impedance restrictions.

d) If the equipment with an input current below 75 A per phase is intended to be connected to public low voltage systems, and it does not comply with IEC 61000-3-12:2011 the following information or its equivalent shall be included in the instruction manual:

   This equipment does not comply with IEC 61000-3-12:2011. If it is connected to a public low voltage system, it is the responsibility of the installer or user of the equipment to ensure, by consultation with the distribution network operator, that the equipment may be connected.

e) Information on any special measures that have to be taken to achieve compliance, for example the use of shielded cables.

f) Recommendations on the assessment of the surrounding area, to identify necessary precautions required for the installation and use, to minimize disturbances; see Clause A.2 and Clause A.3.

IECNORM.COM : Click to view the full PDF of IEC 60974-10:2020 RLV

g) Recommendations on methods to minimize disturbances; see Clause A.4.

h) A statement drawing attention to the user's responsibility with respect to interference from welding.

IECNORM.COM : Click to view the full PDF of IEC 60974-10:2020 RLV

Annex A
(informative)

Installation and use

A.1 General

The user is responsible for installing and using the arc welding equipment according to the manufacturer's instructions. If electromagnetic disturbances are detected, then it shall be the responsibility of the user of the arc welding equipment to resolve the situation with the technical assistance of the manufacturer. In some cases this remedial action may be as simple as earthing the welding circuit (see note). In other cases, it could involve constructing an electromagnetic screen enclosing the welding power source and the work complete with associated input filters. In all cases electromagnetic disturbances shall be reduced to the point where they are no longer troublesome.

NOTE The practice for earthing the welding circuit is dependent on local safety regulations. Changing the earthing arrangements to improve EMC can affect the risk of injury or equipment damage. Further guidance is given in IEC 60974-9:2018.

A.2 Assessment of area

Before installing arc welding equipment the user shall make an assessment of potential electromagnetic problems in the surrounding area. The following shall be taken into account:

a) other supply cables, control cables, signalling and telephone cables above, below and adjacent to the arc welding equipment;

b) radio and television transmitters and receivers;

c) computer and other control equipment;

d) safety critical equipment, for example guarding of industrial equipment;

e) the health of the people around, for example the use of pacemakers and hearing aids;

f) equipment used for calibration or measurement;

g) the immunity of other equipment in the environment. The user shall ensure that other equipment being used in the environment is compatible. This may require additional protection measures;

h) the time of day that welding or other activities are to be carried out.

The size of the surrounding area to be considered will depend on the structure of the building and other activities that are taking place. The surrounding area may extend beyond the boundaries of the premises.

A.3 Assessment of welding installation

In addition to the assessment of the area, the assessment of arc welding installations may be used to evaluate and resolve cases of interference. An emission assessment should include *in situ* measurements as specified in Clause 10 of CISPR 11:~~2009~~2015/AMD1:2016. *In situ* measurements may also be used to confirm the efficiency of mitigation measures.

IECNORM.COM : Click to view the full PDF of IEC 60974-10:2020 RLV

A.4 Mitigation measures

A.4.1 Public supply system

Arc welding equipment should be connected to the public supply system according to the manufacturer's recommendations. If interference occurs, it may be necessary to take additional precautions such as filtering of the public supply system. Consideration should be given to shielding the supply cable of permanently installed arc welding equipment, in metallic conduit or equivalent. Shielding should be electrically continuous throughout its length. The shielding should be connected to the welding power source so that good electrical contact is maintained between the conduit and the welding power source enclosure.

A.4.2 Maintenance of the arc welding equipment

The arc welding equipment should be routinely maintained according to the manufacturer's recommendations. All access and service doors and covers should be closed and properly fastened when the arc welding equipment is in operation. The arc welding equipment should not be modified in any way, except for those changes and adjustments covered in the manufacturer's instructions. In particular, the spark gaps of arc striking and stabilising devices should be adjusted and maintained according to the manufacturer's recommendations.

A.4.3 Welding cables

The welding cables should be kept as short as possible and should be positioned close together, running at or close to the floor level.

A.4.4 Equipotential bonding

Bonding of all metallic objects in the surrounding area should be considered. However, metallic objects bonded to the work piece will increase the risk that the operator could receive an electric shock by touching these metallic objects and the electrode at the same time. The operator should be insulated from all such bonded metallic objects.

A.4.5 Earthing of the workpiece

Where the workpiece is not bonded to earth for electrical safety, nor connected to earth because of its size and position, for example, a ship's hull or building steelwork, a connection bonding the workpiece to earth may reduce emissions in some, but not all instances. Care should be taken to prevent the earthing of the workpiece increasing the risk of injury to users or damage to other electrical equipment. Where necessary, the connection of the workpiece to earth should be made by a direct connection to the workpiece, but in some countries where direct connection is not permitted, the bonding should be achieved by suitable capacitance, selected according to national regulations.

A.4.6 Screening and shielding

Selective screening and shielding of other cables and equipment in the surrounding area may alleviate problems of interference. Screening of the entire welding area may be considered for special applications.

IECNORM.COM : Click to view the full PDF of IEC 60974-10:2020 RLV

Annex B
(informative)

Limits

~~B.1 General~~

~~The limits given in the standards referred to in the normative part of the present standard are summarized in Tables B.1 to B.10 for information. As some of the references refer to specific parts of tables of limits given in the referenced documents, only the applicable parts of those tables are duplicated.~~

~~B.2 Mains terminal disturbance voltage limits~~

~~Source: CISPR 11:2009, Amendment 1:2010~~

~~Table B.1 – Mains terminal disturbance voltage limits, idle state~~

~~Frequency range~~ ~~MHz~~	~~Class B~~ ~~dBμV~~		~~Class A~~ ~~dBμV~~	
	~~Quasi-peak~~	~~Average~~	~~Quasi-peak~~	~~Average~~
~~0,15-0,50~~	~~66~~ ~~Decreasing linearly with logarithm of frequency to~~ ~~56~~	~~56~~ ~~46~~	~~79~~	~~66~~
~~0,50-30~~	~~56~~	~~46~~	~~73~~	~~60~~

~~Table B.2 – Mains terminal disturbance voltage limits, load conditions~~

~~Frequency range~~ ~~MHz~~	~~Class B~~ ~~dBμV~~		~~Class A maximum rated input power ≤ 75 kVA [a]~~ ~~dBμV~~		~~Class A maximum rated input power > 75 kVA [a]~~ ~~dBμV~~	
	~~Quasi-peak~~	~~Average~~	~~Quasi-peak~~	~~Average~~	~~Quasi-peak~~	~~Average~~
~~0,15-0,50~~	~~66~~ ~~Decreasing linearly with logarithm of frequency to~~ ~~56~~	~~56~~ ~~46~~	~~100~~	~~90~~	~~130~~	~~120~~
~~0,50-5~~	~~56~~	~~46~~	~~86~~	~~76~~	~~125~~	~~115~~
~~5-30~~	~~60~~	~~50~~	~~90~~ ~~Decreasing linearly with logarithm of frequency to~~ ~~70~~	~~80~~ ~~60~~	~~115~~	~~105~~

~~[a] The maximum rated input power is calculated using the rated maximum supply current I_{1max}.~~

IECNORM.COM : Click to view the full PDF of IEC 60974-10:2020 RLV

~~B.3 Electromagnetic radiation disturbance limits~~

~~Source: CISPR 11:2009, Amendment 1:2010~~

~~Table B.3 – Electromagnetic radiation disturbance limits, idle state~~

~~Frequency range~~ ~~MHz~~	~~Class B~~ ~~dBμV/m~~		~~Class A~~ ~~dBμV/m~~	
	~~10 m measuring distance~~	~~3 m measuring distance [a]~~	~~10 m measuring distance~~	~~3 m measuring distance [a]~~
~~30-230~~	~~30~~	~~40~~	~~40~~	~~50~~
~~230-1 000~~	~~37~~	~~47~~	~~47~~	~~57~~

~~[a] The limits specified for the 3 m separation distance apply only to small equipment meeting the size criterion defined in 3.6.~~

~~Table B.4 – Electromagnetic radiation disturbance limits, load conditions~~

~~Frequency range~~ ~~MHz~~	~~Class B~~ ~~dBμV/m~~		~~Class A~~ ~~dBμV/m~~	
	~~10 m measuring distance~~	~~3 m measuring distance [a]~~	~~10 m measuring distance~~	~~3 m measuring distance [a]~~
~~30~~	~~30~~	~~40~~	~~80~~	~~90~~
~~>30-80,872~~	~~30~~	~~40~~	~~Decreasing linearly with logarithm of frequency to~~	
~~80,872-81,848~~	~~30 [b]~~	~~40 [b]~~		
~~81,848-134,786~~	~~30~~	~~40~~		
~~134,786-136,414~~	~~30 [b]~~	~~40 [b]~~		
~~136,414- ≤230~~	~~30~~	~~40~~		
~~>230-1 000~~	~~37~~	~~47~~	~~60~~	~~70~~

~~[a] The limits specified for the 3 m separation distance apply only to small equipment meeting the size criterion defined in CISPR 11.~~

~~[b] 20 dB relaxation has been removed based on 6.3.3.2.~~

IECNORM.COM : Click to view the full PDF of IEC 60974-10:2020 RLV

~~B.4 Harmonic current limits~~

~~Sources: IEC 61000-3-2:2005 and IEC 61000-3-12:2011~~

~~Table B.5 – Maximum permissible harmonic current for equipment for non-professional use with input current I_{1max} ≤ 16 A~~

~~Harmonic order~~ ~~n~~	~~Harmonic current~~ ~~A~~
~~Odd harmonics~~	
~~3~~	~~3,45~~
~~5~~	~~1,71~~
~~7~~	~~1,16~~
~~9~~	~~0,60~~
~~11~~	~~0,50~~
~~13~~	~~0,32~~
~~$15 \leq n \leq 39$~~	~~$0,23 \times 15/n$~~
~~Even harmonics~~	
~~2~~	~~1,62~~
~~4~~	~~0,65~~
~~6~~	~~0,45~~
~~$8 \leq n \leq 40$~~	~~$0,35 \times 8/n$~~

~~Table B.6 – Current emission limits for equipment with I_{1max} ≤ 75 A other than balanced three-phase equipment~~

~~Minimum R_{sce}~~	~~Admissible individual harmonic current I_h/I_{ref} [a]~~ ~~%~~						~~Admissible harmonic parameters~~ ~~%~~	
	~~I_3~~	~~I_5~~	~~I_7~~	~~I_9~~	~~I_{11}~~	~~I_{13}~~	~~THC/I_{ref}~~	~~PWHC/I_{ref}~~
~~33~~	~~21,6~~	~~10,7~~	~~7,2~~	~~3,8~~	~~3,1~~	~~2~~	~~23~~	~~23~~
~~66~~	~~24~~	~~13~~	~~8~~	~~5~~	~~4~~	~~3~~	~~26~~	~~26~~
~~120~~	~~27~~	~~15~~	~~10~~	~~6~~	~~5~~	~~4~~	~~30~~	~~30~~
~~250~~	~~35~~	~~20~~	~~13~~	~~9~~	~~8~~	~~6~~	~~40~~	~~40~~
~~≥ 350~~	~~41~~	~~24~~	~~15~~	~~12~~	~~10~~	~~8~~	~~47~~	~~47~~
~~The relative values of even harmonics up to order 12 shall not exceed 16/h %. Even harmonics above order 12 are taken into account in THC and PWHC in the same way as odd order harmonics.~~ ~~Linear interpolation between successive R_{sce} values is permitted.~~								
~~[a] I_{ref} = reference current; I_h = harmonic current component.~~								

IECNORM.COM : Click to view the full PDF of IEC 60974-10:2020 RLV

~~Table B.7 – Current emission limits for balanced three-phase equipment with I_{1max} ≤ 75 A~~

~~Minimum R_{sce}~~	~~Admissible individual harmonic current I_h/I_{ref} [a] %~~				~~Admissible harmonic parameters %~~	
	~~I_5~~	~~I_7~~	~~I_{11}~~	~~I_{13}~~	~~THC/I_{ref}~~	~~PWHC/I_{ref}~~
~~33~~	~~10,7~~	~~7,2~~	~~3,1~~	~~2~~	~~13~~	~~22~~
~~66~~	~~14~~	~~9~~	~~5~~	~~3~~	~~16~~	~~25~~
~~120~~	~~19~~	~~12~~	~~7~~	~~4~~	~~22~~	~~28~~
~~250~~	~~31~~	~~20~~	~~12~~	~~7~~	~~37~~	~~38~~
~~≥ 350~~	~~40~~	~~25~~	~~15~~	~~10~~	~~48~~	~~46~~
~~The relative values of even harmonics up to order 12 shall not exceed 16/h %. Even harmonics above order 12 are taken into account in THC and PWHC in the same way as odd order harmonics.~~ ~~Linear interpolation between successive R_{sce} values is permitted.~~						
~~[a] I_{ref} = reference current; I_h = harmonic current component.~~						

~~Table B.8 – Current emission limits for balanced three-phase equipment with I_{1max} ≤ 75 A under specified conditions (a, b, c)~~

~~Minimum R_{sce}~~	~~Admissible individual harmonic current I_h/I_{ref} [a] %~~				~~Admissible harmonic parameters %~~	
	~~I_5~~	~~I_7~~	~~I_{11}~~	~~I_{13}~~	~~THC/I_{ref}~~	~~PWHC/I_{ref}~~
~~33~~	~~10,7~~	~~7,2~~	~~3,1~~	~~2~~	~~13~~	~~22~~
~~≥ 120~~	~~40~~	~~25~~	~~15~~	~~10~~	~~48~~	~~46~~
~~The relative values of even harmonics up to order 12 shall not exceed 16/h %. Even harmonics above order 12 are taken into account in THC and PWHC in the same way as odd order harmonics.~~ ~~Linear interpolation between both R_{sce} values is permitted.~~						
~~[a] I_{ref} = reference current; I_h = harmonic current component.~~						

~~Table B.9 – Current emission limits for balanced three-phase equipment with I_{1max} ≤ 75 A under specified conditions (d, e, f)~~

~~Minimum R_{sce}~~	~~Admissible individual harmonic current I_h/I_{ref} [a] %~~												~~Admissible harmonic parameters %~~	
	~~I_5~~	~~I_7~~	~~I_{11}~~	~~I_{13}~~	~~I_{17}~~	~~I_{19}~~	~~I_{23}~~	~~I_{25}~~	~~I_{29}~~	~~I_{31}~~	~~I_{35}~~	~~I_{37}~~	~~THC/I_{ref}~~	~~PWHC/I_{ref}~~
~~33~~	~~10,7~~	~~7,2~~	~~3,1~~	~~2~~	~~2~~	~~1,5~~	~~1,5~~	~~1,5~~	~~1~~	~~1~~	~~1~~	~~1~~	~~13~~	~~22~~
~~≥ 250~~	~~25~~	~~17,3~~	~~12,1~~	~~10,7~~	~~8,4~~	~~7,8~~	~~6,8~~	~~6,5~~	~~5,4~~	~~5,2~~	~~4,9~~	~~4,7~~	~~35~~	~~70~~
~~For R_{sce} equal to 33, the relative values of even harmonics up to order 12 shall not exceed 16/h %. The relative values of all harmonics from I_{14} to I_{40} not listed above shall not exceed 1 % of I_{ref}.~~ ~~For R_{sce} ≥ 250, the relative values of even harmonics up to order 12 shall not exceed 16/h %. The relative values of all harmonics from I_{14} to I_{40} not listed above shall not exceed 3 % of I_{ref}.~~ ~~Linear interpolation between both R_{sce} values is permitted.~~														
~~[a] I_{ref} = reference current; I_h = harmonic current component.~~														

IECNORM.COM : Click to view the full PDF of IEC 60974-10:2020 RLV

~~Table B.6 is applied to equipment other than balanced three-phase equipment and Tables B.7, B.8 and B.9 are applied to balanced three-phase equipment.~~

~~Table B.7 may be used for any balanced three-phase piece of equipment.~~

~~Table B.8 may be used with balanced three-phase equipment if any one of the following conditions is met.~~

~~a) The phase angle of the 5th harmonic current related to the fundamental phase voltage is in the range of 90° to 150°.~~

~~NOTE 1 This condition is normally fulfilled by equipment with an uncontrolled rectifier bridge and capacitive filter, including a 3 % a.c. or 4 % d.c. reactor.~~

~~b) The design of the equipment is such that the phase angle of the 5th harmonic current has no preferential value over time and can take any value in the whole interval (0°, 360°).~~

~~NOTE 2 This condition is normally fulfilled by converters with fully controlled thyristor bridges.~~

~~c) The 5th and 7th harmonic currents are each less than 5 % of the reference fundamental current.~~

~~NOTE 3 This condition is normally fulfilled by "12-pulse" equipment.~~

~~Table B.9 may be used with balanced three-phase equipment if any one of these conditions is met:~~

~~d) The 5th and 7th harmonic currents are each less than 3 % of the reference current during the whole test observation period.~~

~~e) The design of the piece of equipment is such that the phase angle of the 5th harmonic current has no preferential value over time and can take any value in the whole interval [0°, 360°].~~

~~f) The phase angle of the 5th harmonic current related to the fundamental phase-to-neutral voltage is in the range of 150° to 210° during the whole test observation period.~~

~~NOTE 4 This condition is normally fulfilled by a 6 pulse converter with a small d.c. link capacitance, operating as a load.~~

~~B.5 Limits for voltage fluctuations and flicker~~

~~Sources: IEC 61000-3-3:2013 and IEC 61000-3-11:2000~~

~~Table B.10 – Limits for arc welding equipment with I_{1max} ≤ 75 A~~

~~Maximum relative voltage change d_{max} %~~	~~Relative steady-state voltage change d_c [a] %~~	~~Short-term flicker indicator P_{st} [a]~~
~~7~~	~~3,3~~	~~1,0~~
~~[a] d_c and P_{st} limits are only applicable to equipment designed to be used for the manual metal arc (MMA) process.~~		

~~The P_{st} requirement is not applicable to voltage changes caused by manual switching.~~

~~Equipment which does not meet the limits given in Table B.10 when tested or evaluated with the reference impedance given in IEC 61000-3-3 is subject to conditional connection, and the manufacturer may either~~

~~a) determine the maximum permissible system impedance Z_{max} at the interface point of the users supply in accordance with 6.3 of IEC 61000-3-11:2000, and declare Z_{max} in the instruction manual, or~~

IECNORM.COM : Click to view the full PDF of IEC 60974-10:2020 RLV

~~b) test the equipment in accordance with 6.2 of IEC 61000-3-11:2000, and declare in the instruction manual that the equipment is intended for use only in premises having a service current capacity ≥ 100 A per phase.~~

B.1 General

Annex B provides information on the origin of the limits given in the main part of this document.

B.2 Conducted disturbance voltage limits

The limits given in the normative part of this document originate from the limits in CISPR 11:2015, CISPR 11:2015/AMD1:2016 and CISPR 11:2015/AMD2:2019.

The conducted disturbance voltage limits for the idle-state in table 1 originate from the limits in Tables 2 and 4 in CISPR 11:2015, CISPR 11:2015/AMD1:2016 and CISPR 11:2015/AMD2:2019.

The conducted disturbance voltage limits for the loaded-state in table 2 originate from the limits in Tables 8 and 9 in CISPR 11:2015, CISPR 11:2015/AMD1:2016 and CISPR 11:2015/AMD2:2019.

B.3 Output current ripple limit

The application of these limits to the peak-peak amplitude of the output current ripple ensures compliance with the limits for magnetic field emissions at a protection distance of 10 m from the welding circuit in the range from 150 kHz to 30 MHz as given in CISPR 11:2015, CISPR 11:2015/AMD1:2016 and CISPR 11:2015/AMD2:2019.

B.4 Radiated disturbance limits

The electromagnetic radiation disturbance limits in Table 4 for the idle-state are based on the group 1 limits in Tables 6 and 7 in CISPR 11:2015, CISPR 11:2015/AMD1:2016 and CISPR 11:2015/AMD2:2019.

The electromagnetic radiation disturbance limits in table 5 for the loaded-state of Class B arc welding equipment are based on the Group 2 limits given in Table 12 of CISPR 11:2015, CISPR 11:2015/AMD1:2016 and CISPR 11:2015/AMD2:2019.

The 20 dB relaxations in the frequency ranges 80,872 MHz to 81,848 MHz and 134,786 MHz to 136,414 MHz are not applicable to arc welding equipment.

The electromagnetic radiation disturbance limits in table 5 for the loaded state of Class A arc welding equipment in the frequency band 30 MHz to 1 000 MHz are based on the limits for class A EDM and arc welding equipment given in Table 11 of CISPR 11:2015, CISPR 11:2015/AMD1:2016 and CISPR 11:2015/AMD2:2019.

B.5 Output current ripple limits

The limits for the output current ripple were introduced in IEC 60794-10:2014/AMD1:2015.

IECNORM.COM : Click to view the full PDF of IEC 60974-10:2020 RLV

Annex C
(informative)

Symbols

Table C.1 provides symbols for the indication of the RF equipment class and restrictions for use.

Table C.1 – Symbols to describe EMC properties

N°	SOURCE	SYMBOL	FUNCTION, KEYWORD OR PHRASE	APPLICATION
1.	IEC 60417-5109 (2002-10)		Not to be used in residential locations where the electrical power is provided by the public low-voltage supply system	To identify Class A equipment and restrictions for use NOTE Symbol can be used on packaging, equipment or documentation for purchaser or user available prior to purchase
2.	IEC 60417-5939 (2002-10) and ISO 7000-0434A (2004-01) combined	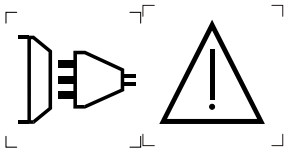	Restrictions for the connection to public low voltage supply networks apply	To identify restrictions of use with regard to required supply network parameters NOTE Symbol can be used on packaging, equipment or documentation for purchaser or user available prior to purchase

IECNORM.COM : Click to view the full PDF of IEC 60974-10:2020 RLV

Annex D
(normative)

Battery powered equipment

D.1 General

Annex D defines additional requirements for the welding equipment powered by internal or external batteries.

The equipment shall comply with the requirements in this document in all modes of operation.

D.2 Additional emission requirements

Any DC input power port of the welding equipment shall comply with the applicable conducted emissions limits for DC power ports of:

- Table 3 of IEC 61000-6-3:2006/AMD1:2010 for Class B equipment

NOTE Annex A of IEC 61000-6-4:2018 contains information on proposed requirements for the DC power PORT of Class A equipment.

External chargers shall comply with the applicable limits in:

- Tables 3, 4 and 5 of IEC 61000-6-4:2018 if used to charge Class A welding equipment
- Tables 1, 2, 3 and 4 of IEC 61000-6-3:2006/AMD1:2010 if used to charge Class B welding equipment

If a battery charger is intended to be used for both Class A and Class B welding equipment, the charger shall comply with the more stringent limits.

NOTE IEC 61000-6-3:2006 and IEC 61000-6-3:2006/AMD1:2010 and IEC 61000-6-4:2018 consider the highest internal frequency as well as the length of the connected cable to the DC power port.

D.3 Additional immunity requirements

Any DC input power port shall comply with the applicable immunity requirements for DC power ports of:

- Table 3 of IEC 61000-6-2:2016 for Class A equipment
- Table 3 of IEC 61000-6-1:2016 for Class B equipment

External chargers shall comply with:

- Tables 1, 2, 3 and 4 of IEC 61000-6-2:2016 if used to charge Class A welding equipment
- Tables 1, 2, 3 and 4 of IEC 61000-6-1:2016 if used to charge Class B welding equipment

If a battery charger is intended to be used for both Class A and Class B welding equipment, the charger shall be tested to the higher test levels.

NOTE IEC 61000-6-1:2016 and IEC 61000-6-2:2016 consider the highest internal frequency as well as the length of the connected cable to the DC power port.

IECNORM.COM : Click to view the full PDF of IEC 60974-10:2020 RLV

Annex E
(normative)

Equipment containing radio devices

E.1 General

Annex E defines additional requirements for welding equipment containing radio devices.

The welding equipment shall comply with any additional requirement in the applicable radio standard not specified in this document.

NOTE Examples are requirements regarding the antenna port.

The radio device shall comply with the applicable radio standard.

Exclusion bands specified in the applicable radio standard only apply to the radio functionality.

E.2 Additional emission requirements

For frequency ranges not defined in this document, the welding equipment shall comply with the applicable radiated emissions limits for the enclosure PORT of

- Table 3 of IEC 61000-6-4:2018 for Class A equipment
- Table 1 of IEC 61000-6-3:2006/AMD1:2010 for Class B equipment

For the radiated emission the transmitter function of the radio device is turned off.

E.3 Additional immunity requirements

The performance criterion C shall be applied to the radio function.

If an immunity test would cause damage to a radio receiver, additional mitigation measures shall be applied. These measures shall be documented in the test report. The documentation to the user shall indicate ports sensitive to these phenomena.

IECNORM.COM : Click to view the full PDF of IEC 60974-10:2020 RLV

Bibliography

IEC 60050-131:2002, *International Electrotechnical Vocabulary (IEV) – Part 131: Circuit theory*

IEC 60050-151:2001, *International Electrotechnical Vocabulary (IEV) – Part 151: Electrical and magnetic devices*

IEC 60050-161:1990, *International Electrotechnical Vocabulary (IEV) – Part 161 : Electromagnetic compatibility*

IEC 60050-851:2008, *International Electrotechnical Vocabulary (IEV) – Part 851: Electric welding*

IEC 60417~~-DB:2011~~[2], *Graphical symbols for use on equipment* (available at http://www.graphical-symbols.info/equipment)

IEC 60974-9:2018, *Arc welding equipment – Part 9:Installation and use*

IEC TS 61000-3-4:1998, *Electromagnetic compatibility (EMC) – Part 3-4: Limits – Limitation of emission of harmonic currents in low-voltage power supply systems for equipment with rated current greater than 16 A*

IEC Guide 107:2014, *Electromagnetic compatibility – Guide to the drafting of electromagnetic compatibility publications*

ISO 7000:~~2004~~2019, *Graphical symbols for use on equipment –~~ Index and synopsis~~ Registered symbols*

~~CISPR 14-1, *Electromagnetic compatibility – Requirements for household appliances, electric tools and similar apparatus – Part 1: Emission*~~

CISPR 32:2015, *Electromagnetic compatibility of multimedia equipment – Emission requirements*
CISPR 32:2015/AMD1:2019

~~[2] DB refers to IEC online database.~~

IECNORM.COM : Click to view the full PDF of IEC 60974-10:2020 RLV

IECNORM.COM : Click to view the full PDF of IEC 60974-10:2020 RLV

IEC 60974-10

Edition 4.0 2020-04

INTERNATIONAL STANDARD

NORME INTERNATIONALE

Arc welding equipment – Part 10: Electromagnetic compatibility (EMC) requirements

Matériel de soudage à l'arc – Partie 10: Exigences de compatibilité électromagnétique (CEM)

IECNORM.COM : Click to view the full PDF of IEC 60974-10:2020 RLV

IEC 60974-10:2020-04(en-fr)

CONTENTS

FOREWORD 5
1 Scope 7
2 Normative references 7
3 Terms and definitions 9
4 General test requirements 11
4.1 Test conditions 11
4.2 Measuring instruments 11
4.3 Artificial mains network 12
4.4 Voltage probe 12
4.5 Antennas 12
4.6 Coupling/decoupling network (CDN) 12
5 Test set-up for emission and immunity 12
5.1 General 12
5.2 Load 15
5.3 Ancillary equipment 16
5.3.1 General requirements 16
5.3.2 Wire feeders 16
5.3.3 Remote controls 16
5.3.4 Arc striking and stabilizing devices 16
5.3.5 Liquid cooling systems 17
6 Emission tests 17
6.1 Classification for RF emission tests 17
6.1.1 Class A equipment 17
6.1.2 Class B equipment 17
6.2 Test conditions 17
6.2.1 Welding power source 17
6.2.2 Load voltages 18
6.2.3 Wire feeders 19
6.2.4 Ancillary equipment 19
6.3 Emission limits 19
6.3.1 General 19
6.3.2 Mains terminal disturbance voltage 19
6.3.3 Conducted emissions at signal, control and measurement ports 21
6.3.4 Output current ripple 21
6.3.5 Electromagnetic radiation disturbance 22
6.3.6 Harmonics, voltage fluctuations and flicker 23
7 Immunity tests 25
7.1 Classification for immunity tests 25
7.1.1 Applicability of tests 25
7.1.2 Category 1 equipment 25
7.1.3 Category 2 equipment 25
7.2 Test conditions 25
7.3 Immunity performance criteria 25
7.3.1 Performance criterion A 25
7.3.2 Performance criterion B 26
7.3.3 Performance criterion C 26

IECNORM.COM : Click to view the full PDF of IEC 60974-10:2020 RLV

7.4 Immunity levels ... 26
8 Documentation for the purchaser/user ... 28
Annex A (informative) Installation and use ... 30
A.1 General ... 30
A.2 Assessment of area ... 30
A.3 Assessment of welding installation ... 30
A.4 Mitigation measures ... 31
A.4.1 Public supply system ... 31
A.4.2 Maintenance of the arc welding equipment ... 31
A.4.3 Welding cables ... 31
A.4.4 Equipotential bonding ... 31
A.4.5 Earthing of the workpiece ... 31
A.4.6 Screening and shielding ... 31
Annex B (informative) Limits ... 32
B.1 General ... 32
B.2 Conducted disturbance voltage limits ... 32
B.3 Output current ripple limit ... 32
B.4 Radiated disturbance limits ... 32
B.5 Output current ripple limits ... 32
Annex C (informative) Symbols ... 33
Annex D (normative) Battery powered equipment ... 34
D.1 General ... 34
D.2 Additional emission requirements ... 34
D.3 Additional immunity requirements ... 34
Annex E (normative) Equipment containing radio devices ... 35
E.1 General ... 35
E.2 Additional emission requirements ... 35
E.3 Additional immunity requirements ... 35
Bibliography ... 36

Figure 1 – Examples of ports ... 10
Figure 2 – Test set-up 1 for arc welding equipment ... 13
Figure 3 – Test set-up 2 for portable arc welding equipment ... 14
Figure 4 – Top view of test set-up as shown in Figure 2 ... 15
Figure 5 – Overview of harmonic requirements for supply current I_{1max} up to 75 A ... 24
Figure 6 – Overview of flicker requirements ... 24

Table 1 – Mains terminal disturbance voltage limits, idle state ... 20
Table 2 – Mains terminal disturbance voltage limits, load conditions ... 21
Table 3 – Output current ripple limits for Class B arc welding power sources ... 22
Table 4 – Electromagnetic radiation disturbance – Idle state ... 22
Table 5 – Electromagnetic radiation disturbance – Loaded state ... 23
Table 6 – Immunity levels – Enclosure ... 26
Table 7 – Immunity levels – AC input power port ... 27
Table 8 – Immunity levels – Ports for process, signalling, measurement and control ... 28

IECNORM.COM : Click to view the full PDF of IEC 60974-10:2020 RLV

Table C.1 – Symbols to describe EMC properties 33

IECNORM.COM : Click to view the full PDF of IEC 60974-10:2020 RLV

INTERNATIONAL ELECTROTECHNICAL COMMISSION

ARC WELDING EQUIPMENT –

Part 10: Electromagnetic compatibility (EMC) requirements

FOREWORD

1) The International Electrotechnical Commission (IEC) is a worldwide organization for standardization comprising all national electrotechnical committees (IEC National Committees). The object of IEC is to promote international co-operation on all questions concerning standardization in the electrical and electronic fields. To this end and in addition to other activities, IEC publishes International Standards, Technical Specifications, Technical Reports, Publicly Available Specifications (PAS) and Guides (hereafter referred to as "IEC Publication(s)"). Their preparation is entrusted to technical committees; any IEC National Committee interested in the subject dealt with may participate in this preparatory work. International, governmental and non-governmental organizations liaising with the IEC also participate in this preparation. IEC collaborates closely with the International Organization for Standardization (ISO) in accordance with conditions determined by agreement between the two organizations.

2) The formal decisions or agreements of IEC on technical matters express, as nearly as possible, an international consensus of opinion on the relevant subjects since each technical committee has representation from all interested IEC National Committees.

3) IEC Publications have the form of recommendations for international use and are accepted by IEC National Committees in that sense. While all reasonable efforts are made to ensure that the technical content of IEC Publications is accurate, IEC cannot be held responsible for the way in which they are used or for any misinterpretation by any end user.

4) In order to promote international uniformity, IEC National Committees undertake to apply IEC Publications transparently to the maximum extent possible in their national and regional publications. Any divergence between any IEC Publication and the corresponding national or regional publication shall be clearly indicated in the latter.

5) IEC itself does not provide any attestation of conformity. Independent certification bodies provide conformity assessment services and, in some areas, access to IEC marks of conformity. IEC is not responsible for any services carried out by independent certification bodies.

6) All users should ensure that they have the latest edition of this publication.

7) No liability shall attach to IEC or its directors, employees, servants or agents including individual experts and members of its technical committees and IEC National Committees for any personal injury, property damage or other damage of any nature whatsoever, whether direct or indirect, or for costs (including legal fees) and expenses arising out of the publication, use of, or reliance upon, this IEC Publication or any other IEC Publications.

8) Attention is drawn to the Normative references cited in this publication. Use of the referenced publications is indispensable for the correct application of this publication.

9) Attention is drawn to the possibility that some of the elements of this IEC Publication may be the subject of patent rights. IEC shall not be held responsible for identifying any or all such patent rights.

International Standard IEC 60974-10 has been prepared by IEC technical committee 26: Electric welding.

This fourth edition cancels and replaces the third edition published in 2014 and its Amendment 1:2015. This edition constitutes a technical revision.

This edition includes the following significant technical changes with respect to the previous edition:

a) updated normative references;

b) requirements for battery powered equipment;

c) requirements for equipment combined with radio transmitters/receivers.

IECNORM.COM : Click to view the full PDF of IEC 60974-10:2020 RLV

The text of this standard is based on the following documents:

FDIS	Report on voting
26/695/FDIS	26/697/RVD

Full information on the voting for the approval of this standard can be found in the report on voting indicated in the above table.

This publication has been drafted in accordance with the ISO/IEC Directives, Part 2.

A list of all parts in the IEC 60974 series, published under the general title *Arc welding equipment*, can be found on the IEC web site.

The committee has decided that the contents of this publication will remain unchanged until the stability date indicated on the IEC web site under "http://webstore.iec.ch" in the data related to the specific publication. At this date, the publication will be

- reconfirmed,
- withdrawn,
- replaced by a revised edition, or
- amended.

IECNORM.COM : Click to view the full PDF of IEC 60974-10:2020 RLV

ARC WELDING EQUIPMENT –

Part 10: Electromagnetic compatibility (EMC) requirements

1 Scope

This part of IEC 60974 is applicable to equipment for arc welding and allied processes, including power sources and ancillary equipment, for example wire feeders, liquid cooling systems, arc striking and stabilizing devices and chargers for battery powered equipment.

NOTE 1 Allied processes are, for example, plasma cutting and arc stud welding.

NOTE 2 This document does not specify basic safety requirements for arc welding equipment such as protection against electric shock, unsafe operation, insulation coordination and related dielectric tests.

Arc welding equipment containing a radio receiver or transmitter is within the scope of this document.

The radiated emission requirements in this document are not intended to be applicable to the intentional transmissions from a radio transmitter as defined by the ITU nor to any spurious emissions related to these intentional transmitters.

This document specifies

a) applicable standards and test methods for radio-frequency (RF) emissions;

b) applicable standards and test methods for harmonic current emission, voltage fluctuations and flicker;

c) immunity requirements and test methods for continuous and transient, conducted and radiated disturbances including electrostatic discharges;

d) additional requirements for equipment powered by internal or external batteries (Annex D);

e) additional requirements for equipment containing radio frequency transmitters/receivers (Annex E).

Arc welding equipment type tested in accordance with, and which has met the requirements set in, this document is considered to be in compliance for all applications.

2 Normative references

The following documents are referred to in the text in such a way that some or all of their content constitutes requirements of this document. For dated references, only the edition cited applies. For undated references, the latest edition of the referenced document (including any amendments) applies.

IEC 60974-1:2017, *Arc welding equipment – Part 1: Welding power sources*
IEC 60974-1:2017/AMD1:2019

IEC 60974-6:2015, *Arc welding equipment – Part 6: Limited duty equipment*

IEC 61000-3-2:2018, *Electromagnetic compatibility (EMC) – Part 3-2: Limits – Limits for harmonic current emissions (equipment input current ≤ 16 A per phase)*

IECNORM.COM : Click to view the full PDF of IEC 60974-10:2020 RLV

IEC 61000-3-3:2013, *Electromagnetic compatibility (EMC) – Part 3-3: Limits – Limitation of voltage changes, voltage fluctuations and flicker in public low-voltage supply systems, for equipment with rated current ≤ 16 A per phase and not subject to conditional connection*
IEC 61000-3-3:2013/AMD1:2017

IEC 61000-3-11:2017, *Electromagnetic compatibility (EMC) – Part 3-11: Limits – Limitation of voltage changes, voltage fluctuations and flicker in public low-voltage supply systems – Equipment with rated current ≤ 75 A and subject to conditional connection*

IEC 61000-3-12:2011, *Electromagnetic compatibility (EMC) – Part 3-12: Limits for harmonic currents produced by equipment connected to public low-voltage systems with input current > 16 A and ≤ 75 A per phase*

IEC 61000-4-2:2008, *Electromagnetic compatibility (EMC) – Part 4-2: Testing and measurement techniques – Electrostatic discharge immunity test*

IEC 61000-4-3:2006, *Electromagnetic compatibility (EMC) – Part 4-3: Testing and measurement techniques – Radiated, radio-frequency, electromagnetic field immunity test*
IEC 61000-4-3:2006/AMD1:2007
IEC 61000-4-3:2006/AMD2:2010

IEC 61000-4-4:2012, *Electromagnetic compatibility (EMC) – Part 4-4: Testing and measurement techniques – Electrical fast transient/burst immunity test*

IEC 61000-4-5:2014, *Electromagnetic compatibility (EMC) – Part 4-5: Testing and measurement techniques – Surge immunity test*
IEC 61000-4-5:2014/AMD1:2017

IEC 61000-4-6:2013, *Electromagnetic compatibility (EMC) – Part 4-6: Testing and measurement techniques – Immunity to conducted disturbances, induced by radio-frequency fields*

IEC 61000-4-11:2004, *Electromagnetic compatibility (EMC) – Part 4-11: Testing and measurement techniques – Voltage dips, short interruptions and voltage variations immunity tests*
IEC 61000-4-11:2004/AMD1:2017

IEC 61000-4-34:2005, *Electromagnetic compatibility (EMC) – Part 4-34: Testing and measurement techniques – Voltage dips, short interruptions and voltage variations immunity tests for equipment with input current more than 16 A per phase*
IEC 61000-4-34:2005/AMD1:2009

IEC 61000-6-1:2016, *Electromagnetic compatibility (EMC) – Part 6-1: Generic standards – Immunity standard for residential, commercial and light-industrial environments*

IEC 61000-6-2:2016, *Electromagnetic compatibility (EMC) – Part 6-2: Generic standards – Immunity standard for industrial environments*

IEC 61000-6-3:2006, *Electromagnetic compatibility (EMC) – Part 6-3: Generic standards – Emission standard for residential, commercial and light-industrial environments*
IEC 61000-6-3:2006/AMD1:2010

IEC 61000-6-4:2018, *Electromagnetic compatibility (EMC) – Part 6-4: Generic standards – Emission standard for industrial environments*

IECNORM.COM : Click to view the full PDF of IEC 60974-10:2020 RLV

CISPR 11:2015, *Industrial, scientific and medical equipment – Radio-frequency disturbance characteristics – Limits and methods of measurement*
CISPR 11:2015/AMD1:2016
CISPR 11:2015/AMD2:2019

CISPR 14-1:2016, *Electromagnetic compatibility – Requirements for household appliances, electric tools and similar apparatus – Part 1: Emission*

CISPR 16-1-1:2019, *Specification for radio disturbance and immunity measuring apparatus and methods – Part 1-1: Radio disturbance and immunity measuring apparatus – Measuring apparatus*

CISPR 16-1-2:2014, *Specification for radio disturbance and immunity measuring apparatus and methods – Part 1-2: Radio disturbance and immunity measuring apparatus – Coupling devices for conducted disturbance measurements*
CISPR 16-1-2:2014/AMD1:2017

CISPR 16-1-4:2019, *Specification for radio disturbance and immunity measuring apparatus and methods – Part 1-4: Radio disturbance and immunity measuring apparatus – Antennas and test sites for radiated disturbance measurements*

3 Terms and definitions

For the purposes of this document, terms and definitions in IEC 60974-1 as well as the following apply.

ISO and IEC maintain terminological databases for use in standardization at the following addresses:

- IEC Electropedia: available at http://www.electropedia.org/
- ISO Online browsing platform: available at http://www.iso.org/obp

3.1
click
disturbance which exceeds the limit of continuous disturbance no longer than 200 ms and which is separated from a subsequent disturbance by at least 200 ms

Note 1 to entry: Both intervals are related to the level of the limit of continuous disturbance.

Note 2 to entry: A click may contain a number of impulses, in which case the relevant time is that from the beginning of the first to the end of the last impulse.

[SOURCE: IEC 60050-851:2008, 851-15-13]

3.2
coupling network
electrical circuit for transferring energy from one circuit to another with a defined impedance

Note 1 to entry: Coupling and decoupling devices can be integrated into one box (coupling and decoupling network (CDN)) or they can be in separate networks.

[SOURCE:IEC 61000-4-6:2013, 3.7]

3.3
CDN
coupling/decoupling network
electrical circuit incorporating the functions of both the coupling and decoupling networks

[SOURCE:IEC 61000-4-6:2013, 3.8]

IECNORM.COM : Click to view the full PDF of IEC 60974-10:2020 RLV

3.4
decoupling network
decoupling device
electrical circuit for preventing test signals applied to the equipment under test (EUT) from affecting other devices,equipment or systems that are not under test

[SOURCE:IEC 61000-4-6:2013, 3.9]

3.5
FAR
fully-anechoic room
shielded enclosure, the internal surfaces of which are lined with radio-frequency-energy absorbing material (i.e. RF absorber) that absorbs electromagnetic energy in the frequency range of interest

[SOURCE: CISPR 11:2015/AMD1:2016, 3.20]

3.6
OATS
open-area test site
facility used for measurements of electromagnetic fields the intention for which is to simulate a semi-free-space environment over a specified frequency range that is used for radiated emission testing of products

Note 1 to entry: An OATS typically is located outdoors in an open area, and has an electrically-conducting ground plane.

[SOURCE: CISPR 11:2015/AMD1:2016, 3.21]

3.7
port
particular interface of an equipment which couples this equipment with the external electromagnetic environment (IEC 60050-161:2018, 161-01-01) and through which the equipment is influenced by this environment

EXAMPLE Examples of ports of interest are shown in Figure 1. The enclosure port is the physical boundary of the apparatus (e.g. enclosure). The enclosure port provides for radiated and electrostatic discharge (IEC 60050-161:2018, 161-01-22) energy transfer, whereas the other ports provide for conducted energy transfer.

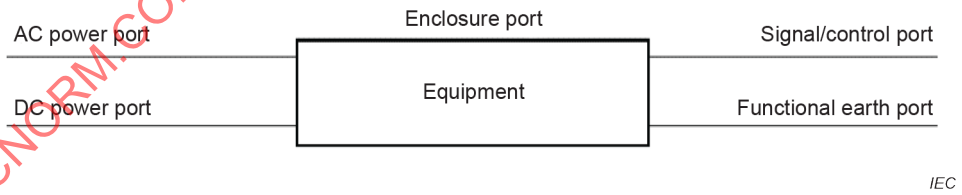

Figure 1 – Examples of ports

Note 1 to entry: Ports in the subject area of electromagnetic compatibility are specific cases of the port defined in IEC 60050-131:2002, 131-12-60.

[SOURCE: IEC Guide 107:2014, 3.1.12, modified – The presentation of the term and the wording of the definition have been revised for compatibility with IEC 60050 (all parts).]

3.8
portable, adj
capable to be carried by one person

Note 1 to entry: Portability is typically specified by the equipment manufacturer based on the intended use, the equipment design and/or local regulation.

IECNORM.COM : Click to view the full PDF of IEC 60974-10:2020 RLV

[SOURCE: IEC 60050-151:2001, 151-16-47, modified – The note to entry has been entirely redrafted.]

3.9
SAC
semi-anechoic chamber
shielded enclosure, in which five of the six internal surfaces are lined with radio-frequency energy absorbing material (i.e. RF absorber) that absorbs electromagnetic energy in the frequency range of interest, and the bottom horizontal surface is a conducting ground plane for use with OATS test set-ups

[SOURCE: CISPR 11:2015/AMD1:2016, 3.22]

3.10
small equipment
equipment, either positioned on a table top or standing on the floor which, including its cables fits in an imaginary cylindrical test volume of 1,2 m in diameter and 1,5 m height (to ground plane)

[SOURCE: CISPR 11:2015, 3.17, modified – Replacement of the term "small size equipment" by "small equipment".]

3.11
wired network port
PORT for the connection of voice, data and signalling transfers intended to interconnect widely-dispersed systems by direct connection to a single-user or multi-user communication network

Note 1 to entry: Examples of these include CATV, PSTN, ISDN, xDSL, LAN and similar networks.

Note 2 to entry: These PORTS may support screened or unscreened cables and may also carry AC or DC power where this is an integral part of the telecommunication specification.

[SOURCE: CISPR 32:2015, 3.1.32]

4 General test requirements

4.1 Test conditions

Tests shall be carried out on completely assembled equipment representative of the series production. Tests shall be performed within the specified operating conditions given in IEC 60974-1:2017 and IEC 60974-1:2017/AMD1:2019 or IEC 60974-6:2015, and at the rated supply voltage and frequency. Results obtained for RF emission and immunity at 50 Hz are valid for the same model operating at 60 Hz and vice versa.

Where this document gives options for testing particular requirements with a choice of test methods, compliance can be shown against any of the test methods, using the specified limits with the restrictions provided in the relevant tables.

Identical units may be used for testing in parallel. In this case, this information shall be recorded in the test report.

4.2 Measuring instruments

The measuring equipment shall comply with the requirements of CISPR 16-1-1:2019 and the standards referred to in Table 6, Table 7 and Table 8 as applicable.

IECNORM.COM : Click to view the full PDF of IEC 60974-10:2020 RLV

4.3 Artificial mains network

Measurement of the mains terminal disturbance voltage shall be made using an artificial mains network, if commercially available, consisting of 50 Ω/50 μH or 50 Ω/50 μH + 5 Ω V-network as specified in CISPR 16-1-2:2014 and CISPR 16-1-2:2014/AMD1:2017.

The artificial network is required to provide a defined impedance at RF across the mains supply at the point of measurement and also to provide for isolation of the equipment under test from ambient noise on the power lines.

4.4 Voltage probe

A voltage probe as specified in CISPR 16-1-2:2014 and CISPR 16-1-2:2014/AMD1:2017 shall be used when the artificial mains network cannot be used. The probe is connected sequentially between each line and the reference earth. The probe shall consist of a blocking capacitor and a resistor such that the total resistance between the line and earth is at least 1 500 Ω. The effect on the accuracy of measurement of the capacitor or any other device which may be used to protect the measuring receiver against dangerous currents shall be either less than 1 dB or allowed for in calibration.

4.5 Antennas

In the frequency range from 30 MHz to 6 GHz, the antenna(s) used shall be as specified in CISPR 16-1-4:2019.

Measurements shall be made for both horizontal and vertical polarization.

On an OATS or in a SAC, the nearest point of the antenna(s) to the ground shall be not less than 0,25 m.

For measurements in a FAR, the antenna height is fixed at the geometrical middle height of the validated test volume.

4.6 Coupling/decoupling network (CDN)

If a shielded chamber is required and the load is situated outside the shielded chamber, a load-decoupling network connected to the outside load via suitable RF filters shall be used inside the chamber. A 150 Ω CDN AF 2, as specified in IEC 61000-4-6:2013, suitable for the respective load current and voltage, shall be used. The RF-port of the CDN shall be terminated with 50 Ω.

Any suitable coupling devices specified in CISPR 16-1-2:2014 and CISPR 16-1-2:2014/AMD1:2017 may be used for the conducted emission assessment of signal, control or measurement ports.

5 Test set-up for emission and immunity

5.1 General

Emission and immunity testing of equipment that is not PORTABLE shall be carried out on equipment configured in accordance with Figure 2. For PORTABLE equipment, either the test set-up given in Figure 2 or the test set-up given in Figure 3 shall be used. Arc welding equipment tested in one of these configurations shall be considered to have met the necessary requirements of this document.

For the measurement of the output current ripple, there are no specific requirements for the equipment configuration.

IECNORM.COM : Click to view the full PDF of IEC 60974-10:2020 RLV

For RF emission, EM field immunity, common mode immunity, and fast transient immunity tests the following dimensions apply:

- in Figure 2, a shall be 1 m;
- in Figure 2 and Figure 3, b shall be 0,4 m or less;
- in Figure 3, h shall be 0,8 m;
- In Figure 3, the horizontal distance c between the EUT and the convential load shall be 1 m or less.

Dimensions a, b and h are undefined for all other tests.

The tolerance for the dimensions a and h is ± 0,05 m.

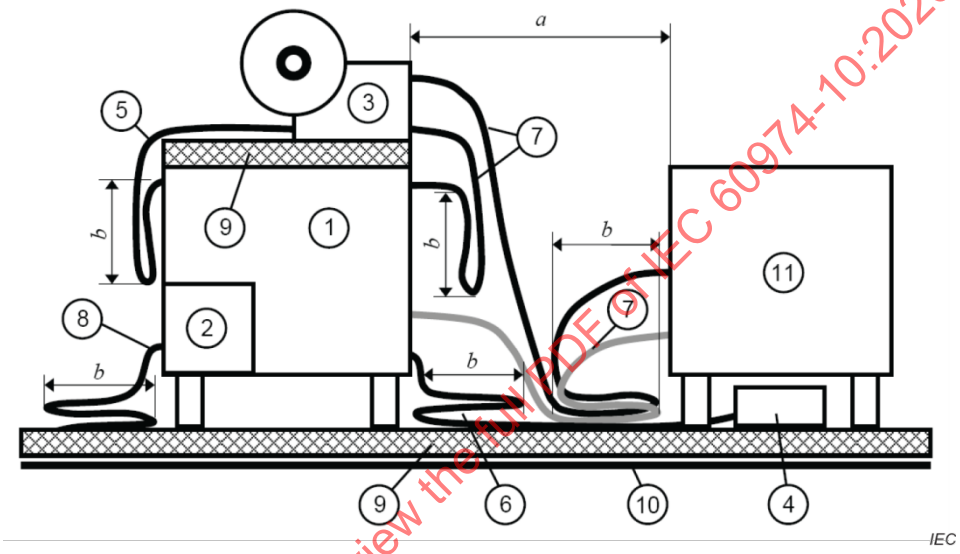

Key

1	Welding power source	7	Welding cable (bundled)
2	Liquid cooling system	8	Input supply cable (bundled)
3	Wire feeder	9	Insulation
4	Remote control	10	Reference ground plane
5	Interconnection cable (bundled)	11	Conventional load
6	Remote control cable (bundled)		

a Distance between power source and load or load decoupling network

b Cable bundle length

NOTE 1 Items 2, 3, and 4 are ancillary equipment, as applicable, and are typically positioned as specified by the equipment manufacturer.

NOTE 2 Insulation (item 9) is placed between items 1 and 3 if specified by the manufacturer.

Figure 2 – Test set-up 1 for arc welding equipment

If, due to the design of the arc welding equipment, these tests cannot be carried out as described, the manufacturer's recommendations (for example, temporary bypassing or disablement of control circuits) should be followed in order to match these test objectives. Any temporary changes to the arc welding equipment shall be documented.

IECNORM.COM : Click to view the full PDF of IEC 60974-10:2020 RLV

If ancillary equipment can be connected to the welding power source, then the welding power source shall be tested with the minimum configuration of ancillary equipment necessary to exercise the ports. If the welding power source has a large number of similar PORTS or PORTS with many similar connections, then a sufficient number shall be selected to simulate actual operating conditions and to ensure that all the different types of termination are covered.

For mains terminal voltage disturbance tests the welding power source shall be connected to the electricity supply using the V-network specified in 4.3 whenever possible. The V-network shall be located so that its closest surface is no less than 0,8 m from the nearest boundary of the equipment under test. The input cable shall have a minimum length of 2 m.

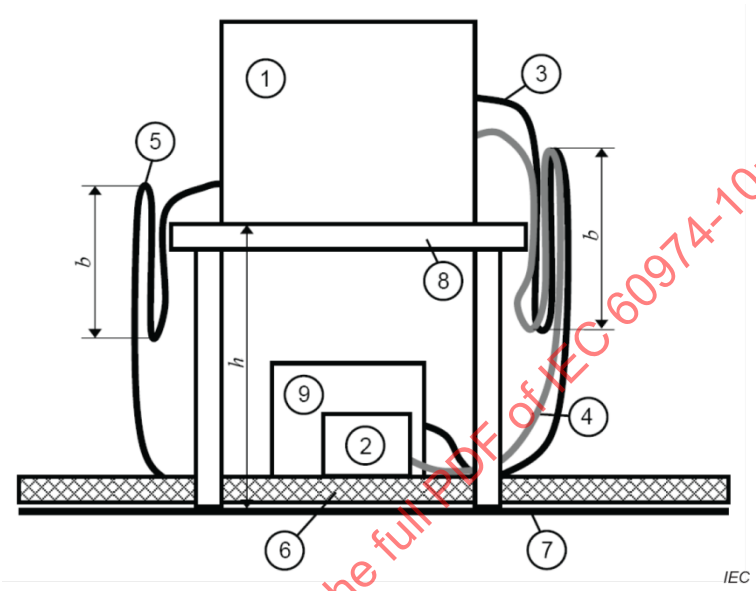

Key

1	Arc welding equipment	6	Insulation
2	Remote control (under the table)	7	Reference ground plane
3	Welding cable (bundled)	8	Non-conductive table
4	Remote control cable (bundled)	9	Conventional load; The load may be placed under or beside the table (under the table)
5	Input supply cable (bundled)		

b Cable bundle length

h Non-conductive table height

NOTE Item 2 is ancillary equipment, as applicable.

Figure 3 – Test set-up 2 for portable arc welding equipment

IECNORM.COM : Click to view the full PDF of IEC 60974-10:2020 RLV

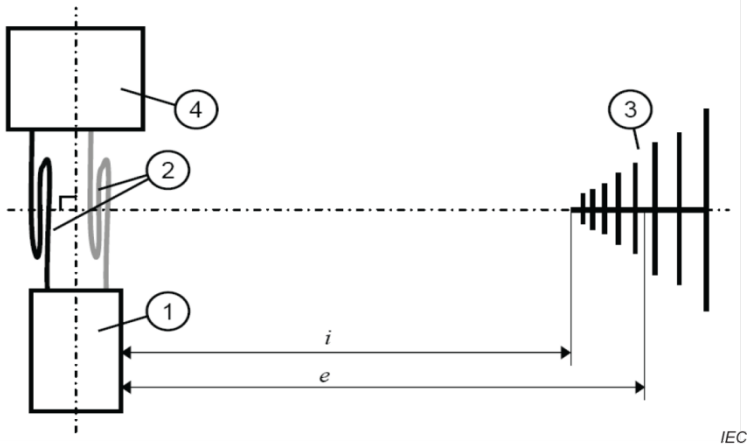

Key

1	Arc welding equipment	3	Test antenna (horizontal polarization shown)
2	Welding cables (bundled)	4	Conventional load or load decoupling network

e Separation distance between the equipment under test and the radiation center of the antenna

i Distance between the equipment under test and nearest point of the antenna

Figure 4 – Top view of test set-up as shown in Figure 2

The welding power source shall be connected to the conventional load by welding cables of suitable cross-section for the welding current, or the appropriate torch or electrode holder with an adapter. The welding cables shall have a minimum length of 2 m.

If a load situated outside the shielded chamber is used, a load-decoupling network as defined in 4.6 shall be placed inside the shielded chamber. The load-decoupling network shall be terminated to the reference ground and connected to the outside load via suitable filters.

For RF emission tests using the test set-up given in Figure 2, the welding power source shall be insulated by an insulating mat (or blocks) not greater than 12 mm thick or insulated by its own under-gear if appropriate.

For electromagnetic radiation disturbance and EM field immunity tests using the test set-up as given in Figure 2, the welding power source and conventional load (or, if applicable, the load-decoupling network) shall be at one stationary position with respect to the test antenna as shown in Figure 4. The separation distance *e* in Figure 4 is defined in 8.3 of CISPR 11:2015 and CISPR 11:2015/AMD1:2016. The separation distance *i* in Figure 4 is defined in IEC 61000-4-3:2006, IEC 61000-4-3:2006/AMD1:2007 and IEC 61000-4-3:2006/AMD2:2010.

The cables shall be allowed to fall naturally to the ground plane. Excess cable length shall be folded to form separate bundles not exceeding 0,4 m in length, as far as practicable.

Specific test set-up geometries for immunity tests can be found in the basic standards referenced in Table 6, Table 7 and Table 8.

The configuration of the equipment under test shall be noted in the test report.

5.2 Load

During the tests, the arc welding operation is simulated by loading the equipment with a conventional load as specified in IEC 60974-1:2017 and IEC 60974-1:2017/AMD1:2019. For RF emission tests that do not use a CDN, the conventional load shall be insulated by an

IECNORM.COM : Click to view the full PDF of IEC 60974-10:2020 RLV

insulating mat (or blocks) not greater than 12 mm thick or insulated by its own under-gear if appropriate.

For the measurement of the output current ripple, the inductance of the load including welding cables at the fundamental frequency shall be less than 10 µH per 100 mΩ total resistance.

5.3 Ancillary equipment

5.3.1 General requirements

Ancillary equipment shall be tested in conjunction with a welding power source. It shall be connected, installed and configured as recommended by the manufacturer.

Specific requirements for the operation of ancillary equipment are given below.

5.3.2 Wire feeders

Wire feeders shall be positioned on or near a welding power source as designed. Wire feeders, which can be located both inside or outside the welding power source enclosure, shall be placed outside. For RF emission tests, wire feeders designed to be placed on the floor shall be insulated from it, by an insulating mat (or blocks) not greater than 12 mm thick or insulated by its own under-gear, if appropriate.

The welding cable connecting the wire feeder to the welding power source shall be 2 m in length or longer, if required, to make the connection and be of suitable current rating. If a welding cable in excess of 2 m is provided by the manufacturer, the excess cable length shall be folded to form a bundle not exceeding 0,4 m in length, as far as practicable. A welding cable connection less than 2 m long shall be permitted if this is supplied with the equipment.

The interconnection cable(s) between the wire feeder and the welding power source shall be of the type and length recommended by the manufacturer. Excess cable length shall be folded to form a bundle not exceeding 0,4 m in length, as far as practicable.

A welding torch, as recommended by the manufacturer, may be used instead of a welding cable to make the connection from the wire feeder to the conventional load.

5.3.3 Remote controls

If a welding power source is capable of operating with a remote control, it shall be tested with the remote control connected, which is expected to give the highest emissions and/or lowest immunity. The remote control shall be placed on, and insulated from, the ground plane beside the load, where possible. For RF emission tests, the insulation shall not be greater than 12 mm thick. Remote controls designed to be attached to the arc welding equipment during use shall be placed as intended. For wireless remote controls, see Annex E.

Excess cable length shall be folded to form a bundle not exceeding 0,4 m in length, as far as practicable.

Complex controls that can be used independently from a dedicated power source may be tested in conjunction with the power source or as a stand-alone unit, as specified by the manufacturer.

5.3.4 Arc striking and stabilizing devices

Arc striking and stabilizing devices shall be disabled during all tests other than RF emission tests to protect test equipment. For RF emission tests, measurements shall be started 5 s after the equipment is in operation.

IECNORM.COM : Click to view the full PDF of IEC 60974-10:2020 RLV

5.3.5 Liquid cooling systems

Liquid cooling systems shall be positioned on or near a welding power source as designed. Liquid cooling systems, which can be located both inside or outside the welding power source enclosure, shall be placed outside. For RF emission tests, liquid cooling systems designed to be placed on the floor shall be insulated from it, by an insulating mat (or blocks) not greater than 12 mm thick or insulated by its own under-gear, if appropriate.

The inlet and outlet may be connected by a hose, as recommended by the manufacturer, to allow the flow of cooling liquid.

6 Emission tests

6.1 Classification for RF emission tests

6.1.1 Class A equipment

Class A equipment is equipment suitable for use in all locations other than those allocated in residential environments and those directly connected to a low voltage power supply network which supplies buildings used for domestic purposes.

Class A equipment shall meet Class A limits in accordance with 6.3.

Arc striking and stabilizing devices and arc stud welding equipment shall be classified as Class A equipment.

6.1.2 Class B equipment

Class B equipment is suitable for use in all locations, including residential locations where the electrical power is provided by the public low-voltage supply system.

Class B equipment shall meet Class B limits in accordance with 6.3.

6.2 Test conditions

6.2.1 Welding power source

6.2.1.1 Test conditions for RF emission tests

The welding power source shall be tested at the conventional load voltages referenced in 6.2.2 under the following output conditions:

a) at rated minimum welding current;

b) at rated welding current at 100 % duty cycle. If no rated current is specified for a 100 % duty cycle, the test shall be carried out at 50 % of I_{2max}.

Additionally, if there is an idle state, the welding power source shall be tested with the cables disconnected at the load.

If the supply current is greater than 25 A at any of the output conditions given above, the output may be reduced to give a supply current of 25 A. However, if a supply current of 25 A or less cannot be achieved, the voltage probe, as specified in 4.4, may be used for tests in accordance with 6.3.2 as an alternative to an artificial mains network.

Welding power sources shall be tested in all operating modes.

NOTE Typical examples for operating modes are AC, DC or pulsed DC.

IECNORM.COM : Click to view the full PDF of IEC 60974-10:2020 RLV

Multi-process welding power sources shall be tested with the conventional load which gives the highest load voltage for the set current. If a welding power source contains more than one output circuit (for example, plasma cutting and manual arc welding), each circuit shall be tested separately.

For power sources with an external wire feeder, only the MIG configuration shall be tested with the MIG conventional load voltage. As an alternative, the MAG configuration can also be used.

6.2.1.2 Test conditions for harmonics

Welding power sources within the scope of IEC 60974-1:2017 and IEC 60974-1:2017/AMD1:2019 shall be tested at the conventional load voltage according to the process as given in 6.2.2 at maximum rated welding current at the rated duty cycle.

The arithmetic average value of 1,5 s smoothed RMS supply current values (I_{ref} as per IEC 61000-3-12:2011) shall be measured when the welding power source is delivering its maximum rated welding current I_{2max}.

For welding equipment within the scope of IEC 60974-1:2017 and IEC 60974-1:2017/AMD1:2019 with a rated maximum supply current below 16 A, the reference current I_{ref} for the definition of limits shall be 16 A.

The maximum and arithmetic average values of 1,5 s smoothed RMS harmonic current values in each discrete Fourier transform (DFT) time window shall be determined over one full thermal cycle of 10 min including the idle state period.

NOTE 1 An idle state period of more than 10 % is not a stand-by mode as defined in IEC 61000-3-12:2011, but an operational mode of the welding equipment within its full thermal cycle.

Welding power sources shall be tested in all modes.

NOTE 2 Typical examples for operating modes are AC, DC or pulsed DC.

Multi-process welding power sources shall be tested with the conventional load which gives the highest conventional load voltage for the set current.

Test conditions for welding power sources within the scope of IEC 60974-6:2015 are given in IEC 61000-3-2:2018.

6.2.1.3 Test conditions for voltage fluctuations and flicker

Test conditions for welding power sources are given in IEC 61000-3-3:2013 and IEC 61000-3-3:2013/AMD1:2017.

NOTE 2 IEC 61000-3-3:2013, Clause A.15 is applicable to equipment with I_{1max} > 16 A.

6.2.1.4 Test conditions for output current ripple

The welding power source shall be tested at the conventional load voltages referenced in 6.2.2 at rated welding current at 100 % duty cycle. If no rated current is specified for a 100 % duty cycle, the test shall be carried out at 50 % of I_{2max}.

The current ripple shall be recorded in the time domain.

6.2.2 Load voltages

Conventional load voltages are given in IEC 60974-1:2017 and IEC 60974-1:2017/AMD1:2019 or IEC 60974-6:2015.

IECNORM.COM : Click to view the full PDF of IEC 60974-10:2020 RLV

6.2.3 Wire feeders

Wire feeders shall be tested at 50 % of the maximum wire feed speed setting, where possible. Pre-programmed and synergic wire feeders shall be tested according to the output setting of the welding power source.

During this test, pressure shall be removed from the drive rolls of the wire feeder and the welding power source shall be loaded as given in 6.2.1.1.

6.2.4 Ancillary equipment

Other ancillary equipment shall be tested according to the manufacturer's recommendations.

6.3 Emission limits

6.3.1 General

Emission limits are designed to reduce the probability of interference but will not in all cases eliminate interference, for example, when the receiving apparatus is in close proximity or has a high degree of sensitivity.

The ability of arc welding equipment to work in a compatible manner with other radio and electronic systems is greatly influenced by the manner in which it is installed and used. For this reason a code of practice is appended to this document (see Annex A), and it is recommended that the arc welding equipment be installed and used in accordance with this code of practice if electromagnetic compatibility is to be achieved.

NOTE The origins of the limit values in this document are summarized in Annex B.

6.3.2 Mains terminal disturbance voltage

6.3.2.1 Idle state

The mains terminal disturbance voltage limits for Class A and Class B arc welding equipment in idle state, are given in Table 1. The appropriate set of limits shall be selected in accordance with the maximum rated input power of the equipment. If the rated input power is not given on the rating plate, it is calculated using the rated maximum supply current I_{1max} and the rated input voltage U_1.

The EUT shall meet either both the average and the quasi-peak limits using corresponding detectors or the average limit when using a quasi-peak detector.

IECNORM.COM : Click to view the full PDF of IEC 60974-10:2020 RLV

Table 1 – Mains terminal disturbance voltage limits, idle state

Frequency range MHz	Class B dBμV		Class A maximum rated input power ≤ 20 kVA dBμV		Class A maximum rated input power > 20 kVA [a] dBμV		Class A maximum rated input power > 75 kVA [b] dBμV	
	Quasi-peak	Average	Quasi-peak	Average	Quasi-peak	Average	Quasi-peak	Average
0,15 to 0,50	66 Decreasing linearly with logarithm of frequency to 56	56 46	79	66	100	90	130	120
0,50 to 5	56	46	73	60	86	76	125	115
5 to 30	60	50	73	60	90 Decreasing linearly with logarithm of frequency to 73	80 60	115	105

At the transition frequency, the more stringent limit shall apply.

[a] These limits apply to equipment with a rated power > 20 kVA and intended to be connected to a dedicated power transformer or generator, and which is not connected to low voltage (LV) overhead power lines. For equipment not intended to be connected to a user specific power transformer the limits for ≤ 20 kV A apply. The manufacturer and/or supplier shall provide information on installation measures that can be used to reduce emissions from the installed equipment. In particular it shall be indicated that this equipment is intended to be connected to a dedicated power transformer or generator and not to LV overhead power lines.

[b] These limits apply only to high power electronic systems and equipment with a rated power greater than 75 kVA when intended to be installed as follows:

– the installation is supplied from a dedicated power transformer or generator, and which is not connected to low voltage (LV) overhead power lines,

– the installation is physically separated from residential environments by a distance greater than 30 m or by a structure which acts as a barrier to radiated phenomena,

– the manufacturer and/or supplier shall indicate that this equipment meets the disturbance voltage limits for high power electronic systems and equipment of rated input power > 75 kVA and provide information on installation measures to be applied by the installer. In particular, it shall be indicated that this equipment is intended to be used in an installation which is powered by a dedicated power transformer or generator and not by LV overhead power lines.

IECNORM.COM : Click to view the full PDF of IEC 60974-10:2020 RLV

6.3.2.2 Loaded

The mains terminal disturbance voltage limits for Class A and Class B arc welding equipment are given in Table 2. The appropriate set of limits shall be selected in accordance with the maximum rated input power of the equipment. If the rated input power is not given on the rating plate, it is calculated using the rated maximum supply current I_{1max} and the rated input voltage U_1.

Table 2 – Mains terminal disturbance voltage limits, load conditions

Frequency range MHz	Class B dBμV		Class A maximum rated input power ≤ 75 kVA [a] dBμV		Class A maximum rated input power > 75 kVA [a, b] dBμV	
	Quasi-peak	Average	Quasi-peak	Average	Quasi-peak	Average
0,15 to 0,50	66 Decreasing linearly with logarithm of frequency to 56	56 46	100	90	130	120
0,50 to 5	56	46	86	76	125	115
5 to 30	60	50	90 Decreasing linearly with logarithm of frequency to 73	80 60	115	105
At the transition frequency, the more stringent limit shall apply. [a] The maximum rated input power is calculated using the rated maximum supply current I_{1max}. [b] The manufacturer and/or supplier shall provide information on installation measures that can be used to reduce emissions from the installed equipment.						

The EUT shall meet either both the average and the quasi-peak limits using corresponding detectors or the average limit when using a quasi-peak detector.

For Class A equipment impulse noise (clicks) which occurs less than 5 times per minute is not considered.

For Class B equipment impulse noise (clicks) which occurs less than 0,2 times per minute a relaxation of the limits of 44 dB is allowed.

For clicks appearing between 0,2 times and 30 times per minute, a relaxation of the limits of 20 log (30/N) dB is allowed (where N is the number of clicks per minute). Criteria for separated clicks can be found in CISPR 14-1:2016.

6.3.3 Conducted emissions at signal, control and measurement ports

Class A equipment shall comply with the limits in Table 5 of IEC 61000-6-4:2018.

Class B equipment shall comply with the limits for the telecommunications/network ports in Table 4 of IEC 61000-6-3:2006/AMD1:2010.

These requirements apply only to PORTS that connect the welding system to external equipment (e.g. wired network ports).

These requirements do not apply to PORTS designed exclusively for interconnection of equipment within the welding system (e.g. wire feeders, welding torches, gas consoles, other power sources, remote controls).

6.3.4 Output current ripple

The output current ripple of Class B arc welding power sources shall comply with the limits given in Table 3.

IECNORM.COM : Click to view the full PDF of IEC 60974-10:2020 RLV

NOTE The permissible peak-peak value is selected based on the fundamental frequency of the output current ripple. Compliance with this value at the fundamental frequency, which can be below the frequency range where limits for the magnetic field strength are defined, ensures compliance of all spectral components.

Table 3 – Output current ripple limits for Class B arc welding power sources

Frequency range MHz	**Current ripple amplitude in time domain** dBA[a] peak-peak
0,01 to 0,150	55,6 Decreasing linearly with logarithm of frequency to 8,6
0,150 to 30	8,6 Decreasing linearly with logarithm of frequency to -27,4
a dBA is a logarithmic unit where 0 dBA represents a current of 1 A.	

6.3.5 Electromagnetic radiation disturbance

6.3.5.1 Idle state

The electromagnetic radiation disturbance limits for Class A and Class B arc welding equipment in idle state are given in Table 4.

Table 4 – Electromagnetic radiation disturbance – Idle state

Frequency range MHz	**Class B Quasi-peak** dBμV/m			**Class A Quasi-peak** dBμV/m		
	OATS or SAC		FAR [b]	OATS or SAC		FAR [b]
	10 m measuring distance	3 m measuring distance [a]		10 m measuring distance	3 m measuring distance [a]	
30 to 230	30	40	42 to 35	40	50	52 to 45
230 to 1 000	37	47	42	47	57	52

On an OATS or in a SAC, class A equipment can be measured at a nominal distance of 3 m, 10 m or 30 m. In case of measurements at a separation distance of 30 m, an inverse proportionality factor of 20 dB per decade shall be used to normalize the measured data to the specified distance for determining compliance.

At the transition frequency, the more stringent limit shall apply. In the frequency range 30 MHz to 230 MHz, the limit for measurements in the FAR decreases linearly with the logarithm of frequency.

A 20 dB relaxation applies to Class A equipment with a rated power of > 20 kVA and intended to be used at locations where there is a distance greater than 30 m between the equipment and third party sensitive radio communications. The manufacturer shall indicate in the technical documentation that this equipment is intended to be used at locations where the separation distance to third party sensitive radio services is > 30 m. If these conditions are not met, then the relaxation does not apply.

[a] The limits specified for the 3 m separation distance apply only to small equipment meeting the size criterion defined in 3.10.

[b] The table-top equipment shall fit into the test volume of the FAR.

IECNORM.COM : Click to view the full PDF of IEC 60974-10:2020 RLV

6.3.5.2 Loaded

The electromagnetic radiation disturbance limits for Class A and Class B arc welding equipment are the limits given in Table 5.

Table 5 – Electromagnetic radiation disturbance – Loaded state

Frequency range MHz	Class B Quasi-peak dBμV/m			Class A Quasi-peak dBμV/m		
	OATS or SAC		FAR [b]	OATS or SAC		FAR [b]
	10 m measuring distance	3 m measuring distance [a]		10 m measuring distance	3 m measuring distance [a]	
30	30	40	42	80	90	102
> 30 to 80,872			42 to 39	Decreasing linearly with logarithm of frequency to		
80,872 to 81,848			39			
81,848 to 134,786			39 to 37			
134,786 to 136,414			37			
136,414 to ≤ 230			37 to 35	60	70	75
> 230 to 1 000	37	47	42	60	70	75

On an OATS or in a SAC, Class A equipment can be measured at a nominal distance of 3 m, 10 m or 30 m. In case of measurements at a separation distance of 30 m, an inverse proportionality factor of 20 dB per decade shall be used to normalize the measured data to the specified distance for determining compliance.

[a] The limits specified for the 3 m separation distance apply only to small equipment meeting the size criterion defined in 3.10.

[b] The table-top equipment shall fit into the test volume of the FAR.

6.3.6 Harmonics, voltage fluctuations and flicker

The limits for

a) harmonic current emissions are given in IEC 61000-3-2:2018 and IEC 61000-3-12:2011,

b) voltage fluctuations and flicker are given in IEC 61000-3-3:2013 and IEC 61000-3-3:2013/AMD1:2017 and IEC 61000-3-11:2017,

and are applicable to arc welding equipment with a supply current I_{1max} up to 75 A, as given in Figure 5 and Figure 6.

NOTE 1 IEC TS 61000-3-4:1998 can be used to guide the parties concerned by the installation of arc welding equipment with an supply current I_{1max} above 75 A in a low-voltage network.

NOTE 2 IEC 61000-3-3:2013, Clause A.15, is applicable to equipment with I_{1max} > 16 A.

IECNORM.COM : Click to view the full PDF of IEC 60974-10:2020 RLV

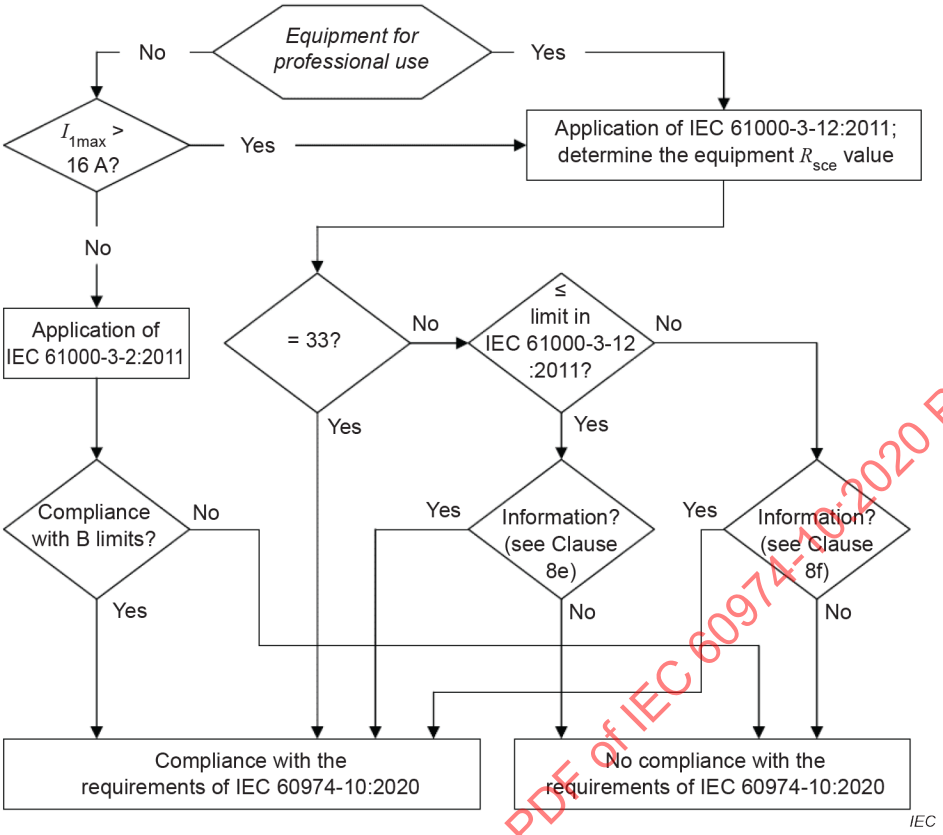

Figure 5 – Overview of harmonic requirements for supply current I_{1max} up to 75 A

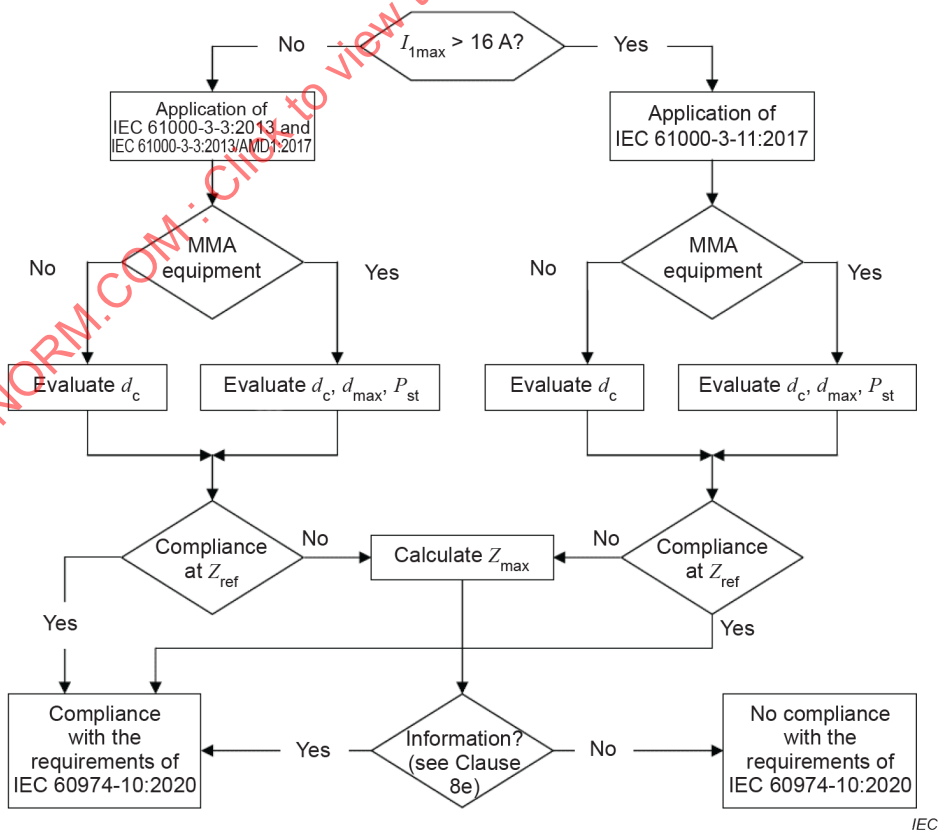

Figure 6 – Overview of flicker requirements

IECNORM.COM : Click to view the full PDF of IEC 60974-10:2020 RLV

7 Immunity tests

7.1 Classification for immunity tests

7.1.1 Applicability of tests

Arc welding equipment covered by this document is sub-divided into categories for the purpose of immunity requirements as given below. Category 1 arc welding equipment is considered to meet the necessary immunity requirements without testing. Category 2 arc welding equipment shall fulfil the requirements of 7.4.

7.1.2 Category 1 equipment

Category 1 equipment includes arc welding equipment not containing electronic control circuitry, for example, transformers, transformer rectifiers, passive remote controls, liquid cooling systems, CO_2-heaters and non-electronic wire feeders.

Electric circuits consisting of passive components such as inductors, RF suppression networks, mains frequency transformers, rectifiers, diodes and resistors are not considered to be electronic control circuitry.

7.1.3 Category 2 equipment

Category 2 equipment includes all arc welding equipment excluded from Category 1 above.

7.2 Test conditions

Welding power sources shall be tested during no-load and loaded operation at the welding current corresponding to a 100 % duty cycle, when delivering current into a conventional load in accordance with 6.2.2.

If the supply current is greater than 25 A at any of the output conditions given above, the output may be reduced to give a supply current of 25 A.

Compliance shall be checked by measuring the no-load voltage (for the no-load test) and the mean value of the welding current (for the loaded operation test).

Wire feeders shall be tested at 50 % of the maximum setting. The speed of the wire feeder shall be measured using a tacho-generator on a drive roll or by using other equivalent means.

NOTE To carry out this test, pressure is removed from the drive rolls.

7.3 Immunity performance criteria

7.3.1 Performance criterion A

The arc welding equipment shall continue to operate as intended. A variation in welding current, wire feed speed and travel speed of ±10 % of the setting is permitted. All controls shall continue to function and, in particular, it shall be possible to terminate the welding current using the normal switch provided, for example, the switch on a metal inert/active gas welding torch or foot control. No loss of stored data is permitted. After the test the output shall return to the original setting. Under no circumstances shall the no-load voltage exceed those values given in IEC 60974-1:2017 and IEC 60974-1:2017/AMD1:2019.

IECNORM.COM : Click to view the full PDF of IEC 60974-10:2020 RLV

7.3.2 Performance criterion B

A variation in welding current, wire feed speed and travel speed of $^{+50}_{-100}$ % is permitted (in practice this may result in the arc extinguishing, in which case the arc may be reinitiated by the operator using the normal means). It shall be possible to terminate the welding current using the normal switch provided, for example the switch on a metal inert/active gas welding torch or foot control. No loss of stored data is permitted. After the test the output shall return to the original setting. Under no circumstances shall the no-load voltage exceed those values given in IEC 60974-1:2017 and IEC 60974-1:2017/AMD1:2019.

7.3.3 Performance criterion C

Temporary loss of function is permitted, requiring the arc welding equipment to be reset manually, for example by switching it off and on.

No loss of stored data is permitted unless it can be restored by the operation of the controls. Under no circumstances shall the no-load voltage exceed those values given in IEC 60974-1:2017 and IEC 60974-1:2017/AMD1:2019.

7.4 Immunity levels

Immunity requirements are given in Table 6 for the enclosure, Table 7 for the AC input power port and Table 8 for ports for measurement and control lines.

Table 6 – Immunity levels – Enclosure

Phenomena		Units	Test specification	Basic standard	Remarks	Performance criteria
Radiofrequency EM field, amplitude modulated		MHz V/m (unmod. RMS) % AM (1 kHz)	80 to 1 000 10 80	IEC 61000-4-3: 2006/AMD1: 2007/AMD2: 2010	The test level specified is prior to modulation	A
Radiofrequency EM field, amplitude modulated		GHz V/m (unmod. RMS) % AM (1 kHz)	1,4 to 6,0 3 80	IEC 61000-4-3: 2006/AMD1: 2007/AMD2: 2010	The test level specified is the RMS value of the unmodulated carrier	A
Electrostatic discharge	Contact discharge	kV (charge voltage)	±4 [a]	IEC 61000-4-2: 2008	See basic standard for applicability of contact and/or air discharge test	B
	Air discharge	kV (charge voltage)	±8 [a]			B

[a] Testing is not required at lower levels than those specified.

IECNORM.COM : Click to view the full PDF of IEC 60974-10:2020 RLV

Table 7 – Immunity levels – AC input power port

Phenomena	Units	Test specification	Basic standard	Remarks	Performance criteria
Fast transients	kV (peak) Repetition frequency kHz Tr/Th ns	±2 5 or 100 5/50	IEC 61000-4-4: 2012	f	B
Radio-frequency common mode	MHz V (unmod. RMS) % AM (1 kHz)	0,15 to 80 10 80	IEC 61000-4-6: 2013	The test level specified is the RMS value of the unmodulated carrier a	A
Surges line-to-line line-to-earth	Tr/Th µs kV (open-circuit voltage) kV (open-circuit voltage)	1,2/50 (8/20) ±1 ±2	IEC 61000-4-5: 2014/AMD1: 2017	d, g	B
Voltage dips	% residual voltage cycles at 50/60Hz	70 25/30	IEC 61000-4-11: 2004/AMD1: 2017 IEC 61000-4-34: 2005/AMD1: 2009	Voltage shift at zero crossings b, c, e	C
	% residual voltage cycles at 50/60Hz	40 10/12			C
	% residual voltage cycle	0 1			B

a The test level can also be defined as the equivalent current into a 150 Ω load.

b Applicable only to input PORTS.

c For electronic power converters, the operation of protective devices (e.g. undervoltage protection) and the performance criterion C are allowed.

d For supply voltages where no test equipment is commercially available (e.g. CDNs), this test is not required.

e The test shall be carried out at the frequencies appropriate to the power supply frequency. Equipment intended to be used in regions where only one of these frequencies is applied needs to be tested at this specific frequency only.

f The test may be performed at one or at both repetition frequencies. The use of 5 kHz repetition frequency is traditional; however, 100 kHz is closer to reality.

g In cases where a manufacturer's specification requires external protection devices or measures which are clearly specified in the user's manual, the test requirements of this document shall be applied with the external protection devices or measures in place.

IECNORM.COM : Click to view the full PDF of IEC 60974-10:2020 RLV

Table 8 – Immunity levels – Ports for process, signalling, measurement and control

Phenomena	Units	Test specification	Basic standard	Remarks	Performance criteria
Fast transients	kV (peak) Tr/Th ns Repetition frequency kHz	±2 5/50 5	IEC 61000-4-4: 2012	Capacitive clamp used [b, f]	B
Radio-frequency common mode	MHz V (unmod. RMS) % AM (1kHz)	0,15 to 80 10 80	IEC 61000-4-6: 2013	The test level specified is the RMS value of the unmodulated carrier [a, b]	A
Surge line-to-line line-to-earth	Tr/Th µs kV (open-circuit voltage) kV (open-circuit voltage)	1,2/50 0,5[a] ±1	IEC 61000-4-5: 2014/AMD1: 2017	[c, d, e]	B

[a] The test level can also be defined as the equivalent current into a 150 Ω load.

[b] Applicable only to PORTS interfacing with cables whose total length according to the manufacturer's functional specification may exceed 3 m.

[c] Applicable only to PORTS interfacing with long distance lines. A long distance line is a line connected to a signal/control port and which inside a building is longer than 30 m, or which leaves the building (including a line installed outdoors).

[d] Where normal functioning cannot be achieved because of the impact of the coupling/decoupling network (CDN) on the EUT, the test shall be done with the reduced functionality. A rationale shall be given in the test report for doing so. After the test and the removal of the CDN, the normal function shall not be affected.

[e] Signal ports directly connected to AC power network shall be treated as AC power ports.

[f] The test may be performed at one or at both repetition frequencies. The use of 5 kHz repetition frequency is traditional; however, 100 kHz is closer to reality.

8 Documentation for the purchaser/user

The documentation made available to the purchaser/user prior to the purchase shall clearly indicate restrictions for use, due to:

a) the RF equipment class (Class A or Class B);

b) low-frequency (LF) requirements for the public low voltage supply network connection.

Symbol 1 given in Annex C is recommended to be used for Class A equipment to indicate the RF equipment class and restrictions for use.

Symbol 2 given in Annex C is recommended to be used to indicate restrictions for use due to LF requirements for the public low voltage supply network connection.

The user shall be made aware of the fact that proper installation and use of the arc welding equipment is necessary to minimize possible interfering emissions.

The welding power source shall include instructions and information as follows.

a) For Class B equipment, a written statement that Class B equipment complies with electromagnetic compatibility requirements in industrial and residential environments, including residential locations where the electrical power is provided by the public low-voltage supply system.

IECNORM.COM : Click to view the full PDF of IEC 60974-10:2020 RLV

b) For Class A equipment the following warning or its equivalent shall be included in the instruction manual:

This Class A equipment is not intended for use in residential locations where the electrical power is provided by the public low-voltage supply system. There can be potential difficulties in ensuring electromagnetic compatibility in those locations, due to conducted as well as radiated radio-frequency disturbances.

c) If the equipment with an input current below 75 A per phase is intended to be connected to public low voltage systems, and it does comply with IEC 61000-3-11:2017 or IEC 61000-3-12:2011 based on system impedance restrictions, the information given in the next paragraph or its equivalent shall be included in the instruction manual. The restriction shall be given as the lower value of the permissible system impedances (in mΩ) or the higher value of the required short circuit power (in MVA) resulting from tests in accordance with these standards. The impedance value may be calculated from the short circuit power value and vice versa.

Provided that the public low voltage system impedance at the point of common coupling is lower than XX mΩ (or the short circuit power is higher than XX MVA), this equipment is compliant with IEC 61000-3-11:2017 and IEC 61000-3-12:2011 and can be connected to public low voltage systems. It is the responsibility of the installer or user of the equipment to ensure, by consultation with the distribution network operator if necessary, that the system impedance complies with the impedance restrictions.

d) If the equipment with an input current below 75 A per phase is intended to be connected to public low voltage systems, and it does not comply with IEC 61000-3-12:2011 the following information or its equivalent shall be included in the instruction manual:

This equipment does not comply with IEC 61000-3-12:2011. If it is connected to a public low voltage system, it is the responsibility of the installer or user of the equipment to ensure, by consultation with the distribution network operator, that the equipment may be connected.

e) Information on any special measures that have to be taken to achieve compliance, for example the use of shielded cables.

f) Recommendations on the assessment of the surrounding area, to identify necessary precautions required for the installation and use, to minimize disturbances; see Clause A.2 and Clause A.3.

g) Recommendations on methods to minimize disturbances; see Clause A.4.

h) A statement drawing attention to the user's responsibility with respect to interference from welding.

IECNORM.COM : Click to view the full PDF of IEC 60974-10:2020 RLV

Annex A
(informative)

Installation and use

A.1 General

The user is responsible for installing and using the arc welding equipment according to the manufacturer's instructions. If electromagnetic disturbances are detected, then it shall be the responsibility of the user of the arc welding equipment to resolve the situation with the technical assistance of the manufacturer. In some cases this remedial action may be as simple as earthing the welding circuit (see note). In other cases, it could involve constructing an electromagnetic screen enclosing the welding power source and the work complete with associated input filters. In all cases electromagnetic disturbances shall be reduced to the point where they are no longer troublesome.

NOTE The practice for earthing the welding circuit is dependent on local safety regulations. Changing the earthing arrangements to improve EMC can affect the risk of injury or equipment damage. Further guidance is given in IEC 60974-9:2018.

A.2 Assessment of area

Before installing arc welding equipment the user shall make an assessment of potential electromagnetic problems in the surrounding area. The following shall be taken into account:

a) other supply cables, control cables, signalling and telephone cables above, below and adjacent to the arc welding equipment;

b) radio and television transmitters and receivers;

c) computer and other control equipment;

d) safety critical equipment, for example guarding of industrial equipment;

e) the health of the people around, for example the use of pacemakers and hearing aids;

f) equipment used for calibration or measurement;

g) the immunity of other equipment in the environment. The user shall ensure that other equipment being used in the environment is compatible. This may require additional protection measures;

h) the time of day that welding or other activities are to be carried out.

The size of the surrounding area to be considered will depend on the structure of the building and other activities that are taking place. The surrounding area may extend beyond the boundaries of the premises.

A.3 Assessment of welding installation

In addition to the assessment of the area, the assessment of arc welding installations may be used to evaluate and resolve cases of interference. An emission assessment should include *in situ* measurements as specified in Clause 10 of CISPR 11:2015/AMD1:2016. *In situ* measurements may also be used to confirm the efficiency of mitigation measures.

IECNORM.COM : Click to view the full PDF of IEC 60974-10:2020 RLV

A.4 Mitigation measures

A.4.1 Public supply system

Arc welding equipment should be connected to the public supply system according to the manufacturer's recommendations. If interference occurs, it may be necessary to take additional precautions such as filtering of the public supply system. Consideration should be given to shielding the supply cable of permanently installed arc welding equipment, in metallic conduit or equivalent. Shielding should be electrically continuous throughout its length. The shielding should be connected to the welding power source so that good electrical contact is maintained between the conduit and the welding power source enclosure.

A.4.2 Maintenance of the arc welding equipment

The arc welding equipment should be routinely maintained according to the manufacturer's recommendations. All access and service doors and covers should be closed and properly fastened when the arc welding equipment is in operation. The arc welding equipment should not be modified in any way, except for those changes and adjustments covered in the manufacturer's instructions. In particular, the spark gaps of arc striking and stabilising devices should be adjusted and maintained according to the manufacturer's recommendations.

A.4.3 Welding cables

The welding cables should be kept as short as possible and should be positioned close together, running at or close to the floor level.

A.4.4 Equipotential bonding

Bonding of all metallic objects in the surrounding area should be considered. However, metallic objects bonded to the work piece will increase the risk that the operator could receive an electric shock by touching these metallic objects and the electrode at the same time. The operator should be insulated from all such bonded metallic objects.

A.4.5 Earthing of the workpiece

Where the workpiece is not bonded to earth for electrical safety, nor connected to earth because of its size and position, for example, a ship's hull or building steelwork, a connection bonding the workpiece to earth may reduce emissions in some, but not all instances. Care should be taken to prevent the earthing of the workpiece increasing the risk of injury to users or damage to other electrical equipment. Where necessary, the connection of the workpiece to earth should be made by a direct connection to the workpiece, but in some countries where direct connection is not permitted, the bonding should be achieved by suitable capacitance, selected according to national regulations.

A.4.6 Screening and shielding

Selective screening and shielding of other cables and equipment in the surrounding area may alleviate problems of interference. Screening of the entire welding area may be considered for special applications.

IECNORM.COM : Click to view the full PDF of IEC 60974-10:2020 RLV

Annex B
(informative)

Limits

B.1 General

Annex B provides information on the origin of the limits given in the main part of this document.

B.2 Conducted disturbance voltage limits

The limits given in the normative part of this document originate from the limits in CISPR 11:2015, CISPR 11:2015/AMD1:2016 and CISPR 11:2015/AMD2:2019.

The conducted disturbance voltage limits for the idle-state in table 1 originate from the limits in Tables 2 and 4 in CISPR 11:2015, CISPR 11:2015/AMD1:2016 and CISPR 11:2015/AMD2:2019.

The conducted disturbance voltage limits for the loaded-state in table 2 originate from the limits in Tables 8 and 9 in CISPR 11:2015, CISPR 11:2015/AMD1:2016 and CISPR 11:2015/AMD2:2019.

B.3 Output current ripple limit

The application of these limits to the peak-peak amplitude of the output current ripple ensures compliance with the limits for magnetic field emissions at a protection distance of 10 m from the welding circuit in the range from 150 kHz to 30 MHz as given in CISPR 11:2015, CISPR 11:2015/AMD1:2016 and CISPR 11:2015/AMD2:2019.

B.4 Radiated disturbance limits

The electromagnetic radiation disturbance limits in Table 4 for the idle-state are based on the group 1 limits in Tables 6 and 7 in CISPR 11:2015, CISPR 11:2015/AMD1:2016 and CISPR 11:2015/AMD2:2019.

The electromagnetic radiation disturbance limits in table 5 for the loaded-state of Class B arc welding equipment are based on the Group 2 limits given in Table 12 of CISPR 11:2015, CISPR 11:2015/AMD1:2016 and CISPR 11:2015/AMD2:2019.

The 20 dB relaxations in the frequency ranges 80,872 MHz to 81,848 MHz and 134,786 MHz to 136,414 MHz are not applicable to arc welding equipment.

The electromagnetic radiation disturbance limits in table 5 for the loaded state of Class A arc welding equipment in the frequency band 30 MHz to 1 000 MHz are based on the limits for class A EDM and arc welding equipment given in Table 11 of CISPR 11:2015, CISPR 11:2015/AMD1:2016 and CISPR 11:2015/AMD2:2019.

B.5 Output current ripple limits

The limits for the output current ripple were introduced in IEC 60794-10:2014/AMD1:2015.

IECNORM.COM : Click to view the full PDF of IEC 60974-10:2020 RLV

Annex C
(informative)

Symbols

Table C.1 provides symbols for the indication of the RF equipment class and restrictions for use.

Table C.1 – Symbols to describe EMC properties

N°	SOURCE	SYMBOL	FUNCTION, KEYWORD OR PHRASE	APPLICATION
1.	IEC 60417-5109 (2002-10)		Not to be used in residential locations where the electrical power is provided by the public low-voltage supply system	To identify Class A equipment and restrictions for use NOTE Symbol can be used on packaging, equipment or documentation for purchaser or user available prior to purchase
2.	IEC 60417-5939 (2002-10) and ISO 7000-0434A (2004-01) combined	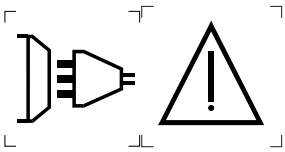	Restrictions for the connection to public low voltage supply networks apply	To identify restrictions of use with regard to required supply network parameters NOTE Symbol can be used on packaging, equipment or documentation for purchaser or user available prior to purchase

IECNORM.COM : Click to view the full PDF of IEC 60974-10:2020 RLV

Annex D
(normative)

Battery powered equipment

D.1 General

Annex D defines additional requirements for the welding equipment powered by internal or external batteries.

The equipment shall comply with the requirements in this document in all modes of operation.

D.2 Additional emission requirements

Any DC input power port of the welding equipment shall comply with the applicable conducted emissions limits for DC power ports of:

- Table 3 of IEC 61000-6-3:2006/AMD1:2010 for Class B equipment

NOTE Annex A of IEC 61000-6-4:2018 contains information on proposed requirements for the DC power PORT of Class A equipment.

External chargers shall comply with the applicable limits in:

- Tables 3, 4 and 5 of IEC 61000-6-4:2018 if used to charge Class A welding equipment
- Tables 1, 2, 3 and 4 of IEC 61000-6-3:2006/AMD1:2010 if used to charge Class B welding equipment

If a battery charger is intended to be used for both Class A and Class B welding equipment, the charger shall comply with the more stringent limits.

NOTE IEC 61000-6-3:2006 and IEC 61000-6-3:2006/AMD1:2010 and IEC 61000-6-4:2018 consider the highest internal frequency as well as the length of the connected cable to the DC power port.

D.3 Additional immunity requirements

Any DC input power port shall comply with the applicable immunity requirements for DC power ports of:

- Table 3 of IEC 61000-6-2:2016 for Class A equipment
- Table 3 of IEC 61000-6-1:2016 for Class B equipment

External chargers shall comply with:

- Tables 1, 2, 3 and 4 of IEC 61000-6-2:2016 if used to charge Class A welding equipment
- Tables 1, 2, 3 and 4 of IEC 61000-6-1:2016 if used to charge Class B welding equipment

If a battery charger is intended to be used for both Class A and Class B welding equipment, the charger shall be tested to the higher test levels.

NOTE IEC 61000-6-1:2016 and IEC 61000-6-2:2016 consider the highest internal frequency as well as the length of the connected cable to the DC power port.

IECNORM.COM : Click to view the full PDF of IEC 60974-10:2020 RLV

Annex E
(normative)

Equipment containing radio devices

E.1 General

Annex E defines additional requirements for welding equipment containing radio devices.

The welding equipment shall comply with any additional requirement in the applicable radio standard not specified in this document.

NOTE Examples are requirements regarding the antenna port.

The radio device shall comply with the applicable radio standard.

Exclusion bands specified in the applicable radio standard only apply to the radio functionality.

E.2 Additional emission requirements

For frequency ranges not defined in this document, the welding equipment shall comply with the applicable radiated emissions limits for the enclosure PORT of

- Table 3 of IEC 61000-6-4:2018 for Class A equipment
- Table 1 of IEC 61000-6-3:2006/AMD1:2010 for Class B equipment

For the radiated emission the transmitter function of the radio device is turned off.

E.3 Additional immunity requirements

The performance criterion C shall be applied to the radio function.

If an immunity test would cause damage to a radio receiver, additional mitigation measures shall be applied. These measures shall be documented in the test report. The documentation to the user shall indicate ports sensitive to these phenomena.

IECNORM.COM : Click to view the full PDF of IEC 60974-10:2020 RLV

Bibliography

IEC 60050-131:2002, *International Electrotechnical Vocabulary (IEV) – Part 131: Circuit theory*

IEC 60050-151:2001, *International Electrotechnical Vocabulary (IEV) – Part 151: Electrical and magnetic devices*

IEC 60050-161:1990, *International Electrotechnical Vocabulary (IEV) – Part 161 : Electromagnetic compatibility*

IEC 60050-851:2008, *International Electrotechnical Vocabulary (IEV) – Part 851: Electric welding*

IEC 60417, *Graphical symbols for use on equipment* (available at http://www.graphical-symbols.info/equipment)

IEC 60974-9:2018, *Arc welding equipment – Part 9:Installation and use*

IEC TS 61000-3-4:1998, *Electromagnetic compatibility (EMC) – Part 3-4: Limits – Limitation of emission of harmonic currents in low-voltage power supply systems for equipment with rated current greater than 16 A*

IEC Guide 107:2014, *Electromagnetic compatibility – Guide to the drafting of electromagnetic compatibility publications*

ISO 7000:2019, *Graphical symbols for use on equipment – Registered symbols*

CISPR 32:2015, *Electromagnetic compatibility of multimedia equipment – Emission requirements*
CISPR 32:2015/AMD1:2019

IECNORM.COM : Click to view the full PDF of IEC 60974-10:2020 RLV

IECNORM.COM : Click to view the full PDF of IEC 60974-10:2020 RLV

SOMMAIRE

AVANT-PROPOS 41
1 Domaine d'application 43
2 Références normatives 43
3 Termes et définitions 45
4 Exigences générales d'essai 48
4.1 Conditions d'essai 48
4.2 Instruments de mesure 48
4.3 Réseau fictif 48
4.4 Sonde de tension 48
4.5 Antennes 49
4.6 Dispositif de couplage et de découplage (CDN) 49
5 Montage d'essai d'émission et d'immunité 49
5.1 Généralités 49
5.2 Charge 52
5.3 Matériels auxiliaires 52
5.3.1 Exigences générales 52
5.3.2 Dévidoirs 53
5.3.3 Commandes à distance 53
5.3.4 Systèmes d'amorçage et de stabilisation de l'arc 53
5.3.5 Systèmes de refroidissement par liquide 53
6 Essais d'émission 54
6.1 Classification pour les essais d'émission RF 54
6.1.1 Matériel de Classe A 54
6.1.2 Matériel de Classe B 54
6.2 Conditions d'essai 54
6.2.1 Source de courant de soudage 54
6.2.2 Tensions de charge 56
6.2.3 Dévidoirs 56
6.2.4 Matériels auxiliaires 56
6.3 Limites d'émission 56
6.3.1 Généralités 56
6.3.2 Tension perturbatrice aux bornes du réseau 56
6.3.3 Émissions conduites aux accès par les bornes de signaux, de commande et de mesure 58
6.3.4 Ondulation du courant de sortie 59
6.3.5 Rayonnement électromagnétique perturbateur 59
6.3.6 Harmoniques, fluctuations de tension et papillotement 61
7 Essais d'immunité 63
7.1 Classification pour les essais d'immunité 63
7.1.1 Applicabilité des essais 63
7.1.2 Matériel de Catégorie 1 63
7.1.3 Matériel de Catégorie 2 63
7.2 Conditions d'essai 64
7.3 Critères de performance en immunité 64
7.3.1 Critère de performance A 64
7.3.2 Critère de performance B 64

IECNORM.COM : Click to view the full PDF of IEC 60974-10:2020 RLV

7.3.3 Critère de performance C 64
7.4 Niveaux d'immunité 64
8 Documentation pour l'acheteur/utilisateur 67
Annexe A (informative) Installation et utilisation 69
A.1 Généralités 69
A.2 Évaluation de la zone 69
A.3 Évaluation de l'installation de soudage 69
A.4 Mesures d'atténuation 70
A.4.1 Réseau public d'alimentation 70
A.4.2 Maintenance du matériel de soudage à l'arc 70
A.4.3 Câbles de soudage 70
A.4.4 Liaison équipotentielle 70
A.4.5 Mise à la terre de la pièce à souder 70
A.4.6 Protection et blindage 70
Annexe B (informative) Limites 71
B.1 Généralités 71
B.2 Limites de la tension perturbatrice conduite 71
B.3 Limites d'ondulation du courant de sortie 71
B.4 Limites des perturbations rayonnées 71
B.5 Limites d'ondulation du courant de sortie 72
Annexe C (informative) Symboles 73
Annexe D (normative) Matériel alimenté par batteries 74
D.1 Généralités 74
D.2 Exigences d'émission supplémentaires 74
D.3 Exigences d'immunité supplémentaires 74
Annexe E (normative) Matériel contenant des dispositifs radioélectriques 76
E.1 Généralités 76
E.2 Exigences d'émission supplémentaires 76
E.3 Exigences d'immunité supplémentaires 76
Bibliographie 77

Figure 1 – Exemples d'accès 47
Figure 2 – Montage d'essai 1 pour le matériel de soudage à l'arc 50
Figure 3 – Montage d'essai 2 dans le cas d'un matériel de soudage à l'arc portable 51
Figure 4 – Vue de dessus du montage d'essai représenté à la Figure 2 51
Figure 5 – Présentation des exigences concernant les harmoniques pour un courant d'alimentation I_{1max} allant jusqu'à 75 A 62
Figure 6 – Présentation des exigences concernant le papillotement 63

Tableau 1 – Limites de la tension perturbatrice aux bornes du réseau, etat de repos 57
Tableau 2 – Limites de la tension perturbatrice aux bornes du réseau, en charge 58
Tableau 3 – Limites de l'ondulation du courant de sortie pour les sources de courant de soudage de Classe B 59
Tableau 4 – Limites du rayonnement électromagnétique perturbateur – Etat de repos 60
Tableau 5 – Limites du rayonnement électromagnétique perturbateur – En charge 61
Tableau 6 – Niveaux d'immunité – Enveloppe 65

IECNORM.COM : Click to view the full PDF of IEC 60974-10:2020 RLV

Tableau 7 – Niveaux d'immunité – Accès par les bornes d'alimentation en courant alternatif 66
Tableau 8 – Niveaux d'immunité – Accès par les bornes de processus, de signalisation, de mesure et de commande 67
Tableau C.1 – Symboles de description des propriétés CEM 73

IECNORM.COM : Click to view the full PDF of IEC 60974-10:2020 RLV

COMMISSION ÉLECTROTECHNIQUE INTERNATIONALE

MATÉRIEL DE SOUDAGE À L'ARC –

Partie 10: Exigences de compatibilité électromagnétique (CEM)

AVANT-PROPOS

1) La Commission Électrotechnique Internationale (IEC) est une organisation mondiale de normalisation composée de l'ensemble des comités électrotechniques nationaux (Comités nationaux de l'IEC). L'IEC a pour objet de favoriser la coopération internationale pour toutes les questions de normalisation dans les domaines de l'électricité et de l'électronique. À cet effet, l'IEC – entre autres activités – publie des Normes internationales, des Spécifications techniques, des Rapports techniques, des Spécifications accessibles au public (PAS) et des Guides (ci-après dénommés « Publication(s) de l'IEC »). Leur élaboration est confiée à des comités d'études, aux travaux desquels tout Comité national intéressé par le sujet traité peut participer. Les organisations internationales, gouvernementales et non gouvernementales, en liaison avec l'IEC, participent également aux travaux. L'IEC collabore étroitement avec l'Organisation Internationale de Normalisation (ISO), selon des conditions fixées par accord entre les deux organisations.
2) Les décisions ou accords officiels de l'IEC concernant les questions techniques représentent, dans la mesure du possible, un accord international sur les sujets étudiés, étant donné que les Comités nationaux de l'IEC intéressés sont représentés dans chaque comité d'études.
3) Les Publications de l'IEC se présentent sous la forme de recommandations internationales et sont agréées comme telles par les Comités nationaux de l'IEC. Tous les efforts raisonnables sont entrepris afin que l'IEC s'assure de l'exactitude du contenu technique de ses publications; l'IEC ne peut pas être tenue responsable de l'éventuelle mauvaise utilisation ou interprétation qui en est faite par un quelconque utilisateur final.
4) Dans le but d'encourager l'uniformité internationale, les Comités nationaux de l'IEC s'engagent, dans toute la mesure possible, à appliquer de façon transparente les Publications de l'IEC dans leurs publications nationales et régionales. Toutes divergences entre toutes Publications de l'IEC et toutes publications nationales ou régionales correspondantes doivent être indiquées en termes clairs dans ces dernières.
5) L'IEC elle-même ne fournit aucune attestation de conformité. Des organismes de certification indépendants fournissent des services d'évaluation de conformité et, dans certains secteurs, accèdent aux marques de conformité de l'IEC. L'IEC n'est responsable d'aucun des services effectués par les organismes de certification indépendants.
6) Tous les utilisateurs doivent s'assurer qu'ils sont en possession de la dernière édition de cette publication.
7) Aucune responsabilité ne doit être imputée à l'IEC, à ses administrateurs, employés, auxiliaires ou mandataires, y compris ses experts particuliers et les membres de ses comités d'études et des Comités nationaux de l'IEC, pour tout préjudice causé en cas de dommages corporels et matériels, ou de tout autre dommage de quelque nature que ce soit, directe ou indirecte, ou pour supporter les coûts (y compris les frais de justice) et les dépenses découlant de la publication ou de l'utilisation de cette Publication de l'IEC ou de toute autre Publication de l'IEC, ou au crédit qui lui est accordé.
8) L'attention est attirée sur les références normatives citées dans cette publication. L'utilisation de publications référencées est obligatoire pour une application correcte de la présente publication.
9) L'attention est attirée sur le fait que certains des éléments de la présente Publication de l'IEC peuvent faire l'objet de droits de brevet. L'IEC ne saurait être tenue pour responsable de ne pas avoir identifié de tels droits de brevets et de ne pas avoir signalé leur existence.

La Norme internationale IEC 60974-10 a été établie par le comité d'études 26 de l'IEC: Soudage électrique.

Cette quatrième édition annule et remplace la troisième édition parue en 2014 et son Amendement 1:2015. Cette édition constitue une révision technique.

Cette édition inclut les modifications techniques majeures suivantes par rapport à l'édition précédente:

a) références normatives mises à jour;
b) nouvelles exigences relatives au matériel alimenté par batteries;
c) nouvelles exigences relatives au matériel combiné à des émetteurs/récepteurs radioélectriques.

IECNORM.COM : Click to view the full PDF of IEC 60974-10:2020 RLV

Le texte de cette norme est issu des documents suivants:

FDIS	Rapport de vote
26/695/FDIS	26/697/RVD

Le rapport de vote indiqué dans le tableau ci-dessus donne toute information sur le vote ayant abouti à l'approbation de cette norme.

Cette publication a été rédigée selon les Directives ISO/IEC, Partie 2.

Une liste de toutes les parties de la série IEC 60974, publiées sous le titre général *Matériel de soudage à l'arc*, peut être consultée sur le site web de l'IEC.

Le comité a décidé que le contenu de cette publication ne sera pas modifié avant la date de stabilité indiquée sur le site web de l'IEC sous « http://webstore.iec.ch » dans les données relatives à la publication recherchée. À cette date, la publication sera

- reconduite,
- supprimée,
- remplacée par une édition révisée, ou
- amendée.

IECNORM.COM : Click to view the full PDF of IEC 60974-10:2020 RLV

MATÉRIEL DE SOUDAGE À L'ARC –

Partie 10: Exigences de compatibilité électromagnétique (CEM)

1 Domaine d'application

La présente partie de l'IEC 60974 s'applique au matériel de soudage à l'arc et techniques connexes y compris les sources de courant de soudage et les matériels auxiliaires, tels que les dévidoirs, les systèmes de refroidissement par liquide, les dispositifs d'amorçage et de stabilisation de l'arc et les chargeurs de matériels alimentés par batteries.

NOTE 1 Les techniques connexes sont, par exemple, le coupage plasma et le soudage à l'arc de goujons.

NOTE 2 Le présent document ne précise pas les exigences de sécurité de base pour le matériel de soudage à l'arc, telles que la protection contre les chocs électriques, une opération non sûre, la coordination de l'isolation et les essais diélectriques associés.

Le matériel de soudage à l'arc contenant un émetteur ou récepteur radioélectrique est couvert par le présent document.

Les exigences relatives aux émissions rayonnées dans la présente norme ne sont pas destinées à s'appliquer aux transmissions intentionnelles d'un émetteur radioélectrique comme défini par l'UIT ni à des émissions parasites relatives à ces émetteurs intentionnels.

Le présent document spécifie

a) les normes applicables et les méthodes d'essai pour les émissions de fréquence radioélectrique (RF);

b) les normes applicables et les méthodes d'essai pour les émissions de courant harmonique, les fluctuations de tension et les papillotements;

c) les exigences d'immunité et les méthodes d'essai pour les perturbations continues ou transitoires, conduites et rayonnées, y compris les décharges électrostatiques;

d) les exigences supplémentaires relatives aux matériels alimentés par des batteries internes ou externes (Annexe D);

e) les exigences supplémentaires relatives aux matériels contenant des émetteurs/récepteurs radioélectriques (Annexe E).

Le matériel de soudage à l'arc, soumis à l'essai de type du présent document et qui satisfait à ses exigences, est considéré comme étant conforme pour toutes les applications.

2 Références normatives

Les documents suivants cités dans le texte constituent, pour tout ou partie de leur contenu, des exigences du présent document. Pour les références datées, seule l'édition citée s'applique. Pour les références non datées, la dernière édition du document de référence s'applique (y compris les éventuels amendements).

IEC 60974-1:2017, *Matériel de soudage à l'arc – Partie 1: Sources de courant de soudage*
IEC 60974-1:2017/AMD1:2019

IEC 60974-6:2015, *Matériel de soudage à l'arc – Partie 6: Matériel à service limité*

IECNORM.COM : Click to view the full PDF of IEC 60974-10:2020 RLV

IEC 61000-3-2:2018, *Compatibilité électromagnétique (CEM) – Partie 3-2: Limites – Limites pour les émissions de courant harmonique (courant appelé par les appareils ≤ 16 A par phase)*

IEC 61000-3-3:2013, *Compatibilité électromagnétique (CEM) – Partie 3-3: Limites – Limitation des variations de tension, des fluctuations de tension et du papillotement dans les réseaux publics d'alimentation basse tension, pour les matériels ayant un courant assigné ≤ 16 A par phase et non soumis à un raccordement conditionnel*
IEC 61000-3-3:2013/AMD1:2017

IEC 61000-3-11:2017, *Compatibilité électromagnétique (CEM) – Partie 3-11: Limites – Limitation des variations de tension, des fluctuations de tension et du papillotement dans les réseaux publics d'alimentation basse tension – Équipements ayant un courant assigné ≤ 75 A et soumis à un raccordement conditionnel*

IEC 61000-3-12:2011, *Compatibilité électromagnétique (CEM) – Partie 3-12: limites -Limites pour les courants harmoniques produits par les appareils connectés aux réseaux publics basse tension ayant un courant appelé > 16 A et ≤ 75 A par phase*

IEC 61000-4-2:2008, *Compatibilité électromagnétique (CEM) – Partie 4-2: Techniques d'essai et de mesure – Essai d'immunité aux décharges électrostatiques*

IEC 61000-4-3:2006, *Compatibilité électromagnétique (CEM) – Partie 4-3: Techniques d'essai et de mesure – Essai d'immunité aux champs électromagnétiques rayonnés aux fréquences radioélectriques*
IEC 61000-4-3:2006/AMD1:2007
IEC 61000-4-3:2006/AMD2:2010

IEC 61000-4-4:2012, *Compatibilité électromagnétique (CEM) – Partie 4-4: Techniques d'essai et de mesure – Essais d'immunité aux transitoires électriques rapides en salves*

IEC 61000-4-5:2014, *Compatibilité électromagnétique (CEM) – Partie 4-5: Techniques d'essai et de mesure – Essai d'immunité aux ondes de choc*
IEC 61000-4-5:2014/AMD1:2017

IEC 61000-4-6:2013, *Compatibilité électromagnétique (CEM) – Partie 4-6: Techniques d'essai et de mesure – Immunité aux perturbations conduites, induites par les champs radioélectriques*

IEC 61000-4-11:2004, *Compatibilité électromagnétique (CEM) – Partie 4-11: Techniques d'essai et de mesure – Essais d'immunité aux creux de tension, coupures brèves et variations de tension*
IEC 61000-4-11:2004/AMD1:2017

IEC 61000-4-34:2005, *Compatibilité électromagnétique (CEM) – Partie 4-34: Techniques d'essai et de mesure – Essais d'immunité aux creux de tension, coupures brèves et variations de tension pour matériel ayant un courant appelé de plus de 16 A par phase*
IEC 61000-4-34:2005/AMD1:2009

IEC 61000-6-1:2016, *Compatibilité électromagnétique (CEM) – Partie 6-1: Normes génériques – Norme d'immunité pour les environnements résidentiels, commerciaux et de l'industrie légère*

IEC 61000-6-2:2016, *Compatibilité électromagnétique (CEM) – Partie 6-2: Normes génériques – Norme d'immunité pour les environnements industriels*

IECNORM.COM : Click to view the full PDF of IEC 60974-10:2020 RLV

IEC 61000-6-3:2006, *Compatibilité électromagnétique (CEM) – Partie 6-3: Normes génériques – Norme sur l'émission pour les environnements résidentiels, commerciaux et de l'industrie légère*
IEC 61000-6-3:2006/AMD1:2010

IEC 61000-6-4:2018, *Compatibilité électromagnétique (CEM) – Partie 6-4: Normes génériques – Norme sur l'émission pour les environnements industriels*

CISPR 11:2015, *Appareils industriels, scientifiques et médicaux – Caractéristiques de perturbations radioélectriques – Limites et méthodes de mesure*
CISPR 11:2015/AMD1:2016
CISPR 11:2015/AMD2:2019

CISPR 14-1:2016, *Compatibilité électromagnétique – Exigences pour les appareils électrodomestiques, outillages électriques et appareils analogues – Partie 1: Émission*

CISPR 16-1-1:2019, *Spécifications des méthodes et des appareils de mesure des perturbations radioélectriques et de l'immunité aux perturbations radioélectriques – Partie 1-1: Appareils de mesure des perturbations radioélectriques et de l'immunité aux perturbations radioélectriques – Appareils de mesure*

CISPR 16-1-2:2014, *Spécifications des méthodes et des appareils de mesure des perturbations radioélectriques et de l'immunité aux perturbations radioélectriques – Partie 1-2: Appareils de mesure des perturbations radioélectriques et de l'immunité aux perturbations radioélectriques – Dispositifs de couplage pour la mesure des perturbations conduites*
CISPR 16-1-2:2014/AMD1:2017

CISPR 16-1-4:2019, *Spécifications des méthodes et des appareils de mesure des perturbations radioélectriques et de l'immunité aux perturbations radioélectriques – Partie 1-4: Appareils de mesure des perturbations radioélectriques et de l'immunité aux perturbations radioélectriques – Antennes et emplacements d'essai pour les mesures des perturbations rayonnées*

3 Termes et définitions

Pour les besoins du présent document, les termes et définitions de l'IEC 60974-1 ainsi que les suivants s'appliquent.

L'ISO et l'IEC tiennent à jour des bases de données terminologiques destinées à être utilisées en normalisation, consultables aux adresses suivantes:

- IEC Electropedia: disponible à l'adresse http://www.electropedia.org/
- ISO Online browsing platform: disponible à l'adresse http://www.iso.org/obp

3.1
claquement
perturbation qui dépasse la limite d'une perturbation continue qui n'est pas plus long que 200 ms et qui est séparée d'une perturbation subséquente par au moins 200 ms

Note 1 à l'article: Les deux intervalles sont reliés au niveau de la limite de la perturbation continue.

Note 2 à l'article: Un claquement peut contenir un nombre d'impulsions, dans ce cas le temps en question est celui à partir du début de la première jusqu'à la fin de la dernière impulsion.

[SOURCE: IEC 60050-851:2008, 851-15-13]

IECNORM.COM : Click to view the full PDF of IEC 60974-10:2020 RLV

3.2
dispositif de couplage
circuit électrique dont le but est de transférer de l'énergie d'un circuit dans un autre avec une impédance définie

Note 1 à l'article: Les dispositifs de couplage et de découplage peuvent être intégrés dans une unité (réseau de couplage et réseau de découplage (CDN)) ou dans des réseaux séparés.

[SOURCE:IEC 61000-4-6:2013, 3.7]

3.3
CDN
dispositif de couplage et de découplage
circuit électrique incorporant les fonctions de réseau de couplage et de réseau de découplage

Note 1 à l'article: L'abréviation CDN est dérivée du terme anglais développé correspondant "coupling/decoupling network".

[SOURCE:IEC 61000-4-6:2013, 3.8]

3.4
réseau de découplage
dispositif de découplage
circuit électrique dont le but est d'empêcher les signaux d'essai appliqués à l'EUT (matériel à l'essai) d'influencer d'autres appareils, équipements ou systèmes qui ne sont pas soumis aux essais

Note 1 à l'article: L'abréviation EUT est dérivée du terme anglais développé correspondant "equipment under test".

[SOURCE:IEC 61000-4-6:2013, 3.9]

3.5
FAR
chambre totalement anéchoïque
enceinte protégée dont les surfaces intérieures sont garnies d'un matériau absorbant l'énergie aux fréquences radioélectriques (c'est-à-dire un absorbant RF) qui absorbe l'énergie électromagnétique dans la plage de fréquences concernée

Note 1 à l'article: L'abréviation FAR est dérivée du terme anglais développé correspondant "fully-anechoic room".

[SOURCE: CISPR 11:2015/AMD1:2016, 3.20]

3.6
OATS
site d'essai en champ libre
installation utilisée pour les mesures des champs électromagnétiques, dont l'intention est de simuler un environnement semi-libre sur une plage de fréquences spécifiée utilisée pour les essais d'émissions rayonnées des produits

Note 1 à l'article: Un site OATS type se situe à l'extérieur dans un champ libre, son plan de masse étant conducteur.

Note 2 à l'article: L'abréviation OATS est dérivée du terme anglais développé correspondant "open-area test site".

[SOURCE: CISPR 11:2015/AMD1:2016, 3.21]

IECNORM.COM : Click to view the full PDF of IEC 60974-10:2020 RLV

3.7
accès
interface particulière d'un matériel qui assure son couplage avec l'environnement électromagnétique (IEC 60050-161:2018, 161-01-01) extérieur et à travers laquelle il est influencé par cet environnement

EXEMPLE Les exemples d'accès présentant un intérêt sont indiqués à la Figure 1. L'accès par l'enveloppe est la frontière physique de l'appareil (par exemple l'enveloppe). L'accès par l'enveloppe concerne la transmission d'énergie rayonnée et les décharges électrostatiques (IEC 60050-161:2018, 161-01-22), alors que les autres accès concernent la transmission d'énergie conduite.

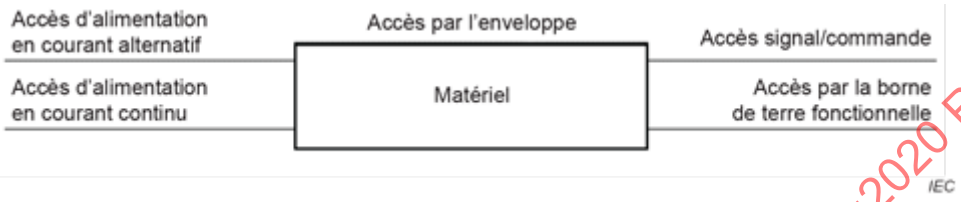

Figure 1 – Exemples d'accès

Note 1 à l'article: Les accès dans le domaine de la compatibilité électromagnétique sont des cas particuliers de l'accès définit par l'IEC 60050-131:2002, 131-12-60.

[SOURCE: Guide IEC 107:2014, 3.1.12, modifiée – La présentation du terme et la la définition ont été révisées pour l'aligner sur l'IEC 60050 (toutes les parties).]

3.8
portable, adj
capable d'être porté par une personne seule

Note 1 à l'article: La portabilité est généralement spécifiée par le fabricant de l'équipement selon l'utilisation prévue, la conception de l'équipement et/ou la réglementation applicable.

[SOURCE: IEC 60050-151:2001,151-16-47, modifiée – La note à l'article a été complètement réécrite.]

3.9
SAC
chambre semi-anéchoïque
enceinte protégée dans laquelle cinq des six surfaces intérieures sont garnies d'un matériau absorbant l'énergie aux fréquences radioélectriques (c'est-à-dire un absorbeur RF) qui absorbe l'énergie électromagnétique dans la plage de fréquences concernée et dont la surface horizontale inférieure est un plan de masse conducteur destiné à être utilisé avec un équipage d'essai OATS

Note 1 à l'article: L'abréviation SAC est dérivée du terme anglais développé correspondant "semi-anechonic chamber".

[SOURCE: CISPR 11:2015/AMD1:2016, 3.22]

3.10
petit matériel
matériel qui est, soit placé sur une table, soit posé sur le sol, et qui tient à l'intérieur d'un volume d'essai cylindrique imaginaire dont le diamètre ne dépasse pas 1,2 m et dont la hauteur au-dessus du plan au sol ne dépasse pas 1,5 m, y compris ses câbles

[SOURCE: CISPR 11:2015, 3.17, modifiée – ne s'applique qu'à la langue anglaise.]

IECNORM.COM : Click to view the full PDF of IEC 60974-10:2020 RLV

3.11
accès de réseau câblé
ACCES pour le raccordement de la voix, de données et des transferts de signaux destinés à relier entre eux des systèmes largement répandus à une connexion directe à un réseau de communication unique ou multiutilisateur

Note 1 à l'article: Les exemples incluent CATV, PSTN, ISDN, xDSL, LAN et les réseaux similaires.

Note 2 à l'article: Ces ACCES peuvent prendre en charge des câbles blindés ou non blindés et peuvent également transporter l'alimentation courant alternatif ou courant continu, ce qui fait partie intégrante de la spécification relative aux télécommunications.

[SOURCE: CISPR 32:2015, 3.1.32]

4 Exigences générales d'essai

4.1 Conditions d'essai

Les essais doivent être effectués sur un matériel entièrement assemblé, représentatif de la production de série. Les essais doivent être effectués dans les conditions opératoires indiquées dans l'IEC 60974-1:2017 et IEC 60974-1:2017/AMD1:2019 ou l'IEC 60974-6:2015, et sous la tension d'alimentation et la fréquence assignées. Les résultats obtenus pour les émissions RF et l'immunité à 50 Hz sont valables pour le même appareil utilisé à une fréquence de 60 Hz et inversement.

Lorsque le présent document indique des options pour soumettre à l'essai des exigences particulières avec une sélection de méthodes d'essai, la conformité peut être démontrée par l'une de ces méthodes en utilisant les limites spécifiées et les restrictions fournies dans les tableaux appropriés.

Des unités identiques peuvent être utilisées pour la soumission à l'essai en parallèle. Dans ce cas, ces informations doivent être consignées dans le rapport d'essai.

4.2 Instruments de mesure

Les instruments de mesure doivent satisfaire aux exigences de la CISPR 16-1-1:2019 et aux normes indiquées dans les Tableau 6, Tableau 7 et Tableau 8, le cas échéant.

4.3 Réseau fictif

Le mesurage de la tension perturbatrice aux bornes du réseau doit être réalisé en utilisant un réseau fictif, lorsque disponible dans le commerce, constitué d'un réseau V de 50 Ω/50 µH ou 50 Ω/50 µH + 5 Ω, comme cela est spécifié dans la CISPR 16-1-2:2014 et CISPR 16-1-2:2014/AMD1:2017.

Le réseau fictif est exigé pour fournir une impédance d'alimentation principale définie à la RF au point de mesure, et aussi pour isoler le matériel à l'essai du bruit ambiant sur les lignes d'alimentation.

4.4 Sonde de tension

Une sonde de tension comme spécifié dans la CISPR 16-1-2:2014 et CISPR 16-1-2:2014/AMD1:2017 doit être utilisée lorsque le réseau fictif ne peut pas être utilisé. La sonde est connectée successivement entre chaque ligne et la terre de référence. La sonde doit comprendre une capacité de blocage et une résistance telles que la résistance totale entre la ligne et la terre soit au moins de 1 500 Ω. L'effet sur l'exactitude de mesure de la capacité ou de tout autre dispositif, qui peut être utilisé pour protéger le récepteur de mesure contre les courants dangereux, doit être soit inférieur à 1 dB, soit permis pour l'étalonnage.

IECNORM.COM : Click to view the full PDF of IEC 60974-10:2020 RLV

4.5 Antennes

Dans la plage de fréquences comprise entre 30 MHz et 6 GHz, la ou les antennes utilisées doivent être telles que spécifiées dans la CISPR 16-1-4:2019.

Les mesurages doivent être effectués pour les deux polarisations horizontale et verticale.

Dans un OATS ou dans une SAC, le point le plus proche de la ou des antennes à la terre ne doit pas être inférieur à 0,25 m.

Pour les mesurages dans une FAR, la hauteur de l'antenne est fixée au milieu géométrique de la hauteur du volume d'essai validé.

4.6 Dispositif de couplage et de découplage (CDN)

Lorsqu'une enceinte blindée est exigée, et lorsque la charge se trouve à l'extérieur de l'enceinte blindée, un dispositif de découplage de charge connecté à la charge extérieure par l'intermédiaire de filtres RF adaptés doit être utilisé à l'intérieur de l'enceinte. Un dispositif de couplage et de découplage (CDN) AF 2 de 150 Ω, comme cela est spécifié dans l'IEC 61000-4-6:2013, adapté au courant et à la tension de charge respectifs, doit être utilisé. L'extrémité du raccordement périphérique d'accès RF du CDN doit avoir une résistance électrique de 50 Ω.

Tout dispositif de couplage adapté spécifié dans la CISPR 16-1-2:2014 et CISPR 16-1-2:2014/AMD1:2017 peut être utilisé pour l'évaluation des émissions conduites des accès par les bornes de signaux, de commande et de mesure.

5 Montage d'essai d'émission et d'immunité

5.1 Généralités

Les essais d'émission et d'immunité des matériels non portables doivent être réalisés sur un matériel configuré conformément à la Figure 2. Pour les matériels portables, soit le montage d'essai indiqué à la Figure 2, ou le montage d'essai indiqué à la Figure 3 doit être utilisé. Les matériels de soudage à l'arc soumis à l'essai dans l'une de ces configurations doivent être reconnus comme ayant satisfait aux exigences nécessaires du présent document.

Pour les mesurages de l'ondulation du courant de sortie, il n'existe pas d'exigence spécifique relative à la configuration du matériel.

Pour les essais d'émission RF, d'immunité aux champs électromagnétiques, d'immunité de mode commun et d'immunité aux transitoires rapides, les dimensions suivantes s'appliquent:

- à la Figure 2, a doit être de 1 m;
- aux Figure 2 et Figure 3, b doit être de 0,4 m ou moins;
- à la Figure 3, h doit être de 0,8 m;
- à la Figure 3, la distance horizontale c entre l'EUT et la charge conventionnelle doit être de 1 m ou moins.

Les dimensions a, b et h ne sont pas définies pour tous les autres essais.

La tolérance pour les dimensions a et h est de ± 0,05 m.

IECNORM.COM : Click to view the full PDF of IEC 60974-10:2020 RLV

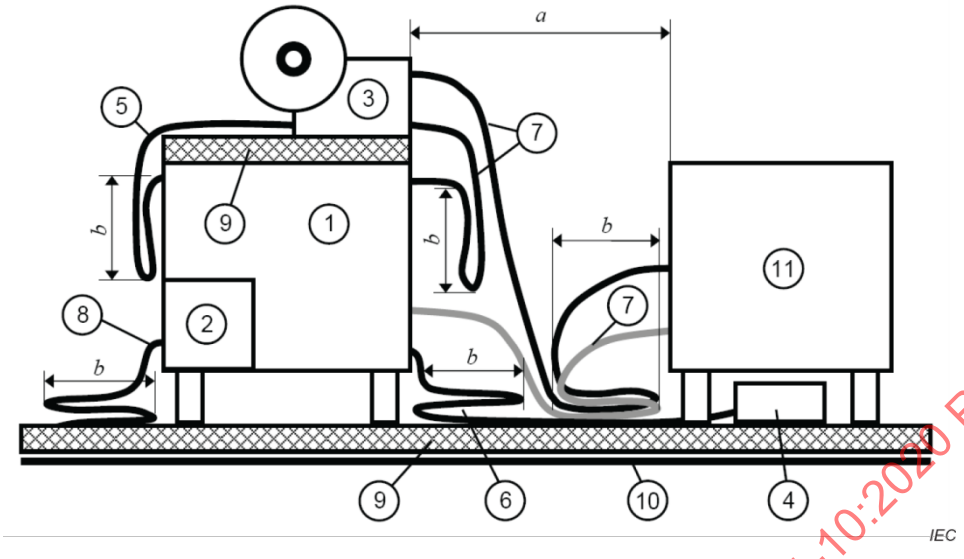

Légende

1	Source de courant de soudage	7	Câble de soudage (en paquet)
2	Système de refroidissement par liquide	8	Câble d'alimentation d'entrée (en paquet)
3	Dévidoir	9	Isolation
4	Commande à distance	10	Plan d'appui relié à la terre de référence
5	Câble d'interconnexion (en paquet)	11	Charge conventionnelle
6	Câble de la commande à distance (en paquet)		

a Distance entre la source de courant et la charge ou le dispositif de découplage de charge

b Longueur de paquet de câble

NOTE 1 Les équipements 2, 3 et 4 sont des matériels auxiliaires, le cas échéant, et sont généralement positionnés, tel que spécifié par le fabricant des équipements.

NOTE 2 L'isolation (équipement 9) se situe entre les équipements 1 et 3 lorsque cela est spécifié par le fabricant.

Figure 2 – Montage d'essai 1 pour le matériel de soudage à l'arc

Si, du fait de la conception du matériel de soudage à l'arc, ces essais ne peuvent pas être effectués comme décrit, il convient de suivre les recommandations du fabricant (par exemple, un shunt temporaire ou une mise hors service des circuits de commande) afin de répondre aux objectifs de cet essai. Chaque modification temporaire faite sur le matériel de soudage à l'arc doit être documentée.

Si des matériels auxiliaires peuvent être connectés à la source de courant de soudage, ladite source doit alors être soumise à l'essai, raccordée à la configuration minimale des matériels auxiliaires nécessaires pour utiliser les raccordements périphériques d'accès. Si la source de courant de soudage a un grand nombre de raccordements périphériques d'accès similaires ou des raccordements périphériques d'accès ayant de nombreuses connexions similaires, un nombre suffisant doit alors être choisi pour simuler les conditions normales de fonctionnement et garantir que les différentes configurations sont couvertes.

Pour les essais de tension perturbatrice aux bornes du réseau, la source de courant de soudage doit être connectée à l'alimentation électrique en utilisant le réseau V spécifié en 4.3 lorsque cela est possible. Le réseau V doit être situé de manière que sa surface la plus proche ne soit pas à moins de 0,8 m de la limite la plus proche du matériel soumis à l'essai. Le câble d'alimentation d'entrée doit avoir une longueur minimale de 2 m.

IECNORM.COM : Click to view the full PDF of IEC 60974-10:2020 RLV

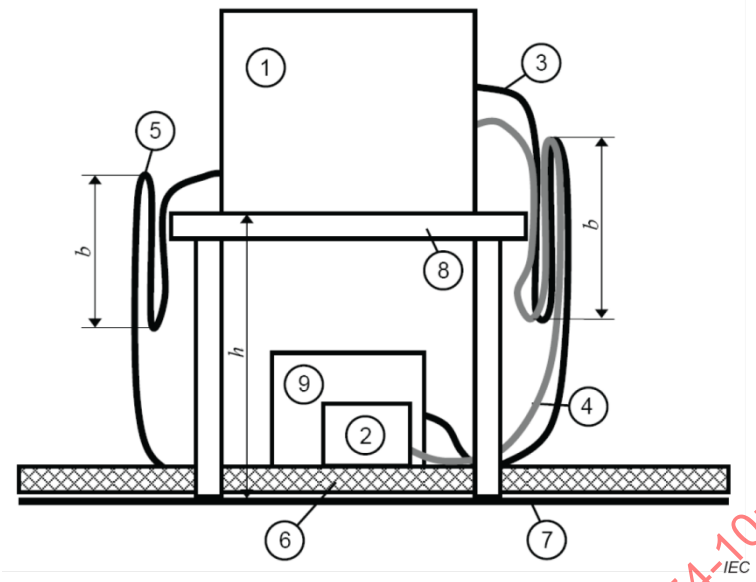

Légende

1	Matériel de soudage à l'arc	6	Isolation
2	Commande à distance (sous la table)	7	Plan d'appui relié à la terre de référence
3	Câble de soudage (en paquet)	8	Table non conductrice
4	Câble de la commande à distance (en paquet)	9	Charge conventionnelle; La charge peut être placée sous ou à côté de la table (sous la table)
5	Câble d'alimentation d'entrée (en paquet)		
b	Longueur de paquet de câble		
h	Hauteur de la table non conductrice		

NOTE L'équipement 2 est un matériel auxiliaire, le cas échéant.

Figure 3 – Montage d'essai 2 dans le cas d'un matériel de soudage à l'arc portable

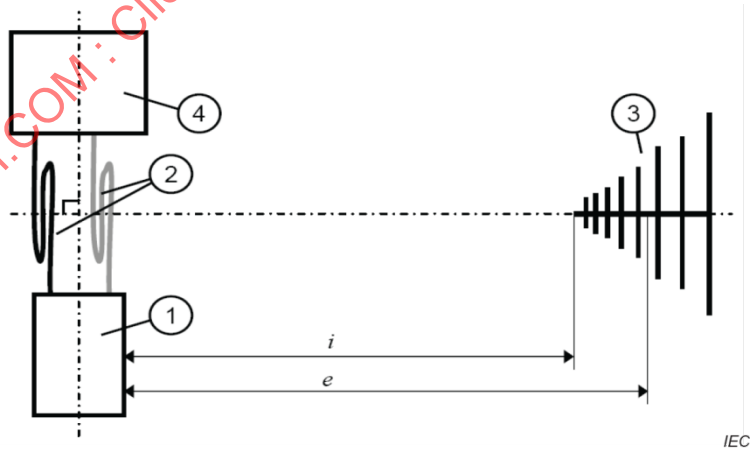

Légende

1	Matériel de soudage à l'arc	3	Antenne d'essai (polarisation horizontale indiquée)
2	Câbles de soudage (en paquet)	4	Charge conventionnelle ou dispositif de découplage de charge
e	Distance de séparation entre le matériel à l'essai et le centre de rayonnement de l'antenne		
i	Distance entre le matériel à l'essai et le point le plus proche de l'antenne		

Figure 4 – Vue de dessus du montage d'essai représenté à la Figure 2

IECNORM.COM : Click to view the full PDF of IEC 60974-10:2020 RLV

La source de courant de soudage doit être reliée à la charge conventionnelle avec des câbles de section adaptée au courant de soudage, ou à la torche ou au porte-électrode approprié avec un adaptateur. Les câbles de soudage doivent avoir une longueur minimale de 2 m.

Si une charge située à l'extérieur de l'enceinte blindée est utilisée, un dispositif de découplage de charge tel que défini en 4.6 doit être placé à l'intérieur de cette enceinte. L'extrémité du dispositif de découplage de charge doit être reliée à la terre de référence et le dispositif doit être relié à la charge extérieure par l'intermédiaire de filtres adaptés.

Pour les essais d'émission RF qui utilisent le montage d'essai indiqué à la Figure 2, la source de courant de soudage doit être isolée par un tapis isolant (ou des plots) ayant moins de 12 mm d'épaisseur ou isolée par son propre soubassement le cas échéant.

Pour les essais d'immunité aux perturbations électromagnétiques rayonnées et d'immunité aux champs électromagnétiques qui utilisent le montage d'essai de référence indiqué à la Figure 2, la position de la source de courant de soudage et de la charge conventionnelle (ou, le cas échéant, du dispositif de découplage de charge) doit être fixe par rapport à l'antenne d'essai comme représenté à la Figure 4. La distance de séparation e à la Figure 4 est définie en 8.3 de la CISPR 11:2015 et CISPR 11:2015/AMD1:2016. La distance de séparation i à la Figure 4 est définie dans l'IEC 61000-4-3:2006, IEC 61000-4-3:2006/AMD1:2007 et IEC 61000-4-3:2006/AMD2:2010.

Les câbles doivent pouvoir tomber naturellement sur le plan d'appui relié à la terre. La longueur excédentaire des câbles doit être repliée, dans toute la mesure du possible, pour constituer des paquets distincts ne dépassant pas 0,4 m de long.

Les géométries de montages d'essai spécifiques concernant les essais d'immunité se trouvent dans les normes de base référencées dans les Tableau 6, Tableau 7 et Tableau 8.

La configuration du matériel soumis à l'essai doit être notée dans le rapport d'essai.

5.2 Charge

Pendant les essais, l'opération de soudage à l'arc est simulée en chargeant le matériel avec une charge conventionnelle comme cela est spécifié dans l'IEC 60974-1:2017 et IEC 60974-1:2017/AMD1:2019. Pour les essais d'émission RF qui n'utilisent pas un CDN, la charge conventionnelle doit être isolée par un tapis isolant (ou des plots) d'une épaisseur de 12 mm au plus, ou isolée par son propre soubassement le cas échéant.

Pour les mesurages de l'ondulation du courant de sortie, l'inductance de la charge comprenant des câbles de soudage à la fréquence fondamentale doit être inférieure à 10 µH pour une résistance totale de 100 mΩ.

5.3 Matériels auxiliaires

5.3.1 Exigences générales

Un matériel auxiliaire doit être soumis à l'essai en association avec une source de courant de soudage. Il doit être connecté, installé et configuré selon les recommandations du fabricant.

Les exigences spécifiques pour le fonctionnement des matériels auxiliaires sont données ci-dessous.

IECNORM.COM : Click to view the full PDF of IEC 60974-10:2020 RLV

5.3.2 Dévidoirs

Les dévidoirs doivent être positionnés sur ou à côté de la source de courant de soudage, suivant leur conception. Les dévidoirs, qui peuvent être placés soit à l'intérieur soit à l'extérieur de l'enveloppe de la source de courant de soudage, doivent être placés à l'extérieur. Pour les essais d'émission RF, les dévidoirs prévus pour être posés sur le sol, doivent être isolés par un tapis isolant (ou des plots) d'une épaisseur de 12 mm au plus, ou isolés par leur propre soubassement le cas échéant.

Le câble de soudage reliant le dévidoir à la source de courant de soudage doit avoir une longueur de 2 m ou plus si nécessaire pour le raccordement, et une section adaptée au courant assigné. Si le câble fourni par le fabricant mesure plus de 2 m, la longueur excédentaire doit être repliée, dans toute la mesure du possible, pour constituer un paquet ne dépassant pas 0,4 m de long. Un câble de soudage mesurant moins de 2 m doit être admis s'il fait partie de la fourniture du matériel.

Le ou les câbles d'interconnexion reliant le dévidoir à la source de courant de soudage doivent être du type et de la longueur recommandés par le fabricant. La longueur excédentaire de câble doit être repliée, dans toute la mesure du possible, pour constituer un paquet ne dépassant pas 0,4 m de long.

Une torche de soudage, comme recommandé par le fabricant, peut être utilisée au lieu du câble de soudage pour faire le raccordement du dévidoir à la charge conventionnelle.

5.3.3 Commandes à distance

Si une source de courant de soudage peut fonctionner avec une commande à distance, elle doit être soumise à l'essai avec la commande à distance connectée, susceptible de présenter la plus forte émission et/ou la plus faible immunité. La commande à distance doit être placée sur le plan d'appui relié à la terre et en être isolée, à côté de la charge si possible. Pour les essais d'émission RF, l'isolation ne doit pas avoir une épaisseur supérieure à 12 mm. Les commandes à distance prévues pour être fixées sur le matériel de soudage à l'arc au cours de l'utilisation doivent être placées comme prévu. Pour les commandes à distance sans fil, voir l'Annexe E.

La longueur excédentaire de câble doit être repliée, dans toute la mesure du possible, pour constituer un paquet ne dépassant pas 0,4 m de long.

Les commandes complexes qui peuvent être utilisées indépendamment d'une source de courant dédiée peuvent être soumises à l'essai en association avec cette même source ou comme élément autonome, comme cela est spécifié par le fabricant.

5.3.4 Systèmes d'amorçage et de stabilisation de l'arc

Les systèmes d'amorçage et de stabilisation de l'arc doivent être désactivés pendant tous les essais autres que les essais d'émission RF, afin de protéger le matériel d'essai. Pour les essais d'émission RF, les mesurages doivent être effectués au terme d'un délai de 5 s suivant la mise sous tension du matériel.

5.3.5 Systèmes de refroidissement par liquide

Les systèmes de refroidissement par liquide doivent être positionnés sur ou à côté d'une source de courant de soudage, suivant leur conception. Les systèmes de refroidissement par liquide, qui peuvent être placés soit à l'intérieur soit à l'extérieur de l'enveloppe de la source de courant de soudage, doivent être placés à l'extérieur. Pour les essais d'émission RF, les systèmes de refroidissement par liquide prévus pour être posés sur le sol, doivent être isolés par un tapis isolant (ou des plots) d'une épaisseur de 12 mm au plus, ou isolés par leur propre soubassement le cas échéant.

IECNORM.COM : Click to view the full PDF of IEC 60974-10:2020 RLV

L'entrée et la sortie peuvent être reliées par un flexible, selon les recommandations du fabricant, afin de permettre l'écoulement du liquide de refroidissement.

6 Essais d'émission

6.1 Classification pour les essais d'émission RF

6.1.1 Matériel de Classe A

Un matériel de Classe A est un matériel adapté à l'utilisation dans tous les sites autres que ceux alloués dans des environnements résidentiels et ceux directement raccordés à un réseau d'alimentation électrique à basse tension qui alimente les bâtiments à usage domestique.

Un matériel de Classe A doit être conforme aux limites de la Classe A conformément au 6.3.

Les systèmes d'amorçage et de stabilisation de l'arc, ainsi que le matériel de soudage à l'arc de goujons doivent être classés comme matériel de Classe A.

6.1.2 Matériel de Classe B

Un matériel de Classe B est prévu pour être utilisé dans tous les sites, y compris les sites résidentiels où le courant électrique est fourni par le réseau public d'alimentation à basse tension.

Un matériel de Classe B doit être conforme aux limites de la Classe B conformément au 6.3.

6.2 Conditions d'essai

6.2.1 Source de courant de soudage

6.2.1.1 Conditions d'essai pour les essais d'émission RF

La source de courant de soudage doit être soumise à l'essai sous les tensions conventionnelles en charge référencées en 6.2.2 dans les conditions de charge suivantes:

a) au courant de soudage minimal assigné;

b) au courant de soudage assigné pour un facteur de marche de 100 %. Si aucun courant assigné n'est spécifié pour un facteur de marche de 100 %, l'essai doit être réalisé à 50 % de I_{2max}.

De plus, en cas d'état de repos, la source de courant de soudage doit être soumise à l'essai, les câbles étant déconnectés au niveau de la charge.

Si le courant d'alimentation est supérieur à 25 A dans l'une des conditions de charge indiquées ci-dessus, la charge peut être réduite pour obtenir un courant d'alimentation de 25 A. Toutefois, si un courant d'alimentation de 25 A ou inférieur ne peut pas être obtenu, la sonde de tension, comme spécifiée en 4.4, peut être utilisée pour les essais conformément au 6.3.2, comme variante à un réseau fictif.

Les sources de courant de soudage doivent être soumises à l'essai dans tous les modes de fonctionnement.

NOTE Des exemples typiques de modes de fonctionnement sont le fonctionnement en courant continu, en courant alternatif ou en courant continu pulsé.

Les sources de courant de soudage à procédés multiples doivent être soumises à l'essai avec la charge conventionnelle donnant la tension de charge la plus élevée pour le courant réglé. Si une source de courant de soudage contient plus d'un circuit de sortie (par exemple, le

IECNORM.COM : Click to view the full PDF of IEC 60974-10:2020 RLV