IEC 61754-4

Edition 3.0 2022-02
REDLINE VERSION

INTERNATIONAL STANDARD

colour inside

Fibre optic interconnecting devices and passive components – Fibre optic connector interfaces –
Part 4: Type SC connector family

IECNORM.COM : Click to view the full PDF of IEC 61754-4:2022 RLV

IEC 61754-4:2022-02 RLV(en)

THIS PUBLICATION IS COPYRIGHT PROTECTED
Copyright © 2022 IEC, Geneva, Switzerland

All rights reserved. Unless otherwise specified, no part of this publication may be reproduced or utilized in any form or by any means, electronic or mechanical, including photocopying and microfilm, without permission in writing from either IEC or IEC's member National Committee in the country of the requester. If you have any questions about IEC copyright or have an enquiry about obtaining additional rights to this publication, please contact the address below or your local IEC member National Committee for further information.

IEC Secretariat
3, rue de Varembé
CH-1211 Geneva 20
Switzerland

Tel.: +41 22 919 02 11
info@iec.ch
www.iec.ch

About the IEC
The International Electrotechnical Commission (IEC) is the leading global organization that prepares and publishes International Standards for all electrical, electronic and related technologies.

About IEC publications
The technical content of IEC publications is kept under constant review by the IEC. Please make sure that you have the latest edition, a corrigendum or an amendment might have been published.

IEC publications search - webstore.iec.ch/advsearchform
The advanced search enables to find IEC publications by a variety of criteria (reference number, text, technical committee, …). It also gives information on projects, replaced and withdrawn publications.

IEC Just Published - webstore.iec.ch/justpublished
Stay up to date on all new IEC publications. Just Published details all new publications released. Available online and once a month by email.

IEC Customer Service Centre - webstore.iec.ch/csc
If you wish to give us your feedback on this publication or need further assistance, please contact the Customer Service Centre: sales@iec.ch.

IEC Products & Services Portal - products.iec.ch
Discover our powerful search engine and read freely all the publications previews. With a subscription you will always have access to up to date content tailored to your needs.

Electropedia - www.electropedia.org
The world's leading online dictionary on electrotechnology, containing more than 22 300 terminological entries in English and French, with equivalent terms in 19 additional languages. Also known as the International Electrotechnical Vocabulary (IEV) online.

IECNORM.COM : Click to view the full PDF of IEC 61754-4:2022 RLV

IEC 61754-4

Edition 3.0 2022-02
REDLINE VERSION

INTERNATIONAL STANDARD

colour inside

Fibre optic interconnecting devices and passive components – Fibre optic connector interfaces –
Part 4: Type SC connector family

IECNORM.COM : Click to view the full PDF of IEC 61754-4:2022 RLV

INTERNATIONAL
ELECTROTECHNICAL
COMMISSION

ICS 33.180.20

ISBN 978-2-8322-1085-3

Warning! Make sure that you obtained this publication from an authorized distributor.

® Registered trademark of the International Electrotechnical Commission

CONTENTS

FOREWORD 4
1 Scope 6
2 Normative references 6
3 Terms and definitions 6
4 Description 6
5 Interfaces 7
Annex A (informative) Panel dimensions 37
A.1 General 37
A.2 Simplex adaptor 37
A.3 Duplex adaptor 37
Bibliography 39

Figure 1 – Simplex PC plug connector interface 8
Figure 2 – Simplex adaptor connector interface 11
Figure 3 – Pin gauge for adaptor 13
Figure 4 – Duplex PC plug connector interface 14
Figure 5 – Duplex adaptor connector interface 17
Figure 6 – Simplex ~~APC~~ angled PC plug connector interface 19
Figure 7 – Duplex ~~APC~~ angled PC plug connector interface 22
Figure 8 – Simplex active device receptacle interface for ~~APC~~ angled PC connector plug 25
Figure 9 – Simplex active device receptacle interface for PC connector plug 28
Figure 10 – Duplex active device receptacle interface for ~~APC~~ angled PC connector plug 31
Figure 11 – Duplex active device receptacle interface for PC connector plug 34
Figure A.1 – Panel cut out 37
Figure A.2 – Fixture cut out 37

Table 1 – Interfaces 7
Table 2 – Intermateability of interfaces 7
Table 3 – Dimensions of the simplex PC plug connector interface 9
Table 4 – Grade characteristics for simplex PC plug connector 10
Table 5 – Dimensions of the simplex adaptor connector interface 12
Table 6 – Grade characteristics for simplex adaptor connector 12
Table 7 – Pin gauge dimensions 13
Table 8 – Dimensions of the duplex PC plug connector interface 15
Table 9 – Grade characteristics for duplex PC plug connector 16
Table 10 – Dimensions of the duplex adaptor connector interface 18
Table 11 – Grade of the duplex adaptor connector 18
Table 12 – Dimensions of the simplex ~~APC~~ angled PC plug connector interfaces 20
Table 13 – Dimensions of the duplex ~~APC~~ angled PC plug connector interfaces 21

IECNORM.COM : Click to view the full PDF of IEC 61754-4:2022 RLV

Table 14 – Dimensions of the simplex active device receptacle interface for ~~APC~~ angled PC connector plug 26
Table 15 – Alignment feature grade of the simplex active device receptacle interface for angled PC connector plug 27
Table 16 – Mechanical stop feature grade of the simplex active device receptacle interface for angled PC connector plug 27
Table 17 – Dimensions of the simplex active device receptacle interface for PC connector plug 29
Table 18 – Alignment feature grade of the simplex active device receptacle interface for PC connector plug 30
Table 19 – Mechanical stop feature grade of the simplex active device receptacle interface for PC connector plug 30
Table 20 – Dimensions of the duplex active device receptacle interface for ~~APC~~ angled PC connector plug 32
Table 21 – Alignment feature grade of the duplex active device receptacle interface for angled PC connector plug 33
Table 22 – Mechanical stop feature grade of the duplex active device receptacle interface for angled PC connector plug 33
Table 23 – Dimensions of the duplex active device receptacle interface for PC connector plug 35
Table 24 – Alignment feature grade of the duplex active device receptacle interface for PC connector plug 36
Table 25 – Mechanical stop feature grade of the duplex active device receptacle interface for PC connector plug 36
Table A.1 – Dimensions for simplex adaptor 37
Table A.2 – Dimensions for duplex adaptor 38

IECNORM.COM : Click to view the full PDF of IEC 61754-4:2022 RLV

INTERNATIONAL ELECTROTECHNICAL COMMISSION

FIBRE OPTIC INTERCONNECTING DEVICES AND PASSIVE COMPONENTS – FIBRE OPTIC CONNECTOR INTERFACES –

Part 4: Type SC connector family

FOREWORD

1) The International Electrotechnical Commission (IEC) is a worldwide organization for standardization comprising all national electrotechnical committees (IEC National Committees). The object of IEC is to promote international co-operation on all questions concerning standardization in the electrical and electronic fields. To this end and in addition to other activities, IEC publishes International Standards, Technical Specifications, Technical Reports, Publicly Available Specifications (PAS) and Guides (hereafter referred to as "IEC Publication(s)"). Their preparation is entrusted to technical committees; any IEC National Committee interested in the subject dealt with may participate in this preparatory work. International, governmental and non-governmental organizations liaising with the IEC also participate in this preparation. IEC collaborates closely with the International Organization for Standardization (ISO) in accordance with conditions determined by agreement between the two organizations.

2) The formal decisions or agreements of IEC on technical matters express, as nearly as possible, an international consensus of opinion on the relevant subjects since each technical committee has representation from all interested IEC National Committees.

3) IEC Publications have the form of recommendations for international use and are accepted by IEC National Committees in that sense. While all reasonable efforts are made to ensure that the technical content of IEC Publications is accurate, IEC cannot be held responsible for the way in which they are used or for any misinterpretation by any end user.

4) In order to promote international uniformity, IEC National Committees undertake to apply IEC Publications transparently to the maximum extent possible in their national and regional publications. Any divergence between any IEC Publication and the corresponding national or regional publication shall be clearly indicated in the latter.

5) IEC itself does not provide any attestation of conformity. Independent certification bodies provide conformity assessment services and, in some areas, access to IEC marks of conformity. IEC is not responsible for any services carried out by independent certification bodies.

6) All users should ensure that they have the latest edition of this publication.

7) No liability shall attach to IEC or its directors, employees, servants or agents including individual experts and members of its technical committees and IEC National Committees for any personal injury, property damage or other damage of any nature whatsoever, whether direct or indirect, or for costs (including legal fees) and expenses arising out of the publication, use of, or reliance upon, this IEC Publication or any other IEC Publications.

8) Attention is drawn to the Normative references cited in this publication. Use of the referenced publications is indispensable for the correct application of this publication.

9) Attention is drawn to the possibility that some of the elements of this IEC Publication may be the subject of patent rights. IEC shall not be held responsible for identifying any or all such patent rights.

This redline version of the official IEC Standard allows the user to identify the changes made to the previous edition IEC 61754-4:2013. A vertical bar appears in the margin wherever a change has been made. Additions are in green text, deletions are in strikethrough red text.

IECNORM.COM : Click to view the full PDF of IEC 61754-4:2022 RLV

IEC 61754-4 has been prepared by subcommittee 86B: Fibre optic interconnecting devices and passive components, of IEC technical committee 86: Fibre optics. It is an International Standard.

This third edition cancels and replaces the second edition published in 2013 and constitutes a technical revision.

This edition includes the following significant technical changes with respect to the previous edition:

a) the test method IEC 61300-3-22 for the compression force of the ferrule was added;
b) Annex A (informative) with cut out dimension requirements for testing the strength of mounted adaptors was added.

The text of this International Standard is based on the following documents:

Draft	Report on voting
86B/4563/FDIS	86B/4584/RVD

Full information on the voting for its approval can be found in the report on voting indicated in the above table.

The language used for the development of this International Standard is English.

This document was drafted in accordance with ISO/IEC Directives, Part 2, and developed in accordance with ISO/IEC Directives, Part 1 and ISO/IEC Directives, IEC Supplement, available at www.iec.ch/members_experts/refdocs. The main document types developed by IEC are described in greater detail at www.iec.ch/standardsdev/publications.

A list of all parts of the IEC 61754 series, under the general title *Fibre optic interconnecting devices and passive components – Fibre optic connector interfaces,* can be found on the IEC website.

Future standards in this series will carry the new general title as cited above. Titles of existing standards in this series will be updated at the time of the next edition.

The committee has decided that the contents of this document will remain unchanged until the stability date indicated on the IEC website under webstore.iec.ch in the data related to the specific document. At this date, the document will be

- reconfirmed,
- withdrawn,
- replaced by a revised edition, or
- amended.

IMPORTANT – The 'colour inside' logo on the cover page of this publication indicates that it contains colours which are considered to be useful for the correct understanding of its contents. Users should therefore print this document using a colour printer.

IECNORM.COM : Click to view the full PDF of IEC 61754-4:2022 RLV

FIBRE OPTIC INTERCONNECTING DEVICES AND PASSIVE COMPONENTS – FIBRE OPTIC CONNECTOR INTERFACES –

Part 4: Type SC connector family

1 Scope

This part of IEC 61754 ~~defines~~ specifies the standard interface dimensions for type SC family of connectors.

2 Normative references

The following documents are referred to in the text in such a way that some or all of their content constitutes requirements of this document. For dated references, only the edition cited applies. For undated references, the latest edition of the referenced document (including any amendments) applies.

~~IEC 61755-3-1, *Fibre optic connector optical interfaces – Part 3-1:Optical interface, 2,5 mm and 1,25 mm diameter cylindrical full zirconia PC ferrule, single mode fibre*~~

~~IEC 61755-3-2, *Fibre optic connector optical interfaces – Part 3-2: Optical interface, 2,5 mm and 1,25 mm diameter cylindrical full zirconia ferrules for 8 degrees angled-PC single mode fibres*~~

IEC 61300-3-22, *Fibre optic interconnecting devices and passive components – Basic test and measurement procedures – Part 3-22: Examinations and measurements – Ferrule compression force*

IEC 61754-1, *Fibre optic interconnecting devices and passive components – Fibre optic connector interfaces – Part 1: General and guidance*

3 Terms and definitions

For the purposes of this document, the terms and definitions given in IEC 61754-1 apply.

ISO and IEC maintain terminological databases for use in standardization at the following addresses:

- IEC Electropedia: available at http://www.electropedia.org/
- ISO Online browsing platform: available at http://www.iso.org/obp

4 Description

The parent connector for the type SC connector family is a single position plug connector characterized by a 2,5 mm nominal ferrule diameter. It includes a push-pull coupling mechanism which is spring loaded relative to the ferrule in the direction of the optical axis. The plug has a single male key which may be used to orient and limit the relative position between the connector and the component to which it is mated. The optical alignment mechanism of the connector is of a ~~resilient~~ sleeve style.

IECNORM.COM : Click to view the full PDF of IEC 61754-4:2022 RLV

This document defines the standard interface dimensions of active device receptacles for the type SC connectors. The receptacles are used to retain the connector plug and mechanically maintain the optical datum target of the plugs at a defined position within the receptacle housings.

5 Interfaces

This document contains the standard interfaces showed in Table 1.

Table 1 – Interfaces

Interface IEC 61754-4-1	Simplex plug connector interface – push/pull, physical contact (PC)
Interface IEC 61754-4-2	Simplex adaptor connector interface – push/pull
Interface IEC 61754-4-3	Duplex plug connector interface – push/pull, PC
Interface IEC 61754-4-4	Duplex adaptor connector interface – push/pull
Interface IEC 61754-4-5	Simplex plug connector interface – push/pull, angled PC (APC) 8°
Interface IEC 61754-4-6	Duplex plug connector interface – push/pull, APC 8°
Interface IEC 61754-4-X1	Simplex active device receptacle interface – for APC 8°connector plug
Interface IEC 61754-4-X2	Simplex active device receptacle interface – for PC connector plug
Interface IEC 61754-4-X3	Duplex active device receptacle interface – for APC 8°connector plug
Interface IEC 61754-4-X4	Duplex active device receptacle interface – for PC connector plug

~~The plug of interface IEC 61754-4-1 and interface IEC 61754-4-3 has a ferrule with a spherically polished endface (PC). The plug of interface IEC 61754-4-5 and interface IEC 61754-4-6 has a ferrule with a spherically polished angled endface which may take any of the angled PC (APC) forms and realizes a physical contact.~~

Table 2 shows the intermateability of interfaces.

Table 2 – Intermateability of interfaces

Plugs	Adaptors/active device receptacles					
	61754-4-2	61754-4-4	61754-4-X1	61754-4-X2	61754-4-X3	61754-4-X4
61754-4-1	Mate	Mate	Not mate	Mate	Not mate	Mate
61754-4-3	Not mate	Mate	Not mate	Not mate	Not mate	Mate
61754-4-5	Mate	Mate	Mate	Not mate	Mate	Not mate
~~61754-4-8~~ 61754-4-6	Not mate	Mate	Not mate	Not mate	Mate	Not mate

Figure 1 is an example of a simplex PC plug connector interface. Table 3 gives dimensions of the simplex PC plug connector interface and Table 4 gives the grade characteristics for simplex PC plug connector interface.

A chamfer or radius is allowed to a maximum depth of ~~1,2~~ 1,8 mm from the ferrule endface.

IECNORM.COM : Click to view the full PDF of IEC 61754-4:2022 RLV

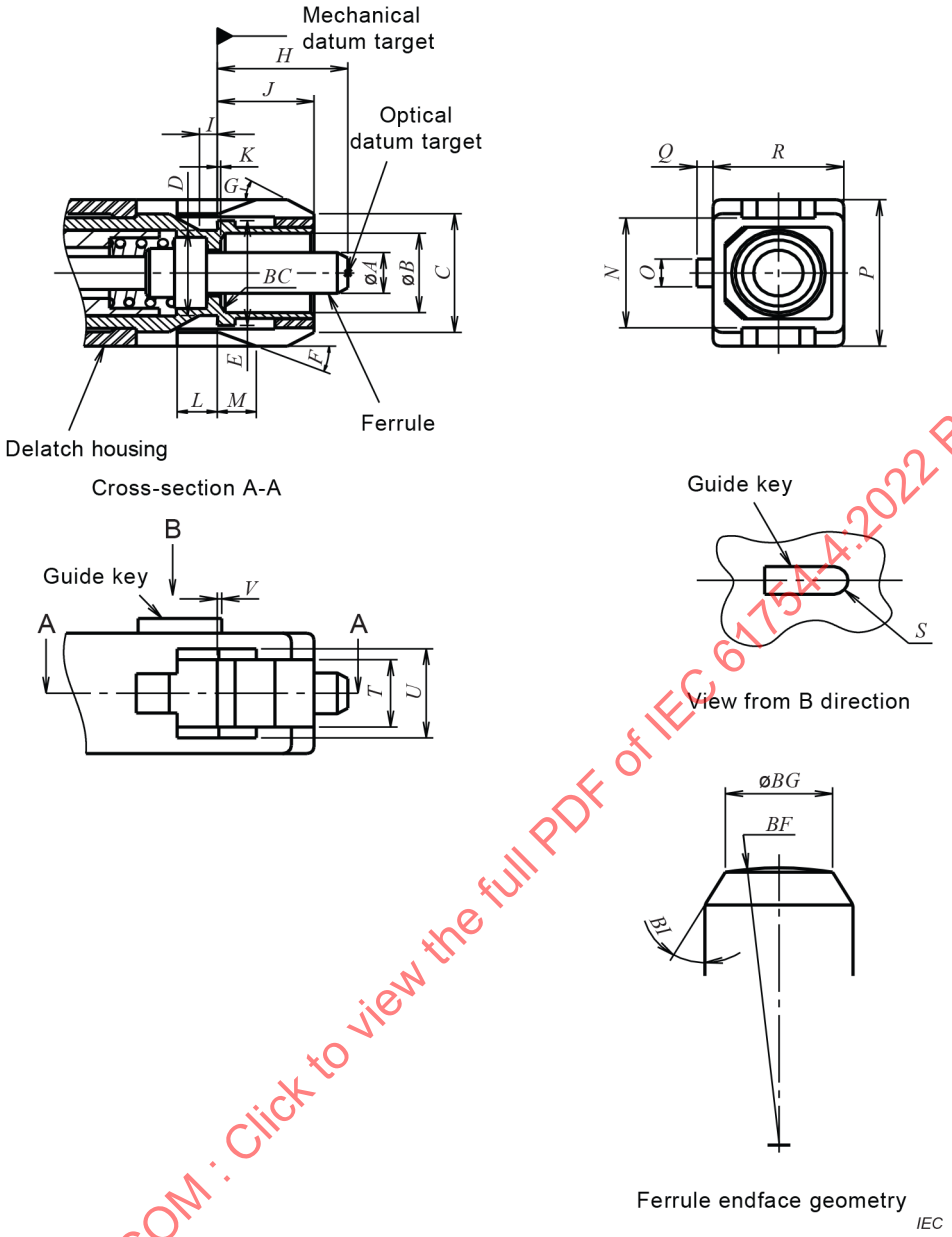

Figure 1 – Simplex PC plug connector interface

IECNORM.COM : Click to view the full PDF of IEC 61754-4:2022 RLV

Table 3 – Dimensions of the simplex PC plug connector interface

Reference	Dimensions		Remarks
	Minimum	Maximum	
A	See Table 4	~~2,500 mm~~	
B	4,8 mm	4,9 mm	
C	6,8 mm	7,4 mm	
D	4,9 mm	5,3 mm	
E	6,7 mm	6,8 mm	
F	19°	23°	Angle, unit in degrees
G	25°	35°	Angle, unit in degrees
H	7,15 mm	7,5 mm	[a]
I	0,8 mm	1,2 mm	
J	5,3 mm	5,5 mm	
K	–	0,05 mm	
L	2,11 mm	–	[b]
M	2,0 mm	2,8 mm	[b] [c]
N	6,6 mm	6,8 mm	
O	1,6 mm	1,8 mm	
P	8,89 mm	8,99 mm	
Q	0,8 mm	1,0 mm	
R	7,29 mm	7,39 mm	
S	0,8 mm	0,90 mm	Radius
T	4,05 mm	4,15 mm	
U	5,4 mm	5,6 mm	
V	0 mm	0,5 mm	[b]
~~*BC*~~	~~0°~~	~~0,5°~~	~~45° chamfer~~
~~*BF*~~	~~5 mm~~	~~30 mm~~	~~Radius,~~ [d]
~~*BG*~~	~~0,8 mm~~	~~–~~	~~Diameter~~ [e]
BC	0 mm	0,5 mm	Chamfer or round
BF	See IEC 61755-3-1		Radius [d]
BG	See IEC 61755-3-1		Diameter
BI	25°	35°	Angle, unit in degrees

[a] Dimension *H* is given for plug endface when not mated. ~~It~~ The ferrule is movable by a certain axial compression force, with direct contacting endfaces, and therefore dimension *H* is variable. Ferrule compression force shall be 7,8 N to 11,8 N when dimension *H* is 7,0 mm ± 0,1 mm. The compression force shall be measured according to IEC 61300-3-22.

[b] ~~Coupling sleeve shall be movable toward right and left direction. These dimensions are given when the coupling sleeve is moved in its most right-direction position.~~ The delatch housing shall be movable to the right or left. Dimensions *L*, *M* and *V* are given when the delatch housing is at the furthest right. Dimension *M* shall be negative, when the delatch housing is at the furthest left.

[c] ~~Dimension *M* shall be below 0 mm, when a coupling sleeve is moved to its most left-direction position.~~ The right end of *M* shall be at the left of the mechanical datum target when the delatch housing is at the furthest left.

[d] Dome eccentricity of the spherical polished endface shall be less than ~~70~~ 50 µm.

~~[e] See IEC 61755-3-1.~~

IECNORM.COM : Click to view the full PDF of IEC 61754-4:2022 RLV

Table 4 – Grade characteristics for simplex PC plug connector

Grade	Dimensions mm		Remarks
	A		
	Minimum	Maximum	
A	See IEC 61755-3-1		a
B	See IEC 61755-3-1		a
C	See IEC 61755-3-1		a
D	See IEC 61755-3-1		a
~~Am~~	~~2,497~~	~~2,500~~	~~b~~
~~Bm~~	~~2,497~~	~~2,500~~	~~b~~
~~Cm~~	~~2,494~~	~~2,500~~	~~b~~
A_m	Grade not specified at this time		a b
B_m	2,497	2,500	a b
C_m	2,494	2,500	a b

a ~~See IEC 61755-3-1.~~ Add the grade number to the interface reference number.

b Refer to future IEC 61755-6-1 for guidance[1].

Figure 2 is an example of a simplex adaptor connector interface. Table 5 gives dimensions of the simplex adaptor connector interface and Table 6 gives the grade of the simplex adaptor connector interface.

IECNORM.COM : Click to view the full PDF of IEC 61754-4:2022 RLV

[1] Under preparation. Stage at the time of publication: IEC/CDM 61755-6-1:2021.

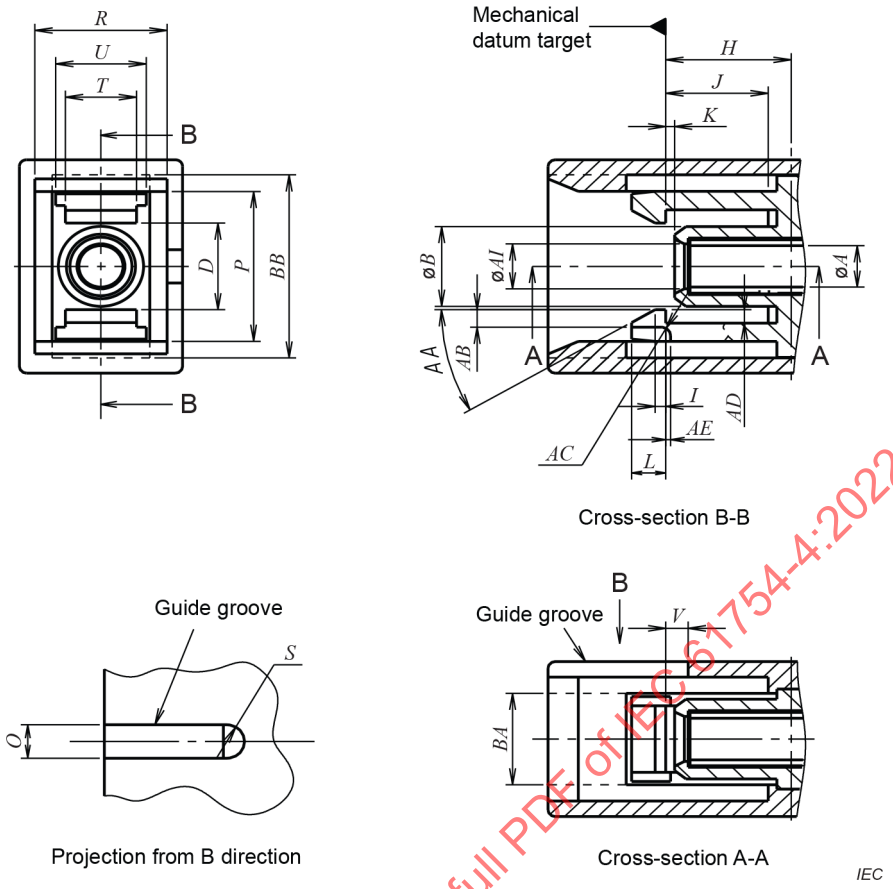

Figure 2 – Simplex adaptor connector interface

IECNORM.COM : Click to view the full PDF of IEC 61754-4:2022 RLV

Table 5 – Dimensions of the simplex adaptor connector interface

Reference	Dimensions		Remarks
	Minimum	Maximum	
A	See Table 6		
B	~~4,69~~ 4,39 mm	4,79 mm	
D	4,9 mm	5,5 mm	
H	6,9 mm	7,1 mm	
I	0,4 mm	0,8 mm	
J	5,51 mm	5,90 mm	
K	0,06 mm	1,00 mm	
L	1,9 mm	2,1 mm	
O	2,0 mm	2,2 mm	
P	9,0 mm	9,1 mm	
R	7,4 mm	7,5 mm	
S	1,0 mm	1,1 mm	Radius
T	3,80 mm	4,04 mm	
U	5,0 mm	5,3 mm	
V	0,6 mm	1,6 mm	
AA	27°	33°	Angle, unit in degrees
AB	0,8 mm	1,0 mm	
AC	0,4 mm	0,6 mm	Radius
AD	0,7 mm	0,8 mm	
AE	0,4 mm	0,6 mm	
AI	2,7 mm	2,8 mm	
BA	5,4 mm	5,6 mm	[a]
BB	10,8 mm	11,2 mm	[a]

[a] ~~It may be of a structure as shown by an alternate long and short dash line shown in Figure 2.~~ The dotted line structure in Figure 2 is a groove-shape preventing interference when the latch is deformed. It is optional.

Table 6 – Grade characteristics for simplex adaptor connector

Grade	Dimensions mm		Remarks
	A		
	Minimum	Maximum	
[a]			Resilient sleeve [a] [b]

[a] Add the grade number to the interface reference number.

[b] The connector alignment feature is a resilient sleeve. The feature shall accept a pin gauge shown in Figure 3 to the centre of the adaptor with a force of 2 N to 5,9 N under the condition that another pin gauge is inserted into the feature from the other side. The centre of the adaptor is defined by the right side position of dimension *H*.

Figure 3 is an example of a pin gauge for adaptor. Table 7 gives pin gauge dimensions.

IECNORM.COM : Click to view the full PDF of IEC 61754-4:2022 RLV

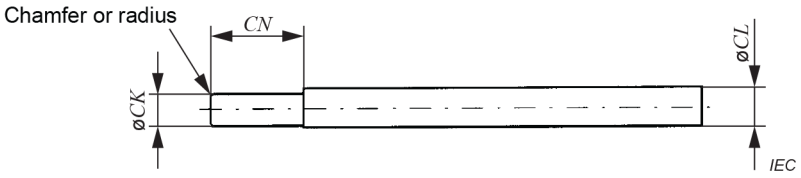

Figure 3 – Pin gauge for adaptor

Table 7 – Pin gauge dimensions

Reference	Dimensions mm		Remarks
	Minimum	Maximum	
CK	2,498 5	2,499 5	Surface roughness: grade N4 (0,2 µm radius)
CL	2,8	4,8	
CN	7	~~15~~	

Figure 4 is an example of a duplex PC plug connector interface. Table 8 gives dimensions of the duplex PC plug connector interface and Table 9 gives the grade of the duplex PC plug connector interface.

A chamfer or radius is allowed to a maximum depth of ~~1,2~~ 1,8 mm from the ferrule endface.

IECNORM.COM : Click to view the full PDF of IEC 61754-4:2022 RLV

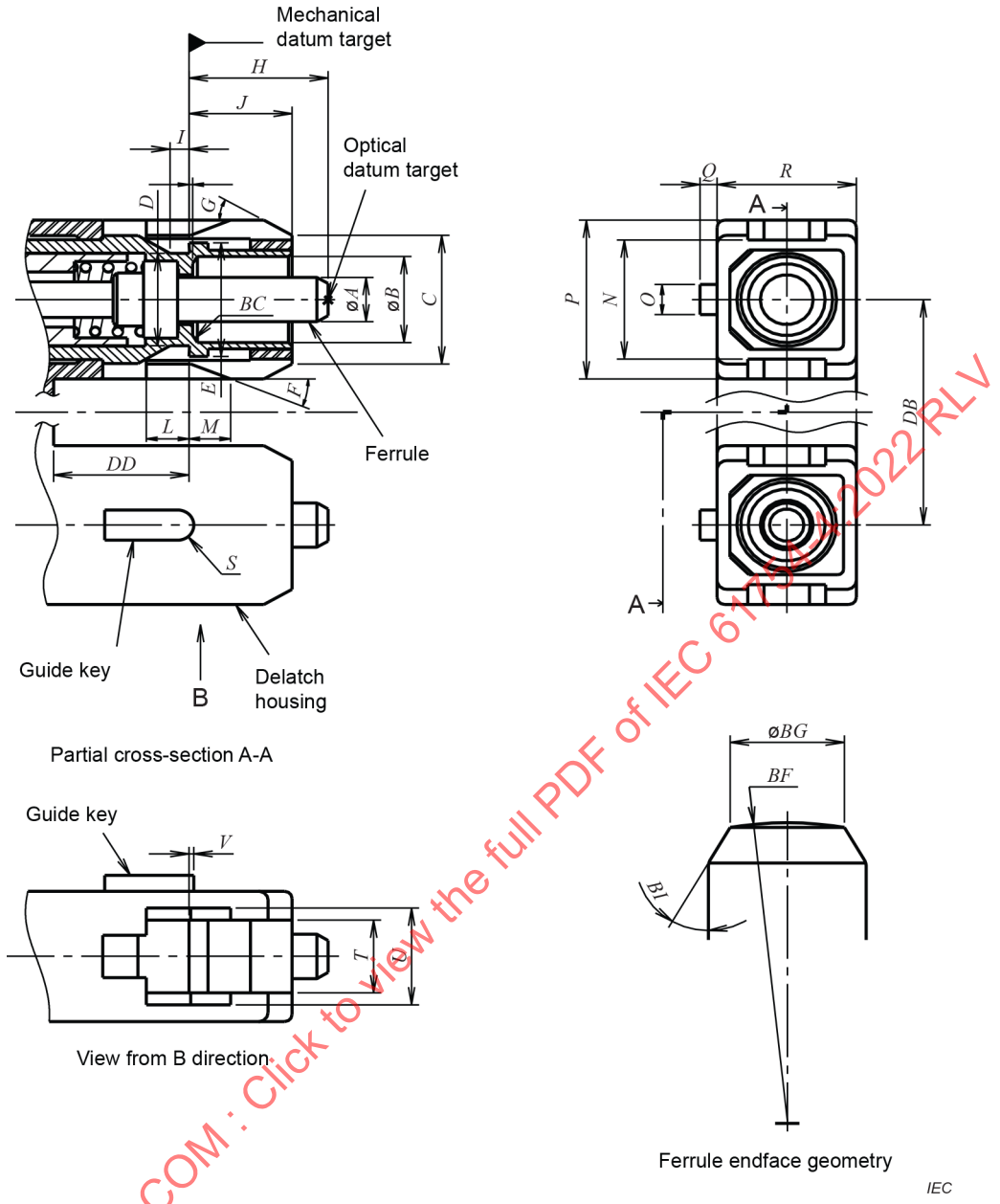

Figure 4 – Duplex PC plug connector interface

IECNORM.COM : Click to view the full PDF of IEC 61754-4:2022 RLV

Table 8 – Dimensions of the duplex PC plug connector interface

Reference	Dimensions		Remarks
	Minimum	Maximum	
A	See Table 9	~~2,500 mm~~	
B	4,8 mm	4,9 mm	
C	6,8 mm	7,4 mm	
D	4,9 mm	5,3 mm	
E	6,7 mm	6,8 mm	
F	19°	23°	Angle, unit in degrees
G	25°	35°	Angle, unit in degrees
H	7,15 mm	7,5 mm	a
I	0,8 mm	1,2 mm	
J	5,3 mm	5,5 mm	
K	–	0,05 mm	
L	2,11 mm	–	b
M	2,0 mm	2,8 mm	b c
N	6,6 mm	6,8 mm	
O	1,6 mm	1,8 mm	
P	8,79 mm	8,89 mm	d
Q	0,8 mm	1,0 mm	
R	7,29 mm	7,39 mm	
S	0,8 mm	0,9 mm	Radius
T	4,05 mm	4,15 mm	
U	5,4 mm	5,6 mm	
V	0 mm	0,5 mm	b
BC	0 mm	0,5 mm	~~Degree chamfer~~ Chamfer or round
~~*DD*~~	~~7~~	~~–~~	
~~*BF*~~	~~5 mm~~	~~30 mm~~	~~Radius,~~ [f]
~~*BG*~~	~~–~~	~~–~~	~~Diameter~~ [g]
~~*BI*~~	~~25°~~	~~35°~~	
BF	See IEC 61755-3-1		Radius [f]
BG	See IEC 61755-3-1		Diameter
BI	25°	35°	Angle, unit in degrees
DB	12,65 mm	12,75 mm	e
DD	7 mm	35 mm	

IECNORM.COM : Click to view the full PDF of IEC 61754-4:2022 RLV

[a] Dimension H is given for plug endface when not mated. ~~It~~ The ferrule is movable by a certain axial compression force, with direct contacting endfaces, and therefore dimension H is variable. Ferrule compression force shall be 7,8 N to 11,8 N when dimension H is 7,0 mm ± 0,1 mm. The compression force shall be measured according to IEC 61300-3-22.

[b] The delatch housing shall be movable ~~towards right and left direction~~ to the right or left. Dimensions L, M and V are given when the delatch housing is ~~moved in its extreme right-direction position~~ at the furthest right.

[c] ~~Dimension *M* shall be below 0 mm, when the delatch housing is moved to its most left-direction position.~~ The right end of M shall be at the left of the mechanical datum target when the delatch housing is at the furthest left.

[d] The delatch housing may be a rigid sleeve. When two simplex plugs are retained together by a flexible sleeve, dimension P shall be from 8,89 mm to 8,99 mm.

[e] The delatch housing may be a rigid sleeve. When two simplex plugs are retained together by a flexible sleeve, dimension DB shall be from 12,25 mm to 13,15 mm.

[f] The dome eccentricity of the spherical polished endface shall be less than ~~70~~ 50 µm.

~~[g] See IEC 61755-3-1.~~

Table 9 – Grade characteristics for duplex PC plug connector

Grade	Dimensions mm		Remarks
	A		
	Minimum	Maximum	
A	See IEC 61755-3-1		[a]
B	See IEC 61755-3-1		[a]
C	See IEC 61755-3-1		[a]
D	See IEC 61755-3-1		[a]
~~Am~~	~~2,497~~	~~2,500~~	~~[b]~~
~~Bm~~	~~2,497~~	~~2,500~~	~~[b]~~
A_m	Grade not specified at this time		[a] [b]
B_m	2,497	2,500	[a] [b]
C_m	2,494	2,500	[a] [b]

[a] ~~See IEC 61755-3-1.~~ Add the grade number to the interface reference number.

[b] Refer to future IEC 61755-6-1 for guidance.

Figure 5 is an example of a duplex adaptor connector interface. Table 10 gives dimensions of the duplex adaptor connector interface and Table 11 gives the grade of the duplex adaptor connector interface.

IECNORM.COM : Click to view the full PDF of IEC 61754-4:2022 RLV

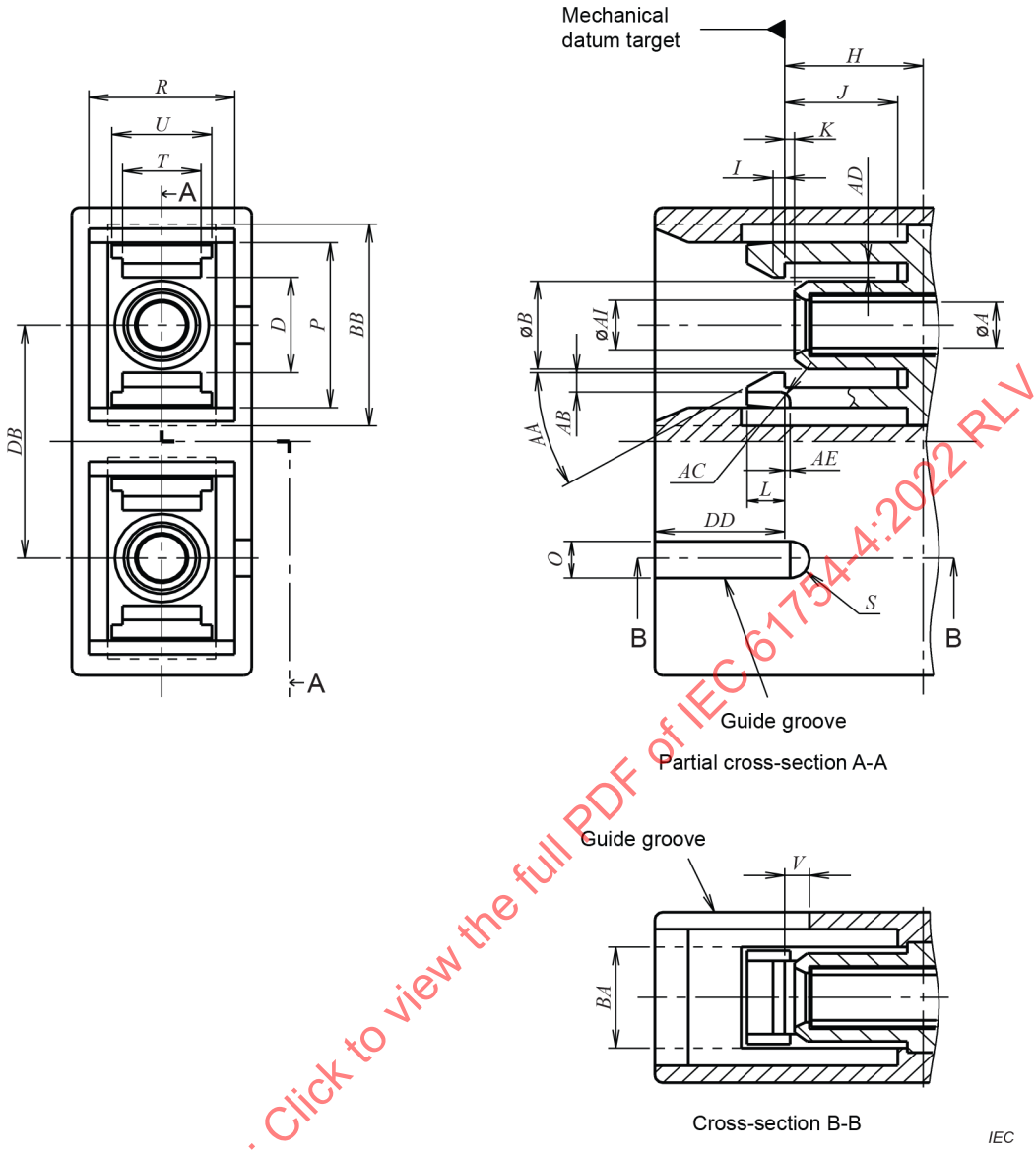

Figure 5 – Duplex adaptor connector interface

IECNORM.COM : Click to view the full PDF of IEC 61754-4:2022 RLV

Table 10 – Dimensions of the duplex adaptor connector interface

Reference	Dimensions mm		Remarks
	Minimum	Maximum	
A	See Table 11		
B	4,39 mm	4,69 mm	
D	4,9 mm	5,5 mm	
H	6,9 mm	7,1 mm	
I	0,4 mm	0,8 mm	
J	5,51 mm	5,90 mm	
K	0,06 mm	1,00 mm	
L	1,9 mm	2,1 mm	
O	2,0 mm	2,2 mm	
P	9,0 mm	9,1 mm	
R	7,4 mm	7,5 mm	
S	1,0 mm	1,1 mm	Radius
T	3,80 mm	4,04 mm	
U	5,0 mm	5,3 mm	
V	0,6 mm	1,6 mm	
AA	27°	33°	Angle, unit in degrees
AB	0,8 mm	1,0 mm	
AC	0,4 mm	0,6 mm	Radius
AD	0,7 mm	0,8 mm	
AE	0,4 mm	0,6 mm	
AI	2,7 mm	2,8 mm	
BA	5,4 mm	5,6 mm	[a]
BB	10,8 mm	11,2 mm	[a]
DB	12,65 mm	12,75 mm	
DD	–	6,99 mm	

[a] ~~It may be of a structure as shown by a dash line in Figure 5.~~ The dotted line structure in Figure 5 is a groove-shape preventing interference when the latch is deformed. It is optional.

Table 11 – Grade of the duplex adaptor connector

Grade	Dimensions mm		Remarks
	A		
	Minimum	Maximum	
[a]	–	–	Resilient sleeve [a b]

[a] Add grade number to the interface reference number.

[b] The connector alignment feature is a resilient sleeve. The feature shall accept a pin gauge shown in Figure 3 to the centre of the adaptor with a force of 2,0 N to 5,9 N under the condition that another pin gauge is inserted into the feature from the other side. The centre of the adaptor is defined by the right side position of dimension *H*.

IECNORM.COM : Click to view the full PDF of IEC 61754-4:2022 RLV

Figure 6 is an example of a simplex ~~APC~~ angled PC plug connector interface. Table 12 gives dimensions of the simplex ~~APC~~ angled PC plug connector interface. The detail dimensions of optical interfaces for APC are defined in IEC 61755-3-2.

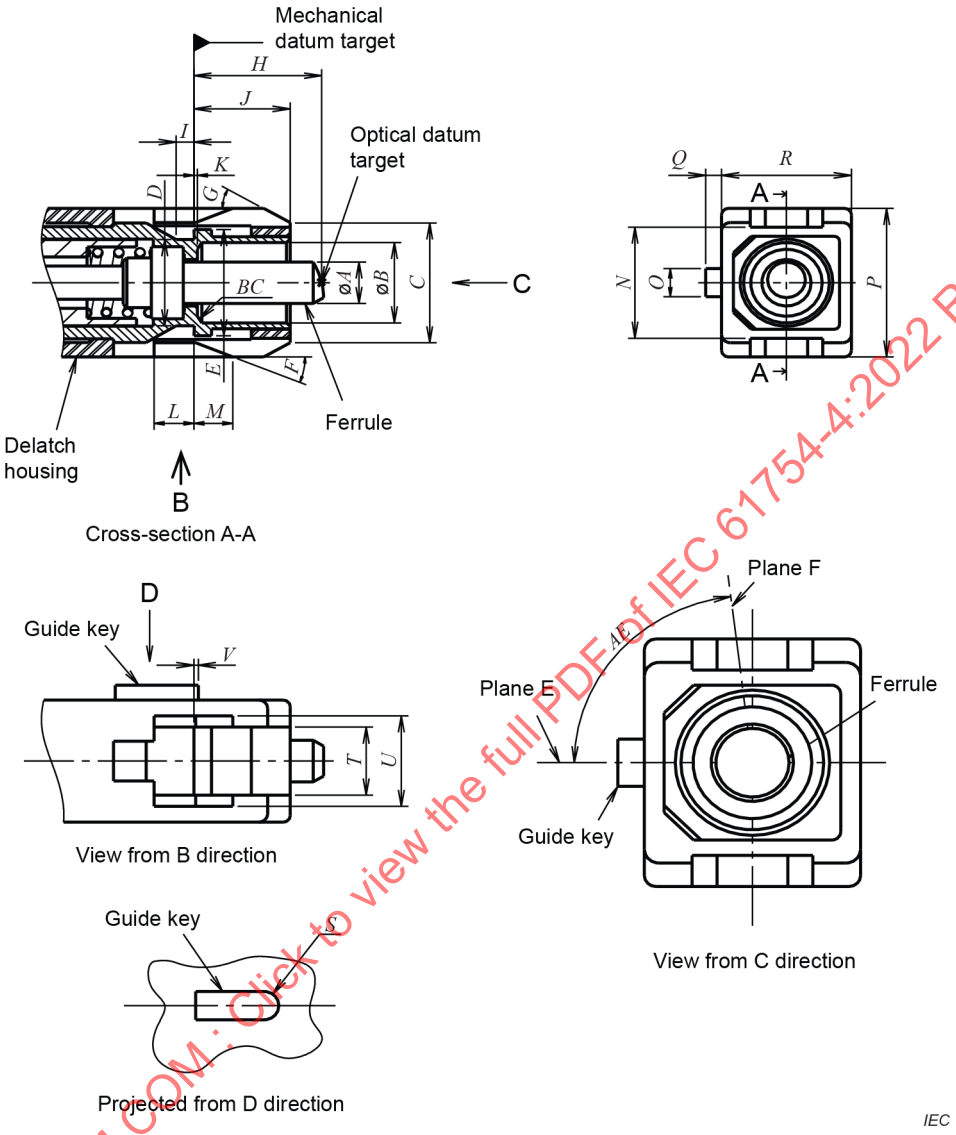

Figure 6 – Simplex ~~APC~~ angled PC plug connector interface *(1 of 2)*

IECNORM.COM : Click to view the full PDF of IEC 61754-4:2022 RLV

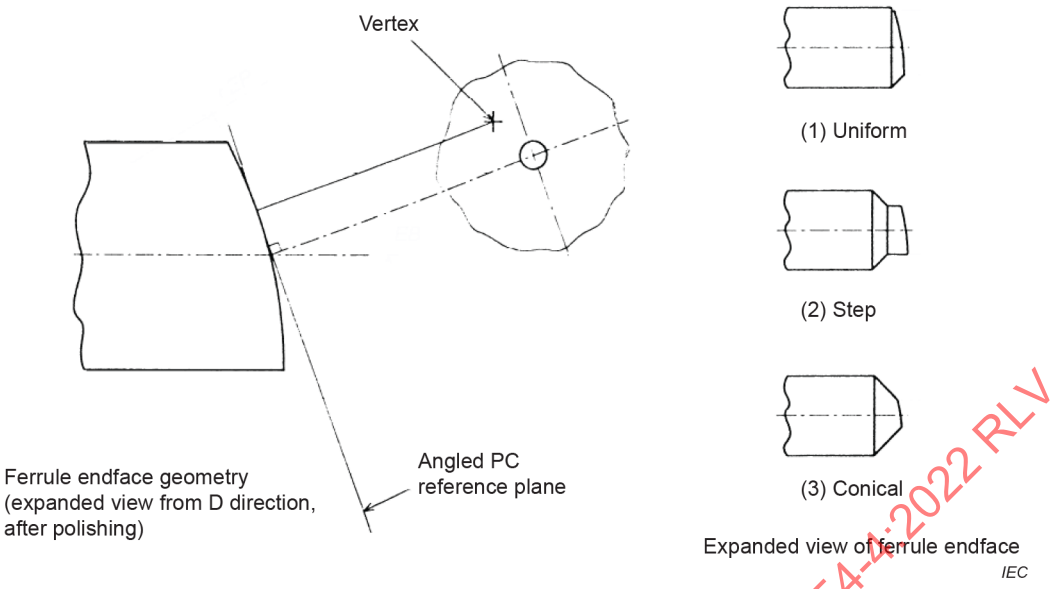

Figure 6 – Simplex ~~APC~~ angled PC plug connector interface *(2 of 2)*

Table 12 – Dimensions of the simplex ~~APC~~ angled PC plug connector interfaces

Reference	Dimensions		Remarks
	Minimum	Maximum	
A	~~2,500 mm~~ See IEC 61755-3-2		a
B	4,8 mm	4,9 mm	
C	6,8 mm	7,4 mm	
D	4,9 mm	5,3 mm	
E	6,7 mm	6,8 mm	
F	19°	23°	Angle, unit in degrees
G	25°	35°	Angle, unit in degrees
H	7,15 mm	7,5 mm	b
I	0,8 mm	1,2 mm	
J	5,3 mm	5,5 mm	
K	–	0,05 mm	
L	2,11 mm	–	c
M	2,0 mm	2,8 mm	c d
N	6,6 mm	6,8 mm	
O	1,6 mm	1,8 mm	
P	8,89 mm	8,99 mm	
Q	0,8 mm	1,0 mm	
R	7,29 mm	7,39 mm	
S	0,8 mm	0,9 mm	Radius
T	4,05 mm	4,15 mm	
U	5,4 mm	5,6 mm	
V	0 mm	0,5 mm	c
BC	0 mm	0,5 mm	~~Degree chamfer~~ Chamfer or round
EA	–	–	e

IECNORM.COM : Click to view the full PDF of IEC 61754-4:2022 RLV

[a] ~~Detail dimensions and the grade number of the ferrule is required in IEC 61755-3-2.~~ Add the grade number to the interface reference number.

[b] Dimension H is given for plug endface when not mated. It is movable by a certain axial compression force, with direct contacting endfaces, and therefore dimension H is variable. Ferrule compression force shall be 7,8 N to 11,8 N when dimension H is 7,0 mm ± 0,1 mm. The compression force shall be measured according to IEC 61300-3-22.

[c] The delatch housing shall be movable to the right ~~and~~ or left ~~directions~~. Dimensions L, M and V are given when the delatch housing is ~~moved in its extreme right direction position~~ at the furthest right.

[d] ~~Dimension M shall be below 0 mm, when the delatch housing is moved to its extreme left direction position.~~ The right end of M shall be at the left of the mechanical datum target when the delatch housing is at the furthest left.

[e] Dimension EA is defined as an angle between two planes: one plane, plane ~~A~~ E, passes through the axis of the ferrule and axis of symmetry of the key of the angled endface connector plug. The other plane, plane ~~B~~ F, passes through the axis of the ferrule and the normal to the angled PC reference plane. Dimension EA shall be 90° as a basic dimension.

Figure 7 is an example of a duplex ~~APC~~ angled PC plug connector interface. Table 13 gives dimensions of the duplex ~~APC~~ angled PC plug connector interface. The detail dimensions of optical interfaces for APC are defined in IEC 61755-3-2.

IECNORM.COM : Click to view the full PDF of IEC 61754-4:2022 RLV

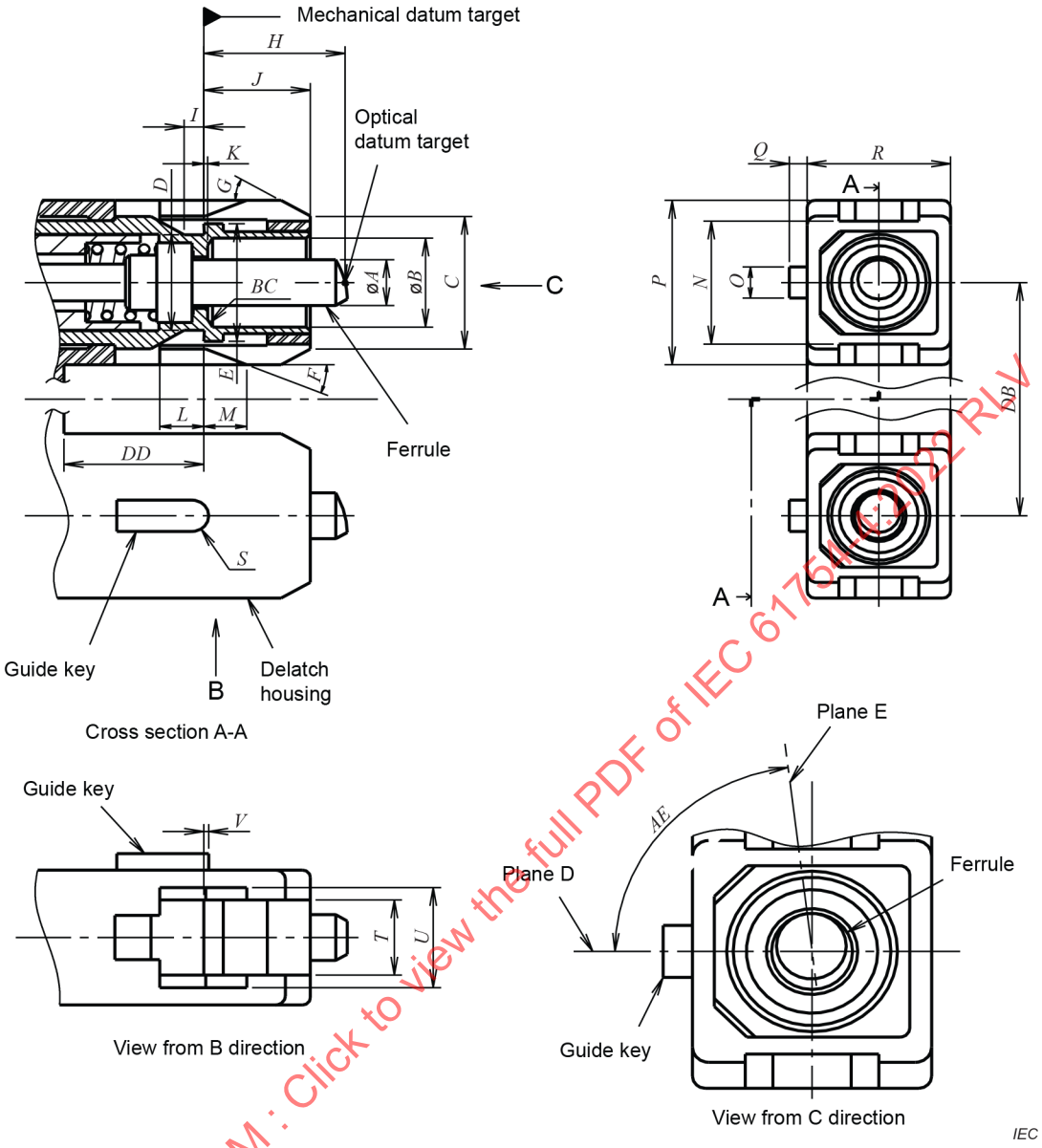

Figure 7 – Duplex ~~APC~~ angled PC plug connector interface *(1 of 2)*

IECNORM.COM : Click to view the full PDF of IEC 61754-4:2022 RLV

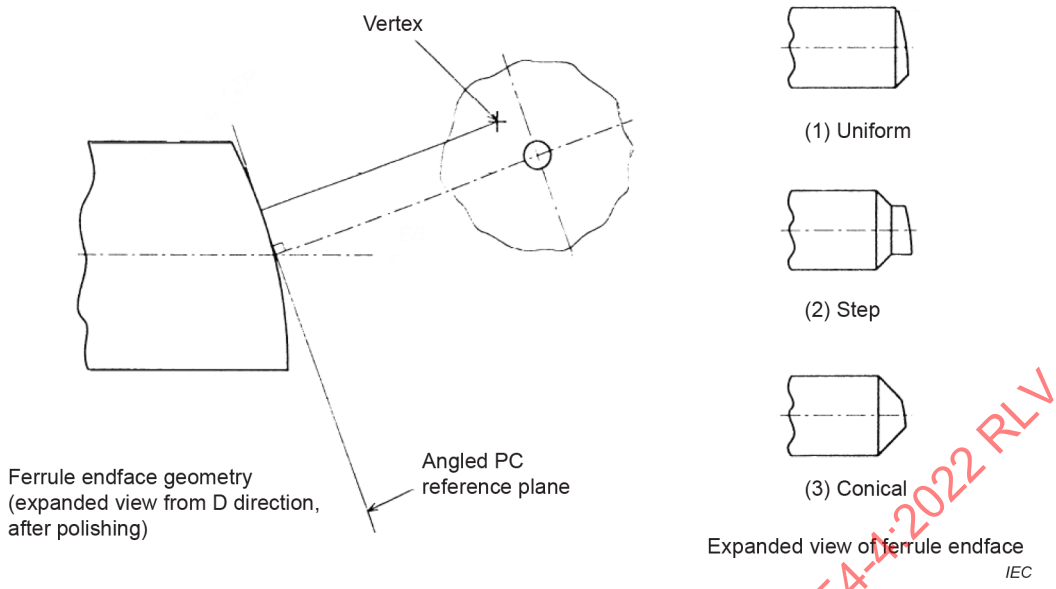

Figure 7 – Duplex ~~APC~~ angled PC plug connector interface *(2 of 2)*

Table 13 – Dimensions of the duplex ~~APC~~ angled PC plug connector interfaces

Reference	Dimensions		Remarks
	Minimum	Maximum	
A	~~2,500 mm~~ See IEC 61755-3-2		a
B	4,8 mm	4,9 mm	
C	6,8 mm	7,4 mm	
D	4,9 mm	5,3 mm	
E	6,7 mm	6,8 mm	
F	19°	23°	Angle, unit in degrees
G	25°	35°	Angle, unit in degrees
H	7,15 mm	7,5 mm	b
I	0,8 mm	1,2 mm	
J	5,3 mm	5,5 mm	
K	–	0,05 mm	
L	2,11 mm	–	c
M	2 mm	2,8 mm	c d
N	6,6 mm	6,8 mm	
O	1,6 mm	1,8 mm	
P	8,79 mm	8,89 mm	e
Q	0,8 mm	1,0 mm	
R	7,29 mm	7,39 mm	
S	0,8 mm	0,9 mm	Radius
T	4,05 mm	4,15 mm	
U	5,4 mm	5,6 mm	
V	0 mm	0,5 mm	c
BC	0 mm	0,5 mm	~~Degree chamfer~~ Chamfer or round
DB			f

IECNORM.COM : Click to view the full PDF of IEC 61754-4:2022 RLV

Reference	Dimensions		Remarks
	Minimum	Maximum	
DD	7,0 mm		
EA	–	–	g

a ~~Detail dimensions and the grade number of the ferrule is required in IEC 61755-3-2.~~ Add the grade number to the interface reference number.

b Dimension *H* is given for plug endface when not mated. ~~It~~ The ferrule is movable by a certain axial compression force, with direct contacting endfaces, and therefore dimension *H* is variable. Ferrule compression force shall be 7,8 N to 11,8 N when dimension *H* is 7,0 mm ± 0,1 mm. The compression force shall be measured according to IEC 61300-3-22.

c The delatch housing shall be movable to the right ~~and~~ or left ~~directions~~. Dimensions *L*, *M* and *V* are given when the delatch housing is ~~moved in its extreme right direction position~~ at the furthest right.

d ~~Dimension *M* shall be below 0 mm, when the delatch housing is moved to its extreme left direction position.~~ The right end of *M* shall be at the left of the mechanical datum target when the delatch housing is at the furthest left.

e The delatch housing may be rigid sleeve. When two simplex plugs are retained together by a flexible sleeve, dimension *P* shall be from 8,89 mm to 8,99 mm.

f When two simplex plugs are retained together by a flexible sleeve, dimension *DB* shall be from 12,25 mm to 13,15 mm.

g Dimension *EA* is defined as an angle between two planes: one plane, plane ~~A~~ D, passes through the axis of the ferrule and axis of symmetry of the key of the angled endface connector plug. The other plane, plane ~~B~~ E, passes through the axis of the ferrule and the normal to the angled PC reference plane. Dimension *EA* shall be 90° as a basic dimension.

Figure 8 is an example of a simplex active device receptacle interface for angled PC connector plug. Table 14 gives dimensions of the simplex active device receptacle interface for angled PC connector plug.

Table 15 and Table 16 give alignment feature grade and mechanical stop feature grade for the simplex active device receptacle interface for angled PC connector plug.

IECNORM.COM : Click to view the full PDF of IEC 61754-4:2022 RLV

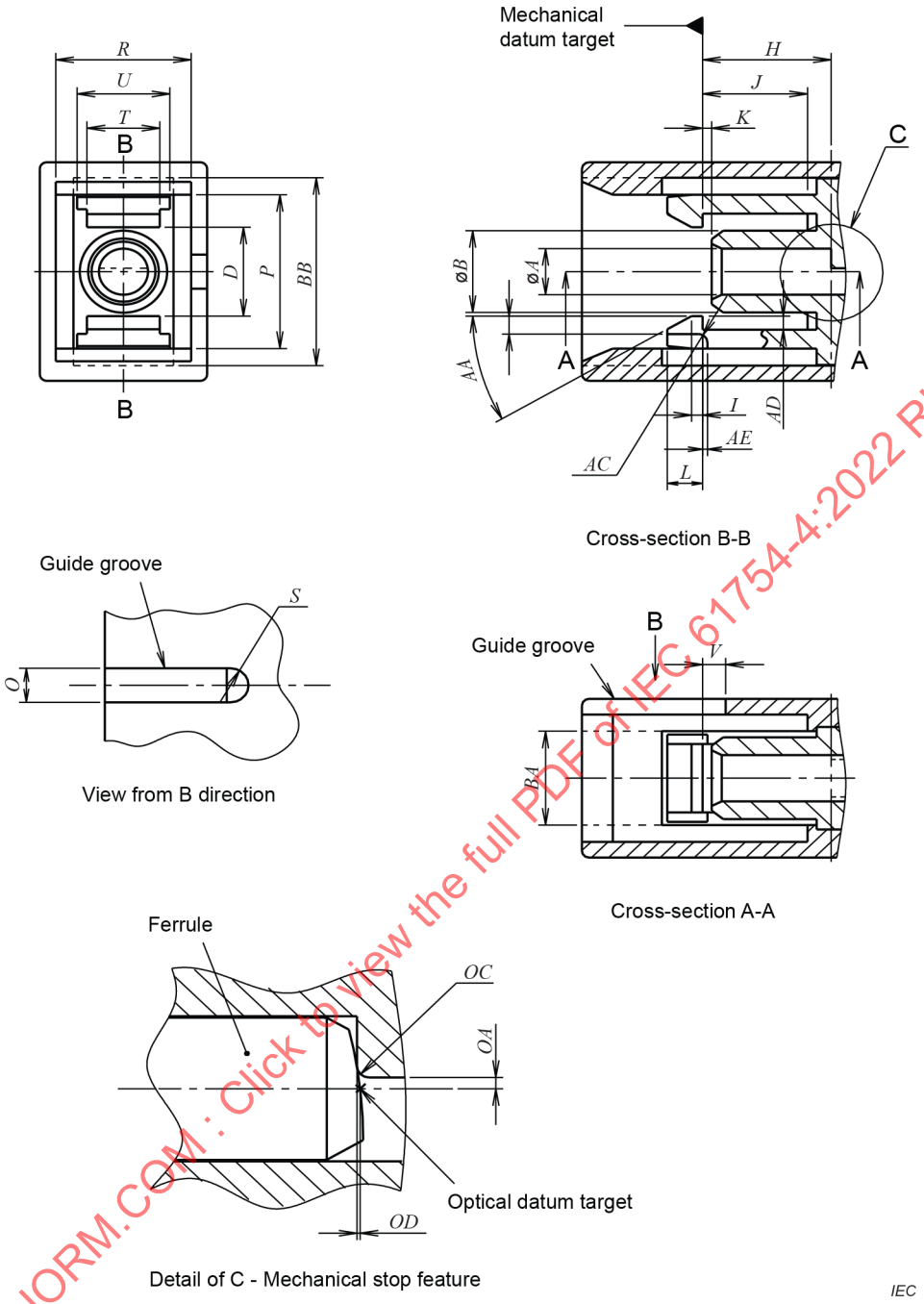

Figure 8 – Simplex active device receptacle interface for ~~APC~~ angled PC connector plug

IECNORM.COM : Click to view the full PDF of IEC 61754-4:2022 RLV

Table 14 – Dimensions of the simplex active device receptacle interface for ~~APC~~ angled PC connector plug

Reference	Dimensions		Remarks
	Minimum	Maximum	
A	See Table 15		
B	4,39 mm	4,79 mm	
D	4,9 mm	5,5 mm	
H	6,9 mm	7,1 mm	a
I	0,4 mm	0,8 mm	
J	5,51 mm	5,90 mm	
K	0,06 mm	1,00 mm	
L	1,9 mm	2,1 mm	
O	2,0 mm	2,2 mm	
P	9,0 mm	~~9,2~~ 9,1 mm	
R	7,4 mm	7,5 mm	
S	1,0 mm	1,1 mm	Radius
T	3,80 mm	4,04 mm	
U	5,0 mm	5,3 mm	
V	0,6 mm	1,6 mm	
AA	27°	33°	Angle, unit in degrees
AB	0,8 mm	1,0 mm	
AC	0,4 mm	0,6 mm	Radius
AD	0,7 mm	0,8 mm	
AE	0,4 mm	0,6 mm	
BA	5,4 mm	5,6 mm	b
BB	11,0 mm	11,2 mm	~~B~~ b
OA	See Table 16		Radius [a]
OC	0 mm	0,05 mm	Radius
OD	See Table 16		a

[a] An example of a mechanical stop feature is shown in Figure 8. A mechanical stop ~~feature~~ is required ~~in IEC 61755-3-2 within the clearances specified in Table 15 depending upon the application~~ to position the fibre ferrule to maintain the optical datum target within the active device receptacle and to avoid damaging the component within the receptacle.

[b] ~~This may be a structure as shown by a dashed line shown in Figure 8.~~ The dotted line structure in Figure 8 is a groove-shape preventing interference when the latch is deformed. It is optional.

IECNORM.COM : Click to view the full PDF of IEC 61754-4:2022 RLV

Table 15 – Alignment feature grade of the simplex active device receptacle interface for angled PC connector plug

Grade	Dimensions mm		Remarks
	A		
	Minimum	Maximum	
1	2,500	2,502	a b
2	2,501	2,504	a b
3	2,501	2,510	a b
4	2,501	2,525	a b
5	–	–	Resilient sleeve b c

a The connector alignment feature is a rigid bore.

b Add the grade number to the interface reference number.

c The connector alignment feature is a resilient sleeve. The feature accepts a pin gauge shown in Figure 3 to the centre of the receptacle with a force of 2,9 N to 5,9 N. The centre of the receptacle is defined by the right side position of dimension *H*. The measurement is performed using a single pin gauge.

Table 16 – Mechanical stop feature grade of the simplex active device receptacle interface for angled PC connector plug

Grade	Dimensions mm		Dimensions µm	Remarks
	OA minimum	*OA* maximum	*OD* clearance	
A	0,150	0,2	±15	a b
B	0,150	0,35	±40	a b
N	0,150	–		a b
X				~~a~~ b c

a The connector alignment feature is a rigid bore.

b Add the grade number to the alignment feature grade number.

c The connector alignment feature is a resilient sleeve.

Figure 9 is an example of a simplex active device receptacle interface for PC connector plug. Table 17 gives dimensions of the simplex active device receptacle interface for PC connector plug.

Table 18 and Table 19 give alignment feature grade and mechanical stop feature grade for simplex active device receptacle interface for PC connector plug.

IECNORM.COM : Click to view the full PDF of IEC 61754-4:2022 RLV

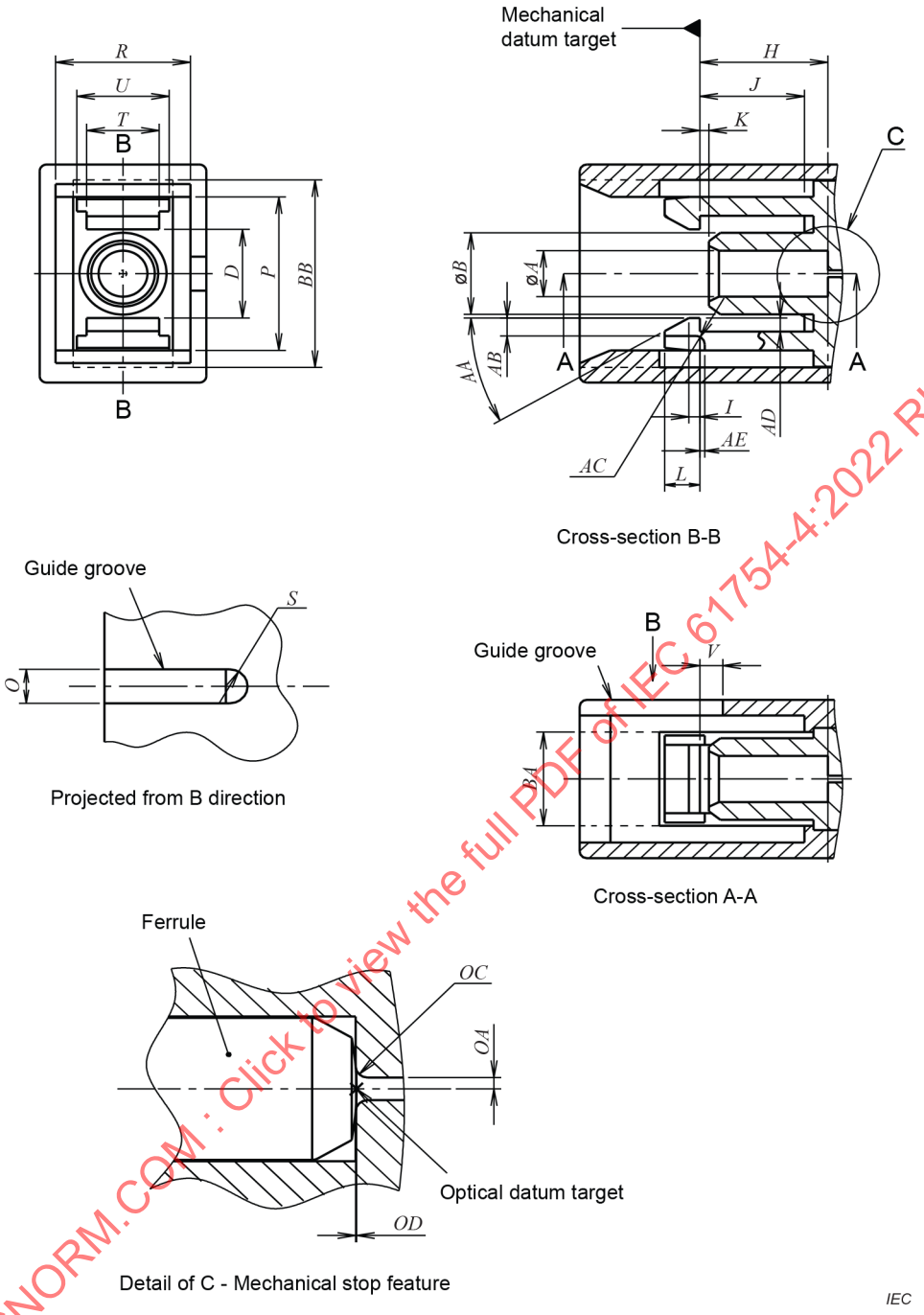

Figure 9 – Simplex active device receptacle interface for PC connector plug

IECNORM.COM : Click to view the full PDF of IEC 61754-4:2022 RLV

Table 17 – Dimensions of the simplex active device receptacle interface for PC connector plug

Reference	Dimensions		Remarks
	Minimum	Maximum	
A	See Table 18		
B	4,39 mm	4,79 mm	
D	4,9 mm	5,5 mm	
H	6,9 mm	7,1 mm	[a]
I	0,4 mm	0,8 mm	
J	5,51 mm	5,90 mm	
K	0,06 mm	1,00 mm	
L	1,9 mm	2,1 mm	
O	2,0 mm	2,2 mm	
P	9,0 mm	9,2 mm	
R	7,4 mm	7,5 mm	
S	1,0 mm	1,1 mm	Radius
T	3,80 mm	4,04 mm	
U	5,0 mm	5,3 mm	
V	0,6 mm	1,6 mm	
AA	27°	33°	Angle, unit in degrees
AB	0,8 mm	1,0 mm	
AC	0,4 mm	0,6 mm	Radius
AD	0,7 mm	0,8 mm	
AE	0,4 mm	0,6 mm	
BA	5,4 mm	5,6 mm	[b]
BB	11,0 mm	11,2 mm	[b]
OA	See Table 19		Radius [a]
OC	0 mm	0,15 mm	Radius
OD	See Table 19		[a]

[a] An example of a mechanical stop feature is shown in Figure 9. ~~A mechanical stop feature is required in Table 3 within the clearances specified in Table 18 depending upon the application.~~ A mechanical stop is required to position the fibre ferrule to maintain the optical datum target within the active device receptacle and to avoid damaging the component within the receptacle.

[b] ~~This may be a structure as shown by a dashed line shown in Figure 9.~~ The dotted line structure in Figure 9 is a groove-shape preventing interference when the latch is deformed. It is optional.

IECNORM.COM : Click to view the full PDF of IEC 61754-4:2022 RLV

Table 18 – Alignment feature grade of the simplex active device receptacle interface for PC connector plug

Grade	Dimensions ~~mm~~		Remarks
	A		
	Minimum	Maximum	
1	2,500	2,502	a,b
2	2,501	2,504	a,b
3	2,501	2,510	a,b
4	2,501	2,525	a,b
5	–	–	Resilient sleeve b,c

[a] The connector alignment feature is a rigid bore.

[b] Add the grade number to the interface reference number.

[c] The connector alignment feature is a resilient sleeve. The feature accepts a pin gauge shown in Figure 3 to the centre of the receptacle with a force of 2 N to 5,9 N. The centre of the receptacle is defined by the right side position of dimension *H*.

Table 19 – Mechanical stop feature grade of the simplex active device receptacle interface for PC connector plug

Grade	Dimensions mm		Dimensions µm	Remarks
	OA minimum	*OA* maximum	*OD* clearance	
A	0,150	0,2	±5	a b
B	0,150	0,35	±10	a b
N	0,150	1,250		a b
X				b c

[a] The connector alignment feature is a rigid bore.

[b] Add the grade number to the alignment feature grade number.

[c] The connector alignment feature is a resilient sleeve.

Figure 10 is an example of a duplex active device receptacle interface for angled PC connector plug. Table 20 gives dimensions of the duplex active device receptacle interface for angled PC connector plug.

Table 21 and Table 22 give alignment feature grade and mechanical stop feature grade for the duplex active device receptacle interface for angled PC connector plug.

IECNORM.COM : Click to view the full PDF of IEC 61754-4:2022 RLV

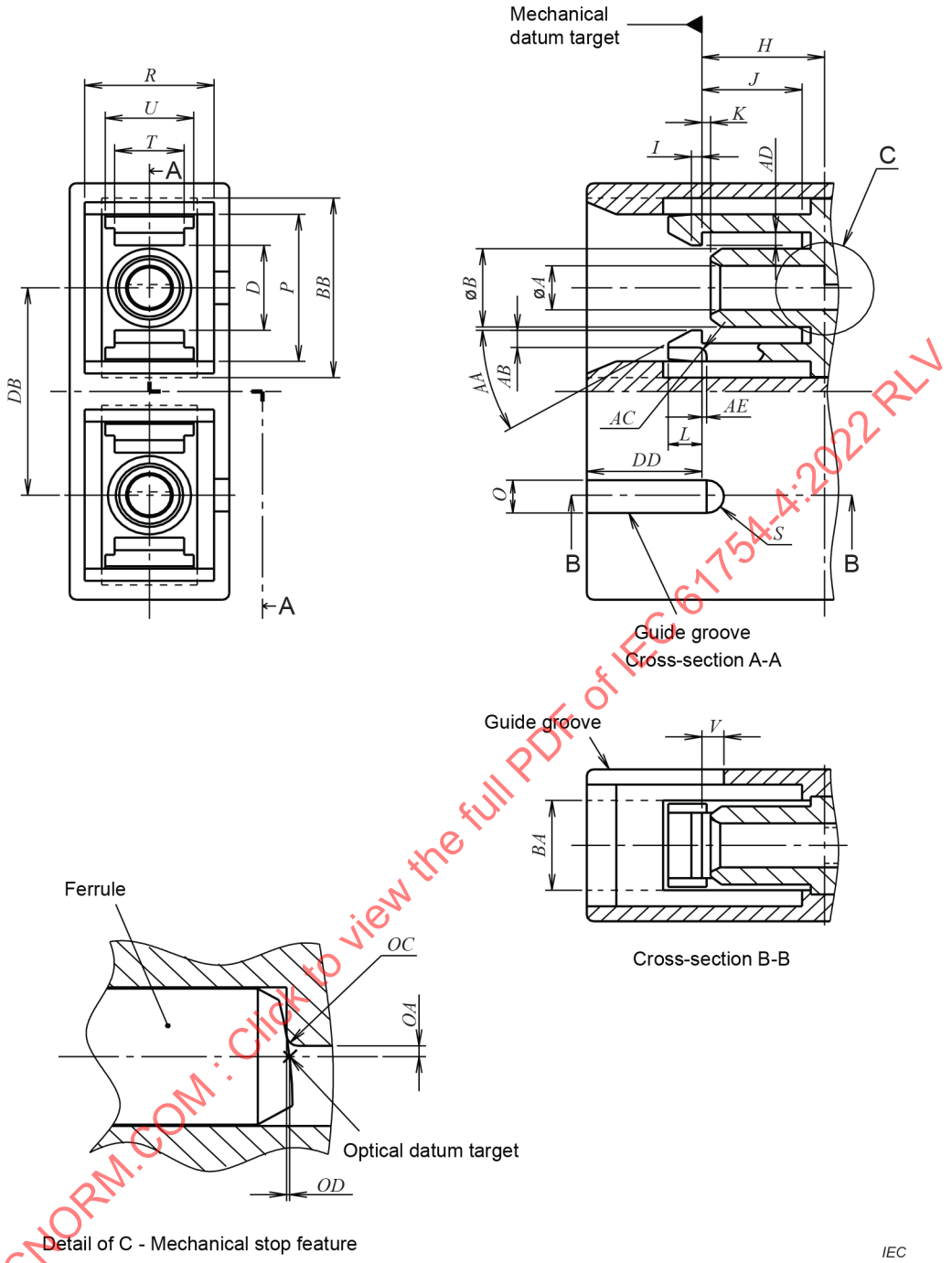

Figure 10 – Duplex active device receptacle interface for ~~APC~~ angled PC connector plug

IECNORM.COM : Click to view the full PDF of IEC 61754-4:2022 RLV

Table 20 – Dimensions of the duplex active device receptacle interface for ~~APC~~ angled PC connector plug

Reference	Dimensions		Remarks
	Minimum	Maximum	
A	See Table 21		
B	4,39 mm	4,69 mm	
D	4,9 mm	5,5 mm	
H	6,9 mm	7,1 mm	[a]
I	0,4 mm	0,8 mm	
J	5,51 mm	5,90 mm	
K	0,06 mm	1,00 mm	
L	1,9 mm	2,1 mm	
O	2,0 mm	2,2 mm	
P	9,0 mm	9,1 mm	
R	7,4 mm	7,5 mm	
S	1,0 mm	1,1 mm	Radius
T	3,80 mm	4,04 mm	
U	5,0 mm	5,3 mm	
V	0,6 mm	1,6 mm	
AA	27°	33°	Angle, unit in degrees
AB	0,8 mm	1,0 mm	
AC	0,4 mm	0,6 mm	Radius
AD	0,7 mm	0,8 mm	
AE	0,4 mm	0,6 mm	
BA	5,4 mm	5,6 mm	[b]
BB	11,0 mm	11,2 mm	[b]
DB	12,65 mm	12,75 mm	
DD	–	6,99 mm	
OA	See Table 22		Radius [a]
OC	0 mm	0,15 mm	Radius
OD	See Table 22		[a]

[a] ~~It may be a structure as shown by a dashed line shown in Figure 10.~~ The dotted line structure in Figure 10 is a groove-shape preventing interference when the latch is deformed. It is optional.

[b] An example of a mechanical stop feature is shown in Figure 10. ~~A mechanical stop feature is required in IEC 61755-3-2 within the clearances specified in Table 21 depending upon the application.~~ A mechanical stop is required to position the fibre ferrule to maintain the optical datum target within the active device receptacle and to avoid damaging the component within the receptacle.

IECNORM.COM : Click to view the full PDF of IEC 61754-4:2022 RLV

Table 21 – Alignment feature grade of the duplex active device receptacle interface for angled PC connector plug

Grade	Dimensions mm		Remarks
	A		
	Minimum	Maximum	
1	2,500	2,502	a b
2	2,501	2,504	a b
3	2,501	2,510	a b
4	2,501	2,525	a b
5	–	–	Resilient sleeve b c

a The connector alignment feature is a rigid bore.

b Add the grade number to the interface reference number.

c The connector alignment feature is a resilient sleeve. The feature accepts a pin gauge shown in Figure 3 to the centre of the receptacle with a force of 2,9 N to 5,9 N. The centre of the receptacle is defined by the right side position of dimension *H*. The measurement is performed using a single pin gauge.

Table 22 – Mechanical stop feature grade of the duplex active device receptacle interface for angled PC connector plug

Grade	Dimensions mm		Dimensions µm	Remarks
	OA minimum	*OA* maximum	*OD* clearance	
A	0,150	0,2	±15	a b
B	0,150	0,35	±40	a b
N	0,150	–		a b
X				b c

a The connector alignment feature is a rigid bore.

b Add the grade number to the alignment feature grade number.

c The connector alignment feature is a resilient sleeve.

Figure 11 is an example of a duplex active device receptacle interface for PC connector plug. Table 23 gives dimensions of the duplex active device receptacle interface for PC connector plug.

Table 24 and Table 25 give alignment feature grade and mechanical stop feature grade for the duplex active device receptacle interface for PC connector plug.

IECNORM.COM : Click to view the full PDF of IEC 61754-4:2022 RLV

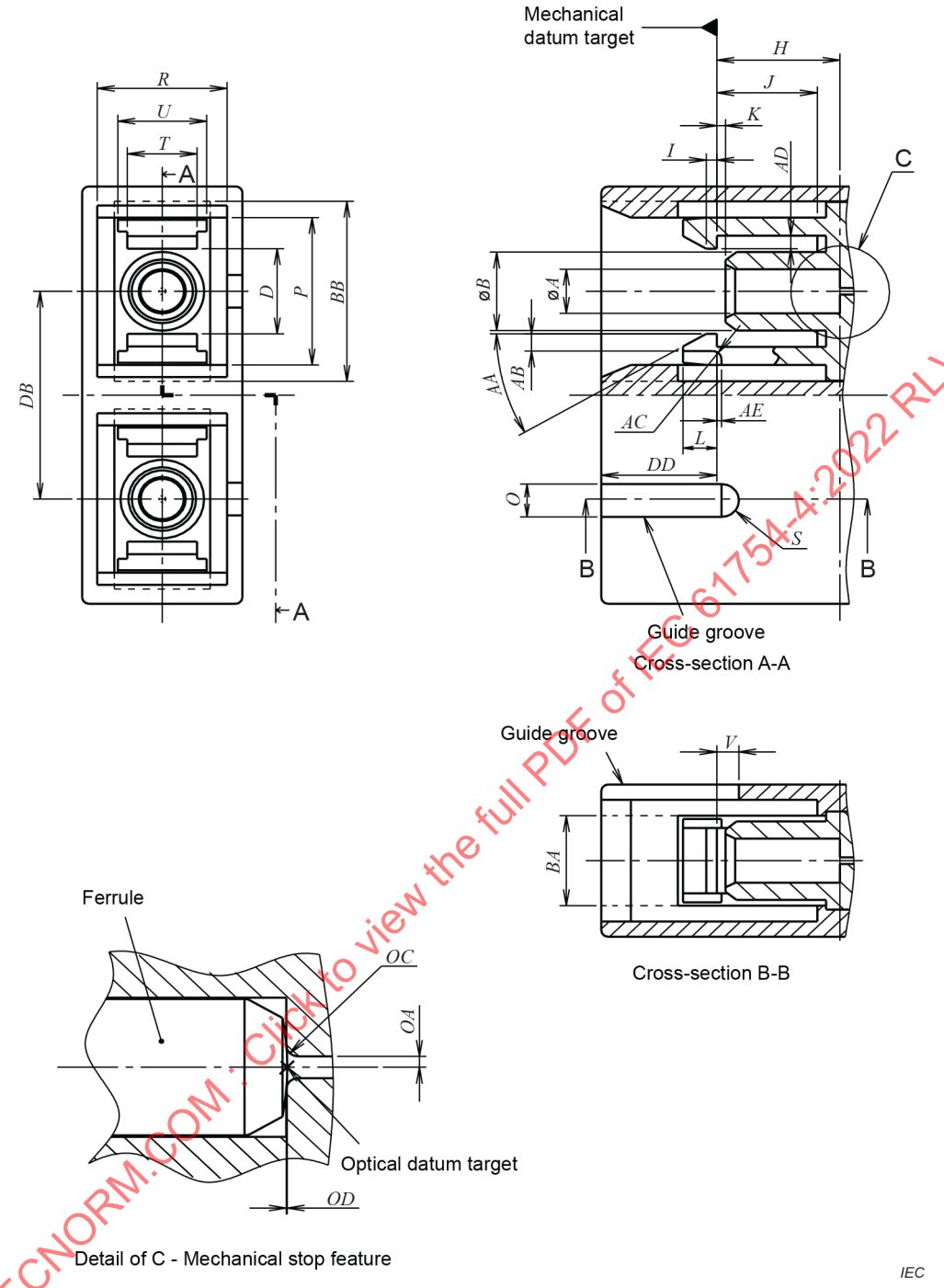

Figure 11 – Duplex active device receptacle interface for PC connector plug

IECNORM.COM : Click to view the full PDF of IEC 61754-4:2022 RLV

Table 23 – Dimensions of the duplex active device receptacle interface for PC connector plug

Reference	Dimensions		Remarks
	Minimum	Maximum	
A	See Table 24		
B	4,39 mm	4,69 mm	
D	4,9 mm	5,5 mm	
H	6,9 mm	7,1 mm	[a]
I	0,4 mm	0,8 mm	
J	5,51 mm	5,90 mm	
K	0,06 mm	1,00 mm	
L	1,9 mm	2,1 mm	
O	2,0 mm	2,2 mm	
P	9,0 mm	9,1 mm	
R	7,4 mm	7,5 mm	
S	1,0 mm	1,1 mm	Radius
T	3,80 mm	4,04 mm	
U	5,0 mm	5,3 mm	
V	0,6 mm	1,6 mm	
AA	27°	33°	Angle, unit in degrees
AB	0,8 mm	1,0 mm	
AC	0,4 mm	0,6 mm	Radius
AD	0,7 mm	0,8 mm	
AE	0,4 mm	0,6 mm	
BA	5,4 mm	5,6 mm	[b]
BB	11,0 mm	11,2 mm	[b]
DB	12,65 mm	12,75 mm	
DD	–	6,99 mm	
OA	See Table 25		Radius [a]
OC	0 mm	0,05 mm	Radius
OD	See Table 25		[a]

[a] An example of a mechanical stop feature is shown in Figure 11. ~~A mechanical stop feature is required in Table 3 within the clearances specified in Table 24 depending upon the application.~~ A mechanical stop is required to position the fibre ferrule to maintain the optical datum target within the active device receptacle and to avoid damaging the component within the receptacle.

[b] ~~This may be a structure as shown by a dashed line in Figure 11.~~ The dotted line structure in Figure 11 is a groove-shape preventing interference when the latch is deformed. It is optional.

IECNORM.COM : Click to view the full PDF of IEC 61754-4:2022 RLV

Table 24 – Alignment feature grade of the duplex active device receptacle interface for PC connector plug

Grade	Dimensions mm		Remarks
	A		
	Minimum	Maximum	
1	2,500	2,502	a b
2	2,501	2,504	a b
3	2,501	2,510	a b
4	2,501	2,525	a b
5	–	–	Resilient sleeve b c

[a] The connector alignment feature is a rigid bore.

[b] Add the grade number to the interface reference number.

[c] The connector alignment feature is a resilient sleeve. The feature accepts a pin gauge shown in Figure 3 to the centre of the receptacle with a force of 2 N to 5,9 N. The centre of the receptacle is defined by the right side position of dimension *H*.

Table 25 – Mechanical stop feature grade of the duplex active device receptacle interface for PC connector plug

Grade	Dimensions mm		Dimensions µm	Notes
	OA minimum	*OA* maximum	*OD* clearance	
A	0,150	0,2	±5	a b
B	0,150	0,35	±10	a b
N	0,150	1,250		a b
X				b c

[a] The connector alignment feature is a rigid bore.

[b] Add the grade number to the alignment feature grade number.

[c] The connector alignment feature is a resilient sleeve.

Panel dimensions are described in Annex A.

IECNORM.COM : Click to view the full PDF of IEC 61754-4:2022 RLV

Annex A
(informative)

Panel dimensions

A.1 General

When the IEC 61300-2-55 strength of mounted adaptor test is required in the relevant specifications, the test should be performed with a panel having the relevant cut out as shown in Clause A.2 and Clause A.3.

A.2 Simplex adaptor

Figure A.1 and Table A.1 show a recommended panel cut out and the dimensions for simplex adaptor, respectively.

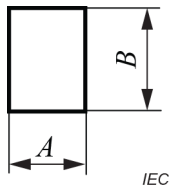

Figure A.1 – Panel cut out

Table A.1 – Dimensions for simplex adaptor

Reference	Dimensions mm		Remarks
	Minimum	Maximum	
A	9,9	10,0	
B	13,5	13,6	
The maximum thickness of the panel should be 1,6 mm. See IEC 60874-14-3.			

A.3 Duplex adaptor

Figure A.2 and Table A.2 show a recommended fixture cut out and the dimensions for duplex adaptor, respectively.

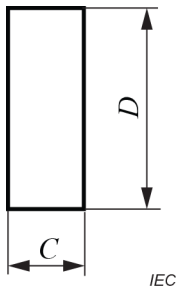

Figure A.2 – Fixture cut out

IECNORM.COM : Click to view the full PDF of IEC 61754-4:2022 RLV

Table A.2 – Dimensions for duplex adaptor

Reference	Dimensions mm		Remarks
	Minimum	Maximum	
C	9,9	10,0	
D	26,3	26,4	
The maximum thickness of the panel should be 1,6 mm. See IEC 60874-19-2.			

IECNORM.COM : Click to view the full PDF of IEC 61754-4:2022 RLV

Bibliography

IEC 60874-14-3, *Connectors for optical fibres and cables – Part 14-3: Detail specification for fibre optic adaptor (simplex) type SC for single-mode fibre*

IEC 60874-19-2, *Connectors for optical fibres and cables – Part 19-2: Fibre optic adaptor (duplex) type SC for single-mode fibre connectors – Detail specification*

IEC 61300-2-55, *Fibre optic interconnecting devices and passive components – Basic test and measurement procedures – Part 2-55: Tests – Strength of mounted adaptor*

IEC 61755-3-1, *Fibre optic connector optical interfaces – Part 3-1: Optical interface, 2,5 mm and 1,25 mm diameter cylindrical full zirconia PC ferrule, single mode fibre*

IEC 61755-3-2, *Fibre optic connector optical interfaces – Part 3-2: Optical interface, 2,5 mm and 1,25 mm diameter cylindrical full zirconia ferrules for 8 degrees angled-PC single mode fibres*

IEC 61755-6-1, *Fibre optic interconnecting devices and passive components – Fibre optic connector optical interfaces – Part 6-1: Optical interfaces for 50 um multimode fibres – General and guidance* [2]

IECNORM.COM : Click to view the full PDF of IEC 61754-4:2022 RLV

2 Under ~~consideration~~ preparation. Stage at the time of preparation: IEC/CDM 61755-6-1:2021.

IECNORM.COM : Click to view the full PDF of IEC 61754-4:2022 RLV

IEC 61754-4

Edition 3.0 2022-02

INTERNATIONAL STANDARD

NORME INTERNATIONALE

Fibre optic interconnecting devices and passive components – Fibre optic connector interfaces – Part 4: Type SC connector family

Dispositifs d'interconnexion et composants passifs fibroniques – Interfaces de connecteurs fibroniques – Partie 4: Famille de connecteurs de type SC

IECNORM.COM : Click to view the full PDF of IEC 61754-4:2022 RLV

IEC 61754-4:2022-02(en-fr)

CONTENTS

FOREWORD 4
1 Scope 6
2 Normative references 6
3 Terms and definitions 6
4 Description 6
5 Interfaces 7
Annex A (informative) Panel dimensions 35
A.1 General 35
A.2 Simplex adaptor 35
A.3 Duplex adaptor 35
Bibliography 37

Figure 1 – Simplex PC plug connector interface 8
Figure 2 – Simplex adaptor connector interface 11
Figure 3 – Pin gauge for adaptor 12
Figure 4 – Duplex PC plug connector interface 13
Figure 5 – Duplex adaptor connector interface 16
Figure 6 – Simplex angled PC plug connector interface 18
Figure 7 – Duplex angled PC plug connector interface 20
Figure 8 – Simplex active device receptacle interface for angled PC connector plug 23
Figure 9 – Simplex active device receptacle interface for PC connector plug 26
Figure 10 – Duplex active device receptacle interface for angled PC connector plug 29
Figure 11 – Duplex active device receptacle interface for PC connector plug 32
Figure A.1 – Panel cut out 35
Figure A.2 – Fixture cut out 35

Table 1 – Interfaces 7
Table 2 – Intermateability of interfaces 7
Table 3 – Dimensions of the simplex PC plug connector interface 9
Table 4 – Grade characteristics for simplex PC plug connector 10
Table 5 – Dimensions of the simplex adaptor connector interface 11
Table 6 – Grade characteristics for simplex adaptor connector 12
Table 7 – Pin gauge dimensions 12
Table 8 – Dimensions of the duplex PC plug connector interface 14
Table 9 – Grade characteristics for duplex PC plug connector 15
Table 10 – Dimensions of the duplex adaptor connector interface 17
Table 11 – Grade of the duplex adaptor connector 17
Table 12 – Dimensions of the simplex angled PC plug connector interfaces 19
Table 13 – Dimensions of the duplex angled PC plug connector interfaces 21
Table 14 – Dimensions of the simplex active device receptacle interface for angled PC connector plug 24

IECNORM.COM : Click to view the full PDF of IEC 61754-4:2022 RLV

Table 15 – Alignment feature grade of the simplex active device receptacle interface for angled PC connector plug 25
Table 16 – Mechanical stop feature grade of the simplex active device receptacle interface for angled PC connector plug 25
Table 17 – Dimensions of the simplex active device receptacle interface for PC connector plug 27
Table 18 – Alignment feature grade of the simplex active device receptacle interface for PC connector plug 28
Table 19 – Mechanical stop feature grade of the simplex active device receptacle interface for PC connector plug 28
Table 20 – Dimensions of the duplex active device receptacle interface for angled PC connector plug 30
Table 21 – Alignment feature grade of the duplex active device receptacle interface for angled PC connector plug 31
Table 22 – Mechanical stop feature grade of the duplex active device receptacle interface for angled PC connector plug 31
Table 23 – Dimensions of the duplex active device receptacle interface for PC connector plug 33
Table 24 – Alignment feature grade of the duplex active device receptacle interface for PC connector plug 34
Table 25 – Mechanical stop feature grade of the duplex active device receptacle interface for PC connector plug 34
Table A.1 – Dimensions for simplex adaptor 35
Table A.2 – Dimensions for duplex adaptor 36

IECNORM.COM : Click to view the full PDF of IEC 61754-4:2022 RLV

INTERNATIONAL ELECTROTECHNICAL COMMISSION

FIBRE OPTIC INTERCONNECTING DEVICES AND PASSIVE COMPONENTS – FIBRE OPTIC CONNECTOR INTERFACES –

Part 4: Type SC connector family

FOREWORD

1) The International Electrotechnical Commission (IEC) is a worldwide organization for standardization comprising all national electrotechnical committees (IEC National Committees). The object of IEC is to promote international co-operation on all questions concerning standardization in the electrical and electronic fields. To this end and in addition to other activities, IEC publishes International Standards, Technical Specifications, Technical Reports, Publicly Available Specifications (PAS) and Guides (hereafter referred to as "IEC Publication(s)"). Their preparation is entrusted to technical committees; any IEC National Committee interested in the subject dealt with may participate in this preparatory work. International, governmental and non-governmental organizations liaising with the IEC also participate in this preparation. IEC collaborates closely with the International Organization for Standardization (ISO) in accordance with conditions determined by agreement between the two organizations.
2) The formal decisions or agreements of IEC on technical matters express, as nearly as possible, an international consensus of opinion on the relevant subjects since each technical committee has representation from all interested IEC National Committees.
3) IEC Publications have the form of recommendations for international use and are accepted by IEC National Committees in that sense. While all reasonable efforts are made to ensure that the technical content of IEC Publications is accurate, IEC cannot be held responsible for the way in which they are used or for any misinterpretation by any end user.
4) In order to promote international uniformity, IEC National Committees undertake to apply IEC Publications transparently to the maximum extent possible in their national and regional publications. Any divergence between any IEC Publication and the corresponding national or regional publication shall be clearly indicated in the latter.
5) IEC itself does not provide any attestation of conformity. Independent certification bodies provide conformity assessment services and, in some areas, access to IEC marks of conformity. IEC is not responsible for any services carried out by independent certification bodies.
6) All users should ensure that they have the latest edition of this publication.
7) No liability shall attach to IEC or its directors, employees, servants or agents including individual experts and members of its technical committees and IEC National Committees for any personal injury, property damage or other damage of any nature whatsoever, whether direct or indirect, or for costs (including legal fees) and expenses arising out of the publication, use of, or reliance upon, this IEC Publication or any other IEC Publications.
8) Attention is drawn to the Normative references cited in this publication. Use of the referenced publications is indispensable for the correct application of this publication.
9) Attention is drawn to the possibility that some of the elements of this IEC Publication may be the subject of patent rights. IEC shall not be held responsible for identifying any or all such patent rights.

IEC 61754-4 has been prepared by subcommittee 86B: Fibre optic interconnecting devices and passive components, of IEC technical committee 86: Fibre optics. It is an International Standard.

This third edition cancels and replaces the second edition published in 2013 and constitutes a technical revision.

This edition includes the following significant technical changes with respect to the previous edition:

a) the test method IEC 61300-3-22 for the compression force of the ferrule was added;
b) Annex A (informative) with cut out dimension requirements for testing the strength of mounted adaptors was added.

IECNORM.COM : Click to view the full PDF of IEC 61754-4:2022 RLV

The text of this International Standard is based on the following documents:

Draft	Report on voting
86B/4563/FDIS	86B/4584/RVD

Full information on the voting for its approval can be found in the report on voting indicated in the above table.

The language used for the development of this International Standard is English.

This document was drafted in accordance with ISO/IEC Directives, Part 2, and developed in accordance with ISO/IEC Directives, Part 1 and ISO/IEC Directives, IEC Supplement, available at www.iec.ch/members_experts/refdocs. The main document types developed by IEC are described in greater detail at www.iec.ch/standardsdev/publications.

A list of all parts of the IEC 61754 series, under the general title *Fibre optic interconnecting devices and passive components – Fibre optic connector interfaces*, can be found on the IEC website.

Future standards in this series will carry the new general title as cited above. Titles of existing standards in this series will be updated at the time of the next edition.

The committee has decided that the contents of this document will remain unchanged until the stability date indicated on the IEC website under webstore.iec.ch in the data related to the specific document. At this date, the document will be

- reconfirmed,
- withdrawn,
- replaced by a revised edition, or
- amended.

IECNORM.COM : Click to view the full PDF of IEC 61754-4:2022 RLV

FIBRE OPTIC INTERCONNECTING DEVICES AND PASSIVE COMPONENTS – FIBRE OPTIC CONNECTOR INTERFACES –

Part 4: Type SC connector family

1 Scope

This part of IEC 61754 specifies the standard interface dimensions for type SC family of connectors.

2 Normative references

The following documents are referred to in the text in such a way that some or all of their content constitutes requirements of this document. For dated references, only the edition cited applies. For undated references, the latest edition of the referenced document (including any amendments) applies.

IEC 61300-3-22, *Fibre optic interconnecting devices and passive components – Basic test and measurement procedures – Part 3-22: Examinations and measurements – Ferrule compression force*

IEC 61754-1, *Fibre optic interconnecting devices and passive components – Fibre optic connector interfaces – Part 1: General and guidance*

3 Terms and definitions

For the purposes of this document, the terms and definitions given in IEC 61754-1 apply.

ISO and IEC maintain terminological databases for use in standardization at the following addresses:

- IEC Electropedia: available at http://www.electropedia.org/
- ISO Online browsing platform: available at http://www.iso.org/obp

4 Description

The parent connector for the type SC connector family is a single position plug connector characterized by a 2,5 mm nominal ferrule diameter. It includes a push-pull coupling mechanism which is spring loaded relative to the ferrule in the direction of the optical axis. The plug has a single male key which may be used to orient and limit the relative position between the connector and the component to which it is mated. The optical alignment mechanism of the connector is of a sleeve style.

This document defines the standard interface dimensions of active device receptacles for the type SC connectors. The receptacles are used to retain the connector plug and mechanically maintain the optical datum target of the plugs at a defined position within the receptacle housings.

IECNORM.COM : Click to view the full PDF of IEC 61754-4:2022 RLV

5 Interfaces

This document contains the standard interfaces showed in Table 1.

Table 1 – Interfaces

Interface IEC 61754-4-1	Simplex plug connector interface – push/pull, physical contact (PC)
Interface IEC 61754-4-2	Simplex adaptor connector interface – push/pull
Interface IEC 61754-4-3	Duplex plug connector interface – push/pull, PC
Interface IEC 61754-4-4	Duplex adaptor connector interface – push/pull
Interface IEC 61754-4-5	Simplex plug connector interface – push/pull, angled PC (APC) 8°
Interface IEC 61754-4-6	Duplex plug connector interface – push/pull, APC 8°
Interface IEC 61754-4-X1	Simplex active device receptacle interface – for APC 8°connector plug
Interface IEC 61754-4-X2	Simplex active device receptacle interface – for PC connector plug
Interface IEC 61754-4-X3	Duplex active device receptacle interface – for APC 8°connector plug
Interface IEC 61754-4-X4	Duplex active device receptacle interface – for PC connector plug

Table 2 shows the intermateability of interfaces.

Table 2 – Intermateability of interfaces

Plugs	Adaptors/active device receptacles					
	61754-4-2	61754-4-4	61754-4-X1	61754-4-X2	61754-4-X3	61754-4-X4
61754-4-1	Mate	Mate	Not mate	Mate	Not mate	Mate
61754-4-3	Not mate	Mate	Not mate	Not mate	Not mate	Mate
61754-4-5	Mate	Mate	Mate	Not mate	Mate	Not mate
61754-4-6	Not mate	Mate	Not mate	Not mate	Mate	Not mate

Figure 1 is an example of a simplex PC plug connector interface. Table 3 gives dimensions of the simplex PC plug connector interface and Table 4 gives the grade characteristics for simplex PC plug connector interface.

A chamfer or radius is allowed to a maximum depth of 1,8 mm from the ferrule endface.

IECNORM.COM : Click to view the full PDF of IEC 61754-4:2022 RLV

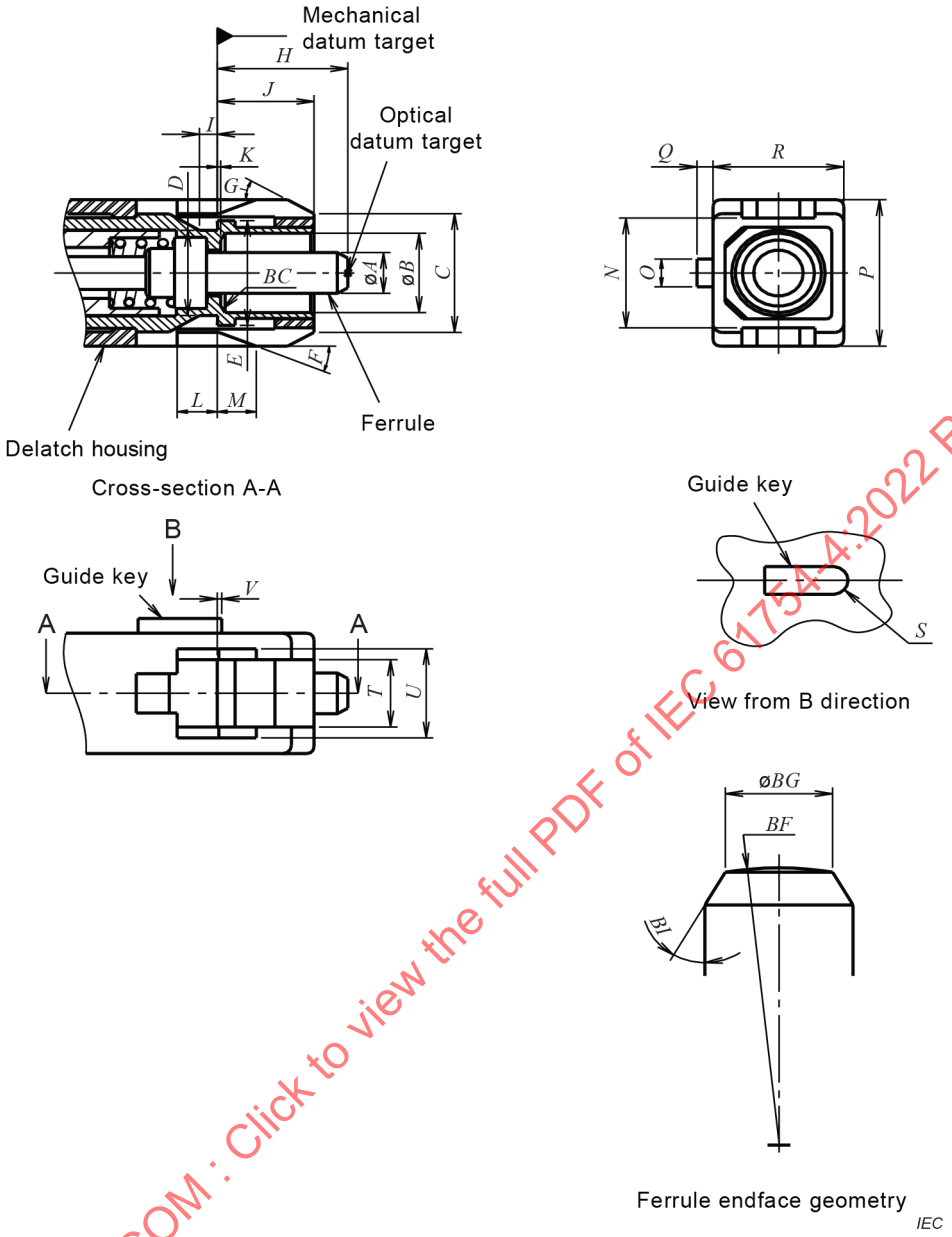

Figure 1 – Simplex PC plug connector interface

IECNORM.COM : Click to view the full PDF of IEC 61754-4:2022 RLV

Table 3 – Dimensions of the simplex PC plug connector interface

Reference	Dimensions		Remarks
	Minimum	Maximum	
A	See Table 4		
B	4,8 mm	4,9 mm	
C	6,8 mm	7,4 mm	
D	4,9 mm	5,3 mm	
E	6,7 mm	6,8 mm	
F	19°	23°	Angle, unit in degrees
G	25°	35°	Angle, unit in degrees
H	7,15 mm	7,5 mm	[a]
I	0,8 mm	1,2 mm	
J	5,3 mm	5,5 mm	
K	–	0,05 mm	
L	2,11 mm	–	[b]
M	2,0 mm	2,8 mm	[b c]
N	6,6 mm	6,8 mm	
O	1,6 mm	1,8 mm	
P	8,89 mm	8,99 mm	
Q	0,8 mm	1,0 mm	
R	7,29 mm	7,39 mm	
S	0,8 mm	0,90 mm	Radius
T	4,05 mm	4,15 mm	
U	5,4 mm	5,6 mm	
V	0 mm	0,5 mm	[b]
BC	0 mm	0,5 mm	Chamfer or round
BF	See IEC 61755-3-1		Radius [d]
BG	See IEC 61755-3-1		Diameter
BI	25°	35°	Angle, unit in degrees

[a] Dimension *H* is given for plug endface when not mated. The ferrule is movable by a certain axial compression force, with direct contacting endfaces, and therefore dimension *H* is variable. Ferrule compression force shall be 7,8 N to 11,8 N when dimension *H* is 7,0 mm ± 0,1 mm. The compression force shall be measured according to IEC 61300-3-22.

[b] The delatch housing shall be movable to the right or left. Dimensions *L*, *M* and *V* are given when the delatch housing is at the furthest right. Dimension *M* shall be negative, when the delatch housing is at the furthest left.

[c] The right end of *M* shall be at the left of the mechanical datum target when the delatch housing is at the furthest left.

[d] Dome eccentricity of the spherical polished endface shall be less than 50 µm.

IECNORM.COM : Click to view the full PDF of IEC 61754-4:2022 RLV

Table 4 – Grade characteristics for simplex PC plug connector

Grade	Dimensions mm		Remarks
	A		
	Minimum	Maximum	
A	See IEC 61755-3-1		[a]
B	See IEC 61755-3-1		[a]
C	See IEC 61755-3-1		[a]
D	See IEC 61755-3-1		[a]
A_m	Grade not specified at this time		[a] [b]
B_m	2,497	2,500	[a] [b]
C_m	2,494	2,500	[a] [b]

[a] Add the grade number to the interface reference number.

[b] Refer to future IEC 61755-6-1 for guidance[1].

Figure 2 is an example of a simplex adaptor connector interface. Table 5 gives dimensions of the simplex adaptor connector interface and Table 6 gives the grade of the simplex adaptor connector interface.

IECNORM.COM : Click to view the full PDF of IEC 61754-4:2022 RLV

[1] Under preparation. Stage at the time of publication: IEC/CDM 61755-6-1:2021.

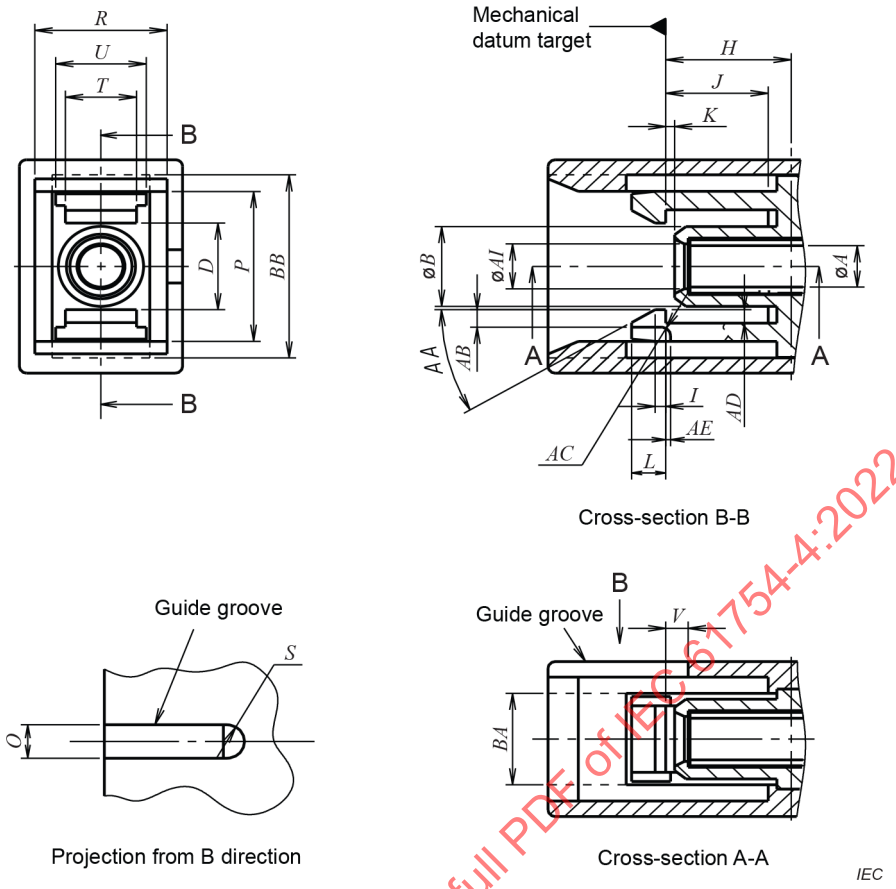

Figure 2 – Simplex adaptor connector interface

Table 5 – Dimensions of the simplex adaptor connector interface

Reference	Dimensions		Remarks
	Minimum	Maximum	
A	See Table 6		
B	4,39 mm	4,79 mm	
D	4,9 mm	5,5 mm	
H	6,9 mm	7,1 mm	
I	0,4 mm	0,8 mm	
J	5,51 mm	5,90 mm	
K	0,06 mm	1,00 mm	
L	1,9 mm	2,1 mm	
O	2,0 mm	2,2 mm	
P	9,0 mm	9,1 mm	
R	7,4 mm	7,5 mm	
S	1,0 mm	1,1 mm	Radius
T	3,80 mm	4,04 mm	
U	5,0 mm	5,3 mm	
V	0,6 mm	1,6 mm	
AA	27°	33°	Angle, unit in degrees
AB	0,8 mm	1,0 mm	
AC	0,4 mm	0,6 mm	Radius

IECNORM.COM : Click to view the full PDF of IEC 61754-4:2022 RLV

Reference	Dimensions		Remarks
	Minimum	Maximum	
AD	0,7 mm	0,8 mm	
AE	0,4 mm	0,6 mm	
AI	2,7 mm	2,8 mm	
BA	5,4 mm	5,6 mm	[a]
BB	10,8 mm	11,2 mm	[a]

[a] The dotted line structure in Figure 2 is a groove-shape preventing interference when the latch is deformed. It is optional.

Table 6 – Grade characteristics for simplex adaptor connector

Grade	Dimensions mm		Remarks
	A		
	Minimum	Maximum	
[a]			Resilient sleeve [a b]

[a] Add the grade number to the interface reference number.

[b] The connector alignment feature is a resilient sleeve. The feature shall accept a pin gauge shown in Figure 3 to the centre of the adaptor with a force of 2 N to 5,9 N under the condition that another pin gauge is inserted into the feature from the other side. The centre of the adaptor is defined by the right side position of dimension *H*.

Figure 3 is an example of a pin gauge for adaptor. Table 7 gives pin gauge dimensions.

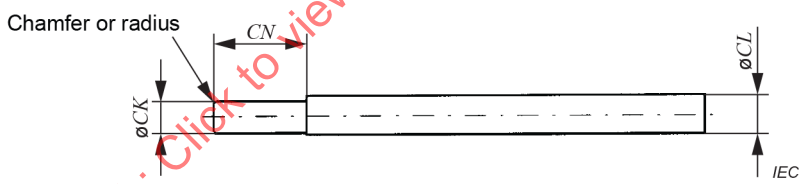

Figure 3 – Pin gauge for adaptor

Table 7 – Pin gauge dimensions

Reference	Dimensions mm		Remarks
	Minimum	Maximum	
CK	2,498 5	2,499 5	Surface roughness: grade N4 (0,2 µm radius)
CL	2,8	4,8	
CN	7		

Figure 4 is an example of a duplex PC plug connector interface. Table 8 gives dimensions of the duplex PC plug connector interface and Table 9 gives the grade of the duplex PC plug connector interface.

A chamfer or radius is allowed to a maximum depth of 1,8 mm from the ferrule endface.

IECNORM.COM : Click to view the full PDF of IEC 61754-4:2022 RLV

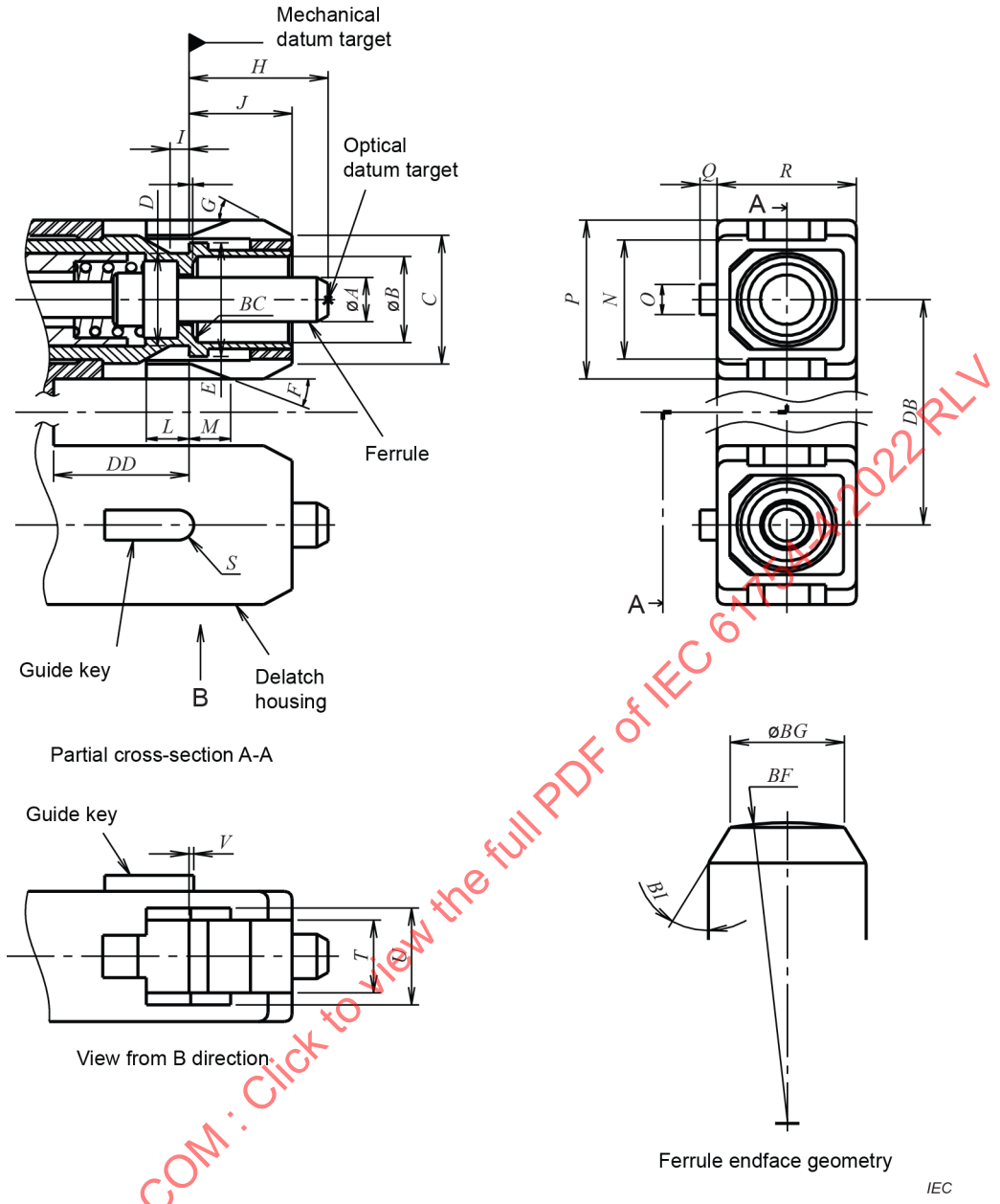

Figure 4 – Duplex PC plug connector interface

IECNORM.COM : Click to view the full PDF of IEC 61754-4:2022 RLV

Table 8 – Dimensions of the duplex PC plug connector interface

Reference	Dimensions		Remarks
	Minimum	Maximum	
A	See Table 9		
B	4,8 mm	4,9 mm	
C	6,8 mm	7,4 mm	
D	4,9 mm	5,3 mm	
E	6,7 mm	6,8 mm	
F	19°	23°	Angle, unit in degrees
G	25°	35°	Angle, unit in degrees
H	7,15 mm	7,5 mm	[a]
I	0,8 mm	1,2 mm	
J	5,3 mm	5,5 mm	
K	–	0,05 mm	
L	2,11 mm	–	[b]
M	2,0 mm	2,8 mm	[b] [c]
N	6,6 mm	6,8 mm	
O	1,6 mm	1,8 mm	
P	8,79 mm	8,89 mm	[d]
Q	0,8 mm	1,0 mm	
R	7,29 mm	7,39 mm	
S	0,8 mm	0,9 mm	Radius
T	4,05 mm	4,15 mm	
U	5,4 mm	5,6 mm	
V	0 mm	0,5 mm	[b]
BC	0 mm	0,5 mm	Chamfer or round
BF	See IEC 61755-3-1		Radius [f]
BG	See IEC 61755-3-1		Diameter
BI	25°	35°	Angle, unit in degrees
DB	12,65 mm	12,75 mm	[e]
DD	7 mm	35 mm	

[a] Dimension *H* is given for plug endface when not mated. The ferrule is movable by a certain axial compression force, with direct contacting endfaces, and therefore dimension *H* is variable. Ferrule compression force shall be 7,8 N to 11,8 N when dimension *H* is 7,0 mm ± 0,1 mm. The compression force shall be measured according to IEC 61300-3-22.

[b] The delatch housing shall be movable to the right or left. Dimensions *L*, *M* and *V* are given when the delatch housing is at the furthest right.

[c] The right end of *M* shall be at the left of the mechanical datum target when the delatch housing is at the furthest left.

[d] The delatch housing may be a rigid sleeve. When two simplex plugs are retained together by a flexible sleeve, dimension *P* shall be from 8,89 mm to 8,99 mm.

[e] The delatch housing may be a rigid sleeve. When two simplex plugs are retained together by a flexible sleeve, dimension *DB* shall be from 12,25 mm to 13,15 mm.

[f] The dome eccentricity of the spherical polished endface shall be less than 50 µm.

IECNORM.COM : Click to view the full PDF of IEC 61754-4:2022 RLV

Table 9 – Grade characteristics for duplex PC plug connector

Grade	Dimensions mm		Remarks
	A		
	Minimum	Maximum	
A	See IEC 61755-3-1		[a]
B	See IEC 61755-3-1		[a]
C	See IEC 61755-3-1		[a]
D	See IEC 61755-3-1		[a]
A_m	Grade not specified at this time		[a] [b]
B_m	2,497	2,500	[a] [b]
C_m	2,494	2,500	[a] [b]

[a] Add the grade number to the interface reference number.

[b] Refer to future IEC 61755-6-1 for guidance.

Figure 5 is an example of a duplex adaptor connector interface. Table 10 gives dimensions of the duplex adaptor connector interface and Table 11 gives the grade of the duplex adaptor connector interface.

IECNORM.COM : Click to view the full PDF of IEC 61754-4:2022 RLV

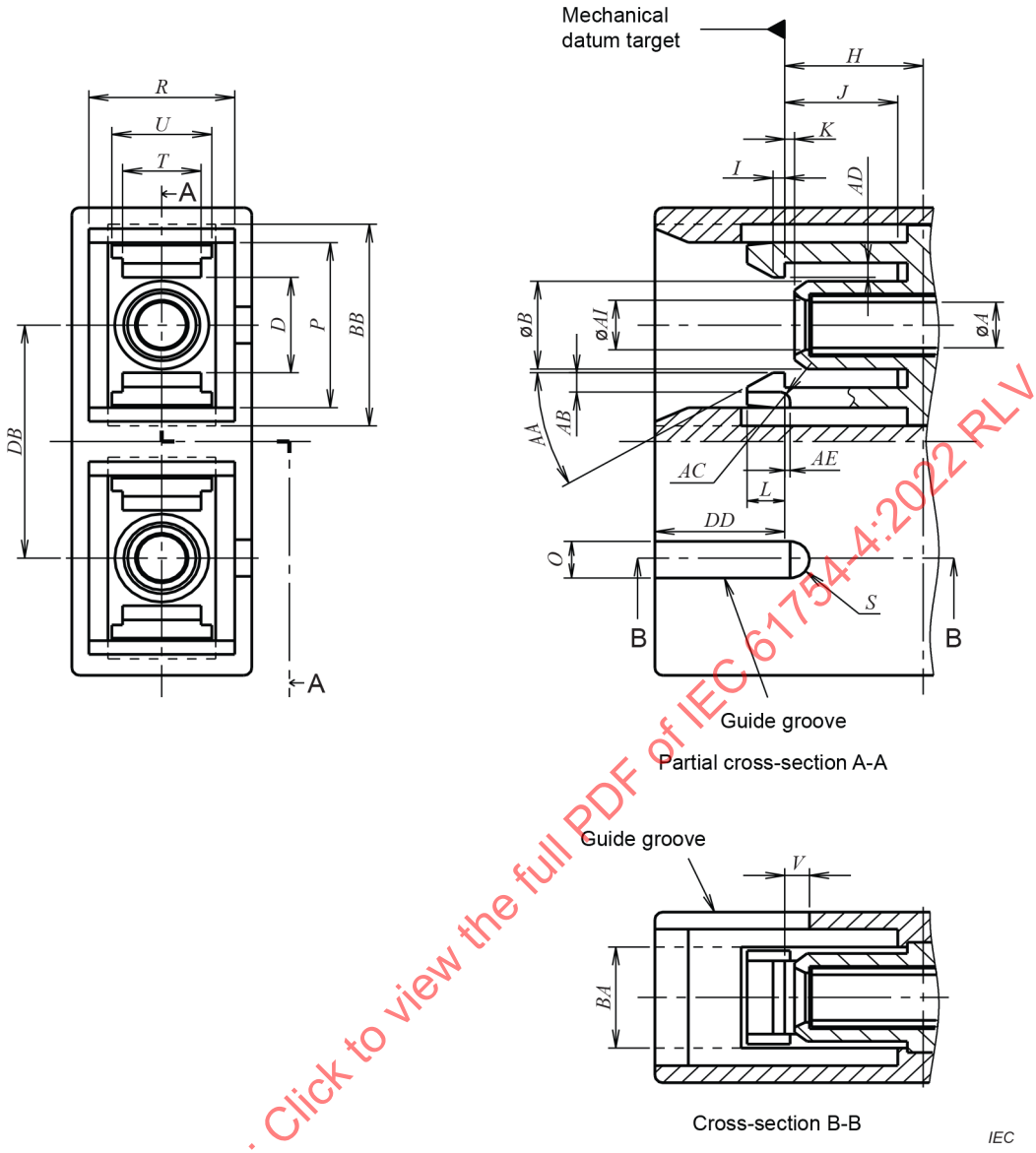

Figure 5 – Duplex adaptor connector interface

IECNORM.COM : Click to view the full PDF of IEC 61754-4:2022 RLV

Table 10 – Dimensions of the duplex adaptor connector interface

Reference	Dimensions mm		Remarks
	Minimum	Maximum	
A	See Table 11		
B	4,39 mm	4,69 mm	
D	4,9 mm	5,5 mm	
H	6,9 mm	7,1 mm	
I	0,4 mm	0,8 mm	
J	5,51 mm	5,90 mm	
K	0,06 mm	1,00 mm	
L	1,9 mm	2,1 mm	
O	2,0 mm	2,2 mm	
P	9,0 mm	9,1 mm	
R	7,4 mm	7,5 mm	
S	1,0 mm	1,1 mm	Radius
T	3,80 mm	4,04 mm	
U	5,0 mm	5,3 mm	
V	0,6 mm	1,6 mm	
AA	27°	33°	Angle, unit in degrees
AB	0,8 mm	1,0 mm	
AC	0,4 mm	0,6 mm	Radius
AD	0,7 mm	0,8 mm	
AE	0,4 mm	0,6 mm	
AI	2,7 mm	2,8 mm	
BA	5,4 mm	5,6 mm	[a]
BB	10,8 mm	11,2 mm	[a]
DB	12,65 mm	12,75 mm	
DD	–	6,99 mm	

[a] The dotted line structure in Figure 5 is a groove-shape preventing interference when the latch is deformed. It is optional.

Table 11 – Grade of the duplex adaptor connector

Grade	Dimensions mm		Remarks
	A		
	Minimum	Maximum	
[a]	–	–	Resilient sleeve [a b]

[a] Add grade number to the interface reference number.

[b] The connector alignment feature is a resilient sleeve. The feature shall accept a pin gauge shown in Figure 3 to the centre of the adaptor with a force of 2,0 N to 5,9 N under the condition that another pin gauge is inserted into the feature from the other side. The centre of the adaptor is defined by the right side position of dimension *H*.

IECNORM.COM : Click to view the full PDF of IEC 61754-4:2022 RLV

Figure 6 is an example of a simplex angled PC plug connector interface. Table 12 gives dimensions of the simplex angled PC plug connector interface. The detail dimensions of optical interfaces for APC are defined in IEC 61755-3-2.

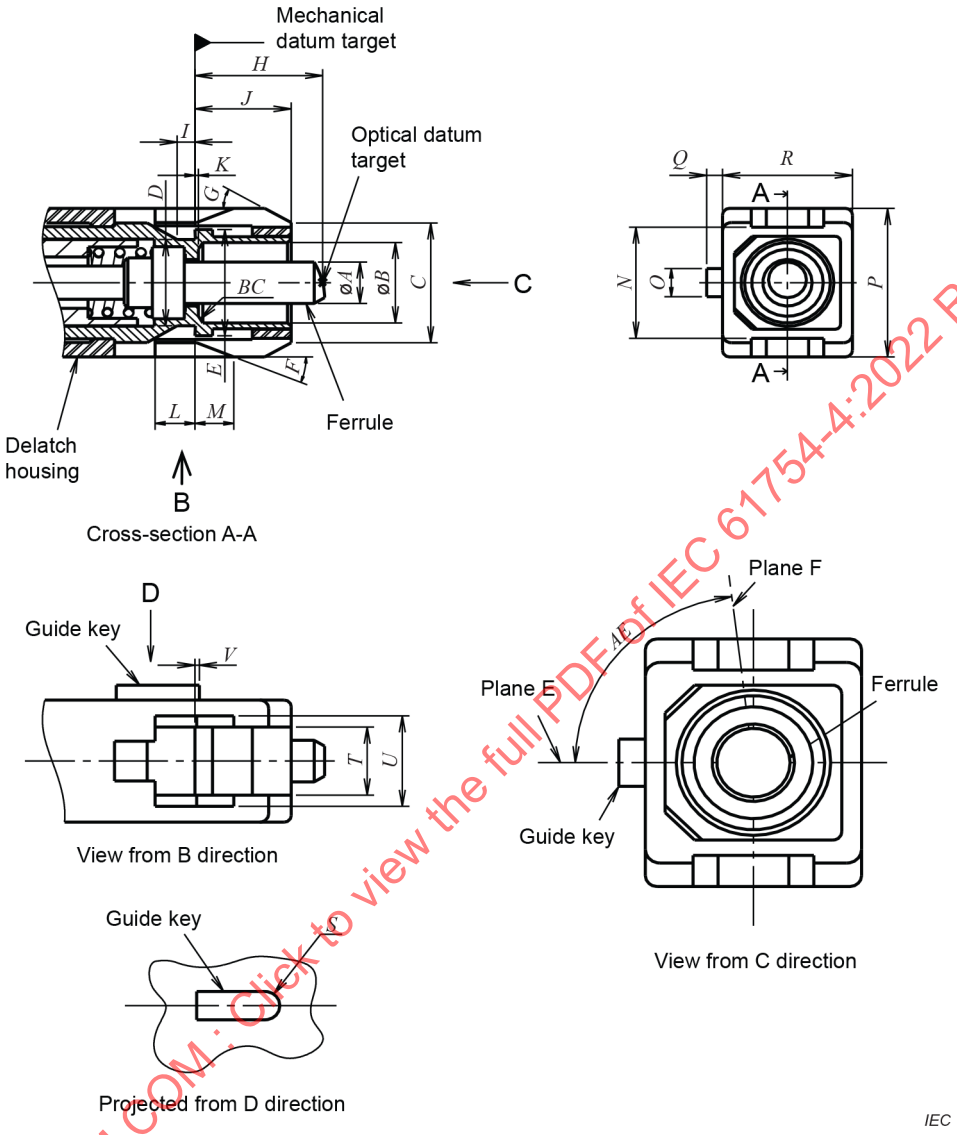

Figure 6 – Simplex angled PC plug connector interface *(1 of 2)*

IECNORM.COM : Click to view the full PDF of IEC 61754-4:2022 RLV

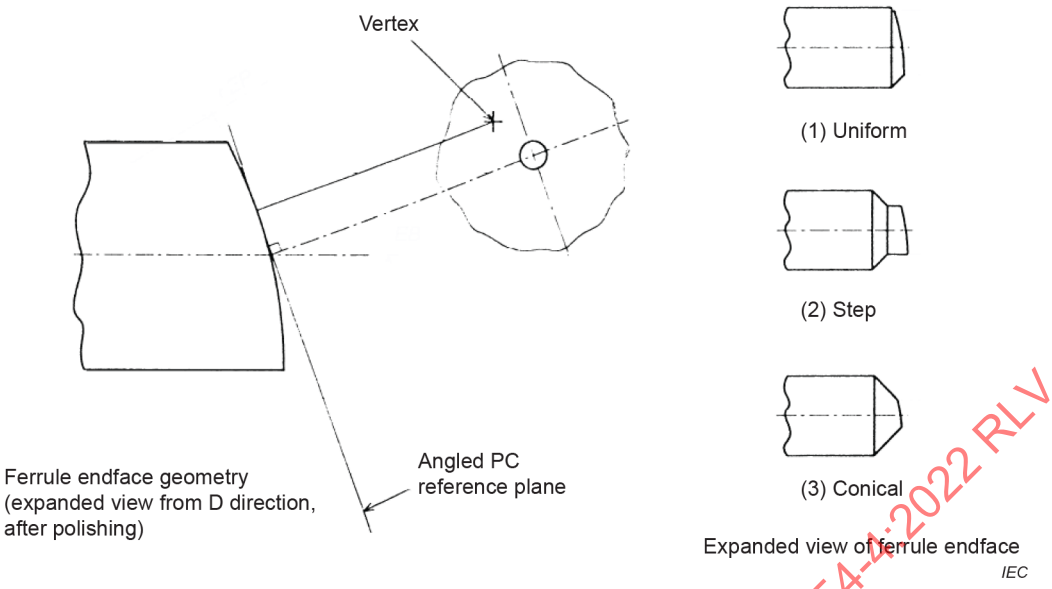

Figure 6 – Simplex angled PC plug connector interface *(2 of 2)*

Table 12 – Dimensions of the simplex angled PC plug connector interfaces

Reference	Dimensions		Remarks
	Minimum	Maximum	
A	See IEC 61755-3-2		a
B	4,8 mm	4,9 mm	
C	6,8 mm	7,4 mm	
D	4,9 mm	5,3 mm	
E	6,7 mm	6,8 mm	
F	19°	23°	Angle, unit in degrees
G	25°	35°	Angle, unit in degrees
H	7,15 mm	7,5 mm	b
I	0,8 mm	1,2 mm	
J	5,3 mm	5,5 mm	
K	–	0,05 mm	
L	2,11 mm	–	c
M	2,0 mm	2,8 mm	c d
N	6,6 mm	6,8 mm	
O	1,6 mm	1,8 mm	
P	8,89 mm	8,99 mm	
Q	0,8 mm	1,0 mm	
R	7,29 mm	7,39 mm	
S	0,8 mm	0,9 mm	Radius
T	4,05 mm	4,15 mm	
U	5,4 mm	5,6 mm	
V	0 mm	0,5 mm	c
BC	0 mm	0,5 mm	Chamfer or round
EA	–	–	e

IECNORM.COM : Click to view the full PDF of IEC 61754-4:2022 RLV

a	Add the grade number to the interface reference number.
b	Dimension H is given for plug endface when not mated. It is movable by a certain axial compression force, with direct contacting endfaces, and therefore dimension H is variable. Ferrule compression force shall be 7,8 N to 11,8 N when dimension H is 7,0 mm ± 0,1 mm. The compression force shall be measured according to IEC 61300-3-22.
c	The delatch housing shall be movable to the right or left. Dimensions L, M and V are given when the delatch housing is at the furthest right.
d	The right end of M shall be at the left of the mechanical datum target when the delatch housing is at the furthest left.
e	Dimension EA is defined as an angle between two planes: one plane, plane E, passes through the axis of the ferrule and axis of symmetry of the key of the angled endface connector plug. The other plane, plane F, passes through the axis of the ferrule and the normal to the angled PC reference plane. Dimension EA shall be 90° as a basic dimension.

Figure 7 is an example of a duplex angled PC plug connector interface. Table 13 gives dimensions of the duplex angled PC plug connector interface. The detail dimensions of optical interfaces for APC are defined in IEC 61755-3-2.

IECNORM.COM : Click to view the full PDF of IEC 61754-4:2022 RLV

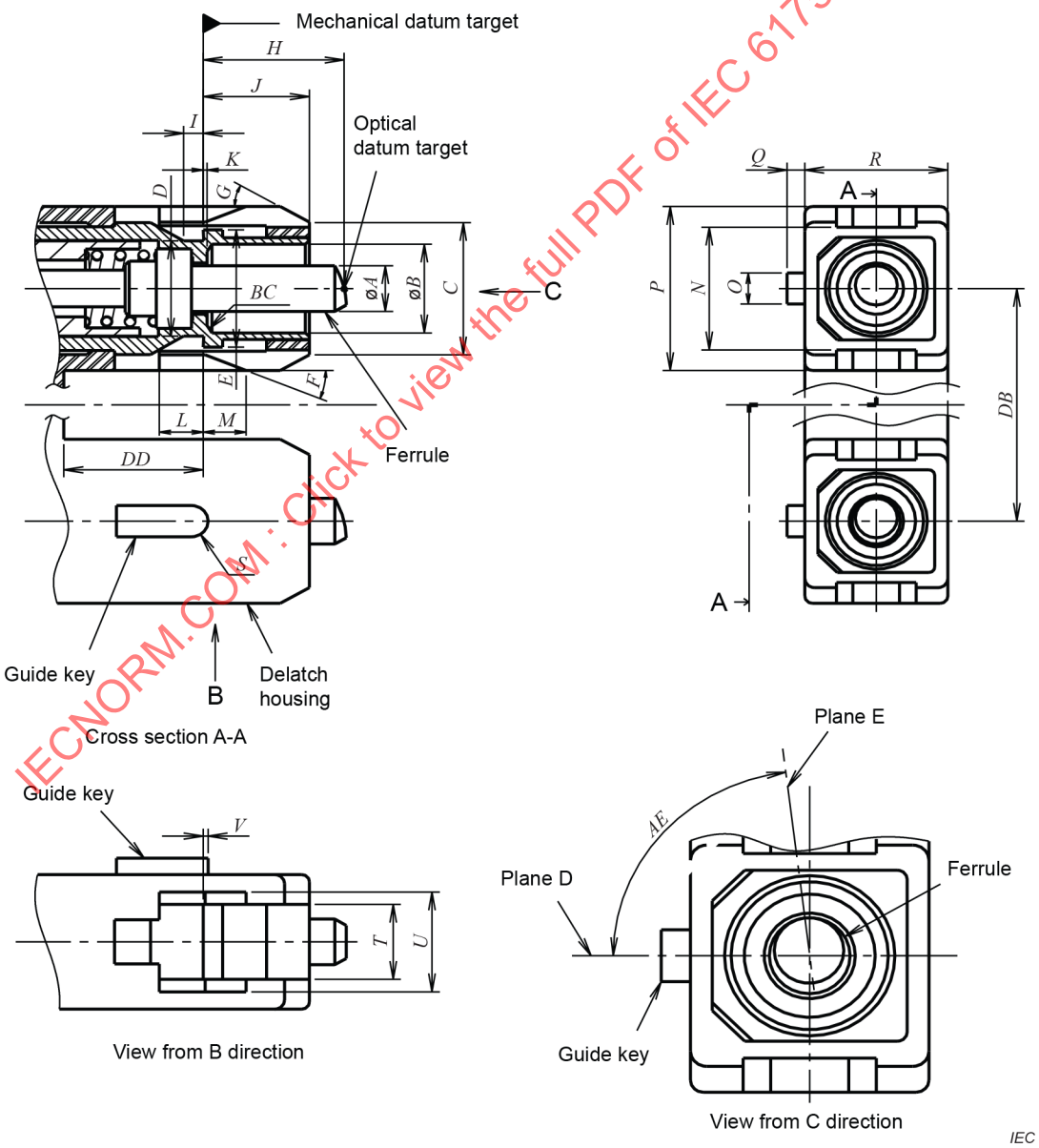

Figure 7 – Duplex angled PC plug connector interface *(1 of 2)*

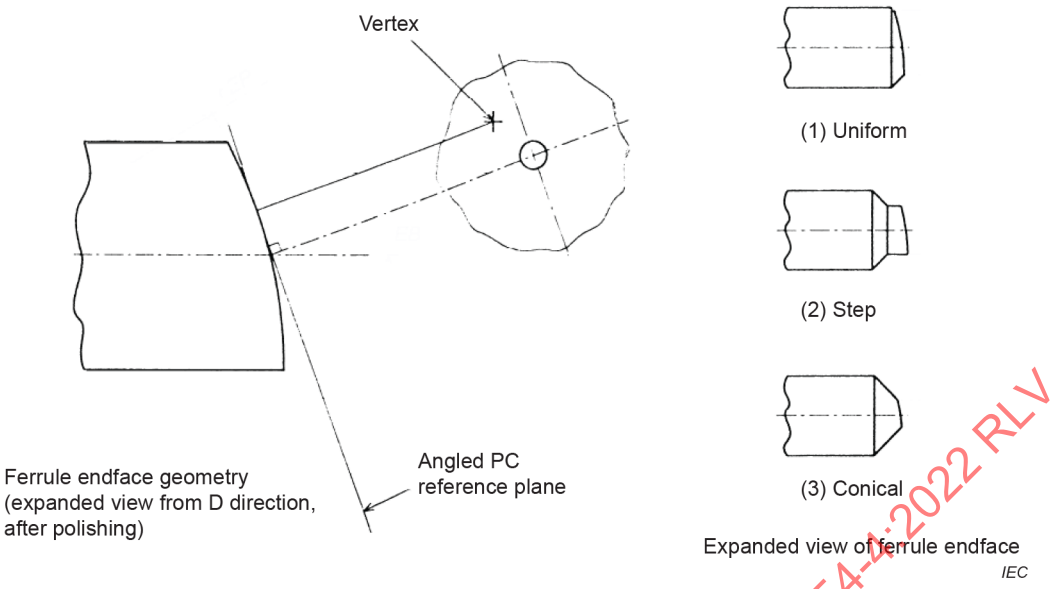

Figure 7 – Duplex angled PC plug connector interface *(2 of 2)*

Table 13 – Dimensions of the duplex angled PC plug connector interfaces

Reference	Dimensions		Remarks
	Minimum	Maximum	
A	See IEC 61755-3-2		a
B	4,8 mm	4,9 mm	
C	6,8 mm	7,4 mm	
D	4,9 mm	5,3 mm	
E	6,7 mm	6,8 mm	
F	19°	23°	Angle, unit in degrees
G	25°	35°	Angle, unit in degrees
H	7,15 mm	7,5 mm	b
I	0,8 mm	1,2 mm	
J	5,3 mm	5,5 mm	
K	–	0,05 mm	
L	2,11 mm	–	c
M	2 mm	2,8 mm	c d
N	6,6 mm	6,8 mm	
O	1,6 mm	1,8 mm	
P	8,79 mm	8,89 mm	e
Q	0,8 mm	1,0 mm	
R	7,29 mm	7,39 mm	
S	0,8 mm	0,9 mm	Radius
T	4,05 mm	4,15 mm	
U	5,4 mm	5,6 mm	
V	0 mm	0,5 mm	c
BC	0 mm	0,5 mm	Chamfer or round
DB			f
DD	7,0 mm		

IECNORM.COM : Click to view the full PDF of IEC 61754-4:2022 RLV

Reference	Dimensions		Remarks
	Minimum	Maximum	
EA	–	–	g

[a] Add the grade number to the interface reference number.

[b] Dimension *H* is given for plug endface when not mated. The ferrule is movable by a certain axial compression force, with direct contacting endfaces, and therefore dimension *H* is variable. Ferrule compression force shall be 7,8 N to 11,8 N when dimension *H* is 7,0 mm ± 0,1 mm. The compression force shall be measured according to IEC 61300-3-22.

[c] The delatch housing shall be movable to the right or left. Dimensions *L*, *M* and *V* are given when the delatch housing is at the furthest right.

[d] The right end of *M* shall be at the left of the mechanical datum target when the delatch housing is at the furthest left.

[e] The delatch housing may be rigid sleeve. When two simplex plugs are retained together by a flexible sleeve, dimension *P* shall be from 8,89 mm to 8,99 mm.

[f] When two simplex plugs are retained together by a flexible sleeve, dimension *DB* shall be from 12,25 mm to 13,15 mm.

[g] Dimension *EA* is defined as an angle between two planes: one plane, plane D, passes through the axis of the ferrule and axis of symmetry of the key of the angled endface connector plug. The other plane, plane E, passes through the axis of the ferrule and the normal to the angled PC reference plane. Dimension *EA* shall be 90° as a basic dimension.

Figure 8 is an example of a simplex active device receptacle interface for angled PC connector plug. Table 14 gives dimensions of the simplex active device receptacle interface for angled PC connector plug.

Table 15 and Table 16 give alignment feature grade and mechanical stop feature grade for the simplex active device receptacle interface for angled PC connector plug.

IECNORM.COM : Click to view the full PDF of IEC 61754-4:2022 RLV

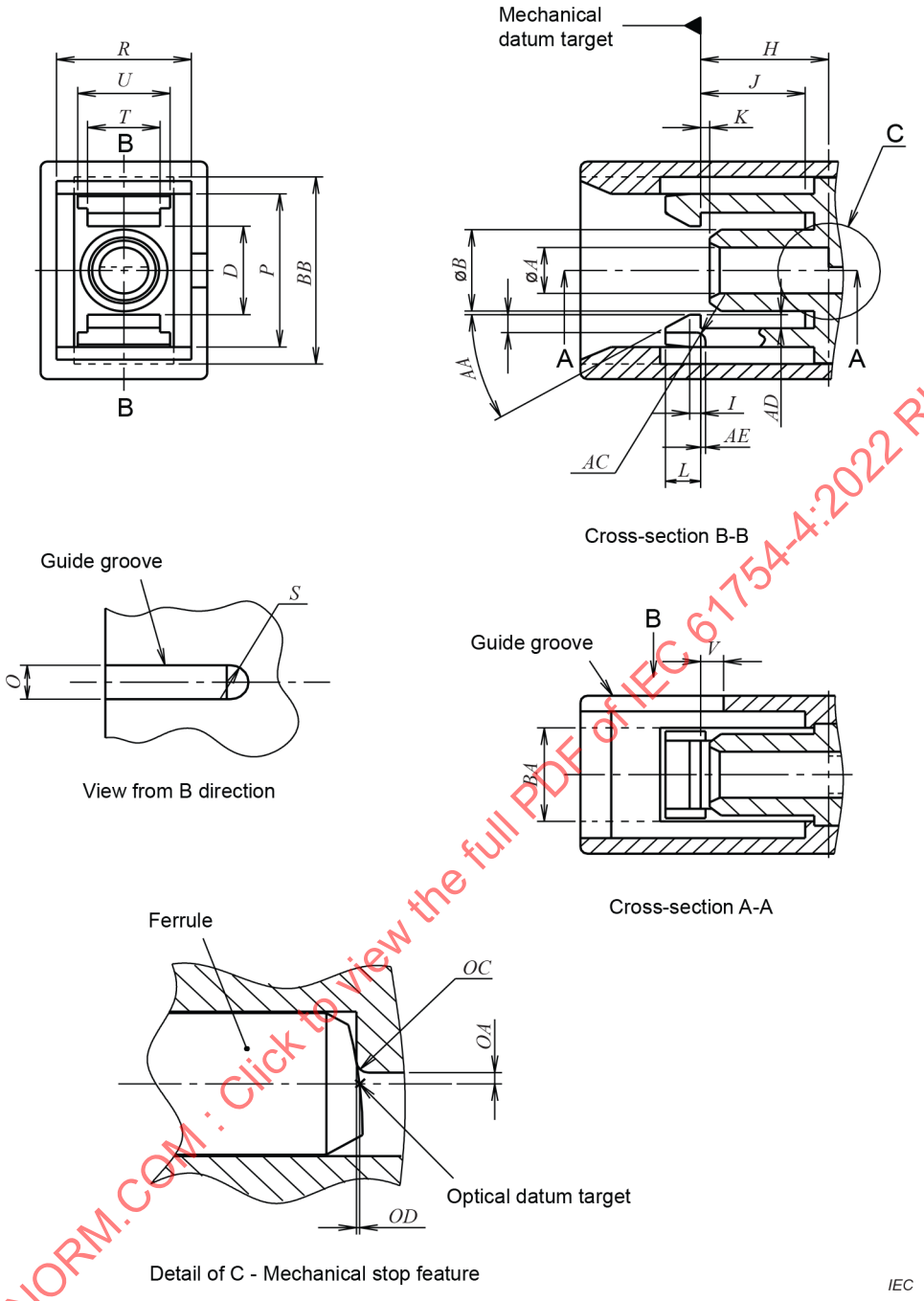

Figure 8 – Simplex active device receptacle interface for angled PC connector plug

IECNORM.COM : Click to view the full PDF of IEC 61754-4:2022 RLV

Table 14 – Dimensions of the simplex active device receptacle interface for angled PC connector plug

Reference	Dimensions		Remarks
	Minimum	Maximum	
A	See Table 15		
B	4,39 mm	4,79 mm	
D	4,9 mm	5,5 mm	
H	6,9 mm	7,1 mm	[a]
I	0,4 mm	0,8 mm	
J	5,51 mm	5,90 mm	
K	0,06 mm	1,00 mm	
L	1,9 mm	2,1 mm	
O	2,0 mm	2,2 mm	
P	9,0 mm	9,1 mm	
R	7,4 mm	7,5 mm	
S	1,0 mm	1,1 mm	Radius
T	3,80 mm	4,04 mm	
U	5,0 mm	5,3 mm	
V	0,6 mm	1,6 mm	
AA	27°	33°	Angle, unit in degrees
AB	0,8 mm	1,0 mm	
AC	0,4 mm	0,6 mm	Radius
AD	0,7 mm	0,8 mm	
AE	0,4 mm	0,6 mm	
BA	5,4 mm	5,6 mm	[b]
BB	11,0 mm	11,2 mm	[b]
OA	See Table 16		Radius [a]
OC	0 mm	0,05 mm	Radius
OD	See Table 16		[a]

[a] An example of a mechanical stop feature is shown in Figure 8. A mechanical stop is required to position the fibre ferrule to maintain the optical datum target within the active device receptacle and to avoid damaging the component within the receptacle.

[b] The dotted line structure in Figure 8 is a groove-shape preventing interference when the latch is deformed. It is optional.

IECNORM.COM : Click to view the full PDF of IEC 61754-4:2022 RLV

Table 15 – Alignment feature grade of the simplex active device receptacle interface for angled PC connector plug

Grade	Dimensions mm		Remarks
	A		
	Minimum	Maximum	
1	2,500	2,502	a b
2	2,501	2,504	a b
3	2,501	2,510	a b
4	2,501	2,525	a b
5	–	–	Resilient sleeve b c

a The connector alignment feature is a rigid bore.

b Add the grade number to the interface reference number.

c The connector alignment feature is a resilient sleeve. The feature accepts a pin gauge shown in Figure 3 to the centre of the receptacle with a force of 2,9 N to 5,9 N. The centre of the receptacle is defined by the right side position of dimension *H*. The measurement is performed using a single pin gauge.

Table 16 – Mechanical stop feature grade of the simplex active device receptacle interface for angled PC connector plug

Grade	Dimensions mm		Dimensions µm	Remarks
	OA minimum	*OA* maximum	*OD* clearance	
A	0,150	0,2	±15	a b
B	0,150	0,35	±40	a b
N	0,150	–		a b
X				b c

a The connector alignment feature is a rigid bore.

b Add the grade number to the alignment feature grade number.

c The connector alignment feature is a resilient sleeve.

Figure 9 is an example of a simplex active device receptacle interface for PC connector plug. Table 17 gives dimensions of the simplex active device receptacle interface for PC connector plug.

Table 18 and Table 19 give alignment feature grade and mechanical stop feature grade for simplex active device receptacle interface for PC connector plug.

IECNORM.COM : Click to view the full PDF of IEC 61754-4:2022 RLV

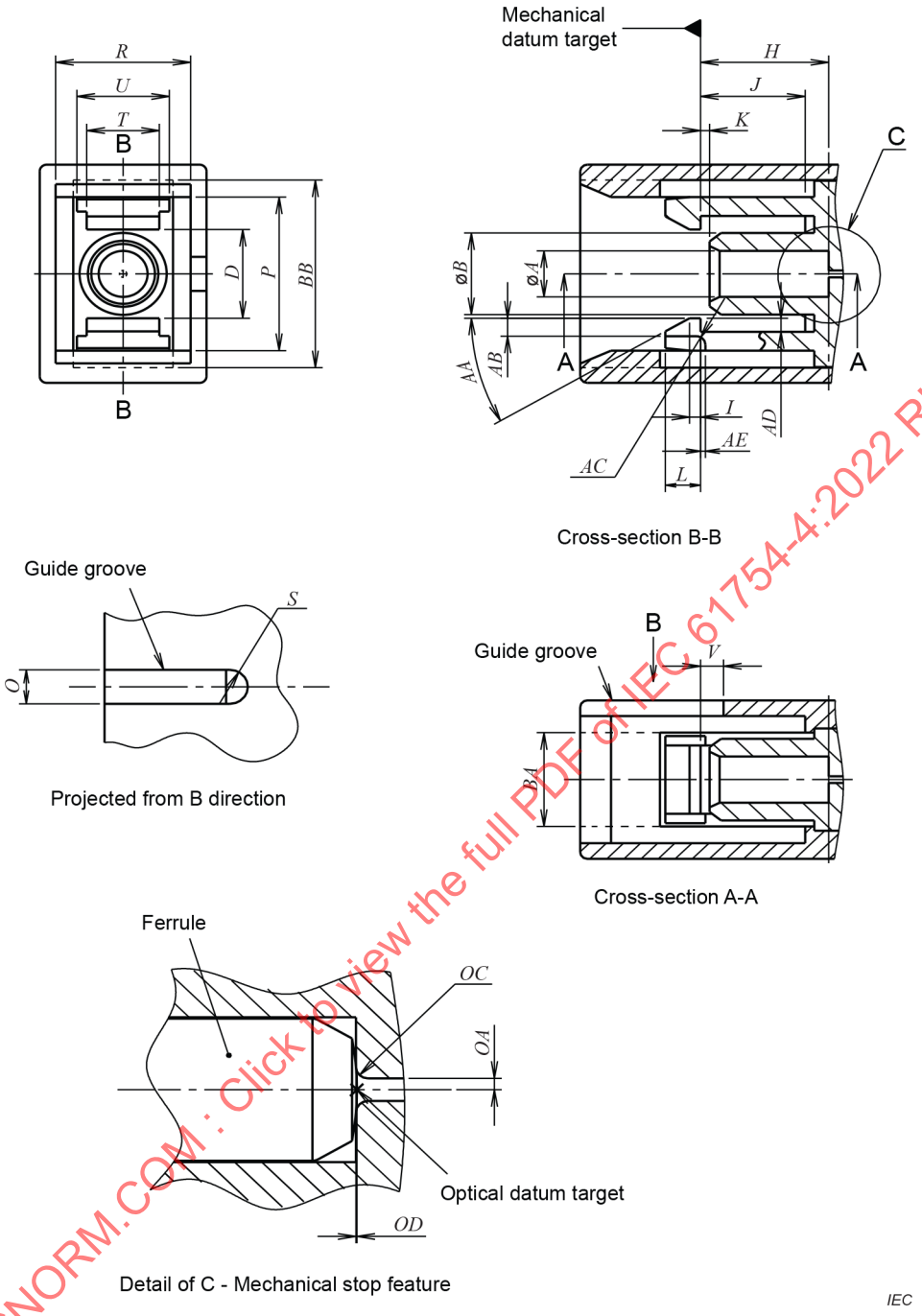

Figure 9 – Simplex active device receptacle interface for PC connector plug

IECNORM.COM : Click to view the full PDF of IEC 61754-4:2022 RLV

Table 17 – Dimensions of the simplex active device receptacle interface for PC connector plug

Reference	Dimensions		Remarks
	Minimum	Maximum	
A	See Table 18		
B	4,39 mm	4,79 mm	
D	4,9 mm	5,5 mm	
H	6,9 mm	7,1 mm	[a]
I	0,4 mm	0,8 mm	
J	5,51 mm	5,90 mm	
K	0,06 mm	1,00 mm	
L	1,9 mm	2,1 mm	
O	2,0 mm	2,2 mm	
P	9,0 mm	9,2 mm	
R	7,4 mm	7,5 mm	
S	1,0 mm	1,1 mm	Radius
T	3,80 mm	4,04 mm	
U	5,0 mm	5,3 mm	
V	0,6 mm	1,6 mm	
AA	27°	33°	Angle, unit in degrees
AB	0,8 mm	1,0 mm	
AC	0,4 mm	0,6 mm	Radius
AD	0,7 mm	0,8 mm	
AE	0,4 mm	0,6 mm	
BA	5,4 mm	5,6 mm	[b]
BB	11,0 mm	11,2 mm	[b]
OA	See Table 19		Radius [a]
OC	0 mm	0,15 mm	Radius
OD	See Table 19		[a]

[a] An example of a mechanical stop feature is shown in Figure 9. A mechanical stop is required to position the fibre ferrule to maintain the optical datum target within the active device receptacle and to avoid damaging the component within the receptacle.

[b] The dotted line structure in Figure 9 is a groove-shape preventing interference when the latch is deformed. It is optional.

IECNORM.COM : Click to view the full PDF of IEC 61754-4:2022 RLV

Table 18 – Alignment feature grade of the simplex active device receptacle interface for PC connector plug

Grade	Dimensions		Remarks
	A		
	Minimum	Maximum	
1	2,500	2,502	a,b
2	2,501	2,504	a,b
3	2,501	2,510	a,b
4	2,501	2,525	a,b
5	–	–	Resilient sleeve b,c

[a] The connector alignment feature is a rigid bore.

[b] Add the grade number to the interface reference number.

[c] The connector alignment feature is a resilient sleeve. The feature accepts a pin gauge shown in Figure 3 to the centre of the receptacle with a force of 2 N to 5,9 N. The centre of the receptacle is defined by the right side position of dimension *H*.

Table 19 – Mechanical stop feature grade of the simplex active device receptacle interface for PC connector plug

Grade	Dimensions mm		Dimensions µm	Remarks
	OA minimum	*OA* maximum	*OD* clearance	
A	0,150	0,2	±5	a b
B	0,150	0,35	±10	a b
N	0,150	1,250		a b
X				b c

[a] The connector alignment feature is a rigid bore.

[b] Add the grade number to the alignment feature grade number.

[c] The connector alignment feature is a resilient sleeve.

Figure 10 is an example of a duplex active device receptacle interface for angled PC connector plug. Table 20 gives dimensions of the duplex active device receptacle interface for angled PC connector plug.

Table 21 and Table 22 give alignment feature grade and mechanical stop feature grade for the duplex active device receptacle interface for angled PC connector plug.

IECNORM.COM : Click to view the full PDF of IEC 61754-4:2022 RLV

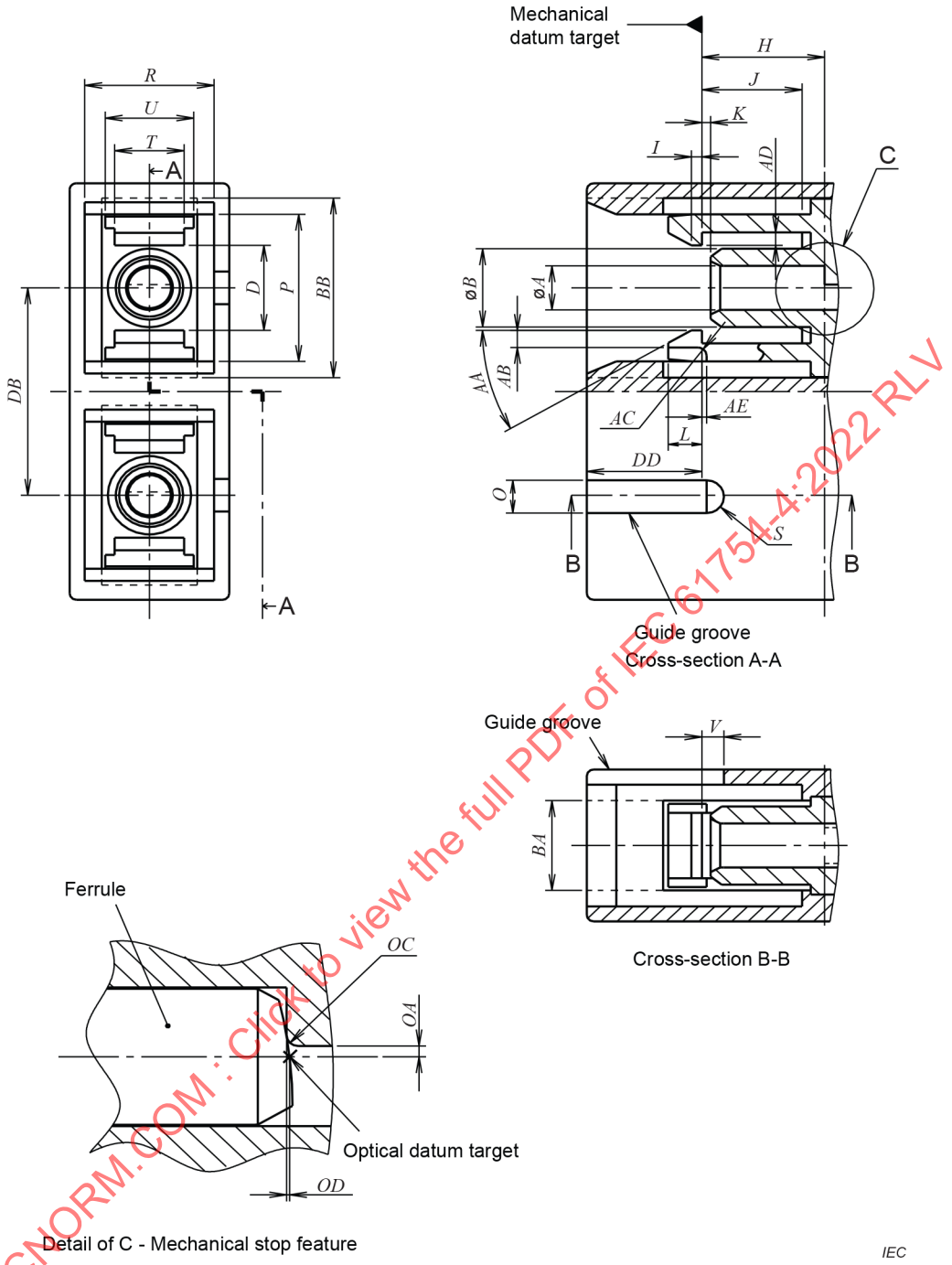

Figure 10 – Duplex active device receptacle interface for angled PC connector plug

IECNORM.COM : Click to view the full PDF of IEC 61754-4:2022 RLV

Table 20 – Dimensions of the duplex active device receptacle interface for angled PC connector plug

Reference	Dimensions		Remarks
	Minimum	Maximum	
A	See Table 21		
B	4,39 mm	4,69 mm	
D	4,9 mm	5,5 mm	
H	6,9 mm	7,1 mm	[a]
I	0,4 mm	0,8 mm	
J	5,51 mm	5,90 mm	
K	0,06 mm	1,00 mm	
L	1,9 mm	2,1 mm	
O	2,0 mm	2,2 mm	
P	9,0 mm	9,1 mm	
R	7,4 mm	7,5 mm	
S	1,0 mm	1,1 mm	Radius
T	3,80 mm	4,04 mm	
U	5,0 mm	5,3 mm	
V	0,6 mm	1,6 mm	
AA	27°	33°	Angle, unit in degrees
AB	0,8 mm	1,0 mm	
AC	0,4 mm	0,6 mm	Radius
AD	0,7 mm	0,8 mm	
AE	0,4 mm	0,6 mm	
BA	5,4 mm	5,6 mm	[b]
BB	11,0 mm	11,2 mm	[b]
DB	12,65 mm	12,75 mm	
DD	–	6,99 mm	
OA	See Table 22		Radius [a]
OC	0 mm	0,15 mm	Radius
OD	See Table 22		[a]

[a] The dotted line structure in Figure 10 is a groove-shape preventing interference when the latch is deformed. It is optional.

[b] An example of a mechanical stop feature is shown in Figure 10. A mechanical stop is required to position the fibre ferrule to maintain the optical datum target within the active device receptacle and to avoid damaging the component within the receptacle.

IECNORM.COM : Click to view the full PDF of IEC 61754-4:2022 RLV

Table 21 – Alignment feature grade of the duplex active device receptacle interface for angled PC connector plug

Grade	Dimensions mm		Remarks
	A		
	Minimum	Maximum	
1	2,500	2,502	a b
2	2,501	2,504	a b
3	2,501	2,510	a b
4	2,501	2,525	a b
5	–	–	Resilient sleeve b c

a The connector alignment feature is a rigid bore.

b Add the grade number to the interface reference number.

c The connector alignment feature is a resilient sleeve. The feature accepts a pin gauge shown in Figure 3 to the centre of the receptacle with a force of 2,9 N to 5,9 N. The centre of the receptacle is defined by the right side position of dimension *H*. The measurement is performed using a single pin gauge.

Table 22 – Mechanical stop feature grade of the duplex active device receptacle interface for angled PC connector plug

Grade	Dimensions mm		Dimensions µm	Remarks
	OA minimum	*OA* maximum	*OD* clearance	
A	0,150	0,2	±15	a b
B	0,150	0,35	±40	a b
N	0,150	–		a b
X				b c

a The connector alignment feature is a rigid bore.

b Add the grade number to the alignment feature grade number.

c The connector alignment feature is a resilient sleeve.

Figure 11 is an example of a duplex active device receptacle interface for PC connector plug. Table 23 gives dimensions of the duplex active device receptacle interface for PC connector plug.

Table 24 and Table 25 give alignment feature grade and mechanical stop feature grade for the duplex active device receptacle interface for PC connector plug.

IECNORM.COM : Click to view the full PDF of IEC 61754-4:2022 RLV

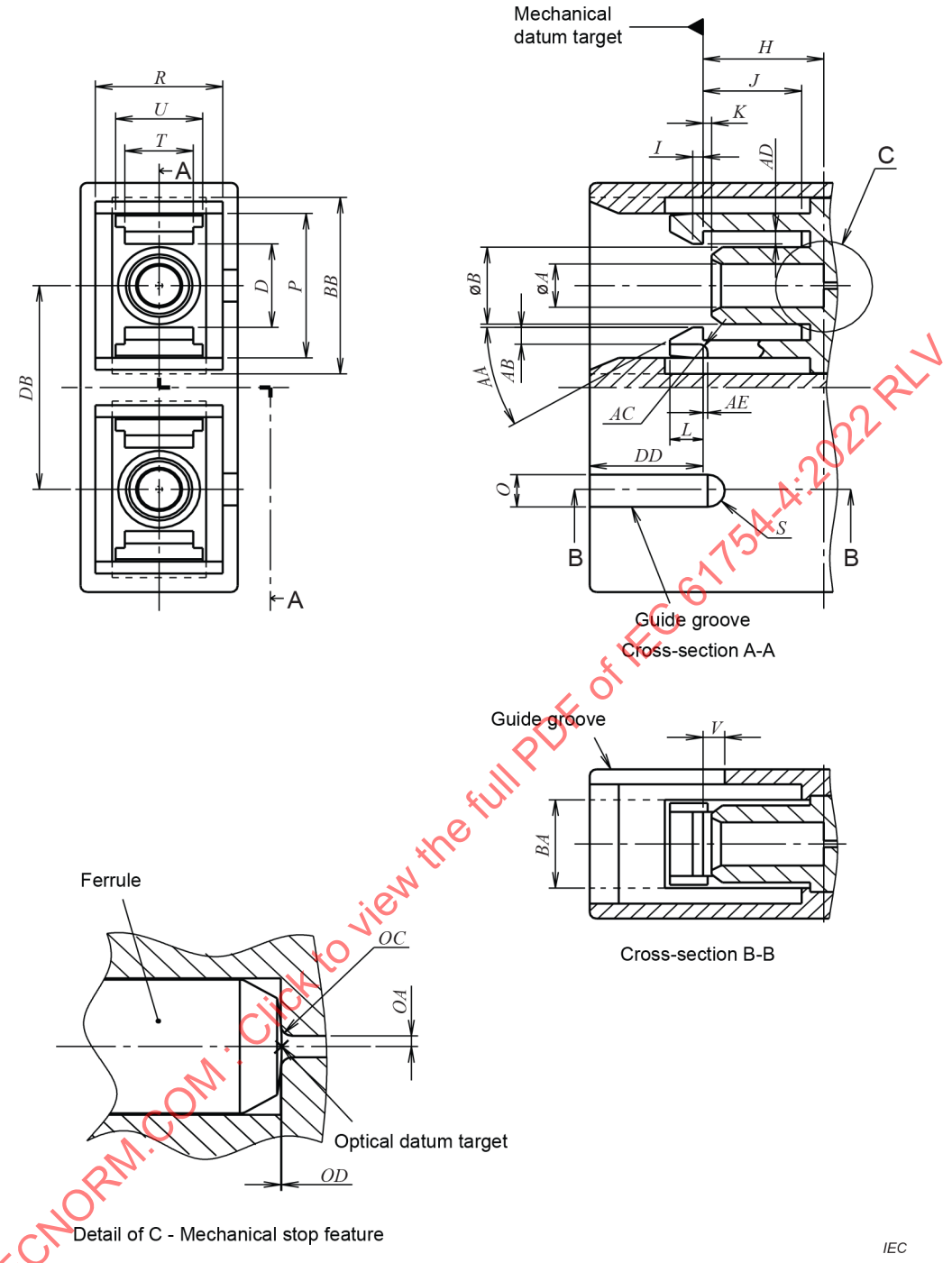

Figure 11 – Duplex active device receptacle interface for PC connector plug

IECNORM.COM : Click to view the full PDF of IEC 61754-4:2022 RLV

Table 23 – Dimensions of the duplex active device receptacle interface for PC connector plug

Reference	Dimensions		Remarks
	Minimum	Maximum	
A	See Table 24		
B	4,39 mm	4,69 mm	
D	4,9 mm	5,5 mm	
H	6,9 mm	7,1 mm	[a]
I	0,4 mm	0,8 mm	
J	5,51 mm	5,90 mm	
K	0,06 mm	1,00 mm	
L	1,9 mm	2,1 mm	
O	2,0 mm	2,2 mm	
P	9,0 mm	9,1 mm	
R	7,4 mm	7,5 mm	
S	1,0 mm	1,1 mm	Radius
T	3,80 mm	4,04 mm	
U	5,0 mm	5,3 mm	
V	0,6 mm	1,6 mm	
AA	27°	33°	Angle, unit in degrees
AB	0,8 mm	1,0 mm	
AC	0,4 mm	0,6 mm	Radius
AD	0,7 mm	0,8 mm	
AE	0,4 mm	0,6 mm	
BA	5,4 mm	5,6 mm	[b]
BB	11,0 mm	11,2 mm	[b]
DB	12,65 mm	12,75 mm	
DD	–	6,99 mm	
OA	See Table 25		Radius [a]
OC	0 mm	0,05 mm	Radius
OD	See Table 25		[a]

[a] An example of a mechanical stop feature is shown in Figure 11. A mechanical stop is required to position the fibre ferrule to maintain the optical datum target within the active device receptacle and to avoid damaging the component within the receptacle.

[b] The dotted line structure in Figure 11 is a groove-shape preventing interference when the latch is deformed. It is optional.

IECNORM.COM : Click to view the full PDF of IEC 61754-4:2022 RLV

Table 24 – Alignment feature grade of the duplex active device receptacle interface for PC connector plug

Grade	Dimensions mm		Remarks
	A		
	Minimum	Maximum	
1	2,500	2,502	a b
2	2,501	2,504	a b
3	2,501	2,510	a b
4	2,501	2,525	a b
5	–	–	Resilient sleeve b c

[a] The connector alignment feature is a rigid bore.

[b] Add the grade number to the interface reference number.

[c] The connector alignment feature is a resilient sleeve. The feature accepts a pin gauge shown in Figure 3 to the centre of the receptacle with a force of 2 N to 5,9 N. The centre of the receptacle is defined by the right side position of dimension *H*.

Table 25 – Mechanical stop feature grade of the duplex active device receptacle interface for PC connector plug

Grade	Dimensions mm		Dimensions µm	Notes
	OA minimum	*OA* maximum	*OD* clearance	
A	0,150	0,2	±5	a b
B	0,150	0,35	±10	a b
N	0,150	1,250		a b
X				b c

[a] The connector alignment feature is a rigid bore.

[b] Add the grade number to the alignment feature grade number.

[c] The connector alignment feature is a resilient sleeve.

Panel dimensions are described in Annex A.

IECNORM.COM : Click to view the full PDF of IEC 61754-4:2022 RLV

Annex A
(informative)

Panel dimensions

A.1 General

When the IEC 61300-2-55 strength of mounted adaptor test is required in the relevant specifications, the test should be performed with a panel having the relevant cut out as shown in Clause A.2 and Clause A.3.

A.2 Simplex adaptor

Figure A.1 and Table A.1 show a recommended panel cut out and the dimensions for simplex adaptor, respectively.

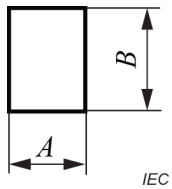

Figure A.1 – Panel cut out

Table A.1 – Dimensions for simplex adaptor

Reference	Dimensions mm		Remarks
	Minimum	Maximum	
A	9,9	10,0	
B	13,5	13,6	
The maximum thickness of the panel should be 1,6 mm. See IEC 60874-14-3.			

A.3 Duplex adaptor

Figure A.2 and Table A.2 show a recommended fixture cut out and the dimensions for duplex adaptor, respectively.

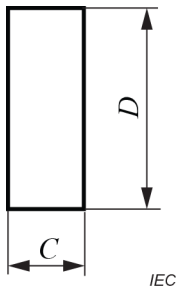

Figure A.2 – Fixture cut out

IECNORM.COM : Click to view the full PDF of IEC 61754-4:2022 RLV

Table A.2 – Dimensions for duplex adaptor

Reference	Dimensions mm		Remarks
	Minimum	Maximum	
C	9,9	10,0	
D	26,3	26,4	
The maximum thickness of the panel should be 1,6 mm. See IEC 60874-19-2.			

IECNORM.COM : Click to view the full PDF of IEC 61754-4:2022 RLV

Bibliography

IEC 60874-14-3, *Connectors for optical fibres and cables – Part 14-3: Detail specification for fibre optic adaptor (simplex) type SC for single-mode fibre*

IEC 60874-19-2, *Connectors for optical fibres and cables – Part 19-2: Fibre optic adaptor (duplex) type SC for single-mode fibre connectors – Detail specification*

IEC 61300-2-55, *Fibre optic interconnecting devices and passive components – Basic test and measurement procedures – Part 2-55: Tests – Strength of mounted adaptor*

IEC 61755-3-1, *Fibre optic connector optical interfaces – Part 3-1: Optical interface, 2,5 mm and 1,25 mm diameter cylindrical full zirconia PC ferrule, single mode fibre*

IEC 61755-3-2, *Fibre optic connector optical interfaces – Part 3-2: Optical interface, 2,5 mm and 1,25 mm diameter cylindrical full zirconia ferrules for 8 degrees angled-PC single mode fibres*

IEC 61755-6-1, *Fibre optic interconnecting devices and passive components – Fibre optic connector optical interfaces – Part 6-1: Optical interfaces for 50 um multimode fibres – General and guidance* [2]

IECNORM.COM : Click to view the full PDF of IEC 61754-4:2022 RLV

[2] Under preparation. Stage at the time of preparation: IEC/CDM 61755-6-1:2021.

SOMMAIRE

AVANT-PROPOS 40
1 Domaine d'application 42
2 Références normatives 42
3 Termes et définitions 42
4 Description 42
5 Interfaces 43
Annexe A (informative) Dimensions des panneaux 71
A.1 Généralités 71
A.2 Raccord simplex 71
A.3 Raccord duplex 71
Bibliographie 73

Figure 1 – Interface de fiche simplex PC 44
Figure 2 – Interface de raccord simplex 46
Figure 3 – Broche calibrée pour raccord 48
Figure 4 – Interface de fiche duplex PC 49
Figure 5 – Interface de raccord duplex 52
Figure 6 – Interface de fiche simplex PC avec angle 54
Figure 7 – Interface de fiche duplex PC avec angle 56
Figure 8 – Interface d'embase de dispositif actif simplex pour fiche PC avec angle 59
Figure 9 – Interface d'embase de dispositif actif simplex pour fiche PC 62
Figure 10 – Interface d'embase de dispositif actif duplex pour fiche PC avec angle 65
Figure 11 – Interface d'embase de dispositif actif duplex pour fiche PC 68
Figure A.1 – Découpe du panneau 71
Figure A.2 – Découpe du dispositif 71

Tableau 1 – Interfaces 43
Tableau 2 – Compatibilité d'accouplement des interfaces 43
Tableau 3 – Dimensions de l'interface de fiche simplex PC 45
Tableau 4 – Caractéristiques de la classe de la fiche simplex PC 46
Tableau 5 – Dimensions de l'interface de raccord simplex 47
Tableau 6 – Caractéristiques de la classe de raccord simplex 47
Tableau 7 – Dimensions de la broche calibrée 48
Tableau 8 – Dimensions de l'interface de fiche duplex PC 50
Tableau 9 – Caractéristiques de la classe de la fiche duplex PC 51
Tableau 10 – Dimensions de l'interface de raccord duplex 53
Tableau 11 – Classe du raccord duplex 53
Tableau 12 – Dimensions des interfaces de fiche simplex PC avec angle interfaces 55
Tableau 13 – Dimensions des interfaces de fiche duplex PC avec angle 57
Tableau 14 – Dimensions de l'interface d'embase de dispositif actif simplex pour fiche PC avec angle 60

IECNORM.COM : Click to view the full PDF of IEC 61754-4:2022 RLV

Tableau 15 – Classe d'élément d'alignement de l'interface d'embase de dispositif actif simplex pour fiche PC avec angle 61
Tableau 16 – Classe d'élément de butée mécanique de l'interface d'embase de dispositif actif simplex pour fiche PC avec angle 61
Tableau 17 – Dimensions de l'interface d'embase de dispositif actif simplex pour fiche PC 63
Tableau 18 – Classe d'élément d'alignement de l'interface d'embase de dispositif actif simplex pour fiche PC 64
Tableau 19 – Classe d'élément de butée mécanique de l'interface d'embase de dispositif actif simplex pour fiche PC 64
Tableau 20 – Dimensions de l'interface d'embase de dispositif actif duplex pour fiche PC avec angle 66
Tableau 21 – Classe d'élément d'alignement de l'interface d'embase de dispositif actif duplex pour fiche PC avec angle 67
Tableau 22 – Classe d'élément de butée mécanique de l'interface d'embase de dispositif actif duplex pour fiche PC avec angle 67
Tableau 23 – Dimensions de l'interface d'embase de dispositif actif duplex pour fiche PC 69
Tableau 24 – Classe d'élément d'alignement de l'interface d'embase de dispositif actif duplex pour fiche PC 70
Tableau 25 – Classe d'élément de butée mécanique de l'interface d'embase de dispositif actif duplex pour fiche PC 70
Tableau A.1 – Dimensions du raccord simplex 71
Tableau A.2 – Dimensions du raccord duplex 72

IECNORM.COM : Click to view the full PDF of IEC 61754-4:2022 RLV

COMMISSION ÉLECTROTECHNIQUE INTERNATIONALE

_____

DISPOSITIFS D'INTERCONNEXION ET COMPOSANTS PASSIFS FIBRONIQUES – INTERFACES DE CONNECTEURS FIBRONIQUES –

Partie 4: Famille de connecteurs de type SC

AVANT-PROPOS

1) La Commission Électrotechnique Internationale (IEC) est une organisation mondiale de normalisation composée de l'ensemble des comités électrotechniques nationaux (Comités nationaux de l'IEC). L'IEC a pour objet de favoriser la coopération internationale pour toutes les questions de normalisation dans les domaines de l'électricité et de l'électronique. À cet effet, l'IEC – entre autres activités – publie des Normes internationales, des Spécifications techniques, des Rapports techniques, des Spécifications accessibles au public (PAS) et des Guides (ci-après dénommés "Publication(s) de l'IEC"). Leur élaboration est confiée à des comités d'études, aux travaux desquels tout Comité national intéressé par le sujet traité peut participer. Les organisations internationales, gouvernementales et non gouvernementales, en liaison avec l'IEC, participent également aux travaux. L'IEC collabore étroitement avec l'Organisation Internationale de Normalisation (ISO), selon des conditions fixées par accord entre les deux organisations.
2) Les décisions ou accords officiels de l'IEC concernant les questions techniques représentent, dans la mesure du possible, un accord international sur les sujets étudiés, étant donné que les Comités nationaux de l'IEC intéressés sont représentés dans chaque comité d'études.
3) Les Publications de l'IEC se présentent sous la forme de recommandations internationales et sont agréées comme telles par les Comités nationaux de l'IEC. Tous les efforts raisonnables sont entrepris afin que l'IEC s'assure de l'exactitude du contenu technique de ses publications; l'IEC ne peut pas être tenue responsable de l'éventuelle mauvaise utilisation ou interprétation qui en est faite par un quelconque utilisateur final.
4) Dans le but d'encourager l'uniformité internationale, les Comités nationaux de l'IEC s'engagent, dans toute la mesure possible, à appliquer de façon transparente les Publications de l'IEC dans leurs publications nationales et régionales. Toutes divergences entre toutes Publications de l'IEC et toutes publications nationales ou régionales correspondantes doivent être indiquées en termes clairs dans ces dernières.
5) L'IEC elle-même ne fournit aucune attestation de conformité. Des organismes de certification indépendants fournissent des services d'évaluation de conformité et, dans certains secteurs, accèdent aux marques de conformité de l'IEC. L'IEC n'est responsable d'aucun des services effectués par les organismes de certification indépendants.
6) Tous les utilisateurs doivent s'assurer qu'ils sont en possession de la dernière édition de cette publication.
7) Aucune responsabilité ne doit être imputée à l'IEC, à ses administrateurs, employés, auxiliaires ou mandataires, y compris ses experts particuliers et les membres de ses comités d'études et des Comités nationaux de l'IEC, pour tout préjudice causé en cas de dommages corporels et matériels, ou de tout autre dommage de quelque nature que ce soit, directe ou indirecte, ou pour supporter les coûts (y compris les frais de justice) et les dépenses découlant de la publication ou de l'utilisation de cette Publication de l'IEC ou de toute autre Publication de l'IEC, ou au crédit qui lui est accordé.
8) L'attention est attirée sur les références normatives citées dans cette publication. L'utilisation de publications référencées est obligatoire pour une application correcte de la présente publication.
9) L'attention est attirée sur le fait que certains des éléments de la présente Publication de l'IEC peuvent faire l'objet de droits de brevet. L'IEC ne saurait être tenue pour responsable de ne pas avoir identifié de tels droits de brevets.

L'IEC 61754-4 a été établie par le sous-comité 86B: Dispositifs d'interconnexion et composants passifs à fibres optiques, du comité d'études 86 de l'IEC: Fibres optiques. Il s'agit d'une Norme internationale.

La présente troisième édition annule et remplace la deuxième édition publiée en 2013, et constitue une révision technique.

La présente édition inclut les modifications techniques majeures suivantes par rapport à l'édition précédente:

a) ajout de la méthode d'essai de l'IEC 61300-3-22 sur la force de compression de la férule;

IECNORM.COM : Click to view the full PDF of IEC 61754-4:2022 RLV

b) ajout de l'Annexe A (informative) avec les exigences relatives aux dimensions des découpes pour réaliser les essais de résistance des raccords montés.

Le texte de cette Norme internationale est issu des documents suivants:

Projet	Rapport de vote
86B/4563/FDIS	86B/4584/RVD

Le rapport de vote indiqué dans le tableau ci-dessus donne toute information sur le vote ayant abouti à son approbation.

La langue employée pour l'élaboration de cette Norme internationale est l'anglais.

Le présent document a été rédigé selon les Directives ISO/IEC, Partie 2, il a été développé selon les Directives ISO/IEC, Partie 1 et les Directives ISO/IEC, Supplément IEC, disponibles sous www.iec.ch/members_experts/refdocs. Les principaux types de documents développés par l'IEC sont décrits plus en détail sous www.iec.ch/standardsdev/publications.

Une liste de toutes les parties de la série IEC 61754, publiées sous le titre général *Dispositifs d'interconnexion et composants passifs fibroniques – Interfaces de connecteurs fibroniques*, peut être consultée sur le site web de l'IEC.

Les futures normes de cette série porteront le nouveau titre général cité ci-dessus. Le titre des normes qui existent déjà dans cette série sera mis à jour lors de leur prochaine édition.

Le comité a décidé que le contenu du présent document ne sera pas modifié avant la date de stabilité indiquée sur le site web de l'IEC sous "webstore.iec.ch" dans les données relatives au document recherché. À cette date, le document sera

- reconduit,
- supprimé,
- remplacé par une édition révisée, ou
- amendé.

IECNORM.COM : Click to view the full PDF of IEC 61754-4:2022 RLV

DISPOSITIFS D'INTERCONNEXION ET COMPOSANTS PASSIFS FIBRONIQUES – INTERFACES DE CONNECTEURS FIBRONIQUES –

Partie 4: Famille de connecteurs de type SC

1 Domaine d'application

La présente partie de l'IEC 61754 spécifie les dimensions d'interfaces normalisées pour la famille de connecteurs de type SC.

2 Références normatives

Les documents suivants sont cités dans le texte de sorte qu'ils constituent, pour tout ou partie de leur contenu, des exigences du présent document. Pour les références datées, seule l'édition citée s'applique. Pour les références non datées, la dernière édition du document de référence s'applique (y compris les éventuels amendements).

IEC 61300-3-22, *Dispositifs d'interconnexion et composants passifs à fibres optiques – Méthodes fondamentales d'essais et de mesures – Partie 3-22: Examens et mesures – Force de compression des férules*

IEC 61754-1, *Dispositifs d'interconnexion et composants passifs à fibres optiques – Interfaces de connecteurs à fibres optiques – Partie 1: Généralités et lignes directrices*

3 Termes et définitions

Pour les besoins du présent document, les termes et définitions de l'IEC 61754-1 s'appliquent.

L'ISO et l'IEC tiennent à jour des bases de données terminologiques destinées à être utilisées en normalisation, consultables aux adresses suivantes:

- IEC Electropedia: disponible à l'adresse http://www.electropedia.org/
- ISO Online browsing platform: disponible à l'adresse http://www.iso.org/obp

4 Description

Le connecteur parent de la famille des connecteurs de type SC est une fiche à position unique caractérisée par un diamètre nominal de la férule de 2,5 mm. Il comprend un mécanisme de couplage pousser-tirer qui est chargé par ressort par rapport à la férule dans la direction de l'axe optique. La fiche a une clavette mâle unique qui peut être utilisée pour orienter et limiter la rotation relative entre le connecteur et le composant avec lequel il est accouplé. Le mécanisme d'alignement optique du connecteur est de type manchon.

Le présent document définit les dimensions d'interfaces normalisées des embases de dispositifs actifs pour les connecteurs de type SC. Les embases sont utilisées pour retenir les fiches des connecteurs et maintenir mécaniquement la cible de référence optique des fiches dans une position définie à l'intérieur des boîtiers d'embases.

IECNORM.COM : Click to view the full PDF of IEC 61754-4:2022 RLV

5 Interfaces

Le présent document contient les interfaces normalisées indiquées dans le Tableau 1.

Tableau 1 – Interfaces

Interface IEC 61754-4-1	Interface de fiches simplex – pousser/tirer, contact physique (PC - physical contact)
Interface IEC 61754-4-2	Interface de raccord simplex – pousser/tirer
Interface IEC 61754-4-3	Interface de fiches duplex – pousser/tirer, contact physique (PC - physical contact)
Interface IEC 61754-4-4	Interface de raccord duplex – pousser/tirer
Interface IEC 61754-4-5	Interface de fiche simplex – pousser/tirer, contact physique avec angle (APC - angled physical contact) 8°
Interface IEC 61754-4-6	Interface de fiche duplex – pousser/tirer, APC 8°
Interface IEC 61754-4-X1	Interface d'embase de dispositif actif simplex – pour fiche APC 8°
Interface IEC 61754-4-X2	Interface d'embase de dispositif actif simplex pour fiche PC
Interface IEC 61754-4-X3	Interface d'embase de dispositif actif duplex – pour fiche APC 8°
Interface IEC 61754-4-X4	Interface d'embase de dispositif actif duplex pour fiche PC

Le Tableau 2 présente la compatibilité d'accouplement des interfaces.

Tableau 2 – Compatibilité d'accouplement des interfaces

Fiches	**Raccords/embases de dispositifs actifs**					
	61754-4-2	**61754-4-4**	**61754-4-X1**	**61754-4-X2**	**61754-4-X3**	**61754-4-X4**
61754-4-1	Accouplable	Accouplable	Non accouplable	Accouplable	Non accouplable	Accouplable
61754-4-3	Non accouplable	Accouplable	Non accouplable	Non accouplable	Non accouplable	Accouplable
61754-4-5	Accouplable	Accouplable	Accouplable	Non accouplable	Accouplable	Non accouplable
61754-4-6	Non accouplable	Accouplable	Non accouplable	Non accouplable	Accouplable	Non accouplable

La Figure 1 représente un exemple d'interface de fiche simplex PC. Le Tableau 3 donne les dimensions de l'interface de fiche simplex PC et le Tableau 4 donne les caractéristiques de la classe de l'interface de fiche simplex PC.

Un chanfrein ou un arrondi est admis à une profondeur maximale de 1,8 mm par rapport à la face d'extrémité de la férule.

IECNORM.COM : Click to view the full PDF of IEC 61754-4:2022 RLV

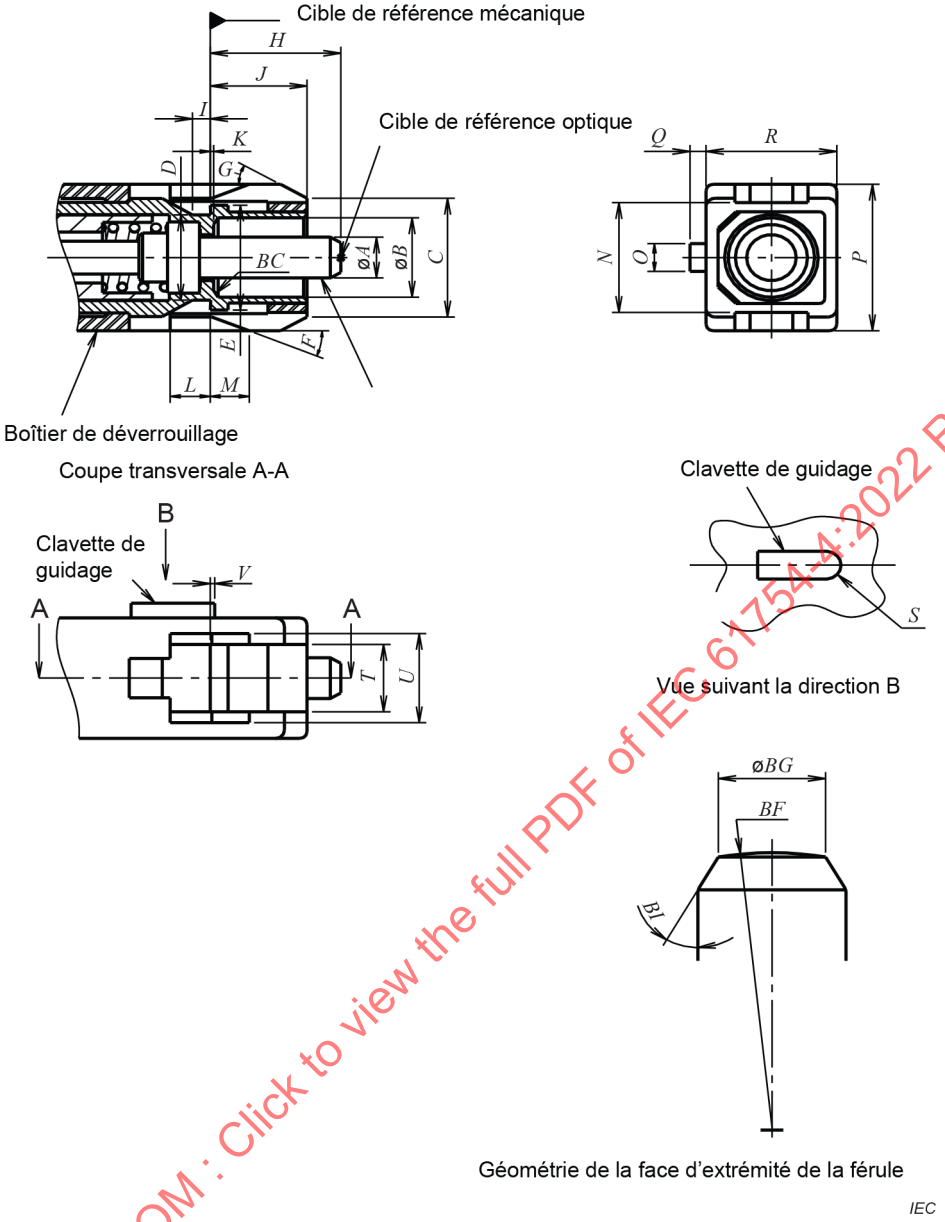

Figure 1 – Interface de fiche simplex PC

IECNORM.COM : Click to view the full PDF of IEC 61754-4:2022 RLV

Tableau 3 – Dimensions de l'interface de fiche simplex PC

Référence	Dimensions		Remarques
	Minimum	Maximum	
A	Voir le Tableau 4		
B	4,8 mm	4,9 mm	
C	6,8 mm	7,4 mm	
D	4,9 mm	5,3 mm	
E	6,7 mm	6,8 mm	
F	19°	23°	Angle, unité en degrés
G	25°	35°	Angle, unité en degrés
H	7,15 mm	7,5 mm	[a]
I	0,8 mm	1,2 mm	
J	5,3 mm	5,5 mm	
K	–	0,05 mm	
L	2,11 mm	–	[b]
M	2,0 mm	2,8 mm	[b c]
N	6,6 mm	6,8 mm	
O	1,6 mm	1,8 mm	
P	8,89 mm	8,99 mm	
Q	0,8 mm	1,0 mm	
R	7,29 mm	7,39 mm	
S	0,8 mm	0,90 mm	Rayon
T	4,05 mm	4,15 mm	
U	5,4 mm	5,6 mm	
V	0 mm	0,5 mm	[b]
BC	0 mm	0,5 mm	Chanfrein ou arrondi
BF	Voir l'IEC 61755-3-1		Rayon [d]
BG	Voir l'IEC 61755-3-1		Diamètre
BI	25°	35°	Angle, unité en degrés

[a] La dimension *H* est donnée pour une face d'extrémité de fiche lorsqu'elle n'est pas accouplée. La férule peut être déplacée sous l'effet d'une force de compression axiale, avec des faces d'extrémité en contact direct. Par conséquent, la dimension *H* est variable. La force de compression de la férule doit être comprise entre 7,8 N et 11,8 N lorsque la dimension *H* est de 7,0 mm ± 0,1 mm. La force de compression doit être mesurée conformément à l'IEC 61300-3-22.

[b] Le boîtier de déverrouillage doit pouvoir bouger vers la droite et vers la gauche. Les dimensions *L*, *M* et *V* sont données pour le boîtier de déverrouillage en position extrême à droite. La dimension *M* doit être négative quand le boîtier de déverrouillage est en position extrême à gauche.

[c] L'extrémité droite de *M* doit se trouver à gauche de la cible de référence mécanique lorsque le boîtier de déverrouillage est en position extrême à gauche.

[d] L'excentricité du dôme de la face d'extrémité polie sphérique doit être inférieure à 50 µm.

IECNORM.COM : Click to view the full PDF of IEC 61754-4:2022 RLV

Tableau 4 – Caractéristiques de la classe de la fiche simplex PC

Classe	Dimensions mm		Remarques
	A		
	Minimum	Maximum	
A	Voir l'IEC 61755-3-1		a
B	Voir l'IEC 61755-3-1		a
C	Voir l'IEC 61755-3-1		a
D	Voir l'IEC 61755-3-1		a
A_m	Classe non spécifiée à ce stade		a b
B_m	2,497	2,500	a b
C_m	2,494	2,500	a b

[a] Ajouter le numéro de classe au numéro de référence de l'interface.

[b] Se référer à la future IEC 61755-6-1 pour des recommandations[1].

La Figure 2 représente un exemple d'interface de raccord simplex. Le Tableau 5 donne les dimensions de l'interface de raccords simplex et le Tableau 6 donne la classe de l'interface de raccords simplex.

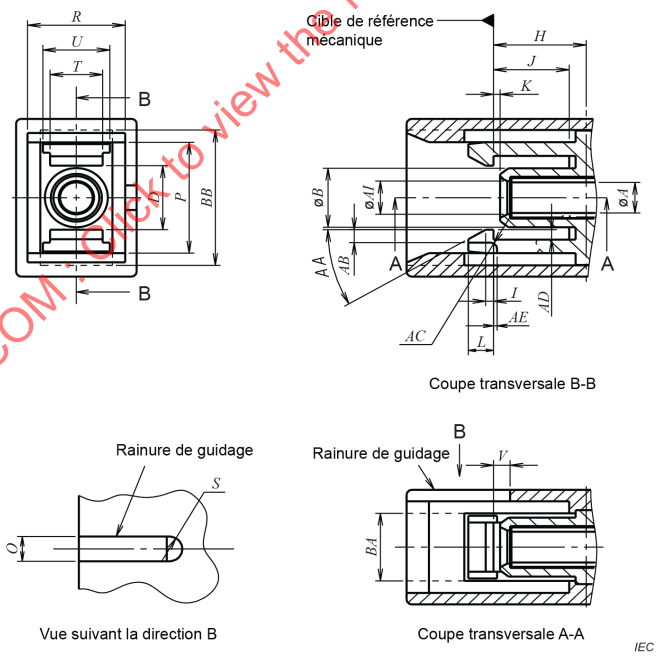

Figure 2 – Interface de raccord simplex

IECNORM.COM : Click to view the full PDF of IEC 61754-4:2022 RLV

[1] En cours d'élaboration. Stade au moment de la publication: IEC/CDM 61755-6-1:2021.

Tableau 5 – Dimensions de l'interface de raccord simplex

Référence	Dimensions		Remarques
	Minimum	Maximum	
A	Voir le Tableau 6		
B	4,39 mm	4,79 mm	
D	4,9 mm	5,5 mm	
H	6,9 mm	7,1 mm	
I	0,4 mm	0,8 mm	
J	5,51 mm	5,90 mm	
K	0,06 mm	1,00 mm	
L	1,9 mm	2,1 mm	
O	2,0 mm	2,2 mm	
P	9,0 mm	9,1 mm	
R	7,4 mm	7,5 mm	
S	1,0 mm	1,1 mm	Rayon
T	3,80 mm	4,04 mm	
U	5,0 mm	5,3 mm	
V	0,6 mm	1,6 mm	
AA	27°	33°	Angle, unité en degrés
AB	0,8 mm	1,0 mm	
AC	0,4 mm	0,6 mm	Rayon
AD	0,7 mm	0,8 mm	
AE	0,4 mm	0,6 mm	
AI	2,7 mm	2,8 mm	
BA	5,4 mm	5,6 mm	[a]
BB	10,8 mm	11,2 mm	[a]

[a] La structure représentée par une ligne en pointillés à la Figure 2 est une rainure empêchant les interférences lorsque le verrou est déformé. Cette rainure est facultative.

Tableau 6 – Caractéristiques de la classe de raccord simplex

Classe	Dimensions mm		Remarques
	A		
	Minimum	Maximum	
[a]			Manchon élastique [a b]

[a] Ajouter le numéro de classe au numéro de référence de l'interface.

[b] L'élément d'alignement du connecteur est un manchon élastique. L'élément doit accepter une broche calibrée, représentée à la Figure 3, au centre du raccord avec une force de 2 N à 5,9 N à condition qu'une autre broche calibrée soit insérée dans l'élément par l'autre côté. Le centre du raccord est défini par la position du côté droit de la dimension *H*.

La Figure 3 représente un exemple de broche calibrée pour raccord. Le Tableau 7 donne les dimensions de la broche calibrée.

IECNORM.COM : Click to view the full PDF of IEC 61754-4:2022 RLV

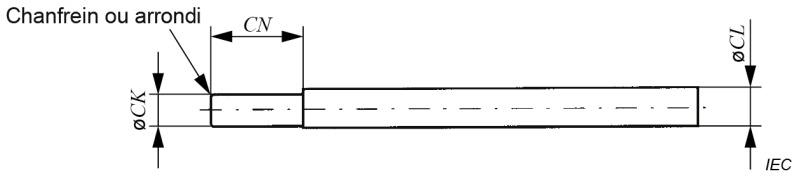

Figure 3 – Broche calibrée pour raccord

Tableau 7 – Dimensions de la broche calibrée

Référence	Dimensions mm		Remarques
	Minimum	Maximum	
CK	2,498 5	2,499 5	Rugosité de surface: classe N4 (0,2 µm de rayon)
CL	2,8	4,8	
CN	7		

La Figure 4 représente un exemple d'interface de fiche duplex PC. Le Tableau 8 donne les dimensions de l'interface de fiche duplex PC et le Tableau 9 donne la classe de l'interface de fiche duplex PC.

Un chanfrein ou un arrondi est admis à une profondeur maximale de 1,8 mm par rapport à la face d'extrémité de la férule.

IECNORM.COM : Click to view the full PDF of IEC 61754-4:2022 RLV

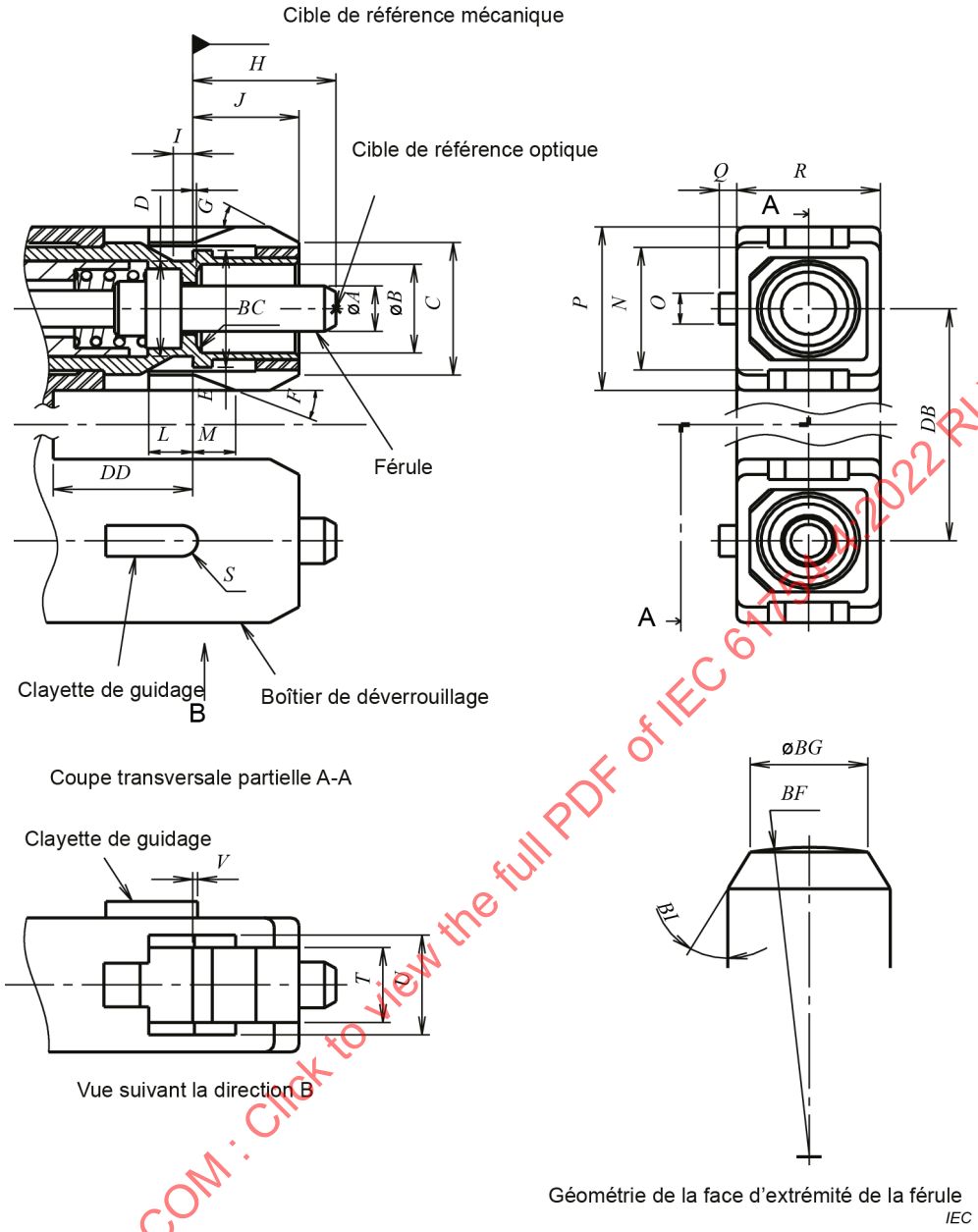

Figure 4 – Interface de fiche duplex PC

IECNORM.COM : Click to view the full PDF of IEC 61754-4:2022 RLV

Tableau 8 – Dimensions de l'interface de fiche duplex PC

Référence	Dimensions		Remarques
	Minimum	Maximum	
A	Voir le Tableau 9		
B	4,8 mm	4,9 mm	
C	6,8 mm	7,4 mm	
D	4,9 mm	5,3 mm	
E	6,7 mm	6,8 mm	
F	19°	23°	Angle, unité en degrés
G	25°	35°	Angle, unité en degrés
H	7,15 mm	7,5 mm	[a]
I	0,8 mm	1,2 mm	
J	5,3 mm	5,5 mm	
K	–	0,05 mm	
L	2,11 mm	–	[b]
M	2,0 mm	2,8 mm	[b] [c]
N	6,6 mm	6,8 mm	
O	1,6 mm	1,8 mm	
P	8,79 mm	8,89 mm	[d]
Q	0,8 mm	1,0 mm	
R	7,29 mm	7,39 mm	
S	0,8 mm	0,9 mm	Rayon
T	4,05 mm	4,15 mm	
U	5,4 mm	5,6 mm	
V	0 mm	0,5 mm	[b]
BC	0 mm	0,5 mm	Chanfrein ou arrondi
BF	Voir l'IEC 61755-3-1		Rayon [f]
BG	Voir l'IEC 61755-3-1		Diamètre
BI	25°	35°	Angle, unité en degrés
DB	12,65 mm	12,75 mm	[e]
DD	7 mm	35 mm	

[a] La dimension *H* est donnée pour une face d'extrémité de fiche lorsqu'elle n'est pas accouplée. La férule peut être déplacée sous l'effet d'une force de compression axiale, avec des faces d'extrémité en contact direct. Par conséquent, la dimension *H* est variable. La force de compression de la férule doit être comprise entre 7,8 N et 11,8 N lorsque la dimension *H* est de 7,0 mm ± 0,1 mm. La force de compression doit être mesurée conformément à l'IEC 61300-3-22.

[b] Le boîtier de déverrouillage doit pouvoir bouger vers la droite et vers la gauche. Les dimensions *L*, *M* et *V* sont données pour le boîtier de déverrouillage en position extrême à droite.

[c] L'extrémité droite de *M* doit se trouver à gauche de la cible de référence mécanique lorsque le boîtier de déverrouillage est en position extrême à gauche.

[d] Le boîtier de déverrouillage peut être un manchon rigide. Lorsque deux fiches simplex sont retenues ensemble par un manchon souple, la dimension *P* doit être comprise entre 8,89 mm et 8,99 mm.

[e] Le boîtier de déverrouillage peut être un manchon rigide. Lorsque deux fiches simplex sont retenues ensemble par un manchon souple, la dimension *DB* doit être comprise entre 12,25 mm et 13,15 mm.

[f] L'excentricité du dôme de la face d'extrémité polie sphérique doit être inférieure à 50 µm.

IECNORM.COM : Click to view the full PDF of IEC 61754-4:2022 RLV

Tableau 9 – Caractéristiques de la classe de la fiche duplex PC

Classe	Dimensions mm		Remarques
	A		
	Minimum	Maximum	
A	Voir l'IEC 61755-3-1		a
B	Voir l'IEC 61755-3-1		a
C	Voir l'IEC 61755-3-1		a
D	Voir l'IEC 61755-3-1		a
A_m	Classe non spécifiée à ce stade		a b
B_m	2,497	2,500	a b
C_m	2,494	2,500	a b

[a] Ajouter le numéro de classe au numéro de référence de l'interface.

[b] Se référer à la future IEC 61755-6-1 pour des recommandations.

La Figure 5 représente un exemple d'interface de raccord duplex. Le Tableau 10 donne les dimensions de l'interface de raccords duplex et le Tableau 11 donne la classe de l'interface de raccords duplex.

IECNORM.COM : Click to view the full PDF of IEC 61754-4:2022 RLV

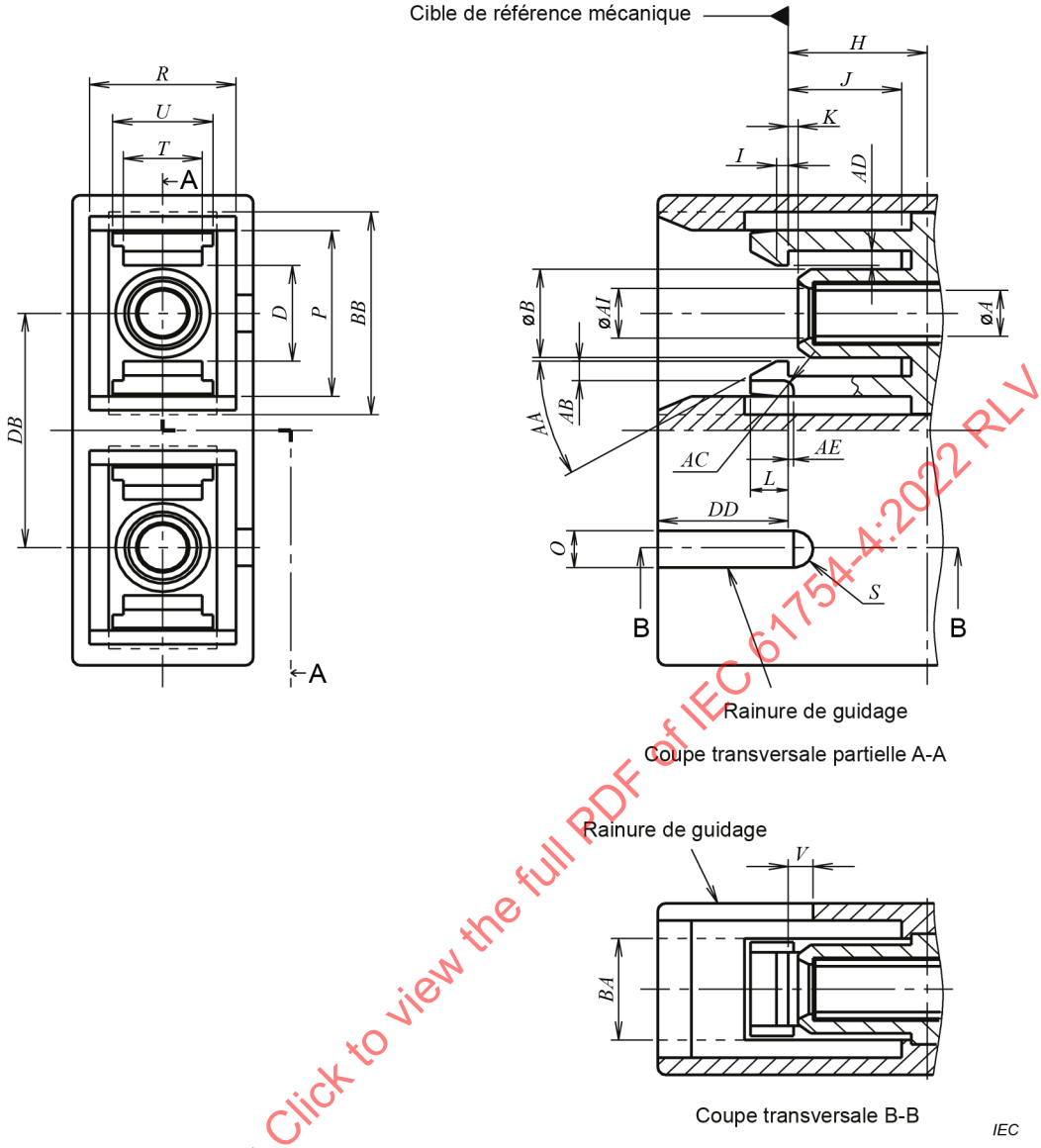

Figure 5 – Interface de raccord duplex

IECNORM.COM : Click to view the full PDF of IEC 61754-4:2022 RLV