IEC 62282-3-100

Edition 1.0 2012-02

INTERNATIONAL STANDARD

Withdrawn
IECNORM.COM : Click to view the full PDF of IEC 62282-3-100:2012

Fuel cell technologies –
Part 3-100: Stationary fuel cell power systems – Safety

THIS PUBLICATION IS COPYRIGHT PROTECTED

Copyright © 2012 IEC, Geneva, Switzerland

All rights reserved. Unless otherwise specified, no part of this publication may be reproduced or utilized in any form or by any means, electronic or mechanical, including photocopying and microfilm, without permission in writing from either IEC or IEC's member National Committee in the country of the requester.
If you have any questions about IEC copyright or have an enquiry about obtaining additional rights to this publication, please contact the address below or your local IEC member National Committee for further information.

IEC Central Office
3, rue de Varembé
CH-1211 Geneva 20
Switzerland

Tel.: +41 22 919 02 11
Fax: +41 22 919 03 00
info@iec.ch
www.iec.ch

About the IEC

The International Electrotechnical Commission (IEC) is the leading global organization that prepares and publishes International Standards for all electrical, electronic and related technologies.

About IEC publications

The technical content of IEC publications is kept under constant review by the IEC. Please make sure that you have the latest edition, a corrigenda or an amendment might have been published.

Useful links:

IEC publications search - www.iec.ch/searchpub

The advanced search enables you to find IEC publications by a variety of criteria (reference number, text, technical committee,…).
It also gives information on projects, replaced and withdrawn publications.

IEC Just Published - webstore.iec.ch/justpublished

Stay up to date on all new IEC publications. Just Published details all new publications released. Available on-line and also once a month by email.

Electropedia - www.electropedia.org

The world's leading online dictionary of electronic and electrical terms containing more than 30 000 terms and definitions in English and French, with equivalent terms in additional languages. Also known as the International Electrotechnical Vocabulary (IEV) on-line.

Customer Service Centre - webstore.iec.ch/csc

If you wish to give us your feedback on this publication or need further assistance, please contact the Customer Service Centre: csc@iec.ch.

Withdrawn
IECNORM.COM : Click to view the full PDF of IEC 62282-5-100:2012

IEC 62282-3-100

Edition 1.0 2012-02

INTERNATIONAL STANDARD

Fuel cell technologies –
Part 3-100: Stationary fuel cell power systems – Safety

Withdrawn
IECNORM.COM : Click to view the full PDF of IEC 62282-3-100:2012

INTERNATIONAL
ELECTROTECHNICAL
COMMISSION

PRICE CODE XB

ICS 27.070

ISBN 978-2-88912-908-9

Warning! Make sure that you obtained this publication from an authorized distributor.

® Registered trademark of the International Electrotechnical Commission

CONTENTS

FOREWORD 5
INTRODUCTION 7
1 Scope 9
2 Normative references 10
3 Terms and definitions 12
4 Safety requirements and protective measures 17
4.1 General safety strategy 17
4.2 Physical environment and operating conditions 18
4.2.1 General 18
4.2.2 Electrical power input 18
4.2.3 Physical environment 18
4.2.4 Fuel input 18
4.2.5 Water input 18
4.2.6 Vibration, shock and bump 19
4.2.7 Handling, transportation, and storage 19
4.2.8 System purging 19
4.3 Selection of materials 19
4.4 General requirements 20
4.5 Pressure equipment and piping 22
4.5.1 Pressure equipment 22
4.5.2 Piping systems 22
4.5.3 Flue gas venting 23
4.5.4 Gas-conveying parts 24
4.6 Protection against fire or explosion hazards 24
4.6.1 Prevention against fire and explosion hazards in fuel cell power systems provided with cabinets 24
4.6.2 Prevention of fire and explosion hazards in burners 26
4.6.3 Prevention of fire and explosion hazards in catalytic fuel oxidation systems (catalytic burners) 28
4.7 Electrical safety 29
4.8 Electromagnetic compatibility (EMC) 29
4.9 Control systems and protective components 29
4.9.1 General requirements 29
4.9.2 Control systems 29
4.9.3 Protective components 32
4.10 Pneumatic and hydraulic powered equipment 33
4.11 Valves 33
4.11.1 Shut-off valves 33
4.11.2 Fuel valves 33
4.12 Rotating equipment 34
4.12.1 General requirements 34
4.12.2 Compressors 34
4.12.3 Pumps 34
4.13 Cabinets 35
4.14 Thermal insulating materials 35
4.15 Utilities 36
4.15.1 General requirements 36

IECNORM.COM : Click to view the full PDF of IEC 62282-3-100:2012
Withdrawn

4.15.2 Water supply ... 36
4.15.3 Fuel gas supply ... 36
4.15.4 Electrical connections ... 36
4.16 Installation and maintenance ... 38
4.16.1 Installation ... 38
4.16.2 Maintenance ... 38
5 Type tests ... 38
5.1 General requirements ... 38
5.1.1 Operating parameters for tests ... 39
5.2 Test fuels ... 40
5.3 Basic test arrangements ... 41
5.4 Leakage tests ... 41
5.4.1 General ... 41
5.4.2 Pneumatic leakage tests ... 41
5.4.3 Hydrostatic leakage tests ... 43
5.5 Strength tests ... 44
5.5.1 General ... 44
5.5.2 Pneumatic strength tests ... 44
5.5.3 Hydrostatic strength test ... 45
5.6 Normal operation type test ... 46
5.7 Electrical overload test ... 46
5.8 Shutdown parameters ... 46
5.9 Burner operating characteristics tests ... 46
5.9.1 General ... 46
5.9.2 General testing ... 46
5.9.3 Limit testing ... 47
5.10 Automatic control of burners and catalytic oxidation reactors ... 47
5.10.1 General ... 47
5.10.2 Automatic ignition control burners ... 47
5.10.3 Automated control of catalytic oxidation reactors ... 50
5.11 Exhaust gas temperature test ... 50
5.12 Surface and component temperatures ... 50
5.13 Wind tests ... 51
5.13.1 General ... 51
5.13.2 Wind source calibration procedure for winds directed perpendicular to the wall ... 51
5.13.3 Verification of operation of outdoor fuel cell power systems under wind conditions ... 52
5.13.4 Verification of operation of indoor fuel cell power systems vented horizontally through an outside wall ... 53
5.13.5 Carbon monoxide (CO) and flammable gas components emissions under wind – Indoor units ... 55
5.13.6 Carbon monoxide (CO) and flammable gas components emissions under wind – Outdoor units ... 55
5.14 Rain test ... 56
5.15 Emissions ... 56
5.15.1 General ... 56
5.15.2 Carbon monoxide (CO) and flammable gas emissions ... 56
5.15.3 Normal conditions ... 57
5.16 Blocked condensate line test ... 57

IECNORM.COM : Click to view the full PDF of IEC 62282-3-100:2012
Withdrawn

5.17 Condensate discharge test 57
5.18 Electrical safety tests 58
5.19 EMC test 58
5.20 Vent system leakage test 58
5.21 Leakage tests (repeat) 59
6 Routine tests 59
7 Marking, labelling and packaging 60
7.1 General requirements 60
7.2 Fuel cell power system marking 60
7.3 Marking of components 61
7.4 Technical documentation 61
7.4.1 General 61
7.4.2 Installation manual 61
7.4.3 User's information manual 62
7.4.4 Operating manual 65
7.4.5 Maintenance manual 66
Annex A (informative) Significant hazards, hazardous situations and events dealt with in this standard 67
Annex B (informative) Carburization and material compatibility for hydrogen service 69
Bibliography 75

Figure 1 – Stationary fuel cell power systems 7
Figure 2 – Test wall with static pressure ports and vent terminal locations 52
Figure 3 – Vent test wall 53
Figure 4 – Piezo ring and details of typical construction 54
Figure 5 – Safety precautions for odorized gas-fuelled systems 63
Figure 6 – Safety precautions for odorant-free gas fuelled systems 64
Figure 7 – Safety precautions for liquid fuelled systems 64

Table 1 – Allowable surface temperatures rises 21
Table 2 – Leakage test requirements [a, d, e] 43
Table 3 – Ultimate strength test requirements [a, d] 45
Table 4 – Wind calibration 52
Table A.1 – Hazardous situations and events 67

IECNORM.COM : Click to view the full PDF of IEC 62282-3-100:2012
Withdrawn

INTERNATIONAL ELECTROTECHNICAL COMMISSION

FUEL CELL TECHNOLOGIES –

Part 3-100: Stationary fuel cell power systems – Safety

FOREWORD

1) The International Electrotechnical Commission (IEC) is a worldwide organization for standardization comprising all national electrotechnical committees (IEC National Committees). The object of IEC is to promote international co-operation on all questions concerning standardization in the electrical and electronic fields. To this end and in addition to other activities, IEC publishes International Standards, Technical Specifications, Technical Reports, Publicly Available Specifications (PAS) and Guides (hereafter referred to as "IEC Publication(s)"). Their preparation is entrusted to technical committees; any IEC National Committee interested in the subject dealt with may participate in this preparatory work. International, governmental and non-governmental organizations liaising with the IEC also participate in this preparation. IEC collaborates closely with the International Organization for Standardization (ISO) in accordance with conditions determined by agreement between the two organizations.

2) The formal decisions or agreements of IEC on technical matters express, as nearly as possible, an international consensus of opinion on the relevant subjects since each technical committee has representation from all interested IEC National Committees.

3) IEC Publications have the form of recommendations for international use and are accepted by IEC National Committees in that sense. While all reasonable efforts are made to ensure that the technical content of IEC Publications is accurate, IEC cannot be held responsible for the way in which they are used or for any misinterpretation by any end user.

4) In order to promote international uniformity, IEC National Committees undertake to apply IEC Publications transparently to the maximum extent possible in their national and regional publications. Any divergence between any IEC Publication and the corresponding national or regional publication shall be clearly indicated in the latter.

5) IEC itself does not provide any attestation of conformity. Independent certification bodies provide conformity assessment services and, in some areas, access to IEC marks of conformity. IEC is not responsible for any services carried out by independent certification bodies.

6) All users should ensure that they have the latest edition of this publication.

7) No liability shall attach to IEC or its directors, employees, servants or agents including individual experts and members of its technical committees and IEC National Committees for any personal injury, property damage or other damage of any nature whatsoever, whether direct or indirect, or for costs (including legal fees) and expenses arising out of the publication, use of, or reliance upon, this IEC Publication or any other IEC Publications.

8) Attention is drawn to the Normative references cited in this publication. Use of the referenced publications is indispensable for the correct application of this publication.

9) Attention is drawn to the possibility that some of the elements of this IEC Publication may be the subject of patent rights. IEC shall not be held responsible for identifying any or all such patent rights.

International Standard IEC 62282-3-100 has been prepared by IEC technical committee 105: Fuel cell technologies.

IEC 62282-3-100 cancels and replaces IEC 62282-3-1 published in 2007. IEC 62282-3-100 constitutes a technical revision.

IEC 62282-3-100 includes the following significant technical changes with respect to IEC 62282-3-1:

a) general reorganization of the safety requirements;

b) major changes for addressing electrical safety requirements for internal components;

c) clarifications for numerous requirements and tests, particularly the pressure leakage and strength tests;

d) expanded wind tests;

IECNORM.COM : Click to view the full PDF of IEC 62282-3-100:2012
Withdrawn

e) additional tests for condensate discharge and ventilation leakage.

The text of this standard is based on the following documents:

FDIS	Report on voting
105/371/FDIS	105/384/RVD

Full information on the voting for the approval of this standard can be found in the report on voting indicated in the above table.

This publication has been drafted in accordance with the ISO/IEC Directives, Part 2.

A list of all the parts of the IEC 62282 series, under the general title *Fuel cell technologies*, can be found on the IEC website.

The committee has decided that the contents of this publication will remain unchanged until the stability date indicated on the IEC web site under "http://webstore.iec.ch" in the data related to the specific publication. At this date, the publication will be

- reconfirmed,
- withdrawn,
- replaced by a revised edition, or
- amended.

A bilingual version of this standard may be issued at a later date.

Withdrawn
IECNORM.COM : Click to view the full PDF of IEC 62282-3-100:2012

INTRODUCTION

A typical stationary fuel cell power system is shown in Figure 1.

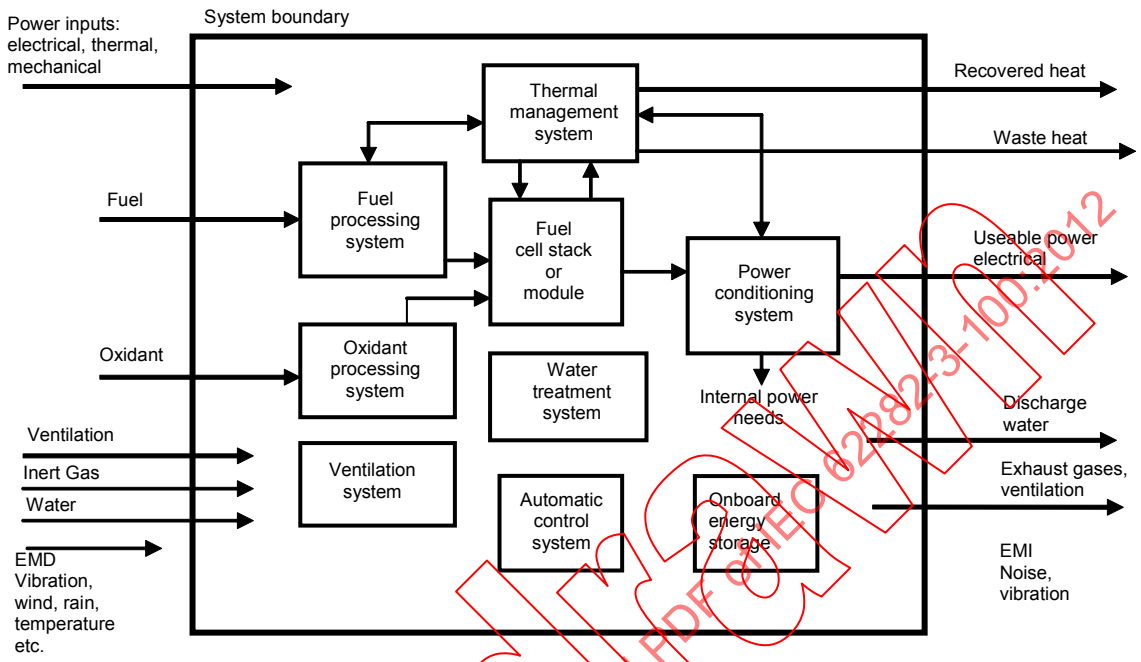

Figure 1 – Stationary fuel cell power systems

The overall design of the power system anticipated by this standard forms an assembly of integrated systems, as necessary, intended to perform designated functions, as follows.

– **Fuel processing system** – System of chemical and/or physical processing equipment plus associated heat exchanges and controls required to prepare, and if necessary, pressurize, the fuel for utilization within a fuel cell power system.

– **Oxidant processing system** – System that meters, conditions, processes and may pressurize the incoming supply for use within the fuel cell power system.

– **Thermal management system –** System that provides heating or cooling and heat rejection to maintain the fuel cell power system in the operating temperature range, and may provide for the recovery of excess heat and assist in heating the power train during start-up.

– **Water treatment system –** System that provides all the necessary purification treatment of the recovered or added water for use within the fuel cell power system.

– **Power conditioning system –** Equipment that is used to adapt the electrical energy produced by the fuel cell stack(s) to application requirements as specified by the manufacturer.

– **Automatic control system –** System(s) that is composed of sensors, actuators, valves, switches and logic components that maintain the fuel cell power system parameters within the manufacturer's specified limits including moving to safe states without manual intervention.

– **Ventilation system –** System that provides air through forced or natural means to the fuel cell power system's enclosure.

– **Fuel cell modules –** Equipment assembly of one or more fuel cell stacks which electrochemically converts chemical energy to electric energy and thermal energy intended to be integrated into a power generation system.

IECNORM.COM : Click to view the full PDF of IEC 62282-3-100:2012

– **Fuel cell stack –** Equipment assembly of cells, separators, cooling plates, manifolds and a support structure that electrochemically converts, typically, hydrogen rich gas and air reactants to DC power, heat and other reactant bi-products.

– **Onboard energy storage –** System of internal electric energy storage devices intended to aid or complement the fuel cell module in providing power to internal or external loads.

Withdrawn
IECNORM.COM : Click to view the full PDF of IEC 62282-3-100:2012

FUEL CELL TECHNOLOGIES –

Part 3-100: Stationary fuel cell power systems – Safety

1 Scope

This part of IEC 62282 applies to stationary packaged, self-contained fuel cell power systems or fuel cell power systems comprised of factory matched packages of integrated systems which generate electricity through electrochemical reactions.

This standard applies to systems

– intended for electrical connection to mains direct, or with a transfer switch, or to a stand-alone power distribution system;
– intended to provide AC or DC power;
– with or without the ability to recover useful heat;
– intended for operation on the following input fuels
  a) natural gas and other methane rich gases derived from renewable (biomass) or fossil fuel sources, for example, landfill gas, digester gas, coal mine gas;
  b) fuels derived from oil refining, for example, diesel, gasoline, kerosene, liquefied petroleum gases such as propane and butane;
  c) alcohols, esters, ethers, aldehydes, ketones, Fischer-Tropsch liquids and other suitable hydrogen-rich organic compounds derived from renewable (biomass) or fossil fuel sources, for example, methanol, ethanol, di-methyl ether, biodiesel;
  d) hydrogen, gaseous mixtures containing hydrogen gas, for example, synthesis gas, town gas.

This standard does not cover

– micro fuel cell power systems;
– portable fuel cell power systems;
– propulsion fuel cell power systems.

NOTE For special application such as “marine auxiliary power”, additional requirements may be given by the relevant marine ship register standard.

This standard is applicable to stationary fuel cell power systems intended for indoor and outdoor commercial, industrial and residential use in non-hazardous (unclassified) areas.

This standard contemplates all significant hazards, hazardous situations and events, with the exception of those associated with environmental compatibility (installation conditions), relevant to fuel cell power systems, when they are used as intended and under the conditions foreseen by the manufacturer.

This standard deals with conditions that can yield hazards on the one hand to persons, and on the other to damage outside the fuel cell system only. Protection against damage to the fuel cell system internals is not addressed in this standard, provided it does not lead to hazards outside the fuel cell system.

The requirements of this standard are not intended to constrain innovation. When considering fuels, materials, designs or constructions not specifically dealt with in this standard, these

IECNORM.COM : Click to view the full PDF of IEC 62282-3-100:2012
Withdrawn

alternatives shall be evaluated as to their ability to yield levels of safety and performance equivalent to those prescribed by this standard.

2 Normative references

The following documents, in whole or in part, are normatively referenced in this document and are indispensable for its application. For dated references, only the edition cited applies. For undated references, the latest edition of the referenced document (including any amendments) applies.

IEC 60079-0, *Explosive atmospheres – Part 0: Equipment – General requirements*

IEC 60079-2, *Explosive atmospheres – Part 2: Equipment protection by pressurized enclosure «p»*

IEC 60079-10 (all parts), *Explosive atmospheres − Part 10: Classification of areas*

IEC 60079-29-1, *Explosive atmospheres – Part 29-1: Gas detectors – Performance requirements of detectors for flammable gases*

IEC 60079-30-1, *Explosive atmospheres – Part 30-1: Electrical resistance trace heating – General and testing requirements*

IEC 60204-1, *Safety of machinery – Electrical equipment of machines – Part 1: General requirements*

IEC 60335-1:2010, *Household and similar electrical appliances – Safety – Part 1: General requirements*

IEC 60335-2-51, *Household and similar electrical appliances – Safety – Part 2-51: Particular requirements for stationary circulation pumps for heating and service water installations*

IEC 60417, *Graphical symbols for use on equipment.* Available from: <http://www.graphical-symbols.info/equipment>

IEC 60529:1989, *Degrees of protection provided by enclosures (IP Code)*

IEC 60730-1, *Automatic electrical controls for household and similar use – Part 1: General requirements*

IEC 60730-2-5, *Automatic electrical controls for household and similar use – Part 2-5: Particular requirements for automatic electrical burner control systems*

IEC 60730-2-6, *Automatic electrical controls for household and similar use – Part 2-6: Particular requirements for automatic electrical pressure sensing controls including mechanical requirements*

IEC 60730-2-9, *Automatic electrical controls for household and similar use – Part 2-9: Particular requirements for temperature sensing controls*

IEC 60950-1, *Information technology equipment – Safety – Part 1: General requirements*

IEC 61000-3-2, *Electromagnetic compatibility (EMC) – Part 3-2: Limits – Limits for harmonic currents emissions (equipment input current ≤16 A per phase)*

Withdrawn
IECNORM.COM : Click to view the full PDF of IEC 62282-3-100:2012

IEC 61000-3-3, *Electromagnetic compatibility (EMC) – Part 3-3: Limits – Limitation of voltage changes, voltage fluctuations and flicker in public low-voltage supply systems, for equipment with rated current ≤16 A per phase and not subject to conditional connection*

IEC 61000-3-4, *Electromagnetic compatibility (EMC) – Part 3-4: Limits – Limitation of emission of harmonic currents in low-voltage power supply systems for equipment with rated current greater than 16 A*

IEC 61000-3-5, *Electromagnetic compatibility (EMC) – Part 3-5: Limits – Limitation of voltage fluctuations and flicker in low-voltage power supply systems for equipment with rated current greater than 75 A*

IEC 61000-3-11, *Electromagnetic Compatibility (EMC) – Part 3-11: Limits – Limitation of voltage changes, voltage fluctuations and flicker in public low-voltage supply systems – Equipment with rated current ≤75 A and subject to conditional connection*

IEC 61000-6-1, *Electromagnetic compatibility (EMC) – Part 6-1: Generic standards – Immunity for residential, commercial and light-industrial environments*

IEC 61000-6-2, *Electromagnetic compatibility (EMC) – Part 6-2: Generic standards – Immunity for industrial environments*

IEC 61000-6-3, *Electromagnetic compatibility (EMC) – Part 6-3: Generic standards – Emission standard for residential, commercial and light-industrial environments*

IEC 61000-6-4, *Electromagnetic compatibility (EMC) – Part 6-4: Generic standards – Emission standard for industrial environments*

IEC 61508 (all parts), *Functional safety of electrical/electronic/programmable electronic safety-related systems*

IEC 62040-1, *Uninterruptible power systems (UPS) – Part 1: General and safety requirements for UPS*

IEC 62061, *Safety of machinery – Functional safety of safety-related electrical, electronic and programmable electronic control systems*

IEC/TS 62282-1, *Fuel cell technologies – Part 1: Terminology*

IEC 62282-3-200, *Fuel cell technologies – Part 3-200: Stationary fuel cell power systems – Performance test methods*

ISO 3864-2, *Graphical symbols – Safety colours and safety signs – Part 2: Design principles for product safety labels*

ISO 4413, *Hydraulic fluid power – General rules and safety requirements for systems and their components*

ISO 4414, *Pneumatic fluid power – General rules and safety requirements for systems and their components*

ISO 5388, *Stationary air compressors – Safety rules and code of practice*

ISO 7000, *Graphic symbols for use on equipment – Index and synopsis.* Available from: http://www.graphical-symbols.info/equipment.

IECNORM.COM : Click to view the full PDF of IEC 62282-3-100:2012
Withdrawn

ISO 10439, *Petroleum, chemical and gas service industries – Centrifugal compressors*

ISO 10440-1, *Petroleum, petrochemical and natural gas industries – Rotary-type positive-displacement compressors – Part 1: Process compressors*

ISO 10440-2, *Petroleum and natural gas industries – Rotary-type positive-displacement compressors – Part 2: Packaged air compressors (oil-free)*

ISO 10442, *Petroleum, chemical and gas service industries – Packaged, integrally geared centrifugal air compressors*

ISO 12499, *Industrial fans – Mechanical safety of fans – Guarding*

ISO 13631, *Petroleum and natural gas industries – Packaged reciprocating gas compressors*

ISO 13707, *Petroleum and natural gas industries – Reciprocating compressors*

ISO 13709, *Centrifugal pumps for petroleum, petrochemical and natural gas industries*

ISO 13849-1, *Safety of machinery – Safety related parts of control systems – Part 1: General principles for design*

ISO 13850, *Safety of machinery – Emergency stop – Principles for design*

ISO 14847, *Rotary positive displacement pumps – Technical requirements*

ISO 15649, *Petroleum and natural gas industries – Piping*

ISO 16111, *Transportable gas storage devices – Hydrogen absorbed in reversible metal hydride*

ISO 23550, *Safety and control devices for gas burners and gas-burning appliances – General requirements*

ISO 23551-1, *Safety and control devices for gas burners and gas-burning appliances – Particular requirements – Part 1: Automatic valves*

ISO 23553-1, *Safety and control devices for oil burners and oil-burning appliances – Particular requirements – Part 1: Shut-off devices for oil burners*

ISO 26142, *Hydrogen detection apparatus – Stationary applications*

Withdrawn
IECNORM.COM : Click to view the full PDF of IEC 62282-3-100:2012

3 Terms and definitions

For the purposes of this document, the following terms and definitions apply.

3.1
accessible
area to which, under normal operating conditions, one of the following applies:

a) access can be gained without the use of a tool;

b) the means of access is deliberately provided to the end user;

c) the end user is instructed to enter regardless of whether or not a tool is needed to gain access

Note 1 to entry: The terms "access" and "accessible", unless qualified, relate to end user access area as defined above.

Note 2 to entry: Only service technicians are allowed into non-accessible areas. Service personnel that are allowed access into non-accessible areas may need to have proper personal protective equipment as noted in the maintenance manual.

3.2
anode exhaust catalytic reactor
catalyst reactor which oxidizes hydrogen-rich gas used for hydrogen fuel cell power systems

3.3
automatic burner control system
system which monitors the operation of fuel burners. It includes a programming unit, a flame/oxidation detector and may include an ignition source and/or ignition device

3.4
burner port
any opening in a burner head through which gas or gas-air mixture is discharged for ignition

3.5
combustible materials
item capable of combustion

Note 1 to entry: Such materials shall be considered combustible even though flame-proofed, fire-retardant treated, or plastered

Note 2 to entry: When pertaining to materials adjacent to, or in contact with, heat-producing appliances, vent connectors, flue gas vents, steam and hot water pipes, and warm air ducts, those materials made of or surfaced with wood, compressed paper, plant fibres, or other materials that are capable of being ignited and burned.

3.6
design pressure
highest pressure that may occur under any and all operating modes, including steady state and transient

3.7
effluent
products of combustion plus the excess air being discharged from gas utilization equipment

3.8
electromagnetic disturbance
EMD
any electromagnetic phenomenon that may degrade the performance of a device, equipment or system, or adversely affect living or inert matter

3.9
electromagnetic interference
EMI
degradation of the performance of an equipment, transmission channel or system caused by an electromagnetic disturbance

3.10
electrical equipment
general term including material, fittings, devices appliances, fixtures, apparatus and the like used as part of, or in connection with, and electrical installation

3.11
emergency shutdown
safety shutdown
control system actions, based on process parameters, taken to stop the fuel cell power

Withdrawn
IECNORM.COM : Click to view the full PDF of IEC 62282-3-100:2012

system and all its reactions immediately to avoid equipment damage and/or personnel hazards

3.12
fuel cell
electrochemical device that converts the chemical energy of a fuel and an oxidant to electrical energy (DC power), heat and other reaction products

3.13
fuel cell power system
generator system that uses a fuel cell module(s) to generate electric power and heat

3.14
fuel compartment
cabinet compartments with internal sources of flammable gas/vapour release

3.15
flue gas vent
passageway, for conveying vent gas from gas utilization equipment or their vent connectors to the outside atmosphere (see also 3.33)

3.16
heat exchanger
vessel in which heat is transferred from one medium to another

3.17
igniter
device which utilizes electrical energy to ignite gas at a pilot burner or main burner

3.18
ignition device
device mounted on or adjacent to a burner for igniting fuel at the burner

EXAMPLE Pilot burners, spark electrodes and hot surface igniters.

3.19
ignition system timings

3.19.1
flame-establishing period
period of time between the signal to energize the fuel flow means and the signal indicating presence of the burner flame

Note 1 to entry: This may be applicable to proof of the ignition source or main burner flame, or both.

3.19.2
ignition activation period
period of time between energizing the main gas valve and deactivation of the ignition means prior to the lock-out time

3.19.3
start-up lock-out time
period of time between the initiation of gas flow and the action to shut off the gas flow in the event of failure to establish proof of the supervised ignition source or the supervised main burner flame. Re-initiating the lighting sequence requires a manual operation

Withdrawn
IECNORM.COM : Click to view the full PDF of IEC 62282-3-100:2012

3.19.4
purge time
period of time intended to allow for the dissipation of any unburned gas or residual products of combustion

3.19.4.1
pre-purge time
purge time which occurs at the beginning of a burner operating cycle prior to initiating ignition

3.19.4.2
post-purge time
purge time which occurs at the end of a burner operating cycle

3.19.5
recycle time
period of time between the signal to de-energize the gas supply following loss of the supervised ignition source or the supervised flame and the signal to begin a new start-up procedure

3.20
interlock
control to prove the physical state of a required condition and to furnish that proof to the safety related control device which performs the safety shutdown

3.21
lock-out time
period of time between the signal indicating absence of flame and the action to shut off the fuel supply

3.22
main burner
device or group of devices essentially forming an integral unit for the final conveyance of gas or a mixture of gas and air to the combustion zone, and on which combustion takes place to accomplish the function for which the equipment is designed

3.23
manifold
conduit(s) which supplies fluid to or collects it from the fuel cell or the fuel cell stack

3.24
permissive
condition within a logic sequence that must be satisfied before the sequence is allowed to proceed to the next phase

3.25
pilot
small gas flame used to ignite the gas at the main burner

3.25.1
continuous pilot
pilot that burns without turning off throughout the entire time the burner is in service, whether the main burner is firing or not

3.25.2
intermittent pilot
pilot which is automatically lit each time there is a signal for initialization and burns during the entire period that the main burner is firing

Withdrawn
IECNORM.COM : Click to view the full PDF of IEC 62282-3-100:2012

3.25.3
interrupted pilot
pilot which is automatically lit each time there is a signal for initialization. The pilot fuel is cut off automatically at the end of the main burner flame-establishing period

3.25.4
proved pilot
pilot flame supervised by a primary safety control

3.26
purge
Protective operation to remove gases and/or liquids, such as fuel, hydrogen, air or water, from a fuel cell power system

3.27
reformer
reactor to produce a hydrogen rich gas mixture from a raw fuel

3.28
specific gravity
ratio of the weight or mass of a given volume of a substance to that of an equal volume of another substance (air for gases, water for liquids and solids) used as a standard, both measured under the same conditions

3.29
state

3.29.1
cold state
state of a fuel cell power system at ambient temperature with no power input or output

3.29.2
operational state
state of a fuel cell power system with substantial electrical active output power available

3.29.3
passive state
state of the fuel cell power system when the fuel and oxidant systems have been purged with steam, air or nitrogen or per manufacturer's instructions

3.29.4
standby state
state of a fuel cell power system being at sufficient operating temperature and in such an operational mode, with zero electrical output power that the fuel cell power system is capable of being promptly switched to an operational state with substantial electrical active output power

3.29.5
storage state
state of a fuel cell power system being non-operational and possibly requiring, under conditions specified by the manufacturer, the input of thermal and/or electric energy and/or an inert atmosphere in order to prevent deterioration of the components

Withdrawn
IECNORM.COM : Click to view the full PDF of IEC 62282-3-100:2012

3.30
thermal equilibrium conditions
stable temperature conditions indicated by temperature changes of no more than 3 K (5 °F) or 1 % of the absolute operating temperature, whichever is higher between three readings 15 min apart

3.31
vent connector
that portion of the venting system which connects the flue outlet of gas utilization equipment to the flue gas vent or single-wall metal pipe

3.32
vent gases
products of combustion from gas utilization equipment plus excess air, plus dilution air in the venting system

3.33
vent terminal
vent cap
fitting at the end of the vent pipe that directs the flue products into the outside atmosphere

3.34
ventilation

3.34.1
mechanical ventilation
movement of air and its replacement with fresh air by mechanical means

3.34.2
natural ventilation
movement of air and its replacement with fresh air due to the effects of wind and/or temperature gradients

3.35
venting system
flue gas vent and vent connector if used, assembled to form a continuous open passageway from the flue collar of gas utilization equipment to the outside atmosphere for the purpose of removing vent gases

4 Safety requirements and protective measures

4.1 General safety strategy

The manufacturer shall perform in written form a risk analysis to ensure that

a) all reasonably foreseeable hazards, hazardous situations and events throughout the anticipated fuel cell power system's lifetime have been identified (see Annex A for a listing of typical hazards);

b) the risk for each of these hazards has been estimated from the combination of probability of occurrence of the hazard and of its foreseeable severity;

c) the two factors which determine each one of the estimated risks (probability and severity) have been eliminated or reduced to a level not exceeding the acceptable risk level as far as practical possible through

   1) inherently safe design of the construction and its methods; or

IECNORM.COM : Click to view the full PDF of IEC 62282-3-100:2012
Withdrawn

2) passive control of energy releases without endangering the surrounding environment (for example, burst disks, release valves, thermal cut-off devices) or by safety related control functions; and

3) for residual risks which could not have been reduced by the measures according to 1) and 2) provision of labels, warnings, or requirements of special training shall be taken, considering that such measures need to be understood by the persons who are in the area of the hazards.

For functional safety, the required severity level, performance level or the class of control function shall be determined and designed in accordance with:

- IEC 62061 (respectively ISO 13849-1) for applications according to IEC 60204-1;
- IEC 60730-1 for appliances according to IEC 60335-1;
- IEC 61508 (all parts) for other applications.

For failure mode and effects analysis (FMEA) and fault tree analysis methods the following standards can be used as guidance:

- IEC 60812;
- SAE J1739;
- IEC 61025.

4.2 Physical environment and operating conditions

4.2.1 General

The fuel cell power system and protective systems shall be so designed and constructed as to be capable of performing their intended function(s) in the physical environment and operating conditions specified in 4.2.2 to 4.2.8.

4.2.2 Electrical power input

The fuel cell power system shall be designed to operate correctly with the conditions of electrical power input specified in the relevant electrical product application standard as given in 4.7 or as otherwise specified by the manufacturer.

4.2.3 Physical environment

The manufacturer shall specify the physical environment conditions for which the fuel cell power system is suitable. Consideration should be given to:

– indoor/outdoor use;

– the altitude above sea-level up to which the fuel cell power system shall be capable of operating correctly;

– the range of air temperatures and humidity within which the fuel cell power system shall be capable of operating correctly;

– the seismic zone where it may be sited.

4.2.4 Fuel input

The fuel cell power system shall be designed to operate correctly within the composition limits and supply characteristics of the fuels for which its design is intended (for example, pipeline natural gas). In the user's manual, the manufacturer shall specify the composition limits and supply characteristics of the fuels to be used in the fuel cell power system.

4.2.5 Water input

The quality and supply characteristics of the water to be used in the fuel cell power systems shall be specified by the manufacturer.

Withdrawn
IECNORM.COM : Click to view the full PDF of IEC 62282-3-100:2012

4.2.6 Vibration, shock and bump

The undesirable effects of vibration, shock and bump (including those generated by the machine and its associated equipment and those created by the physical environment) shall be avoided by the selection of suitable equipment, by mounting it away from the fuel cell power system, or by the use of anti-vibration mountings. This does not include the effects of seismic shock, which shall be addressed separately if the manufacturer deems it appropriate for its product (see 4.2.3).

4.2.7 Handling, transportation, and storage

The fuel cell power system shall be designed to withstand, or suitable precautions shall be taken to protect against, the effects of transportation and storage temperatures within a range of –25 °C to +55 °C and for short periods not exceeding 24 h at up to +70 °C. Alternative temperature ranges may be specified by the manufacturer.

The fuel cell power system or each component part thereof shall

– be capable of being handled and transported safely, and when necessary, be provided with suitable means for handling by cranes or similar equipment,
– be packaged or designed so that it can be stored safely and without damage (for example, adequate stability, special supports, etc.).

The manufacturer shall specify special means for handling, transportation and storage if required.

4.2.8 System purging

Means shall be provided in fuel cell systems to purge where, for safety reasons, a passive state is required after shutdown or prior to start-up, as specified by the manufacturer. A suitable purge system utilizing a medium specified by the manufacturer such as, but not limited to, nitrogen, air or steam in a non-hazardous situation within the intended use may be used.

4.3 Selection of materials

4.3.1 All materials shall be suitable for the intended purpose.

4.3.2 When materials used to construct the fuel cell power system are known to pose hazards under certain circumstances, the manufacturer shall implement the measures and provide the information necessary to sufficiently minimize the risk of endangering persons' safety or health.

4.3.3 Asbestos or asbestos-containing material(s) shall not be used in the construction of a fuel cell power system. The use of other hazardous substances such as lead, cadmium, mercury, hexavalent chromium, polybrominated biphenyl, polybrominated diphenyl ether and polychlorinated biphenyl shall be addressed in accordance with national and regional regulations.

Metallic and non-metallic materials used to construct internal or external parts of the fuel cell power system, in particular those exposed directly or indirectly to moisture or that contain process gas or liquid streams, as well as all parts and materials used to seal or interconnect the same, for example, welding consumables, shall be suitable for all physical, chemical and thermal conditions which are reasonably foreseeable within the scheduled lifetime of the equipment and for all test conditions. In particular:

– they shall retain their mechanical stability with respect to strength (fatigue properties, endurance limit, creep strength) when exposed to the full range of service conditions and lifetime as specified by the manufacturer;

Withdrawn
IECNORM.COM : Click to view the full PDF of IEC 62282-3-100:2012

– they shall be sufficiently resistant to the chemical and physical action of the fluids that they contain and to environmental degradation;

– the chemical and physical properties necessary for operational safety shall not be significantly affected within the scheduled lifetime of the equipment unless replacement is foreseen;

– specifically, when selecting materials and manufacturing methods, due account shall be taken of the material's corrosion and wear resistance, electrical conductivity, impact strength, aging resistance, the effects of temperature variations, the effects arising when materials are put together (for example, galvanic corrosion), the effects of ultraviolet radiation, and to the degradation effects of hydrogen on the mechanical performance of a material.

NOTE Guidance to account for the degradation effects of hydrogen on the mechanical performance of a material can be found in ISO/TR 15916, ASME B31.12 and Annex B.

4.3.4 Where conditions of erosion, abrasion, corrosion or other chemical attack may arise, adequate measures shall be taken to

– minimize that effect by appropriate design, for example, additional thickness, or by appropriate protection, for example, use of liners, cladding materials or surface coatings, taking due account of the intended and reasonably foreseeable use;

– permit replacement of parts which are most affected;

– draw attention, in the instructions referred to in 7.4.5, to the type and frequency of inspection and maintenance measures necessary for continued safe use; where appropriate, it shall be indicated which parts are subject to wear and the criteria for replacement.

4.4 General requirements

4.4.1 In so far as their purpose allows, accessible parts of the fuel cell power system shall have no sharp edges, no sharp angles and no rough surfaces likely to cause injury.

4.4.2 The fuel cell power system, or parts of it where there is a reasonable expectation of access, shall be designed and constructed to prevent persons slipping, tripping or falling on or off these parts.

4.4.3 The fuel cell power system, components and fittings thereof shall be so designed and constructed that they are stable enough, under the foreseen operating conditions (if necessary taking climatic conditions into account) for use without risk of overturning, falling or unexpected movement. Otherwise, appropriate means of anchorage shall be incorporated and indicated in the instructions.

4.4.4 The moving parts of the fuel cell power system shall be designed, built and laid out to avoid hazards or, where hazards persist, fixed with guards or protective devices in such a way as to prevent all risk of contact which could lead to accidents.

4.4.5 The various parts of the fuel cell power system and their linkages shall be so constructed that, when used normally, no instability, distortion, breakage or wear likely to impair their safety can occur.

4.4.6 The fuel cell power system shall be so designed, constructed and/or equipped that risks due to gases, liquids, dust or vapours released during the operation or maintenance of a fuel cell power system are avoided.

4.4.7 All parts shall be securely mounted or attached and rigidly supported. The use of shock-mounts is permitted when suitable for the application.

IECNORM.COM : Click to view the full PDF of IEC 62282-3-100:2012
Withdrawn

4.4.8 All safety shutdown system components, whose failure may result in a hazardous event, as identified by the risk analysis noted in 4.1, shall be recognized, certified or separately tested for their intended usage.

4.4.9 The fuel cell power system shall be so designed, constructed and/or equipped that risks due to gases, liquids, dust or vapours released during the operation or maintenance of a fuel cell power system, or used in its construction can be avoided.

4.4.10 The manufacturer shall take steps to eliminate any risk of injury caused by contact with, or proximity to, external surfaces of the fuel cell power system enclosure, handle, grips or knobs at high temperatures.

4.4.11 If external surfaces of the fuel cell power system's enclosure, handles, grips, knobs or similar parts may be contacted by users without personal protective equipment, the manufacturer shall either limit the temperature of these surfaces at all times according to Table 1 or the manufacturer shall fix guards or protective devices in such a way as to prevent risk of contact that could lead to accidents.

Table 1 – Allowable surface temperatures rises

Part	Temperature rise °C
External enclosures, except handles held in normal use	60
Surfaces of handles, knobs, grips and similar parts which are held for short periods only in normal use – of metal	35
– of porcelain	45
– of moulded material (plastic), rubber or wood	60
NOTE 1 Maximum surface temperature rises above ambient of external surfaces that may be contacted during operation by people without personal protective equipment. The above values are referenced in Table 3 of IEC 60335-1:2010. NOTE 2 The values in the table are based on an ambient temperature not normally exceeding 25 °C but occasionally reaching 35 °C. However, the temperature rise values specified are based on 25 °C.	

The temperatures on walls, floor and ceiling adjacent to a stationary fuel cell power system shall not exceed 50 °C above ambient temperature under the test conditions of 5.12 b).

4.4.12 The fuel cell power system shall be so designed and constructed that the emission of airborne noise is reduced to a level suited for the intended use or location in compliance with applicable regional or national airborne noise codes and standards.

4.4.13 The fuel cell power system exhaust to atmosphere, under normal steady-state operating conditions, shall not contain concentrations of carbon monoxide in excess of 0,03 % by volume in an air-free sample of the effluents, which is a sample that has its effluent carbon monoxide (CO) concentration mathematically corrected as though there was zero percent excess air.

The CO concentration of the dry, air-free combustion products is given by the formula:

$$CO = (CO)_{avg} \times (CO_2)_{max} / (CO_2)_{avg}$$

where

IECNORM.COM : Click to view the full PDF of IEC 62282-3-100:2012
Withdrawn

CO	is the carbon monoxide concentration of air-free combustion products in percent;
$(CO_2)_{max}$	is the maximum carbon dioxide concentration of the dry, air-free combustion products for test fuel in percent;
$(CO)_{avg}$ and $(CO_2)_{avg}$	are the average values of measured concentrations in the sample taken at least 3 times during the test, both expressed in percent.

Or

$$CO = (CO)_{avg} \times (21) / (21 - (O_2)_{avg})$$

where

$(CO)_{avg}$ and $(O_2)_{avg}$	are the average values of measured concentrations in the sample taken at least 3 times during the test, both expressed in percent.

4.4.14 Where explosive, flammable, or toxic fluids are contained in the piping, appropriate precautions shall be taken in the design and marking of sampling and take-off points.

4.4.15 The maximum temperatures of components and materials, as installed in the fuel cell power system, shall not exceed their temperature ratings.

4.4.16 The manufacturer shall give consideration to the suitability of the fuel cell power system to operate where contaminants (for example, dust, salt, smoke, and corrosive gases) are present in the physical environment.

4.4.17 The fuel cell power system enclosure shall be designed to safely contain any anticipated hazardous liquid leaks (see 4.5.2 f) for liquid fuel). The containment means shall have a capacity of 110 % of the maximum volume of fluid anticipated to leak.

4.4.18 The manufacturer shall take measures to ensure against condensate accumulation. The manufacturer shall take measures to ensure that vent gas does not escape through condensate drain lines.

4.5 Pressure equipment and piping

4.5.1 Pressure equipment

Pressurized vessels, such as reactors, heat exchangers, gas-fired tube heaters and boilers, electric boilers, coolers, accumulators and similar containers, and associated pressure relief mechanisms, such as relief valves and similar devices, shall be constructed and marked in accordance with applicable regional or national pressure equipment codes and standards.

Vessels such as tanks and similar containers that fall outside the scope of national pressure equipment standards shall be constructed of suitable materials in accordance with 4.3 and shall meet the applicable requirements of 4.4. Such vessels, and their related joints and fittings, shall be designed and constructed with adequate strength for functionality and leakage resistance to prevent unintended releases.

Hydrogen stored in metal hydrides assemblies shall comply with ISO 16111.

4.5.2 Piping systems

Piping and its associated joints and fittings shall conform to the applicable clauses of ISO 15649.

Piping systems designed for internal gauge pressure at or above zero but less than 105 kPa, handling fluids that are non-flammable, non-toxic and not damaging to human tissue and having a design temperature from −29 °C through 186 °C are not included in the scope of ISO 15649. Piping systems under these conditions shall be constructed of suitable materials in accordance with 4.3 and shall meet the applicable requirements of 4.4. Such pipes, and

IECNORM.COM : Click to view the full PDF of IEC 62282-3-100:2012
Withdrawn

their related joints and fittings, shall be designed and constructed with adequate strength for functionality and leakage resistance to prevent unintended releases.

The design and construction of both rigid and flexible pipes and fittings shall consider the following aspects.

a) Materials shall meet the requirements specified in 4.3.

b) The internal surfaces of piping shall be thoroughly cleaned to remove loose particles and the ends of piping shall be carefully reamed to remove obstructions and burrs.

c) If fluid condensate or sediment accumulation inside gaseous fluid piping could cause damage from water hammer, vacuum collapse, corrosion and uncontrolled chemical reactions during start-up, shutdown and/or use, the manufacturer shall provide means for drainage and removal of deposits from low areas and for access during cleaning, inspection and maintenance. In particular, the manufacturer shall take measures to ensure against sediment or condensate accumulation in fuel gas controls. Sediment traps or filters shall be installed or adequate guidelines shall be provided in the product's technical documentation.

d) The manufacturer shall take measures to ensure against sediment accumulation in liquid fuel controls. Sediment traps or filters shall be installed or adequate guidelines shall be provided in the technical documentation of the product.

e) Non-metallic piping used to convey combustible gases shall be protected against the possibility of overheating and mechanical damage. Measures as required by the risk analysis specified in 4.1 shall be provided to prevent the temperature of components conveying combustible gases from surpassing their design temperatures.

f) Liquid fuel cell power systems shall include provisions for capturing, recycling or safe disposal of released liquid fuel. Drip pans, spill guards, or double-walled pipe shall be designed to prevent uncontrolled releases.

4.5.3 Flue gas venting

The fuel cell power system shall be provided with a vent system to convey products of combustion from fuel utilization equipment to the outside atmosphere. The manufacturer shall either supply a vent pipe system that meets the requirements, or provide in the product's technical documentation adequate instructions to allow selection of a vent pipe system meeting these requirements:

a) Materials shall meet the requirements specified in 4.3. In particular, the venting system shall be constructed of material resistant to corrosion by condensate. Non-metallic material shall be judged on its temperature limitation, strength and resistance to the action of condensate.

b) The venting system parts of a fuel cell power system shall be durable. Venting system parts, including parts within the fuel cell power system, shall not break, disassemble or become damaged to the extent that they permit unsafe fuel cell power system operation.

c) The vent pipe shall be properly supported and shall be provided with a rain cap or other feature that would not limit or obstruct the gas flow from venting.

d) A means, such as drainage, shall be provided to prevent water, ice and other debris from accumulating inside the vent pipe or obstructing the vent pipe.

e) A venting system for a fuel cell power system shall be leak-tight.

f) The exhaust outlet collar shall be of such size as to accommodate a vent connector that is commercially available or to accommodate a conduit as specified in the manufacturer's installation instructions.

g) Pressure switches used to prove exhaust gas flow, if used, shall be factory set, or at the manufacturer's discretion, be set by authorized personnel at the construction site. The adjustment means shall then be secured. A pressure switch shall bear a marking indicating clearly the appliance manufacturer's or distributor's part number or appropriate documentation which correlates to the locked pressure setting.

IECNORM.COM : Click to view the full PDF of IEC 62282-3-100:2012

h) Parts of a pressure switch in contact with exhaust gas condensate shall be corrosion-resistant to exhaust gas condensate at the normal operating temperatures.

i) The fuel cell power system shall be capable of starting up and then shall operate with the appropriate carbon monoxide (CO) level when the vent system is exposed to up to 116 Pa static pressure or up to 134,5 Pa velocity pressure (from 9 km/h to 54 km/h wind velocity) according to the tests in 5.13.

j) When the fuel cell power system is provided with a venting system, the temperature of the exhaust gases conveyed by that venting system shall not exceed temperatures acceptable for the materials used to construct the venting system.

k) The vent system length shall be within the limits bounded by the testing carried out in Clause 5.

4.5.4 Gas-conveying parts

The gas-conveying parts shall comply with the following condition:

– the gas passage shall be gas-tight such that the tightness shall not be undermined under ordinary transportation, installation and use.

4.6 Protection against fire or explosion hazards

4.6.1 Prevention against fire and explosion hazards in fuel cell power systems provided with cabinets

a) The integrated systems of the fuel cell power system shall be assembled so as to prevent hazards associated with flammable atmosphere accumulations within the fuel cell power system.

b) The boundary for dilution of normal internal releases to below 25 % (LFL) may be determined by computational fluid dynamic analysis, tracer gas, or similar methods, such as those given in IEC 60079-10. All devices installed within dilution boundaries shall meet the requirements specified in 4.6.1 e). The volume within dilution boundaries shall be classified according to IEC 60079-10. The LFL of typical gases are provided in IEC 60079-20.

c) Cabinet compartments with internal sources of flammable gas/vapour release are defined as fuel compartments. Fuel compartments shall be designed to

– maintain gas mixtures below 25 % (LFL), except in dilution boundaries; and

– limit the extent of dilution boundaries to within the fuel compartment.

d) Methods to maintain normal internal releases below 25 % (LFL), except in dilution boundaries, include

1) Controlled oxidation of normal internal releases

This may be accomplished by the provision of a continuous and reliable ignition and oxidant sources that ensures the combustion of the released gases or the utilization of catalytic oxidation units.

The manufacturer shall ensure that the maximum credible release, when reacted, produces pressures and temperatures that can be contained within the fuel compartment and tolerated by the components exposed to such conditions.

2) Air dilution of normal internal releases

This may be accomplished by the provision of mechanical ventilation to dilute with air the concentration of normal releases to less than 25 % (LFL), except within dilution boundaries. In all cases, the minimum ventilation rate shall be consistent with the allowable leakage rate test given in 5.4.

Ventilated fuel compartments shall be designed to operate at negative pressure relative to other types of compartments in the fuel cell power system and its surroundings. This negative pressure in the fuel compartment is established by means such as induced or exhaust ventilation. Proper operation of the ventilation system shall be confirmed by measuring either flow or pressure. Failure of ventilation shall cause a

IECNORM.COM : Click to view the full PDF of IEC 62282-3-100:2012
Withdrawn

shutdown of the process equipment. Control functions to ensure this ventilation shall be according to the standard for functional safety as given in 4.1. Alternatively, fuel compartments of fuel cell power systems need not be ventilated at negative pressures if adequate means are provided to limit the concentration of flammable gas below 25 % LFL under all conditions of use except within dilution boundaries or as described in 4.6.1 g).

Fuel compartments that rely on ventilation for protection against accumulation of flammable atmospheres shall be purged in such a way that the atmosphere will be brought below 25 % of the LFL.

NOTE 1 One method of accomplishing this is with at least four air exchanges within an appropriate time interval to ensure this result.

The purging will take place prior to the energization of any devices that are not suitable for the area classification according to 4.6.1 b). Purging is not required if the atmosphere within the compartment and associated ducts can be demonstrated by design to be non-hazardous. All devices, which shall be energized prior to purging or in order to accomplish purging, shall meet the requirements specified in 4.6.1 e).

e) Within areas classified as hazardous in 4.6.1 b), except for units that use the protection method described in 4.6.1 d) 1), the manufacturer shall eliminate ignition sources by ensuring that the

– installed electrical equipment is suitable for the area classification according to IEC 60079-0 and other applicable parts of the IEC 60079 series;

– installed electrical resistance trace heating, if available, complies with IEC 60079-30-1;

– surface temperatures do not exceed 80 % of the auto-ignition temperature, expressed in degrees Celsius, of the flammable gas or vapour. See IEC 60079-20 for guidance regarding auto-ignition temperatures of various flammable fluids;

– equipment containing materials capable of catalysing the reaction of flammable fluids with air shall be capable of suppressing the propagation of the reaction from the equipment to the surrounding flammable atmosphere;

– potential for static discharge has been eliminated by proper bonding and grounding, and by proper material selection.

f) Compartments that contain electrical or mechanical equipment shall be maintained at positive pressure relative to adjacent compartments with sources of flammable gas or vapour according to IEC 60079-2, unless the equipment meets the requirements specified in 4.6.1 e).

g) The fuel cell power system shall be provided with passive and active means, or a combination thereof, to maintain abnormal internal releases below 25 % (LFL), except in dilution boundaries.

Sudden and catastrophic failures need not be considered a release scenario in this analysis when protection against such failures has already been contemplated in the pressure equipment and piping design (see also 4.5).

“Passive” means include, but are not limited to, the mechanical limitation of releases of flammable gases or vapours to a maximum value by using pipe orifices and similar methods of flow restriction or joints permanently secured and so constructed that they limit the release rate to a predictable maximum value.

“Active” means may include flow measurements and controls or the provision of safety devices such as combustible gas sensors. These means shall meet the requirements specified in 4.9, and shall cause a fuel cell power system shutdown upon occurrence of conditions under which the concentration of any flammable gas in the ventilation exhaust exceeds 25 % of the LFL of that gas.

h) The fuel cell power system shall be designed for the safe dispersal of the ventilation and process exhaust streams. In particular, for indoor installations the ventilation and process exhaust shall be designed for connection to a flue or venting system.

i) Potential for static discharge has been eliminated by proper bonding and grounding of metallic parts by selecting materials that do not generate charges which could result in a

IECNORM.COM : Click to view the full PDF of IEC 62282-3-100:2012

spark capable to ignite an ignitable gas/air mixture. The effect of flow rates within pipes generating possible charges shall also be considered.

j) A control function whose purpose is to avoid exceeding 25 % LFL by e.g. dilution with air and/or measuring the concentration and shut-off if exceeding the limit, shall be designed according to the requirements specified in 4.1.

NOTE 2 Non-metallic tubing carrying hydrogen gas may accumulate electrostatic charge along its surface. Discharges from the surface of this tube may be sufficient to ignite a flammable mixture of gas or vapour in the surrounding environment. IEC 60079-10 addresses measures to eliminate electrostatic discharges in Zones 1 and 2. This may be achieved by specifying a tube material with sufficient conductivity, or by limiting gas flow velocity to values below which electrostatic charge does not accumulate.

NOTE 3 Metal braid coverings, or conductive wires within the non-metallic tubing wall may increase the chance of electrostatic discharge if those conductors become disconnected from their bonding conductor.

4.6.2 Prevention of fire and explosion hazards in burners

a) Fuel cell power systems shall be designed in such a way that the unsafe build-up of flammable or explosive gases in burners (start, main and auxiliary burners of a reformer section, tail gas burners) is avoided.

b) The main burner shall be fitted with a pilot or a device for direct ignition.

c) The direct ignition device shall be controlled automatically and shall not cause deterioration of the burner. Direct ignition devices shall be positively positioned with respect to the main burner ports. Means shall be provided to prevent incorrect assembly or reversible mounting of any direct ignition device in relation to the burner being served.

d) Pilots shall be controlled automatically and direct ignition shall light any pilot fuel. Pilots shall be designed and fitted in such a way that they are located correctly in relation to the burners that they ignite. When a pilot is an integral part of the start burner, it need be evaluated only under the construction and performance specifications of this standard.

e) An automatic electrical burner control system shall comply with requirements specified in 4.9.2 and shall be fitted to the burner to ensure safe start-up, operation and shutdown including lock-out if required. Flame or oxidation monitoring is an integral function of this control.

f) The main burner or pilot flame, or both, shall be supervised by a flame detector or other adequate means. If a main burner is ignited by a pilot, the presence of flame at the pilot shall be detected before gas is released to the main burner. A system having an interrupted pilot shall provide supervision of the main burner flame following the main burner flame-establishing period.

g) The supervised pilot flame shall be capable of effectively igniting the fuel at the main burner even when the fuel supply to the pilot is reduced to the point where the pilot flame is just sufficient to actuate the flame supervision according IEC 60730-2-5.

h) If the heat input of a pilot does not exceed 0,250 kW, there is no requirement for the flame establishing period.

i) If the heat input of a pilot exceeds 0,250 kW, or in case of direct ignition of the main burner, the start-up lock-out time is determined by the manufacturer so that, in accordance with the delayed ignition test (5.10.2), no health or safety hazard for the user or damage to the fuel cell power system occurs.

j) Each pilot or direct main burner ignition attempt begins with the opening of the fuel valves and ends with the closing of the fuel valves. The spark shall continue at least until ignition occurs or until the end of the flame-establishing period.

k) Pilot or direct main burner ignition shall be attempted a maximum of 3 times, each time followed by recycling of the burner control system. A higher number of attempts shall be determined by the manufacturer on the basis of a safety analysis.

An absence of flame at the end of the third attempt shall result in, at least, a lock-out.

l) In case of flame failure, the system shall cause at least re-ignition, recycling or lock-out.

m) The pilot or main burner flame failure lock-out time shall not exceed 3 s. A longer lock-out time is acceptable as determined by the manufacturer on the basis of a safety analysis.

IECNORM.COM : Click to view the full PDF of IEC 62282-3-100:2012
Withdrawn

Exception: The primary safety control need not de-energize all fuel safety valves if the temperature of the burner cavity with which the flammable air/fuel mixture is in contact, exceeds the auto ignition temperature of the fuel, measured in °C.

n) If re-ignition takes place, under the test conditions of 5.10.2, the direct ignition device shall be re-energized within a maximum time of 1 s after the disappearance of a flame signal. In this case, the flame-establishing period is the same as is used for ignition and starts when the ignition device is energized. An absence of flame at the end of the flame-establishing period shall result in, at least, a lock-out.

o) If recycling takes place, under the test conditions of 5.10.2, this shall be preceded by an interruption of the gas supply and purging; the ignition sequence shall restart from the beginning. In this case the flame-establishing period is the same as is used for ignition and starts when the ignition device is energized. Recycling shall be attempted a maximum of 3 times, each time followed by purging. An absence of flame at the end of the third attempt shall result in, at least, a lock-out.

p) An automatic electrical burner control system, as defined in IEC 60730-2-5, shall be arranged to prevent feedback by a motor, capacitor or similar device from energizing a fuel valve or ignition device after a control functions to shut off the main burner.

q) When, for safety reasons, a passive state is required prior to start-up or after shutdown, means shall be provided to automatically purge a burner housing or enclosure of any flammable gas mixture before the trial for ignition at the start and in between recycling trials. This purge shall provide a minimum of four air changes in the combustion chamber. The amount of air purged shall be monitored by a safety related control function. The level of safety shall be based on the risk analysis according to 4.1.

r) Automatic burner control system components shall be installed so the operation of these devices and main burner ignition will not be affected by falling particles or condensation during normal operation.

s) When primary air under pressure is mixed with the fuel supply, effective means shall be provided to prevent air from passing back into the fuel line, or fuel into the air supply. The fuel and air supply shall be suitably controlled to prove air flow prior to ignition and to prevent fuel from entering each reformer burner until the air supply is available and, in the event of air fan failure, to shut off the fuel supply.

t) Mechanical linkage for operating the fuel and air controls, if used, shall be designed to reliably maintain the correct fuel/air ratio and to resist accidental breakage and disengagement.

u) Upon shutdown, hazardous gases in the process system shall be safely contained, purged or reacted.

v) The manufacturer shall provide the fuel cell power system with adequate means to prevent the crossing of air into fuel or combustible process gas lines or of fuel or combustible process gas into air lines.

w) The fuel cell power system under a blocked outlet condition shall not produce a concentration of carbon monoxide in excess of 0,03 % in an air-free sample of the effluents, or as specified in national regulations, according to the test of 5.15.2.2. Additionally, the fuel cell power system shall not produce a carbon monoxide concentration in excess of 0,03 % in an air-free sample of the effluents when the air supply inlet is blocked according to the test of 5.15.2.3.

x) If the temperature of the combustion compartment and the parts of the combustion compartment directly in touch with the gas/air mixture is above the auto ignition temperature (measured in °C), flame supervision may be substituted by the temperature monitoring. If the temperature drops below the auto ignition temperature the safety shut-off valves shall be de-energized. Furthermore the release of gas flow shall only be released after the self-ignition temperature is ensured. The control function shall be based on the safety level given in IEC 60730-2-5.

IECNORM.COM : Click to view the full PDF of IEC 62282-3-100:2012
Withdrawn

4.6.3 Prevention of fire and explosion hazards in catalytic fuel oxidation systems (catalytic burners)

a) Within fuel cell power system components carrying fluids in which flammable or explosive gas volumes are intentionally produced to conduct a controlled catalytic fuel oxidation reaction (for example, catalytic partial oxidation, catalytic combustion), the manufacturer shall avoid the unsafe build-up of flammable or explosive gases.

b) When, for safety reasons, a passive state is required prior to start-up or after shutdown, means shall be provided to purge the catalytic fuel oxidation system components. The purging system may utilize a medium specified by the manufacturer such as, but not limited to, nitrogen, air or steam. The extent of purging is determined by considering flow characteristics, system dynamics and geometry. The amount of purge gas shall be monitored by a safety related control function. The level of safety shall be based on the risk analysis according to 4.1.

c) Where air is mixed with fuel, the manufacturer shall provide adequate means to prevent air from flowing back into the fuel line, or fuel into the air supply.

   1) For air-rich systems

      The fuel and air supply shall be suitably controlled to provide air prior to reaction initiation, and to prevent fuel from entering the reactor until the air supply is available.

   2) For fuel-rich systems

      The fuel and air supply shall be suitably controlled to provide fuel prior to reaction initiation, and to prevent air from entering the reactor until the fuel is available.

d) Mechanical linkage for operating the fuel and air controls, if used, shall be designed to reliably maintain the correct fuel-air ratio and to resist accidental breakage and disengagement.

e) The reaction initiation time shall be determined by considering the response time of the system control devices and the time required to build up the maximum allowable quantity of flammable or explosive mixture that can safely be contained in the system based on flow rates, fuel-air mixture flammability and system dynamics and geometry.

f) If the catalytic reaction is not established within the reaction initiation time, the system shall automatically shut off the fuel supply or, for fuel-rich operations, the supply of all reactants.

g) The temperature of the catalyst shall be monitored either directly or indirectly. The reaction fails if the temperature or rate of temperature change of the catalyst falls outside the acceptable range specified by the manufacturer. Then the system shall automatically shut off the fuel supply, or for fuel-rich operations, the supply of all reactants. The reaction failure lock-out time shall not exceed 3 s. A longer lock-out time is acceptable as determined by the manufacturer on the basis of a safety analysis.

h) If a mixture of fuel and air could potentially build up inside the fuel cell power system following either the failure of a reaction to start within the reaction initiation time, or the extinction of a reaction, or decrease or increase of the reaction rate to unsafe levels, the manufacturer shall ensure that the maximum quantity of flammable mixture that could credibly accumulate, if combusted, produces pressures and temperatures that can be contained within the components exposed to such conditions.

i) Upon shutdown, hazardous gases in the process system shall be safely contained or disposed.

j) Where air and fuel streams are put in close contact as part of the thermal management system, the manufacturer shall provide the fuel cell power system with adequate means to prevent health or safety risks from arising from the crossing of air into fuel lines or of fuel into air lines.

NOTE Subclause 4.6.3 is also applicable to anode exhaust catalytic reactor.

IECNORM.COM : Click to view the full PDF of IEC 62282-3-100:2012
Withdrawn

4.7 Electrical safety

The electric system design and construction, as well as the application of the electric and electronic equipment, including electric motors and enclosures, shall meet the requirements of relevant electrical product application standard(s). For example:

- IEC 60335-1 (e.g. residential/commercial and light industrial);
- IEC 60204-1 (e.g. large industrial);
- IEC 60950-1 (e.g. telecom);
- IEC 62040-1 (e.g. UPS).

The selection of the appropriate application will be provided in the technical specification.

The fuel cell designer shall also consider the following fuel cell specific issues:

- residual charge on the fuel cell stack;
- energy hazard between cells.

4.8 Electromagnetic compatibility (EMC)

The fuel cell power system shall not generate electromagnetic disturbances above the levels appropriate for its intended places of use. In addition, the equipment shall have an adequate level of immunity to electromagnetic disturbances so that it can operate correctly in its intended environment. As applicable, the fuel cell power system shall comply with the following standards: IEC 61000-3-2, IEC 61000-3-3, IEC 61000-3-4, IEC 61000-3-5, IEC 61000-3-11, IEC 61000-6-1, IEC 61000-6-2, IEC 61000-6-3, and IEC 61000-6-4.

4.9 Control systems and protective components

4.9.1 General requirements

4.9.1.1 The risk analysis as specified in 4.1 shall provide the basis to set the protection parameters of the safety circuit.

4.9.1.2 The fuel cell power system shall be designed in such a way that the single failure of a component does not cascade into a hazardous condition. Means to prevent cascade failures include, but are not limited to

– protective devices in the fuel cell power system (for example, interlocking guards, trip devices),
– protective interlocking of the electrical circuit,
– use of proven techniques and components,
– provision of partial or complete redundancy or diversity, and
– provision for functional tests.

The evaluation of the required measures to avoid and/or control failures if they occur are given in the application relevant control standards as shown in 4.1.

4.9.2 Control systems

4.9.2.1 General requirements

Automatic electrical and electronic controls of fuel cell power systems shall be designed and constructed so that they are safe and reliable. Residential, commercial and light industrial fuel cell power systems shall conform to IEC 60730-1.

Automatic electrical burner control systems shall comply with IEC 60730-2-5.

Withdrawn
IECNORM.COM : Click to view the full PDF of IEC 62282-3-100:2012

Automatic electrical control systems for catalytic oxidation reactors shall comply as applicable with IEC 60730-2-5. Specific requirements are provided in 4.6.3.

Manual controls shall be clearly marked and designed to prevent inadvertent adjustment and activation.

In particular, the following requirements apply.

4.9.2.2 Start

The start of an operation shall be possible only when all the safeguards are in place and are functional.

Suitable interlocks shall be provided to secure correct sequential starting.

It shall be possible for automated plant functioning in automatic mode to be restarted after a stoppage only after the safety conditions have been fulfilled. It shall also be possible to restart the fuel cell power system by intentional actuation of a control provided for the purpose, provided such restarting is verifiably non-hazardous.

This requirement does not apply to the restarting of the fuel cell power system resulting from the normal sequence of an automatic cycle.

4.9.2.3 Shutdowns

As determined by the risk analysis indicated in 4.1, the functional requirements of the fuel cell power system shall be provided with the following shutdowns:

– Emergency shutdowns

  An emergency shutdown is, for air-rich operation, the de-energization of the main fuel flow means, or for fuel-rich operation, the de-energization of both the process air flow and the main fuel flow means, as the result of the action of a limiter, a cut-out or the detection of an internal fault of the system.

– Normal shutdown

  A normal shutdown is, for air-rich operation, the de-energization of the main fuel flow means, or for fuel-rich operation, the de-energization of both the process air flow and the main fuel flow means, as the result of the opening of a control loop by a control device such as a thermostat. The system returns to the start position.

4.9.2.3.1 Emergency shutdowns

a) General

  Emergency shutdowns shall be incorporated as part of the fuel cell power system in order to avert actual or impending danger that cannot be corrected by controls. These functions shall

  – stop the dangerous condition without creating additional hazards,
  – trigger or permit the triggering of certain safeguard actions where necessary,
  – override all other functions and operations in all modes,
  – prevent reset from initiating a restart,
  – be fitted with restart lock-outs in such a way that a new start command may take effect on normal operation only after the restart lock-outs have been intentionally reset.

b) Emergency stop

  Manual emergency shutdowns (i.e. emergency stops), if required by the risk analysis in 4.1 shall have clearly identifiable, clearly visible and quickly accessible controls in accordance with ISO 13850.

Withdrawn
IECNORM.COM : Click to view the full PDF of IEC 62282-3-100:2012

c) Control functions in the event of control systems failure

In case of fault in the control system logic or failure of, or damage to, the control system hardware

– the fuel cell power system shall not be prevented from stopping once the stop command has been given,

– automatic or manual stopping of the moving parts shall be unimpeded,

– the protection devices shall remain fully effective,

– the fuel cell power system shall not restart unexpectedly.

When a protective device or interlock causes a safety shutdown of the fuel cell power system, that condition shall be signalled to the logic of the control system. The reset of the shutdown function shall not initiate any hazardous condition. Control/monitoring systems that can operate safely in the hazardous situation may be left energized to provide system information.

4.9.2.3.2 Normal shutdown

Upset conditions that can be safely controlled or that do not pose immediate danger may be corrected with a normal shutdown. A normal shutdown may remove all power to the equipment, or may leave power available to the fuel cell power system actuators.

4.9.2.4 Permissives

Permissives shall be implemented consistent with requirements established from the risk analysis described in 4.1.

4.9.2.5 Complex installations

When the fuel cell power system is designed to work together with other equipment, the fuel cell power system shutdown function, including the emergency stop, shall be provided with means, such as signal interfaces, to enable the coordinated shutdown with equipment upstream and/or downstream, as applicable, of the fuel cell power system if continued operation can be dangerous.

4.9.2.6 Operating modes

a) Fuel cell power systems operating modes include:

- an operational state (substantial electrical output power); and
- a standby state (zero net power output).

Non-operating modes can include:

- cold state;
- passive state; and
- storage state.

b) There shall be two primary transitions: start-up and shutdown:

- start-up is the transition from NON-OPERATING to OPERATING MODE and shall be initiated from an external signal;
- shutdown is the automatic transition from OPERATING to NON-OPERATING MODE. It may be initiated either via an external signal, or internal signal in response to out of limits conditions to the fuel cell power system controller.

c) Secondary operating modes and transitions may be provided as necessary, such as to allow for different power output rates or for adjustment, maintenance or inspection activities.

d) Mode selection

If the fuel cell power system has been designed and built to allow for its use in several control or operating modes presenting different safety levels (for example, to allow for

IECNORM.COM : Click to view the full PDF of IEC 62282-3-100:2012
Withdrawn

adjustment, maintenance, inspection, etc.), it shall be capable of mode selection that can be secured in each position. Each position of the selector shall correspond to a single operating or control mode and shall be fitted with restart lock-outs. A new start command may take effect on normal operation only after the restart lock-outs have been intentionally reset. Mode selection shall be allowed by any securable means, such as a positioning knob, key lock, or software command, to prevent unintentional change to a different mode that may lead to a hazardous condition. The selector may be designed to restrict user access to certain fuel cell power system operating modes (for example, access codes for certain numerically controlled functions, etc.).

e) The mode selected shall override all other control systems with the exception of the safety shutdowns.

4.9.2.7 Remote monitoring and control systems

Fuel cell power systems that can be operated remotely shall have a local, labelled switch or other means to disconnect the fuel cell power system from remote signals that may be used while a local operator performs inspection or maintenance. Remote monitoring and control systems shall

a) be allowed on fuel cell power systems only where remote control will not lead to an unsafe condition,

b) not override locally set protective safety controls.

4.9.3 Protective components

4.9.3.1 General

Suitable protective devices, and combinations thereof, comprise

– adequate monitoring devices such as indicators and/or alarms which enable adequate action to be taken either automatically or manually to keep the fuel cell power system within the allowable limits.

Protective devices shall

– be so designed and constructed so as to be reliable and suitable for their intended duty and take into account the maintenance and testing requirements of the devices, where applicable;

– have their protective functions independent of other possible functions;

– comply with appropriate design principles in order to obtain suitable and reliable protection. These principles include, in particular, fail-safe modes, redundancy, diversity and self-diagnosis.

Dangerous overloading of equipment shall be prevented at the design stage by means of integrated measurement, regulation and control devices, such as over-current cut-off switches, temperature limiters, differential pressure switches, flow-meters, time-lag relays, over-speed monitors and/or similar types of monitoring devices.

Protective devices with a measuring function shall be designed and constructed so that they can cope with foreseeable operating requirements and special conditions of use. Where necessary, it shall be possible to check the reading accuracy and serviceability of devices. These devices shall incorporate a safety factor that ensures that the alarm threshold lies far enough outside the limits to be registered, taking into account, in particular, the operating conditions of the installation and possible aberrations in the measuring system. If the protective control consists of electronic components then the control shall be designed according to the requirements specified in 4.1.

4.9.3.2 Type of components

a) Pressure limiting devices, such as pressure switches, shall comply with IEC 60730-2-6.

IECNORM.COM : Click to view the full PDF of IEC 62282-3-100:2012
Withdrawn

b) Temperature monitoring devices shall have an adequately safe response time, consistent with the measurement function, according to IEC 60730-2-9.

c) A fuel cell power system may elect to use a gas detector as a protective component to mitigate against possible gas leakage. A gas detector, if used in the fuel cell power system, shall comply with ISO 26142 or IEC 60079-29-1, as appropriate.

d) A gas sensor control loop (sensing element, electronic circuit, shut-off of the fuel supply) shall be fail safe and designed according to the requirements in 4.1.

e) All parts of fuel cell power systems which are set or adjusted at the stage of manufacture, and which should not be manipulated by the user or the installer, shall be appropriately protected.

f) Levers and other controlling and setting devices shall be clearly marked and given appropriate instructions so as to prevent any error in handling. Their design shall be such as to preclude accidental manipulation.

4.10 Pneumatic and hydraulic powered equipment

Pneumatic and hydraulic equipment of fuel cell power systems shall be designed according to ISO 4414 and ISO 4413.

4.11 Valves

4.11.1 Shut-off valves

a) Shut-off valves shall be provided for all equipment and systems where containment or blockage of the process fluid flow is necessary during shutdown, testing, maintenance, upset, or emergency conditions.

b) Shut-off valves shall be rated for the service pressure, temperature, and fluid characteristics.

c) Actuators mounted on shut-off valves shall be temperature-rated to withstand the local ambient temperature and additional heat conducted from the valve body.

d) Electrically, hydraulically or pneumatically operated shut-off valves shall be of a type that will move to a failsafe position upon loss of actuation energy.

4.11.2 Fuel valves

Supply fuel valves shall meet the following requirements:

a) All fuel supplied to the fuel cell power system shall pass through at least two automatic valves, in series, each of which serves as a safety shut-off valve and may serve as an operating control valve.

b) Any fuel supplied directly to fuel-fired equipment, such as a start-up boiler or a reformer start burner, shall also pass through at least two automatic valves, in series, each of which serves as an operating valve and a safety shut-off valve. These valves may or may not be contained in a single control body.

c) Electrically operated supply fuel valves shall meet the requirements of ISO 23551-1 or ISO 23553-1 as applicable.

d) When fuel gases are recycled from appliances using the fuel cell power system output gas, the connection may be exempt from employing shut-off valves if demonstrated to be safe according to the risk analysis of 4.1.

e) Flammable gaseous manual shut-off valves shall be suitable for their intended application based on ISO 23550.

IECNORM.COM : Click to view the full PDF of IEC 62282-3-100:2012
Withdrawn

4.12 Rotating equipment

4.12.1 General requirements

a) Rotating equipment shall be designed for the pressures, temperatures and fluids to which they may be subjected under normal operating conditions.

b) Fluid inlet and outlet lines shall be adequately protected from damage due to vibration.

c) Shaft seals shall be compatible with the pumped fluids and the operating temperatures and pressures expected in normal and abnormal operation and during normal and emergency shutdowns.

d) Shaft seals shall be designed such that hazardous fluid leakage is avoided. If shaft seals leak hazardous fluids, the manufacturer shall provide hazardous fluid containment or dilution means as necessary to avoid risks to health or safety.

e) Motors, bearings, and seals shall be suitable for the expected duty cycles.

4.12.2 Compressors

4.12.2.1 Where appropriate, packaged compressors shall conform to one of the following standards: ISO 5388; ISO 10439; ISO 10442; ISO 13707; ISO 10440-1; ISO 10440-2 or ISO 13631.

4.12.2.2 Unless considered unnecessary by the risk analysis in 4.1, compressors, or compressor systems, shall be provided with the following:

a) Pressure-relief devices that limit each stage pressure for the compression cylinder and piping associated with that stage of compression.

   This requirement is only applicable when the compression equipment is capable of generating pressure that exceeds the design pressure.

b) An automatic shutdown control for high discharge and low suction pressure.

c) Where required to restart the compressor after shutdown, an unloading device that captures and recycles blow-down gas for re-use, and/or safe venting.

d) A pressure-limiting device to avoid over pressurization at the inlet.

4.12.2.3 Compressors excluded from the scope of the standards referenced in 4.12.2.1 due to small capacity or low discharge pressure need only comply with the requirements specified in 4.12.2.2.

Packaged low-discharge pressure compressors (fans and blowers) shall be guarded according to ISO 12499 (see also 4.4.4).

4.12.3 Pumps

4.12.3.1 Packaged electric pumps for process liquids shall conform to ISO 13709 or ISO 14847, if applicable.

Packaged electric pumps for water shall conform to IEC 60335-2-51, if applicable.

4.12.3.2 Electric pumps, or electric pump systems, shall be provided with the following:

a) Pressure-relief devices that limit both inlet and outlet pressure to less than the design pressure of the piping. If the shut-off head of the electric pump is less than the pressure rating of the piping, relief valves are not required.

b) An automatic shutdown control for high discharge pressure.

4.12.3.3 Pumps excluded from the scope of the standards referenced in 4.12.3.1 due to small capacity or low discharge pressure shall comply with the requirements specified in 4.12.3.2 and in 4.7.

IECNORM.COM : Click to view the full PDF of IEC 62282-3-100:2012
Withdrawn

4.13 Cabinets

4.13.1 Fuel cell power system cabinets shall have sufficient strength, rigidity, durability, resistance to corrosion and other physical properties to support and protect all fuel cell power system components and piping; in addition, to meet the requirements of storage, transport, installation, and final location conditions.

4.13.2 Fuel cell power system cabinets intended for use indoors or under conditions of weather-protected outdoor locations shall be designed and tested so as to meet a minimum IP20 rating according to IEC 60529.

4.13.3 The fuel cell power system intended for use outdoors shall be designed and tested so as to meet a minimum IP23 rating.

4.13.4 Ventilation openings shall be so designed that they will not become obstructed during normal operation either by dust, snow or vegetation in accordance with the expected application.

4.13.5 All materials used to construct cabinets, including joints, vents, and gaskets of doors shall be capable of withstanding the physical, chemical and thermal conditions that are reasonably foreseeable throughout the fuel cell power system life.

4.13.6 Access panels, covers or insulation that need to be removed for normal servicing and accessibility shall be designed such that repeated removal and replacement will not cause damage or impair insulating value.

4.13.7 Access panels, covers or insulation that need to be removed for normal servicing and accessibility shall not be interchangeable if that interchange may lead to an unsafe condition.

4.13.8 Any access panel, cover or door that is intended to protect equipment from entry by users or untrained personnel shall have means for retaining it in place and shall require the use of a tool, key or similar mechanical means to open. For residential units, this shall include all access panels, covers or doors.

4.13.9 Means shall be provided to drain collected liquids and to pipe them to the exterior for disposal or redirect them to processes associated with the fuel cell power system.

4.13.10 Where personnel can fully enter the cabinet, access procedures shall be provided in the product's technical documentation.

4.14 Thermal insulating materials

Insulation systems employed in the fuel cell power system shall be designed to attain:

– chemical compatibility with the metals being insulated, the atmosphere and temperatures to which the systems will be exposed, and the various components of the insulation system itself;
– protection of insulation systems from expected thermal and mechanical abuse (including damage by atmospheric conditions);
– fire safety, by limiting surface temperatures of heat-producing objects to prevent the ignition of materials in proximity to them;
– future accessibility of piping, fittings, etc. for maintenance purposes.

In particular, thermal insulating materials and their internal bonding or adhesive attachment means mounted on components of the fuel cell power system shall

– be mechanically or adhesively retained in place and shall be protected against displacement or damage from anticipated loads and service operation;

IECNORM.COM : Click to view the full PDF of IEC 62282-3-100:2012
Withdrawn

– withstand all air velocities, temperatures and fluids to which they may be subjected in normal operation.

If necessary, to avoid hazards to health and safety, the manufacturer shall specify in the maintenance manual the thermal insulation system inspection and safety requirements.

4.15 Utilities

4.15.1 General requirements

The fuel cell power system shall be designed and constructed such that in the case of the loss of the utility supply the system will not cause

a) any health, safety or environmental hazards, or

b) permanent damage to the system.

4.15.2 Water supply

a) Where the fuel cell power system requires water to operate, it shall be provided through a connection to an on-site water supply in accordance with local regulations, or through a self-contained water source; alternatively, it shall be shown to produce water in sufficient quantities during operation.

b) Process water shall be prevented from contaminating potable water sources in accordance with local regulations.

c) If applicable, means shall be provided to prevent backflow of steam into the water treatment system of the fuel cell power system. A suitable check valve or equivalent device meets the intent of this provision.

4.15.3 Fuel gas supply

If applicable, means shall be provided to prevent backflow of processed fuel gas and/or purge gasses into the fuel source.

4.15.4 Electrical connections

4.15.4.1 Service receptacle

A service receptacle outlet, or lighting circuit, not under control of a disconnecting means may be part of the fuel cell power system, provided:

1) the voltage does not exceed nominal domestic mains voltage;

2) the receptacle is earthed;

3) the receptacle is so located as not to constitute a hazard when servicing the fuel cell power system; and

4) a suitable marking indicating the voltage and current limitation of the receptacle is located adjacent to the receptacle.

4.15.4.2 Disconnection from the mains supply

4.15.4.2.1 Lock-outs

Any electrical disconnection devices provided to shut power down for the safety of service personnel shall be provided with a means for physically locking-out the disconnection device to prevent inadvertent reconnection before servicing has been completed.

NOTE Instructions can be provided to allow servicing parts of the equipment with or without opening the disconnection device.

Withdrawn
IECNORM.COM : Click to view the full PDF of IEC 62282-3-100:2012

4.15.4.2.2 Disconnection devices

Disconnection devices shall be provided to disconnect the fuel cell generator from the AC or DC supplies for servicing by qualified personnel. The means of isolation can be located either in the service access area or external to the equipment. The disconnection shall be suitable for the overvoltage category of the intended application. If a disconnection device is incorporated in the equipment, it shall be connected as closely as practicable to the incoming supply. Functional switches are permitted as disconnection devices, provided that they comply with all the requirements for such devices. For stationary fuel cell systems, the disconnection device shall be incorporated in the equipment, unless the equipment is accompanied by installation instructions stating that an appropriate disconnection device shall be provided external to the equipment.

4.15.4.2.3 Parts which remain energized

Parts on the supply side of a disconnection device in the equipment which remain energized when the disconnection device is switched off shall be guarded and labelled so as to reduce the likelihood of accidental contact by a service person.

4.15.4.2.4 Disconnect operation

If the operating means of the disconnection device is operated vertically rather than rotationally, or horizontally, the “UP” position of the operating means shall be in the “ON” position.

4.15.4.2.5 Three-phase equipment

For three-phase equipment, the disconnection device shall disconnect simultaneously all line conductors of the AC mains supply. For equipment requiring a neutral connection to a power distribution system, the disconnection device shall be a four-pole device and shall disconnect all line conductors and the neutral conductor. If this four-pole device is not provided in the equipment, the installation instructions shall specify the need for the provision of the device external to the equipment. If a disconnection device interrupts the neutral conductor, it shall simultaneously interrupt all line conductors.

4.15.4.2.6 Single-phase and DC equipment

A disconnection device, if provided in or as part of the equipment, shall disconnect both poles simultaneously, except that

a) if it is possible to rely on the identification of the earthed conductor in the DC mains supply, or an earthed neutral in an AC mains supply, it is permitted to use a single-pole disconnection device that disconnects the unearthed (line) conductor, or

b) if it is not possible to rely on the identification of the earthed conductor in the DC mains supply, or an earthed neutral in an AC mains supply, and the equipment is not provided with a two-pole disconnection device, the installation instructions shall specify that a two-pole disconnection device is to be provided external to the equipment.

4.15.4.3 Safety shutdowns – Emergency stop

Manual safety shutdowns (i.e. emergency stops), if required by the risk analysis in 4.1, shall have clearly identifiable, clearly visible and quickly accessible controls such as buttons, in accordance with ISO 13850. If the fuel cell generator is provided with an integral single emergency stop device, or terminals for connection for a remote emergency stop device, the circuit shall prevent further power supply export in any mode of operation. If reliance is placed on additional disconnection of power supplies in the building wiring, the installation instructions shall state this. Plug-connected fuel cell generators do not require an emergency switching device if the plug can perform the same function.

IECNORM.COM : Click to view the full PDF of IEC 62282-3-100:2012
Withdrawn

4.16 Installation and maintenance

4.16.1 Installation

The manufacturer shall provide instructions for the proper installation, adjustment, operation, and maintenance of the fuel cell power systems.

Errors likely to be made when fitting or refitting certain parts which could be a source of risk shall be minimized by the design of such parts or, failing this, by information given on the parts themselves and/or the housings. The same information shall be given on moving parts and/or their housings where the direction of movement shall be known to avoid a risk. Any further information that may be necessary shall be given in the instructions.

Where a faulty connection can be the source of risk, incorrect connections shall be minimized by design or, failing this, by information given on the pipes, cables, etc. and/or connector blocks.

4.16.2 Maintenance

a) Adjustment, lubrication and maintenance points shall be located outside zones in which a person is exposed to risk of injury or damage to health; or maintenance instructions shall be provided in the product's maintenance manual specified in 7.4.5, as necessary to avoid risks to health or safety.

b) It shall be possible to carry out adjustment, maintenance, repair, cleaning and servicing operations while the fuel cell power system is at a standstill. When adjustment, maintenance, repair, cleaning and servicing is to be conducted while the fuel cell power system is operating, the fuel cell power system shall be designed so that those functions can be performed without the risk of injury.

c) Automated fuel cell power system components that have to be changed frequently shall be capable of being removed and replaced in without the risk of injury. Access to the components shall enable these tasks to be carried out with the necessary technical means (tools, measuring instruments, etc.) in accordance with the product's technical documentation.

d) Where, for protection of health, safety instructions or diagrams are to be adhered to the fuel cell power system, they shall be displayed using a permanent method, resistant to, or protected from, the environmental conditions of use.

5 Type tests

5.1 General requirements

A sample, representative of production, shall be examined for compliance with this standard.

Each new design shall be subjected to the type tests. Components making up the system that have been pre-certified do not need to be re-tested when applied within their rating and listing requirements.

In order to obtain the required operating conditions, type tests shall be performed in a test environment simulating that for which the fuel cell system is designed. In particular, the test environment shall provide interfaces at boundary limits according to the designed application of the fuel cell power system (see Figure 1). It is recommended that the type tests be performed in the order described below. The type test under abnormal conditions may be destructive.

Test measurements shall be converted to the following reference conditions:

– temperature (15 °C);

– pressure (101,325 kPa).

IECNORM.COM : Click to view the full PDF of IEC 62282-3-100:2012

5.1.1 Operating parameters for tests

5.1.1.1 Unless there are specific test conditions called for elsewhere in the standard, test conditions shall be formulated from the most unfavourable combination of the manufacturer's operating specifications and the parameters set out below:

a) supply voltage;

b) supply frequency;

c) physical location of equipment and position of movable parts;

d) operating mode;

e) adjustment of thermostats, regulating devices or similar controls in end user access areas, which are

   1) adjustable without the use of a tool, or

   2) adjustable using a means, such as a key or a tool, deliberately provided for the end user.

5.1.1.2 Except where otherwise stated in the particular clauses, measurements shall be carried out with the maximum uncertainties indicated below:

a)	atmospheric pressure (Pa)	(0,5 kPa);
b)	combustion chamber and test flue pressure	± 5 % full scale or (50 Pa);
c)	gas pressure (Pa)	± 2 % full scale;
d)	water-side pressure loss (Pa)	± 5 %;
e)	water rate (l/h, m^3/h)	± 2 %;
f)	gas rate (m^3/h)	± 2 %;
g)	air rate (m^3/h)	± 2 %;
h)	time (h)	
	– for ignition timings	± 0,2 s;
	– for all other timings	± 0,1 %;
i)	auxiliary electrical energy/performance kWh or kW	± 2 %;
j)	temperatures: °C or K	
	– ambient	± 1 K;
	– water	± 2 K;
	– combustion products	± 5 K;
	– fuel gas	± 1 K at $T < 100$ °C;
		± 1 % of reading in °C: $100 \leq T < 300$ °C;
		± 5 % of reading in °C: $T \geq 300$ °C;
	– surface	± 5 K;
k)	CO, CO2 and O2 for the calculation of flue losses	± 6 % of reading;
l)	gas calorific value in kWh/m^3	± 1 %;
m)	gas density in kg/m^3	± 1%;
n)	mass in kg	± 1%;
o)	torque in Nm	± 10 %;
p)	force in N	± 10 %;

Withdrawn
IECNORM.COM : Click to view the full PDF of IEC 62282-3-100:2012

q) current in A ± 1 %;

r) voltage in V ± 1 %;

s) electrical power in W, kW ± 2 %.

The full range of the measuring apparatus is chosen to be suitable for maximum anticipated value.

For the determination of the leakage rate, a method is used which gives such accuracy that the error in its determination does not exceed 2 % of related volume per hour.

The measurement uncertainties indicated concern individual measurements. For measurements requiring a combination of individual measurements (for example, efficiency measurements), the lower uncertainties associated with individual measurements may be necessary to limit the total uncertainty.

5.1.1.3 Normal operating voltages

Operating voltages are determined by the manufacturer's specifications.

5.2 Test fuels

5.2.1 A fuel cell power system intended for use with natural gas shall have the tests specified herein conducted with a gas whose composition and supply pressures reflect that of commercially available natural gas at the maximum and minimum expected gas pressure. If required by the country of destination, the following tests shall also be conducted with limit gases:

– burner operating characteristics (5.9);
– effective ignition (5.10.2.2);
– ignition – voltage variation (5.10.2.3);
– recycling/spark restoration (5.10.2.6);
– pilot flame reduction (5.10.2.7);
– delayed ignition (5.10.2.8).

5.2.2 A fuel cell power system intended for use with liquefied petroleum gases shall have the tests specified herein conducted with a gas whose composition and supply pressures reflects that of commercially available liquefied petroleum gas at the maximum and minimum expected gas pressure. If required by the country of destination, the following tests shall also be conducted with limit gas n-butane:

– burner operating characteristics (5.9);
– effective ignition (5.10.2.2);
– ignition – voltage variation (5.10.2.3);
– recycling/spark restoration (5.10.2.6);
– pilot flame reduction (5.10.2.7);
– delayed ignition (5.10.2.8).

5.2.3 A fuel cell power system intended for use with other type of fuel(s) (see Clause 1) shall be tested with test fuel(s) of composition and supply characteristics representative of the fuel(s). If the fuel has a range of composition, the following tests shall be conducted at the extremes of the composition range:

– burner operating characteristics (5.9);
– effective ignition (5.10.2.2);

IECNORM.COM : Click to view the full PDF of IEC 62282-3-100:2012
Withdrawn

– ignition – voltage variation (5.10.2.3);
– recycling/spark restoration (5.10.2.6);
– pilot flame reduction (5.10.2.7);
– delayed ignition (5.10.2.8).

5.3 Basic test arrangements

When the tests are conducted, the entire fuel cell power system, including any air filters, start-up devices, venting or exhaust systems and all field furnished equipment shall be installed and operated in accordance with the manufacturer's instructions.

Unless otherwise stated, the fuel cell power system shall be operated

a) with the inlet supply pressure as defined in 5.2;
b) within ± 5 % of the rated voltage and frequency, and within ± 10 % of the rated power output as specified by the manufacturer;
c) within ± 5 % of the rated fuel consumption when operated at rated conditions;
d) at ambient temperature and pressure which do not degrade the results of the tests.

Testing shall commence when the fuel cell power system components are at equilibrium temperature, unless otherwise specified.

5.4 Leakage tests

5.4.1 General

The procedures in 5.4 shall be performed twice, prior to and following the conduction of, all non-destructive tests specified in 5.7 through to 5.21.

5.4.2 Pneumatic leakage tests

5.4.2.1 General

Portions of the fuel cell power system subject to this test shall not leak externally in excess of the limit specified below when tested with appropriate gases or vapors (for example, the nominal operating gases, clean dry air or inert gas as specified by the manufacturer) that correlate with the expected constituents during operation and shutdown.

Prior to conducting this test, it shall be established which components are subject to the same internal pressure during normal operation of the fuel cell power system. These components shall comprise an individual test section which shall then be pressurized separately and, when deemed necessary, isolated from the rest of the fuel cell power system by any convenient means.

A suitable pressurizing system, capable of supplying the gaseous medium at the required test pressure, and a suitable flow-measuring device, capable of measuring the leakage rate with an accuracy of 2 %, shall be connected to the inlet of a test section. The flow measuring device shall be located between the pressuring system and the test section to be pressurized. The outlet of the test section shall be sealed by any convenient means. All functional parts shall be caused to assume their open position so that the required test pressure is exerted on all parts of the test section.

The gaseous medium shall be gradually admitted to the test section so that a uniform gauge pressure of not less than the pressure stipulated in Table 2 is attained gradually in approximately 1 min. This pressure shall be maintained for at least 1 min, or greater as appropriate, at which time any leakage, as indicated by the flow-measuring device, shall be noted.

Withdrawn
IECNORM.COM : Click to view the full PDF of IEC 62282-3-100:2012

5.4.2.2 Test method 1

If natural ventilation is used to compensate for fuel leakage, the allowable leakage shall be determined by means of a gas detector to ensure that area concentration does not exceed the 25 % of the lower flammability limit (LFL) in an unclassified zone as defined by 4.6.

5.4.2.3 Test method 2

If mechanical ventilation is used to compensate for fuel leakage, the allowable leakage rate is determined by the formula:

$$L = 0{,}01 \times (V/R)$$

where

L is the allowable leakage rate, in cubic meters per hour, for each part or all parts respectively;

$R = (TGSG/FGSG)^{1/2}$, where $TGSG$ is the test gas specific gravity and $FGSG$ is the fuel gas specific gravity;

or

$R = (\mu_{test}/\mu_{fuel})$ where μ_{test} is the test gas absolute viscosity and μ_{fuel} is the fuel gas absolute viscosity;

The R value that results in the lower allowable leakage rate shall be reported.

V is the minimum ventilation rate, in cubic meters per hour of air.

A correction factor may be used when fuel gas of less than 100 % flammables is used.

$$L = 0{,}01 \times (V/R) \times (1/C)$$

where C is the concentration of combustibles.

Withdrawn
IECNORM.COM : Click to view the full PDF of IEC 62282-3-100:2012

Table 2 – Leakage test requirements [a, d, e]

Hazard	Test type	System design conditions	Test parameters	Pass/fail criteria
Flammable	Hydrostatic[b]	All pressures	1,5 times design pressure	No leakage as defined in 5.4.3
	Pneumatic[c]	All pressures	1,1 times design pressure	No bubbles using an industry accepted leakage detection fluid
				5.4.2.2 Test method 1
				5.4.2.3 Test method 2
Toxic (e.g. carbon monoxide)	Hydrostatic[b]	≥ 100 kPa	1,5 times design pressure	No leakage as defined in 5.4.3
		< 100 kPa	1,0 times design pressure	No leakage as defined in 5.4.3
	Pneumatic[c]	All pressures	1,1 times design pressure	No bubbles using an industry accepted leakage detection fluid
				5.4.2.2 Test method 1
				5.4.2.3 Test method 2
				Acceptable leakage as defined in 5.20
Thermal-Burn hazard	Gas (e.g. air and exhaust)	≥ 300 °C	During fuel cell power system operation	Ambient temperature adjacent to the piping system and or the piping insulation cannot exceed 300 °C. Can be conducted concurrently with test in 5.13
		< 300 °C	No requirement	No requirement
	Liquid (e.g. coolants)	≥1,1 MPa or ≥ 120 °C	1,5 times design pressure for hydrostatic	No leakage as defined in 5.4.3
			1,1 times design pressure for pneumatic	No bubbles using an industry accepted leakage detection fluid
		< 1,1 MPa and < 120 °C	1,0 times design pressure for hydrostatic	No leakage as defined in 5.4.3
			1,0 times design pressure for pneumatic	No bubbles using an industry accepted leakage detection fluid

[a] The test pressure at any point in the piping system shall not exceed the maximum allowable test pressure of any non-isolated components, such as vessels, pumps, or valves. The pressure shall be continuously maintained for a minimum of 10 min and may then be reduced to the design pressure and held for such time as may be necessary to conduct the examinations for leakage.

[b] Pneumatic testing may alternately be used assuming component compatibility and the concurrence of the certifying body.

[c] Hydrostatic testing may alternately be used assuming component compatibility and the concurrence of the certifying body.

[d] The design pressure is the highest pressure that may occur under any and all operating modes, including steady state and transient.

[e] If a system is tested in sections, the summation of the leakage of all sections shall not exceed the leakage requirements of this table.

5.4.3 Hydrostatic leakage tests

Portions of the fuel cell power system subject to this test shall not leak externally.

The test fluid shall be the design liquid. If the manufacturer considers that testing with the design liquid is impractical, then the test liquid shall be water. If there is the possibility of damage due to freezing or to adverse effects of water on the piping system, another suitable non-toxic liquid may be used. If the liquid is flammable, its flash point shall be at least 50 °C and consideration shall be given to the test environment.

IECNORM.COM : Click to view the full PDF of IEC 62282-3-100:2012
Withdrawn

The hydrostatic test pressure shall not be less than the pressure stipulated in Table 2.

All external surfaces of the components that convey liquids shall be made visible to check for leakage. If certain components cannot be made visible, provisions shall be made to capture and route leakage to a point of visibility. If leak routing cannot be achieved then an alternate leak check will need to be devised by the manufacturer.

Prior to test performance, it shall be determined which liquid-conveying components are subject to the same internal pressure during normal operation of the fuel cell power system. These components shall comprise an individual test section, which shall then be pressurized separately and, when deemed necessary, isolated from the rest of the power system by any convenient means.

The test apparatus shall be filled with the liquid medium and connected to a suitable hydraulic system, including a pressure-measuring device capable of sustaining the required test pressure. Care should be taken to vent air from the test section during liquid fill.

The test pressure shall be gradually increased so that a uniform gauge pressure is attained. This pressure shall be maintained for at least 10 min, or longer as necessary, to complete the leak checks, while inspecting all external surfaces of the system for any sign of leakage. If a leak routing system is employed, the test pressure shall be held for a minimum of 3 h.

No liquid leakage is allowed. Any visible evidence of leakage is a cause for failing the test.

5.5 Strength tests

5.5.1 General

Any certified component(s), with a pressure rating of not less than the system's design pressure shall be considered as complying with the applicable provision(s) of this subclause.

5.5.2 Pneumatic strength tests

Portions of the fuel cell power system subject to this test shall not rupture, fracture, deform or exhibit other signs of physical damage when tested with appropriate gases or vapors (for example, the nominal operating gases, clean dry air or inert gas as specified by the manufacturer) that correlate with the expected constituents during operation and shutdown.

Prior to conducting this test, it shall be established which components are subject to the same internal pressure during normal operation of the fuel cell power system. These components shall comprise an individual test section which shall then be pressurized separately and, when deemed necessary, isolated from the rest of the fuel cell power system by any convenient means.

A suitable pressurizing system, capable of supplying the gaseous medium at the required test pressure shall be connected to the inlet of a test section. All functional components shall be caused to assume their open position so that the required test pressure is exerted on all components of the test section.

The gaseous medium shall be gradually admitted to the test section so that a uniform gauge pressure of not less than the pressure stipulated in Table 3 is attained gradually in approximately 1 min. This pressure shall be maintained for at least 1 min or greater, as appropriate, at which time the pressure shall be decreased to the design pressure and the system inspected.

Acceptance shall be determined according to Table 3.

IECNORM.COM : Click to view the full PDF of IEC 62282-3-100:2012
Withdrawn

Table 3 – Ultimate strength test requirements [a, d]

Hazard	Test type	System design conditions	Test parameters	Pass/fail criteria
Flammable or toxic	Hydrostatic[b]	All pressures	1,5 times design pressure	No rupture, fracture, deformation or other physical damage
	Pneumatic[c]	≥ 13 kPa	1,3 times design pressure	No rupture, fracture, deformation or other physical damage
		> 3,5 kPa but <13 kPa (except > 5,5 kPa but <13 kPa for stack)	17 kPa	No rupture, fracture, deformation or other physical damage
		≤ 3,5 kPa (except 5,5 kPa for stack)	5 times design pressure (except 3 times for stack)	No rupture, fracture, deformation or other physical damage
Pressured or heated gas (e.g. air or asphyxiant)	Hydrostatic[b]	≥ 100 kPa or ≥ 300 °C	1,3 times design pressure	No rupture, fracture, deformation or other physical damage
		< 100 kPa and < 300 °C	No requirement	No requirement
	Pneumatic[c]	≥ 100 kPa or ≥ 300 °C	1,3 times design pressure	No rupture, fracture, deformation or other physical damage
		< 100 kPa and < 300 °C	No requirement	No requirement
Pressured liquid (e.g. water, steam, glycol)	Hydrostatic[b]	≥1,1 MPa or ≥ 120 °C	1,5 times design pressure	No rupture, fracture, deformation or other physical damage
		< 1,1 MPa and < 120 °C	No requirement	No requirement
	Pneumatic[c]	≥ 1,1 MPa or ≥ 120 °C	1,3 times design pressure	No rupture, fracture, deformation or other physical damage
		< 1,1 MPa and < 120 °C	No requirement	No requirement

[a] The test pressure at any point in the piping system shall not exceed the maximum allowable test pressure of any non-isolated components, such as vessels, pumps, or valves. The pressure shall be continuously maintained for a minimum of 10 min and may then be reduced to the design pressure and held for such time as may be necessary to conduct the examinations for leakage.

[b] Pneumatic testing may alternately be used assuming component compatibility and the concurrence of the certifying body.

[c] Hydrostatic testing may alternately be used assuming component compatibility and the concurrence of the certifying body.

[d] The design pressure is the highest pressure that may occur under any and all operating modes, including steady state and transient.

IECNORM.COM : Click to view the full PDF of IEC 62282-3-100:2012

5.5.3 Hydrostatic strength test

Portions of the fuel cell power system subject to this test shall not rupture, fracture, deform or exhibit other signs of physical damage when tested with the appropriate test fluid.

The test fluid shall be the design liquid. If the manufacturer considers that testing with the design liquid is impractical, then the test liquid shall be water. If there is the possibility of damage due to freezing or to adverse effects of water on the piping system, another suitable non-toxic liquid may be used. If the liquid is flammable, its flash point shall be at least 50 °C and consideration shall be given to the test environment.

Prior to testing, it shall be determined which components are subject to the same internal pressure during normal operation of the fuel cell power system. These parts shall comprise an individual test section which shall then be pressurized separately and, when deemed necessary, isolated from the rest of the power system by any convenient means.

The test apparatus shall be filled with the liquid medium and connected to a suitable hydraulic system, including a pressure-measuring device capable of sustaining the required test pressure. Care should be taken to vent air from the test section during liquid fill.

The test pressure shall be gradually increased so that a uniform gauge pressure of not less than the pressure stipulated in Table 3. This pressure then shall be maintained for at least 1 min.

Acceptance shall be determined according to Table 3.

5.6 Normal operation type test

Verify the nameplate values using the procedures set out in IEC 62282-3-200.

5.7 Electrical overload test

The fuel cell system shall be capable of withstanding an electrical overload. Where a manufacturer permits an output current higher than the rated current for a certain period, the fuel cell system shall be thermally stabilized at rated current, then the output current shall be increased to the defined value and held constant for the defined time, both specified by the manufacturer.

There shall be no flame, risk of shock, rupture, fracture, permanent deformation or other physical damage to the system.

If no higher current is allowed by the manufacturer, the test shall not be performed.

5.8 Shutdown parameters

Means shall be provided for automatic shutdown of the appropriate system(s) of the fuel cell power system for any of the critical anomalies resulting from the risk analysis described in 4.1.

Compliance with this subclause shall be established for each anomaly using a simulated test procedure or supportive evidence from the manufacturer, either of which verifies that the required action will occur.

5.9 Burner operating characteristics tests

5.9.1 General

The procedures of this subclause are applicable to fuel cell power systems equipped with a burner, for example, dedicated to the reformer section, and shall be performed during the burner start-up and immediately following steady-state operating conditions:

a) at the test pressures and using test gases as defined in 5.2;

b) at the maximum and minimum fuel supply pressures specified by the manufacturer, if different from those pressures defined in 5.9.1 a);

c) when operating at 85 % and 110 % of the nominal input voltage. When provided with voltage variation protection within this range, the system shall be tested at the specified limits. In addition, the voltage variation protection shall be verified according to 5.8.

5.9.2 General testing

The automatic burner control system shall effect ignition of burner fuel immediately after the fuel reaches the burner port(s). A continuous pilot, when provided, shall not extinguish when the burner fuel gas is turned “ON” or “OFF”. This provision does not apply to an intermittent or interrupted type pilot when the burner fuel is turned “OFF”.

IECNORM.COM : Click to view the full PDF of IEC 62282-3-100:2012
Withdrawn

During the test it shall be verified that

a) the burner fuel ignites effectively without delayed ignition, flashback, undue noise or equipment damage,

b) the burner flames extinguish without flashback and undue noise,

c) the burner flames do not flash outside the combustion chamber,

d) the burner does not deposit carbon,

e) there is no gas escaping or backflow at the burner's primary air openings.

5.9.3 Limit testing

The test is carried out without altering the adjustment of the burner and ignition burner. The pressure at the fuel inlet is adjusted to the minimum and maximum pressure supplied on the name plate reduced to the minimum supply pressure as stated on the name plate from the normal pressure. This test is carried out at minimal and maximum vent length or minimum and maximum back pressure due to vent length. Under these conditions, it is checked that the burner is safely operating, and that the carbon monoxide emissions remain below the level required in Section 4.4.13. This test is repeated at the minimum heat input permitted by the controls, if ignition is possible under these conditions.

5.10 Automatic control of burners and catalytic oxidation reactors

5.10.1 General

The procedures of this subclause are associated with the start of all components intended to conduct a controlled oxidation reaction, for example, combustion (start burner of a reformer section), catalytic partial oxidation and catalytic combustion.

The manufacturer may opt to conduct ignition tests (see 5.10.2.4 through 5.10.2.8) on a fuel cell power system subassembly, rather than on a completely built unit, provided the sub-assembly contains all the parts (for example, the igniter and main burner, the manufacturer's specified igniter location, combustion chamber and, if applicable, the combustion/exhaust fan dedicated to the combustion chamber) that may have an effect on the test results.

NOTE This subclause also applies to anode exhaust catalytic reactor.

5.10.2 Automatic ignition control burners

5.10.2.1 General

The automatic ignition control of fuel cell power system burners shall be tested according to the following tests.

5.10.2.2 Effective ignition

This test is carried out at minimum and maximum vent length or minimum and maximum back pressure due to vent length.

The igniter shall light the main burner fuel immediately after fuel reaches the main burner ports. With the fuel cell power system maintained at rated voltage, the igniter shall be activated and ignition observed. Flames shall not flash outside the fuel cell power system, nor shall there be any damage to the fuel cell power system. Three ignition attempts shall be made, and in each instance ignition shall occur immediately after fuel reaches the main burner ports.

IECNORM.COM : Click to view the full PDF of IEC 62282-3-100:2012
Withdrawn

5.10.2.3 Ignition – Voltage variation

5.10.2.3.1 General

These tests are carried out at the maximum vent length or the maximum back pressure due to vent length.

5.10.2.3.2 Undervoltage

The voltage to the fuel cell power system shall be adjusted to 85 % of the rating plate voltage or in the event that the fuel cell power system has voltage variation protection, to the lowest voltage that this protective device permits, but no lower than 85 % of the rating plate voltage. Under this condition, the igniter shall light the main burner fuel within the main flame establishing period. Flames shall not flash outside the fuel cell power system, nor shall there be any damage to the fuel cell power system. A sufficient number of ignition attempts shall be made, and in each instance ignition shall occur within the designated time.

5.10.2.3.3 Overvoltage

The voltage to the fuel cell power system shall be adjusted to 110 % of the rating plate voltage or in the event that the fuel cell power system has voltage variation protection, to the highest voltage that this protective device permits, but no greater than 110 % of the rating plate voltage. Under this condition, the igniter shall light the main burner fuel within the main flame establishing period. Flames shall not flash outside the fuel cell power system, nor shall there be any damage to the fuel cell power system. A sufficient number of ignition attempts shall be made, and in each instance ignition shall occur within the designated time.

5.10.2.4 Flame-establishing period

The flame-establishing period shall be checked when the fuel cell power system is being operated as specified in 5.3. The time from energizing the main fuel flow to the time of proof of the ignition device or burner flame, as applicable, shall not exceed the appropriate start-up lock-out time as specified in 4.6.2. Flame failure lock-out time

5.10.2.5 Flame failure lock-out time

The fuel cell power system shall operate at its rated fuel consumption rate until thermal equilibrium is achieved. The flame failure lock-out time is measured between the moment when the pilot (if equipped) and main burner are intentionally extinguished by shutting off the fuel and the moment when, after admission of the fuel is restored, it ceases by the action of the safety device. The safety device shall de-energize all fuel safety shut-off valves within the flame failure lock-out time specified in 4.6.2. With the burner alight, flame failure is simulated by disconnection of the flame detector, and the time that elapses between this moment and that when the flame supervision device effectively shuts off the fuel supply is measured. For the purposes of this test, the control manufacturer's specified maximum flame failure lock-out time shall be used.

5.10.2.6 Recycling/spark restoration

With a recycling of the automatic burner control system, the recycle time shall be checked with the fuel cell power system being adjusted to its rated fuel consumption rate. When spark restoration occurs, it shall be verified that after flame failure the igniter effectively re-lit the fuel within the flame establishing period.

Flames shall not flash outside the fuel cell power system, nor shall there be any damage to the fuel cell power system. With the burner alight, flame failure is simulated by disconnection of the flame detector.

The time that elapses between flame outage and when the flame detector acts to shutdown fuel flow shall be observed, as well as the time that elapses between the moment the fuel flow

IECNORM.COM : Click to view the full PDF of IEC 62282-3-100:2012
Withdrawn

stops and the moment the igniter re-energizes. For the purposes of this test, the control manufacturer's specified maximum flame failure lock-out time and minimum recycle time shall be used.

5.10.2.7 Pilot flame reduction

This test is carried out at minimum and maximum vent length or minimum and maximum back pressure due to vent length.

A pilot, when provided, shall effect safe ignition of fuel at the burner when the pilot fuel supply is reduced to an amount just sufficient to keep the safety shut-off valve open or just above the point of flame extinction, whichever represents the higher pilot fuel rate. Flames shall not flash outside the fuel cell power system, nor shall there be any damage to the fuel cell power system.

For purposes of this test, the control manufacturer's specified maximum flame failure lock-out time shall be used.

This test shall be initiated from both a cold start and immediately after the fuel cell power system has been shut off after equilibrium condition.

5.10.2.8 Delayed ignition

This test is carried out at minimum and maximum vent length or minimum and maximum back pressure due to vent length.

For a fuel cell power system that is arranged for ignition of the main burner directly by an electric igniter, delay of ignition of the fuel shall not result in flashback of flame to the outside of the fuel cell power system or any damage to the fuel cell power system and the connected vent system. For the purposes of this test, the control manufacturer's specified maximum trial for ignition period for the automatic burner control system shall be used. For systems that deactivate the igniter prior to the end of the trial for ignition period, the test shall be conducted using the control manufacturer's specified maximum ignition activation period timing.

With the fuel cell power system at room temperature, the fuel cell power system shall be placed into operation at normal heat input rate with the ignition means temporarily circumvented for varying intervals of time up to the control manufacturer's maximum specified trial for ignition period or maximum specified ignition activation period, whichever is shorter. For multi-try systems, attempts to ignite shall be made for varying intervals of time for each trial for ignition period and any time the ignition means is activated throughout the total operating sequence up to lock-out. The ignition of the main burner shall be observed for each of the trials. There shall be no flame flashout or damage to the fuel cell power system. Delayed ignition testing is also used to confirm the flame-establishing period provided by the manufacturer.

5.10.2.9 Automatic burner control system components temperature test

Thermocouples or equivalent temperature measuring devices shall be suitably attached to applicable points of each automatic burner control system component. The fuel cell power system shall be operated at rated fuel consumption rate until equilibrium condition is obtained. Temperatures of the components shall then be obtained. The temperatures obtained shall not exceed those specified by the components' manufacturers.

5.10.2.10 Pre-purge

This test is applicable to systems that require purge according to 4.6.2 q).

According to the option chosen by the manufacturer, the pre-purge volume or the pre-purge time is determined as follows.

IECNORM.COM : Click to view the full PDF of IEC 62282-3-100:2012
Withdrawn

a) Pre-purge volume

1) The rate is measured at the outlet of the combustion products evacuation duct, at ambient temperature (measured as nominal flow).

2) The fuel cell power system is at ambient temperature and not operating. The fan is supplied with electricity under actual pre-purge conditions.

3) The rate, measured with a limit of error of ± 5 %, is corrected to reference conditions.

4) The manufacturer states the volume of the combustion circuit.

b) Pre-purge time

1) The fuel cell power system is at ambient temperature and not operating.

2) The time between the fan starting and the ignition device being energized is determined.

5.10.3 Automated control of catalytic oxidation reactors

a) The time of initiation of the fuel flow to proof of the reaction initiation shall not exceed the reaction initiation time specified in 4.6.3 e).

Method of test: The fuel cell power system shall be operated as specified by the manufacturer until conditions for reaction initiation are attained. Then, the fuel supply, for air-rich operation, or the air supply, for fuel-rich operation, shall be opened. The system response time shall begin at that point of time and shall end when the reactor monitoring devices signal as specified by the manufacturer that the reaction has been successfully initiated. The reaction initiation time shall not exceed the value specified in 4.6.3 e).

b) In the event of reaction extinction or reaction rate decrease or increase to unsafe levels, the primary safety control shall de-energize the fuel safety shut-off valve, for air-rich operation, or the air safety shut-off valve, for fuel-rich operation, followed by the de-energizing of the fuel safety shut-off valve, within the reaction failure lock-out time specified in 4.6.3 g).

Method of test: The fuel cell power system shall be operated as specified in 5.3 until equilibrium conditions are attained. Then, the fuel supply, for air-rich operation, or the air supply, for fuel-rich operation, shall be shut off. With the catalytic reactor alight, reaction failure is simulated by disconnection of the device monitoring the reaction temperature. The time measured between this moment and the time when the system control shuts off the fuel supply for air rich operation, or the supply of all reactants for fuel-rich operation, shall not exceed the reaction failure lock-out time specified in 4.6.3.

5.11 Exhaust gas temperature test

When the fuel cell power system is provided with a venting system, the maximum temperature of the exhaust gases conveyed by that venting system shall not exceed temperatures acceptable for the materials used to construct the venting system.

Method of test: The exhaust gas temperature shall be measured by a thermocouple or similar devices. A sufficient number of test instruments should be used to establish the maximum temperature within the exhaust streams while considering size and symmetry of the venting systems.

The fuel cell power system shall be installed and operated as specified in the applicable provisions of 5.3. When equilibrium conditions are attained, the maximum temperature of the exhaust gases shall be determined as specified above. The temperature obtained shall not exceed the temperature for which the venting system material has been determined to be acceptable.

5.12 Surface and component temperatures

a) The fuel cell power system shall be installed and operated as specified in 5.3. When thermal equilibrium conditions are attained, temperatures shall be determined using any suitable temperature instrumentation means.

IECNORM.COM : Click to view the full PDF of IEC 62282-3-100:2012
Withdrawn

1) The maximum temperature of any surface that may be contacted by personnel performing regular and routine service while the fuel cell power system is in operation shall not exceed the limits specified in 4.4.11.
2) The maximum temperature of any remaining surface that may be unintentionally exposed to flammable gas or vapour shall meet the requirements as specified in 4.6.1 e).
3) The maximum temperature of system components shall not exceed the temperature to which the components are rated.

b) Wall, floor and ceiling temperatures

1) This test is only for fuel cell power systems either having cabinet surface temperatures, or a design that allows the heat to radiate to an external surfaces exceeding the requirements in 4.4.11 intended for installation on or near combustible surfaces.
2) The fuel cell system is placed on the test panels made of wood.
3) The manufacturer shall specify the distance between the fuel cell system and the back and sidewalls, ceiling (and closet door, if applicable) of the test panels.
4) The fuel cell system is placed on the test panels having the following specifications.
5) Dull black-painted plywood approximately 20 mm thick is used for the test panels.
6) Temperature rises are determined by means of thermocouples.
7) Thermocouples used for determining the temperature rise of the surface of walls, ceiling and floor of the test corner are attached to the back of small blackened disks of copper or brass. The front of the disk is flush with the surface of the boards.
8) As far as possible, the fuel cell system is positioned so that the thermocouples detect the highest temperatures.
9) The fuel cell system shall be operated at maximum power output. After equilibrium temperatures have been obtained, the temperature of the test panels shall be measured and checked according to the requirements of 4.4.11.

5.13 Wind tests

5.13.1 General

Wind tests are only applicable for fuel cell systems intended for installation outdoor or indoor units having horizontal air inlets and exhaust to the outdoors.

These tests are carried out at minimum and maximum vent length or minimum and maximum back pressure due to vent length.

5.13.2 Wind source calibration procedure for winds directed perpendicular to the wall

The wind source calibration configuration shall consist of the centre of the wind source being directed perpendicular to the centre of a test wall equipped with four ports located around a vent terminal which is installed in the centre of the test wall, in accordance with the manufacturer's installation instructions (see Figure 2).

Figure 2 shows the points designating static pressure ports located 305 mm (1 ft) horizontally and vertically from the extremities of the vent terminal.

The vent terminal is located in the centre of the test wall and in accordance with the manufacturer’s installation instructions.

IECNORM.COM : Click to view the full PDF of IEC 62282-3-100:2012
Withdrawn

Dimensions in millimetres

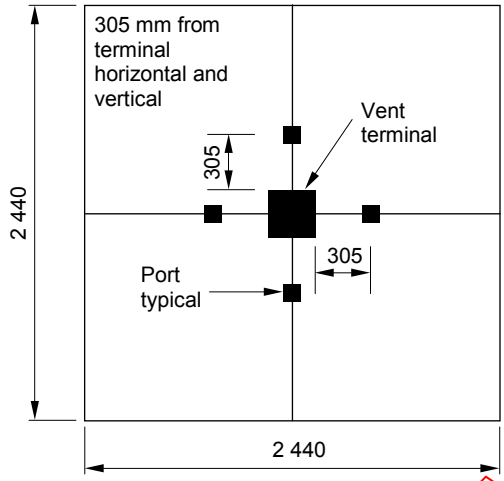

Figure 2 – Test wall with static pressure ports and vent terminal locations

The ports shall be manifolded to obtain a single average static pressure reading. With the wind source directed against the wall, the average static pressure reading as measured by a manometer referenced at the fuel cell power system process air opening shall form the basis for calibrating the wind source using the data in Table 4.

Table 4 – Wind calibration

Nominal km/h	**Average static pressure** Pa
16	10
54	116

Additionally, the wind source calibrated at 54 km/h shall not generate a velocity pressure exceeding 12 Pa (16 km/h) at a distance of 305 mm perpendicular to the test wall and in line with the ports.

5.13.3 Verification of operation of outdoor fuel cell power systems under wind conditions

The procedures of this subclause apply only to fuel cell power systems intended for outdoor installation or components of fuel cell power systems intended for outdoor installation.

Cabinets of fuel cell power systems intended for outdoor installation or enclosures of components of fuel cell power systems intended for outdoor installation shall be subject to, and pass, a wind test according to the following method.

Method of test: The fuel cell power system shall start and operate normally, without damage or malfunctioning of any part and without creating a hazardous or unsafe condition, when exposed to winds having nominal velocities from 9 km/h up to and including 54 km/h.

A wind, produced by a fan/blower of sufficient capacity to develop a draft having a velocity from 9 km/h up to and including 54 km/h, shall be directed against an outer surface of the fuel cell power system at the point(s) deemed most critical by the testing agency. The fan/blower shall be located so a uniform wind, covering the entire projected area of the outer surface, is directed horizontally toward the fuel cell power system at the specified velocity measured in a vertical plane 50 cm from the windward surface of the fuel cell power system.

IECNORM.COM : Click to view the full PDF of IEC 62282-3-100:2012
Withdrawn

With the fuel cell power system subjected to a wind having a nominal velocity of 16 km/h, the pilot, when provided, shall be capable of being ignited.

With the fuel cell power system subjected to a wind having a nominal velocity of 54 km/h, the burner gas shall ignite from the ignition device without excessive delay and the burner and pilot flames shall not extinguish. The pilot, when provided, shall be operated alone, as well as simultaneously with the burner.

With the hydrogen (H2) fuel cell power system subjected to a wind having a nominal velocity of 54 km/h, the anode exhaust gas shall be oxidized in the combustor without excessive delay and the combustor shall not stop its oxidizing reaction.

At the discretion of the conformity assessment organization, additional tests may be conducted with winds of specified and unspecified velocities directed from other direction(s).

5.13.4 Verification of operation of indoor fuel cell power systems vented horizontally through an outside wall

Method of test: These tests shall be conducted at normal inlet test pressure.

a) The fuel cell power system shall meet the requirement of 4.5.3 j) when testing with a wind direction other than perpendicular to the wall, except that the wind produced by the wind source shall have a nominal velocity of 54 km/h (134,5 Pa free-stream velocity pressure) measured with the wind parallel to the wall with a Pitot tube at three locations positioned on a plane perpendicular to the wall and also bisecting the vent system. The three locations shall be at distances of 305 mm horizontally and vertically from the extremities of the vent system. (See Figure 3.)

Dimensions in millimetres

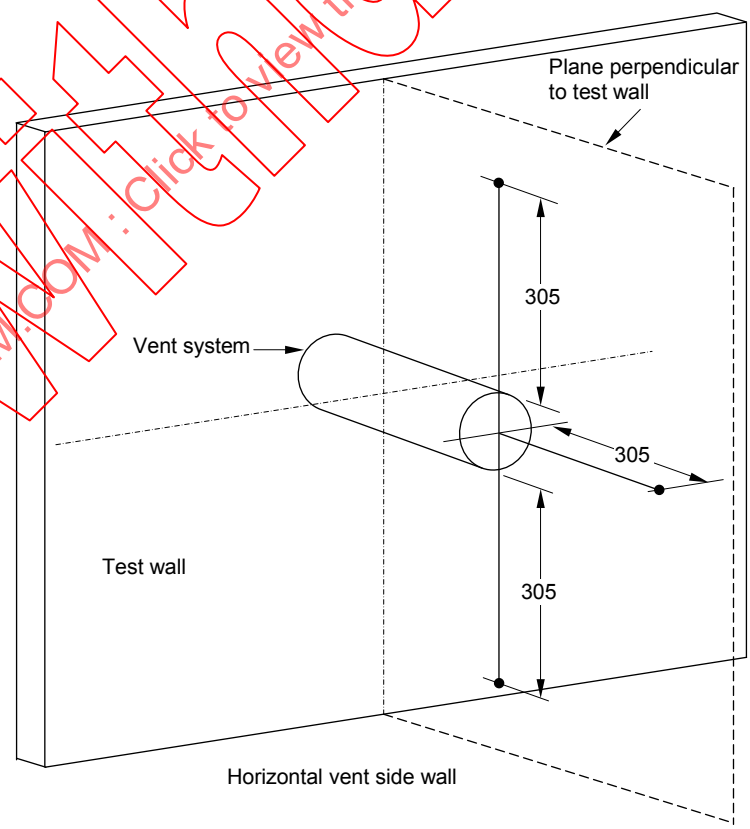

Figure 3 – Vent test wall

IECNORM.COM : Click to view the full PDF of IEC 62282-3-100:2012
Withdrawn

After the calibration of the wind source parallel to the wall, the wind source or test wall shall be rotated to direct the wind from other angles at the discretion of the test agency.

b) The fuel cell power system shall meet the requirement of 4.5.3 j). For wind directed perpendicularly to the wall, either of the following test methods shall apply.

1) The following test method shall be applied at the maximum vent length specified. Remove only the vent terminal from the horizontal vent, when a vent terminal is used. Equip the vent pipe with a piezo ring 305 mm from the outlet of the horizontal vent (see Figure 4).

Dimensions in millimetres

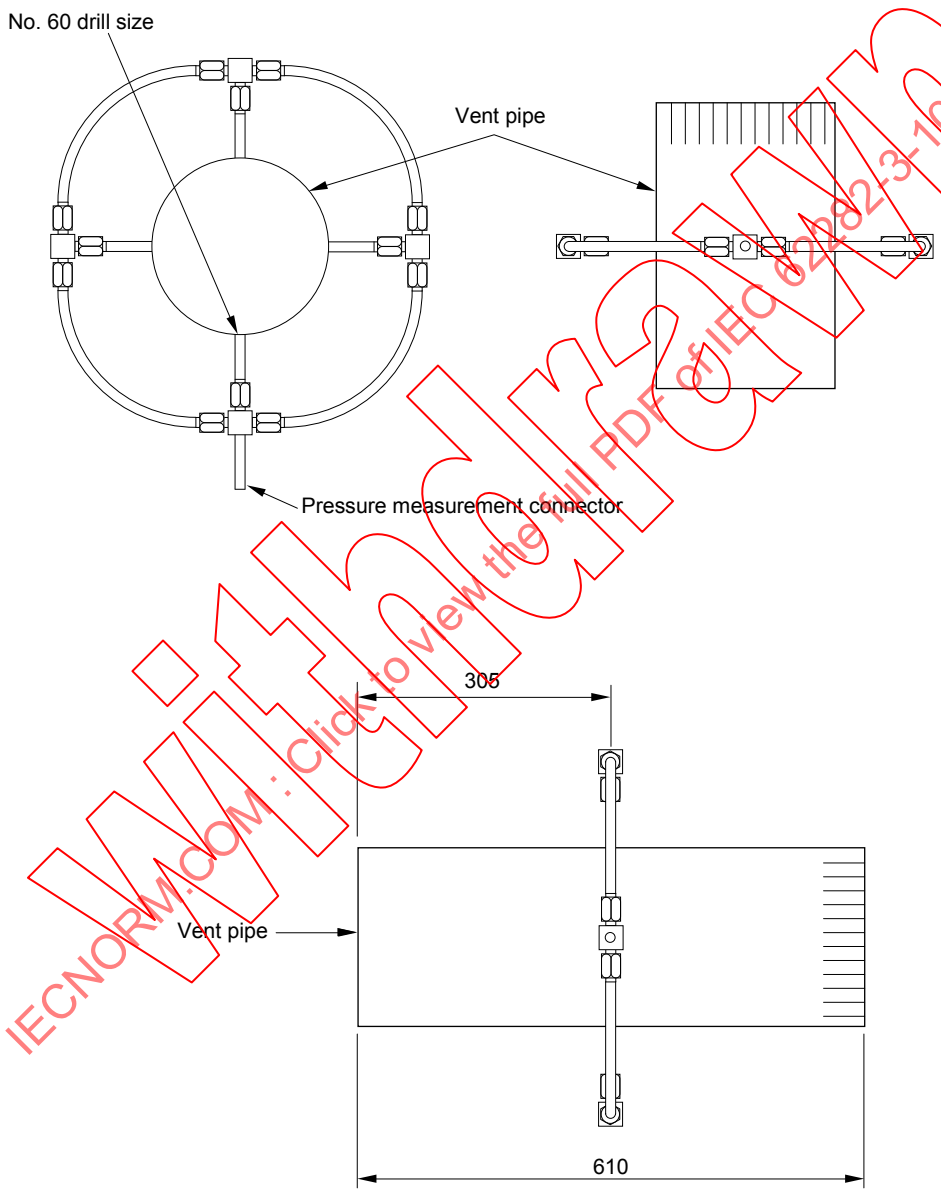

Withdrawn
IECNORM.COM : Click to view the full PDF of IEC 62282-3-100:2012

Figure 4 – Piezo ring and details of typical construction

Connect the piezo ring to a differential pressure gage that can be read directly to within 1,24 Pa pressure. The manometer reference pressure connection shall be extended to a point adjacent to the fuel cell combustion air supply opening.

Start fuel cell power system operation. Restrict the end of the vent until the pressure at the piezo ring reaches 116 Pa. Stop fuel cell power system operations. Turn on the gas supply to the fuel cell power system. With the restriction still in place, start the fuel cell

power system operation from a cold start. While under the above condition, the fuel cell power system shall not shut down. After steady-state conditions are attained readjust the restriction to maintain 116 Pa. While operating under the above condition, the fuel cell power system shall not shut down for a period of 10 min. While maintaining the vent pressure of 116 Pa, the fuel cell power system shall be turned on and off by the automatic controls, and the fuel cell power system shall start up without excessive delay.

2) The fuel cell power system shall successfully initiate start-up when subjected to a wind speed of 9 km/h up to and including 54 km/h.

3) The fuel cell power system shall continue to operate when subjected to a wind speed of 9 km/h up to and including 54 km/h.

5.13.5 Carbon monoxide (CO) and flammable gas components emissions under wind – Indoor units

For fuel cell power systems installed indoors and utilizing an exterior wall vent air inlet, the CO and flammable gas emissions shall be checked when a wind ranging from 9 km/h up to and including 54 km/h is exerted against the vent-air intake terminal(s). The wind is applied from any horizontal direction with respect to the vent-air terminals. The vent-air intake system is exposed to a 54 km/h wind velocity (free-stream velocity pressure of 134,5 Pa measured with a Pitot tube at three locations on a plane perpendicular to the wall and also bisecting the vent-air intake system). The three locations shall be at distances of 305 mm horizontally and vertically from the extremities of the vent-air intake system. The fuel cell power system shall operate at nominal input rate until a constant exhaust gas temperature is achieved. During the application of this range of wind velocities, the emissions are measured at least 3 times within 15 min. The average values shall be deemed the concentrations in this test and shall be analysed to determine that the carbon monoxide concentration complies with 4.4.13 and flammables concentration is below 25 % LFL.

After the calibration of the wind source parallel to the wall, the wind source or test wall shall be rotated to direct the wind from other angles at the discretion of the conformity assessment organization.

For wind directed perpendicular to the wall, the fuel cell power system shall be operated until a constant exhaust gas temperature has been attained. Either of the tests specified in 5.13.4 b) shall be applied.

When using test method 5.13.4 b) 1), the vent pressure shall be varied from zero to 116 Pa. During the application of this range of vent pressure, sufficient effluent samples shall be secured and analysed to determine that the carbon monoxide concentration complies with 4.4.13 and flammables with less than 25 % LFL.

When using test method 5.13.4 b) 2) the wind produced by the wind source shall be varied to have nominal velocities from –9 km/h up to and including 54 km/h calibrated as specified in 5.13.2. During the application of this range of wind velocities, sufficient effluent samples shall be secured and analysed to determine that the carbon monoxide concentration complies with 4.4.13 and flammables with less than 25 % LFL.

5.13.6 Carbon monoxide (CO) and flammable gas components emissions under wind – Outdoor units

For fuel cell power system installed outdoors, the carbon monoxide (CO) and flammable gas emissions shall be checked when the unit is exposed to a wind ranging from 9 km/h up to and including 54 km/h. A wind, produced by a blower of sufficient capacity to develop a draft having a velocity up to and including 54 km/h, shall be directed against an outer surface of the fuel cell power system at the points deemed most critical by the conformity assessment organization. The blower shall be located so a uniform wind, covering the entire projected area of the outer surface, is directed horizontally toward the fuel cell power system at the specified velocity measured in a vertical plane 0,5 m from the windward surface of the fuel cell power system. The fuel cell power system shall operate at a nominal input rate until a

IECNORM.COM : Click to view the full PDF of IEC 62282-3-100:2012
Withdrawn

constant exhaust gas temperature is achieved. During the application of this range of wind velocities, the emissions are measured at least 3 times within 15 min. Its average values shall be deemed the concentrations in this test and shall be analysed to determine that the carbon monoxide concentration complies with 4.4.13 and flammable concentration is below 25 % LFL.

5.14 Rain test

5.14.1 For outdoor units: A simulated rain test shall be performed equivalent to a minimum IP rating of 3 (*second characteristic numeral 3*) as defined in IEC 60529 or the manufacturer's higher declared IP rating. Compliance is defined in 5.14.3.

5.14.2 For indoor units supplied with horizontal venting hardware: The simulated rain is to be applied to the vent termination. Use the test method as prescribed in 14.2.3 of IEC 60529:1989. Compliance is defined in 5.14.3.

5.14.3 The fuel cell power plant shall start and operate without damage or malfunction of any part that would create a hazardous condition when subjected to a simulated rain test.

Upon completion of exposure to the simulated rainstorm, there shall be no evidence of damage or malfunction of any part of the fuel cell power system, nor detrimental accumulation of water in any part of the fuel cell power system. The test is not to result in the entrance of water into an electrical enclosure above the lowest live part or in wetting live parts, except motor windings may be judged by dielectric withstand test, providing the motor(s) is constructed, located or shielded so that the windings are not directly exposed to water.

5.15 Emissions

5.15.1 General

These tests are carried out at maximum back pressure due to vent length.

5.15.2 Carbon monoxide (CO) and flammable gas emissions

5.15.2.1 General

Carbon monoxide emissions measured at the fuel cell power system shall not be in excess of 0,03 % CO in an air-free sample of the effluents according to the tests of 5.15.2.2 and 5.15.2.3, and flammable gas concentration is below 25 % LFL in the effluents, according to the tests of 5.15.2.2 and 5.15.2.3.

5.15.2.2 Blocked exhaust outlet

The CO and flammable gas emissions shall be checked with the fuel cell power system exhaust outlet blocked to any degree up to and including complete closure. The fuel cell power system shall be operated at nominal fuel input rate for at least 15 min. When the fuel cell power system incorporates a control to automatically shut off the main fuel supply under blocked outlet conditions, the area of the exhaust outlet shall be gradually decreased to the lowest point at which the control will remain in its open position.

At this blockage, and once thermal equilibrium has been achieved, the emissions shall be measured. The measurements shall be carried out at least 3 times within 15 min. The average values shall be regarded as the concentrations in this test.

5.15.2.3 Blocked air supply

This subclause applies to indoor systems that use nonconventional venting. The air is taken from outdoors through a dedicated pipe and subsequently routed into the fuel cell power system for process air purposes.

IECNORM.COM : Click to view the full PDF of IEC 62282-3-100:2012
Withdrawn

The CO and flammable gas emissions shall be checked with the fuel cell power system air supply blocked to any degree up to and including complete closure. The fuel cell power system shall be operated at nominal fuel input rate for at least 15 min. When the fuel cell power system incorporates a control to automatically shut off the main fuel supply under blocked outlet conditions, the area of the air supply shall be gradually decreased to the lowest point at which the control will remain in its open position.

At this blockage, and once thermal equilibrium has been achieved, the emissions shall be measured. The measurements shall be carried out at least 3 times within 15 min. The average values shall be deemed as the concentrations in this test.

5.15.3 Normal conditions

This test applies to both indoor and outdoor units.

The CO emissions shall be checked with the fuel cell power system exhaust unrestricted. The fuel cell power system shall be operated at normal voltage and at nominal fuel input rate for at least 15 min. The effluent will then be analysed.

This test is repeated at the minimum heat input permitted by the controls, if ignition is possible under these conditions.

5.16 Blocked condensate line test

A fuel cell power system having a condensate disposal system(s) shall, under conditions of a blocked condensate drain line(s), continue to operate satisfactorily or shall shut down during conduct of the following test.

The condensate disposal system(s) shall be installed in accordance with the manufacturer's installation instructions. The condensate drain line(s) shall be blocked at, or upstream of, the narrowest point in the system(s). When the condensate disposal system(s) is provided with an overflow port, blockage shall be applied upstream of the overflow port or the port shall be plugged.

The fuel cell power system shall be placed in operation at normal input rate(s) and normal inlet test pressure. The condensate disposal system(s) shall be filled to the maximum level of water attainable or to the point just prior to causing the fuel cell to shut off (the method of filling shall be at the discretion of the testing agency). The emissions shall be monitored during filling. At no time shall the concentration of carbon monoxide in an air-free sample of the effluents, when tested in an atmosphere having a normal oxygen supply, exceed 0,03 % or the fuel cell power system shall shut down. Also, at no time shall flammable gas discharge into the fuel cell power system's interior compartments or exhaust.

The fuel cell power system shall not present an electric shock hazard as determined by the electrical safety tests in 5.18.

A fuel cell power system which cannot be placed in operation under conditions of blocked condensate drain line(s) shall be deemed to comply with this test.

5.17 Condensate discharge test

Many technologies collect condensate overflow, not all are pressurized with flammable gas. The requirement is meant to apply to condensate removed from a flammable gas stream. The design of a fuel cell power system which is required to have a vent drain shall be such that the condensate trap(s) self-prime and effluent and or flammable gas shall not be discharged from the condensate drain line(s) after the condensate trap(s) self-prime under the following test.

Withdrawn
IECNORM.COM : Click to view the full PDF of IEC 62282-3-100:2012

The test shall be performed with the shortest vent specified by the appliance manufacturer. The vent material shall be a material specified by the fuel cell manufacturer, and the material with the least heat conduction from the vent gas to the air.

The condensate trap(s), if provided or supplied as part of the fuel cell power system or if the installation instructions require it to be supplied by the installer, shall be installed in accordance with the manufacturer's installation instructions. Do not fill the trap(s) with water prior to conduct of this test.

This test shall be conducted up to and including maximum blocked flue conditions where the fuel cell power system continues to operate.

This provision shall be deemed met if the effluents and or flammable gas do not issue from the condensate drain line(s).

5.18 Electrical safety tests

The electrical safety of the fuel cell power system shall be verified against the application standard as shown in 4.7.

Components connected to an electrical circuit, which are not approved by an international standard for electrical safety, shall comply with 4.7.

5.19 EMC test

The fuel cell power system shall be tested according to the relevant standard as shown in 4.8.

5.20 Vent system leakage test

This test applies to natural gas fuel cell power systems.

All joints and connections of a venting system shall be tight. This provision shall be deemed met when leakage from the system is not in excess of the limit specified below.

A venting system operating under a negative internal pressure need not be subjected to the procedure of this provision.

For purposes of this test, the entire venting system, excluding the vent terminal, shall be isolated from the rest of the fuel cell power system by any convenient means and, when applicable, shall be sealed in accordance with the manufacturer's instructions. The outlet of the venting system shall be sealed by any convenient means.

The manufacturer shall supply a suitable test fitting which shall be attached and sealed to the inlet of the venting system. This test fitting also shall have an inlet tap which shall be connected to an air pressure source and a pressure measuring device for measuring the internal pressure of the system. This device shall have an accuracy of ± 2,0 % of span and have a full scale pressure such that the operating pressure occurs in the middle half of the scale.

A suitable supply of clean dry air shall be permitted to flow through a metering device and into the venting system through the air supply fitting.

The internal air pressure in the venting system shall be maintained at 0,5 kPa or twice the design pressure specified by the manufacturer, whichever is greater. The leakage rate shall be measured in cubic metres per hour (cubic feet per hour).

This provision shall be deemed met when leakage from the venting system does not exceed 2 % of the total volume of effluents. This value shall be determined by the following formula:

Withdrawn
IECNORM.COM : Click to view the full PDF of IEC 62282-3-100:2012

$$L = 0{,}02 \times I \times V$$

where

L = allowable leakage rate from the venting system, in m^3/h (ft^3/h);

I = fuel gas consumption, MJ/h (kBTU/h); and

V = 0,4026 m^3/MJ (15 ft^3/kBTU) of gas consumed. Value based on 50 % excess air added to effluent.

NOTE For systems rated in watts (W), allowable leakage rates, in cubic centimetres per second (cm^3/s), can be determined by multiplying the fuel gas consumption, in kilowatts (kW), by 8,05.

5.21 Leakage tests (repeat)

The fuel cell system shall be re-tested for leakage at the same testing conditions as specified in 5.4.

6 Routine tests

6.1 Routine tests shall be performed on all production units. They shall be performed in a test environment simulating the application of the fuel cell system, for which the fuel cell system is designed, in order to obtain the required operating conditions. In particular, the test environment for the routine tests shall provide interfaces at boundary limits according to the designed application of the fuel cell plant. It is recommended that the routine tests be performed in the following order.

If the routine tests are performed in direct conjunction with the initial start-up and conditioning procedure of the fuel cell system, it is connected to the conditioning facility and is under operational conditions as specified by the manufacturer.

The following routine tests shall be performed on all fuel cell power systems.

Test each fuel cell power system to determine the tightness of pressure bearing parts and components including joints and connections. This applies to systems with hazardous fluids.

Leakage tests shall be conducted in accordance with 5.4 and shall meet or exceed the acceptance criteria therein, or they shall be pressurized with an appropriate dry gas (for example, air or nitrogen) over the specified pressure, then sealed and left for longer than 10 min. The leakage calculated from the pressure difference between, before and after the elapse of time using the following formula shall be not more than the specified value.

$$L_1 = V \times T_0/p_0 \times \{(p_1 + p_{a1})/(T_0 + T_1 - 15) + (p_2 + p_{a2})/(T_0 + T_2 - 15)\} \times 60/t$$

where

L_1 is the gas leakage from the FC system in m^3/h;

V is the internal space volume within the pressurized range in m^3 (gas volume excepting the internal structure volume);

T_0 is the reference temperature 288,15 K (15 °C);

T_1 is the internal space temperature (°C) at the beginning of measurement;

T_2 is the internal space temperature (°C) at the end of measurement;

p_0 is the reference pressure 101,325 kPa (1 atm);

p_1 is the pressure kPa at the beginning of the measurement;

p_2 is the pressure kPa at the end of the measurement;

p_{a1} is the atmospheric pressure kPa at the beginning of the measurement;

IECNORM.COM : Click to view the full PDF of IEC 62282-3-100:2012
Withdrawn

p_{a2} is the atmospheric pressure kPa at the end of the measurement;

t is the measuring time in min.

For systems with installed relief valves, amending the test pressure from the levels in 5.4 to 85 % of the relief valve set point is allowed if mutually agreed between the manufacturer and the testing agency.

6.2 Normal operation test: as described in 5.6.

6.3 Dielectric strength test: as described in the relevant product application standard as given in 4.7.

6.4 The following tests shall be performed on the basis of a sampling plan:

– burner operation test as described in 5.9.1;

– carbon monoxide (CO) emissions are measured during the burner operation test as described in 5.9.1. The limits shall be in accordance with 4.4.13.

7 Marking, labelling and packaging

7.1 General requirements

The fuel cell power system shall be marked in compliance with the applicable clauses of ISO 3864-2. Marking and mounting methods shall be durable and suitable for the application.

7.2 Fuel cell power system marking

Each fuel cell power system shall bear a data plate or combination of adjacent labels located so as to be easily read when the fuel cell power system is in a normally installed position.

The marking shall clearly state any restrictions on use, in particular the restriction whereby the fuel cell power system shall be installed only in areas where there is sufficient ventilation.

The data plate/label(s) shall include the following information:

a) manufacturer's name (with trademark), and location;

b) manufacturer's model number or trade name;

c) serial number of the fuel cell power system and year of manufacture;

d) electrical input, as applicable (voltage/type of current/frequency/phase/power/ consumption);

e) electrical output (voltage/type of current/frequency/phase /rated power/power factor; kVA);

f) fuel type to be used by the fuel cell power system;

g) range of fuel supply pressure;

h) fuel consumption at rated power (kW);

i) range of ambient temperatures (minimum and maximum) within which the fuel cell power system is intended to operate in degrees Celsius;

j) outdoor or indoor use;

k) warnings for alerting personnel to the potential for personal injury or equipment damage and requirements to follow installation and operation instruction.

If the fuel cell power system is rated under hazardous area classification according to IEC 60079-10, it shall be marked accordingly.

Withdrawn
IECNORM.COM : Click to view the full PDF of IEC 62282-3-100:2012

7.3 Marking of components

All user serviceable parts shall be identified to match the fuel cell power system drawings in the user's manual.

Warning signs shall be appropriately placed to identify electrical hazards, contents from drain valves, hot components and mechanical hazards. Preference should be given to the use of standard symbols given in ISO 3864-2.

Control devices, visual indicators and displays (particularly those related to safety) used in the man-machine interface shall be clearly marked with regard to their functions either on or adjacent to the item. Preference should be given to the use of standard symbols given in IEC 60417 and ISO 7000.

7.4 Technical documentation

7.4.1 General

For each fuel cell power system, the manufacturer shall provide the information necessary for safe installation, operation, and servicing of the fuel cell power system and shall, in particular, draw attention to any restrictions on use. The information shall be provided in the form of technical documents such as drawings, diagrams, charts, tables and instructions, and these shall be on suitable data medium and language.

Part of the technical information might be provided only to qualified personnel, in which case the manufacturer shall specify criteria for qualification of personnel.

The information provided with the fuel cell power system shall include the following:

a) a clear, comprehensive description of the equipment, installation and mounting, and the connection to electrical supply(ies) and other site interfaces;

b) physical environment and operating conditions (fuel and water supply characteristics, etc.) according to 4.1;

c) electric circuit diagrams;

d) information (where appropriate) on

- handling, transportation and storage,
- software programming,
- sequence of operations,
- frequency of inspection,
- frequency and method of functional testing,
- guidance on the adjustment, maintenance, and repair, particularly of the protective devices and circuits,
- parts list and recommended spare parts list;

e) a description (including interconnection diagrams) of the safeguards, interlocking functions, and interlocking of guards for potentially hazardous situations;

f) a description of the safeguarding and of the means provided where it is necessary to suspend the safeguarding (for example, for manual programming, programme verification).

7.4.2 Installation manual

The installation manual shall provide the installer with all the information necessary for the preliminary work of setting-up the fuel cell power system.

IECNORM.COM : Click to view the full PDF of IEC 62282-3-100:2012
Withdrawn

In particular, an interconnection diagram or table shall be provided. That diagram or table shall give full information about all external connections (for example, electrical supply, fuel supply, water supply, control signals, exhaust venting, ventilation connections, etc.).

These installation instructions shall provide guidelines on location and design of the fuel cell power system foundation; ventilation requirements; protection from weather hazards; recommended height in relation to the base flood elevation; security enclosure; acceptable distances from combustible materials, vegetation, public ways, and protection from vehicular impact.

In addition to the above, the installation manual shall specify

– the manufacturer's or distributor's name and location, and the model number of the fuel cell power system;
– the minimum and maximum fuel supply pressures and the method of determining these pressures;
– adequate clearances around air supply, ventilation and exhaust openings;
– adequate clearances for maintenance, servicing and proper operation;
– a sediment trap or filter must be provided upstream of the fuel controls, when applicable;
– if appropriate, special instructions for extended dormant periods;
– instructions which shall cover venting system requirements, including air intake pipe (if used).

7.4.3 User's information manual

For fuel cell power systems to be installed for residential use, the system supplier shall provide to the residence owner a user's information manual, together with any appropriate additional information to facilitate maintenance (for example, addresses of the importer, repairer, etc.).

The user's information manuals shall be typed or typeset and formatted to provide easy-to-follow procedures. Illustrations should be used to identify fuel cell components, dimensions and clearances, assembled components, and connection points as needed to make the instructions clear. Illustrations should also be used to identify the location of serviceable components and illustrate correct methods for performing service procedures.

When text is shown in quotation marks, it shall appear in the user's information manual exactly as shown.

The user's information manual shall be affixed to the fuel cell in a pocket or attached by a clip which is part of the fuel cell or shall be supplied in an envelope(s) marked with instructions:

a) to the installer to affix them on, or adjacent to, the fuel cell; and/or
b) to the consumer to retain them for future reference.

Each user's information manual should be divided into appropriate chapters or sections and should include a table of contents and clearly marked page numbers.

The user's information manual shall contain the following safety information, as applicable:

1) Front cover

The front cover shall present the user(s) with only the most important safety instructions. The front cover or, in the absence of a cover, the first page of the manual shall bear the following safety precautions boxed as prescribed in Figures 5, 6 and 7:

Withdrawn
IECNORM.COM : Click to view the full PDF of IEC 62282-3-100:2012