IEC TR 60919-1

Edition 3.0 2017-05

TECHNICAL REPORT

AMENDMENT 2

Performance of high-voltage direct current (HVDC) systems with line-commutated converters – Part 1: Steady-state conditions

Withdrawn
IECNORM.COM : Click to view the full PDF of IEC TR 60919-1:2010/AMD2:2017

IEC 60919-1:2010-05/AMD2:2017-05(en)

THIS PUBLICATION IS COPYRIGHT PROTECTED
Copyright © 2017 IEC, Geneva, Switzerland

All rights reserved. Unless otherwise specified, no part of this publication may be reproduced or utilized in any form or by any means, electronic or mechanical, including photocopying and microfilm, without permission in writing from either IEC or IEC's member National Committee in the country of the requester. If you have any questions about IEC copyright or have an enquiry about obtaining additional rights to this publication, please contact the address below or your local IEC member National Committee for further information.

IEC Central Office
3, rue de Varembé
CH-1211 Geneva 20
Switzerland

Tel.: +41 22 919 02 11
Fax: +41 22 919 03 00
info@iec.ch
www.iec.ch

About the IEC
The International Electrotechnical Commission (IEC) is the leading global organization that prepares and publishes International Standards for all electrical, electronic and related technologies.

About IEC publications
The technical content of IEC publications is kept under constant review by the IEC. Please make sure that you have the latest edition, a corrigenda or an amendment might have been published.

IEC Catalogue - webstore.iec.ch/catalogue
The stand-alone application for consulting the entire bibliographical information on IEC International Standards, Technical Specifications, Technical Reports and other documents. Available for PC, Mac OS, Android Tablets and iPad.

IEC publications search - www.iec.ch/searchpub
The advanced search enables to find IEC publications by a variety of criteria (reference number, text, technical committee,…). It also gives information on projects, replaced and withdrawn publications.

IEC Just Published - webstore.iec.ch/justpublished
Stay up to date on all new IEC publications. Just Published details all new publications released. Available online and also once a month by email.

Electropedia - www.electropedia.org
The world's leading online dictionary of electronic and electrical terms containing 20 000 terms and definitions in English and French, with equivalent terms in 16 additional languages. Also known as the International Electrotechnical Vocabulary (IEV) online.

IEC Glossary - std.iec.ch/glossary
65 000 electrotechnical terminology entries in English and French extracted from the Terms and Definitions clause of IEC publications issued since 2002. Some entries have been collected from earlier publications of IEC TC 37, 77, 86 and CISPR.

IEC Customer Service Centre - webstore.iec.ch/csc
If you wish to give us your feedback on this publication or need further assistance, please contact the Customer Service Centre: csc@iec.ch.

IECNORM.COM : Click to view the full PDF of IEC TR 61931:2010/AMD2:2017
Withdrawn

IEC TR 60919-1

Edition 3.0 2017-05

TECHNICAL REPORT

AMENDMENT 2

Performance of high-voltage direct current (HVDC) systems with line-commutated converters – Part 1: Steady-state conditions

Withdrawn
IECNORM.COM : Click to view the full PDF of IEC TR 60919-1:2010/AMD2:2017

INTERNATIONAL
ELECTROTECHNICAL
COMMISSION

ICS 29.200; 29.240.99

ISBN 978-2-8322-4351-0

Warning! Make sure that you obtained this publication from an authorized distributor.

® Registered trademark of the International Electrotechnical Commission

FOREWORD

This amendment has been prepared by subcommittee 22F: Power electronics for electrical transmission and distribution systems, of IEC technical committee 22: Power electronic systems and equipment.

The text of this amendment is based on the following documents:

DTR	Report on voting
22F/447/DTR	22F/452/RVDTR

Full information on the voting for the approval of this amendment can be found in the report on voting indicated in the above table.

The committee has decided that the contents of this amendment and the base publication will remain unchanged until the stability date indicated on the IEC website under "http://webstore.iec.ch" in the data related to the specific publication. At this date, the publication will be

- reconfirmed,
- withdrawn,
- replaced by a revised edition, or
- amended.

A bilingual version of this publication may be issued at a later date.

Withdrawn
IECNORM.COM : Click to view the full PDF of IEC TR 60919-1:2010/AMD2:2017

3 Types of HVDC systems

3.3 Monopolar earth return HVDC system

Replace the existing title by the following new title:

3.3 Monopolar HVDC system with earth return

Replace, in the first paragraph, the words "monopolar earth return system" *by* "monopolar HVDC system with earth return".

Figure 3 – Monopolar earth return system

Replace the existing title by the following new title:

Figure 3 – Monopolar HVDC system with earth return

3.4 Monopolar metallic return HVDC system

Replace the existing title by the following new title:

3.4 Monopolar HVDC system with metallic return

Add, after the fourth paragraph, the following new paragraph:

For metallic return scheme, DC fault current will flow into AC system and come back through neutral point of transformers installed in the converter station. This current may lead to the malfunction of protective relays installed in nearby stations, caused by the saturation of cores due to DC current. To prevent such malfunctions, insertion of neutral grounding resistor (small resistance) to transformers in converter station will be effective.

Figure 6 – Monopolar metallic return system

Replace the existing title by the following new title:

Figure 6 – Monopolar HVDC system with metallic return

3.5 Bipolar HVDC system with earth return

Replace, in the first paragraph, "Figure 7" by "Figure 7 (a)".

Figure 7 – Bipolar system

Replace the existing Figure 7, modified by IEC TR 60919-1/AMD1:2013, by the following new figure.

Withdrawn
IECNORM.COM : Click to view the full PDF of IEC TR 60919-1:2010/AMD2:2017

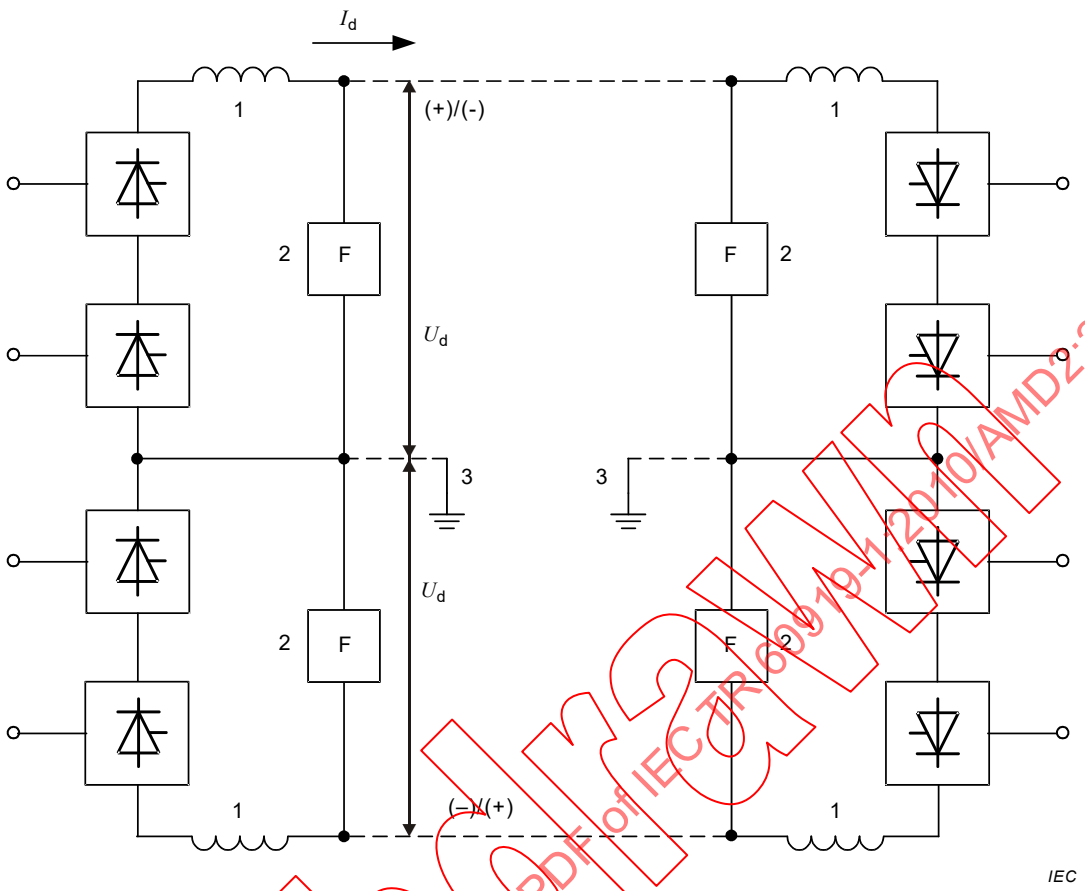

Figure 7 (a) – Bipolar HVDC system with earth return

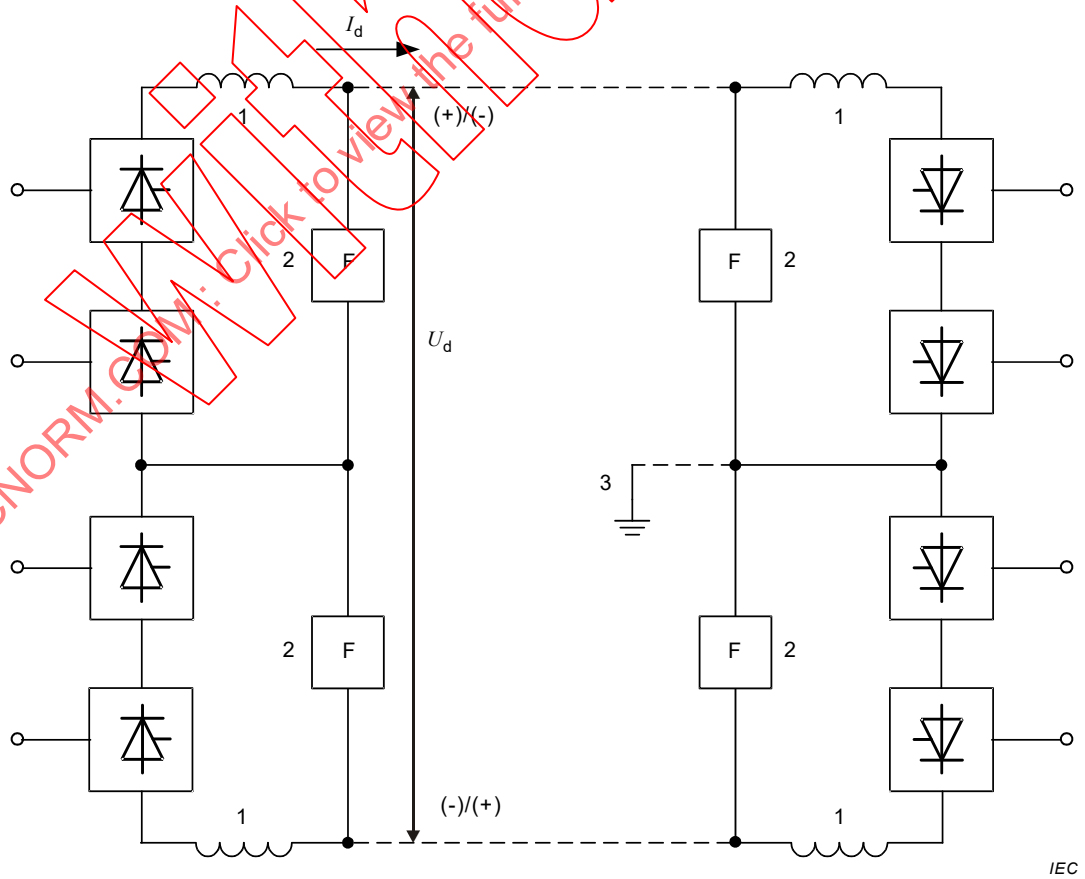

Figure 7 (b) – Rigid bipolar HVDC system

Withdrawn
IECNORM.COM : Click to view the full PDF of IEC TR 60919-1:2010/AMD2:2017

Key

1 DC reactor

2 DC filter

3 Earth electrodes

Figure 7 – Bipolar system

Add, after the fourth paragraph, the following new paragraph:

Most of the HVDC system utilises electrode line or metallic return conductor (cable) for d.c. current return path. However, as far as the balanced bipolar operation is always assured, these facilities can be eliminated. This scheme is called "rigid bipole HVDC system" configuration, as shown in Figure 7 (b). With this scheme, operation modes are limited but installation cost can be reduced.

3.6 Bipolar metallic return HVDC system

Replace the existing title by the following new title:

3.6 Bipolar HVDC system with metallic return

Replace, in the first sentence of the first paragraph, the words "bipolar metallic return HVDC system" *by* "bipolar HVDC system with metallic return".

Figure 9 – Bipolar metallic return HVDC system

Replace the existing title by the following new title:

Figure 9 – Bipolar HVDC system with metallic return

Add, at the end of the fourth paragraph, the following new sentence:

This configuration is also called a "dedicated metallic return" (DMR).

Add, after the fourth paragraph, the following new paragraph:

For metallic return scheme, d.c. fault current will flow into a.c. system and come back through neutral point of transformers installed in the converter station. This current may lead to the malfunction of protective relays installed in nearby stations, because of saturation due to d.c. current. To prevent such malfunctions, insertion of neutral grounding resistor (small resistance) to transformers in converter station will be effective.

3.7 Two 12-pulse groups per pole

Replace, in the last sentence of the second paragraph, the words "should be selected" *by* "may be preferred".

Add, after the fourth paragraph, the following new paragraphs:

For a large bipole capacity, two 12-pulse groups in series per pole may be considered. This means that when a forced or scheduled outage of a 12-pulse converter occurs, only 25 % of the capacity will be lost and the two poles can still operate with a balanced current (without earth current) for two 12-pulse groups in series connection, or operate with an unbalanced current (with earth /metallic return current) for two 12-pulse groups in parallel connection. If sufficient overload capability is available, full power or almost full power can be restored. The other advantages of this configuration are that two 12-pulse scheme can provide soft start and stop sequence and flexible utilization of the HVDC system with various combinations of converter groups.

IECNORM.COM : Click to view the full PDF of IEC TR 60919-1:2010/AMD2:2017
Withdrawn

DC switches will be necessary to bypass and remove any 12-pulse group from operation. The cost of such an arrangement, compared to one 12-pulse group per pole for the same total rating, would be expected to be higher.

3.8 Converter transformer arrangements

Add, after Figure 10, modified by IEC TR 60919-1/AMD1:2013, the following new paragraph:

Figure 10, with d.c. switch 3 (named as: MRTB and GRTS), is usually valid for rectifier station. The d.c. switch 3 is not necessary for the inverter station.

Add, after Figure 11, modified by IEC TR 60919-1/AMD1:2013, the following new paragraph:

It is not always needed to split the d.c. reactors, especially for parallel connection. The number and arrangement of d.c. reactors depend on the results of system studies and design.

Add, after 3.10, the following new subclause:

3.11 LCC/VSC hybrid bipolar system

In case one pole of LCC is combined with VSC pole, a hybrid bipolar system of LCC and VSC will be formed. For LCC/VSC hybrid bipolar system, special consideration shall be taken because power reversal of VSC system requires current reversal, whereas LCC changes voltage polarity. The combined operation of both systems will lead to excessive current on electrode line or return line for one of the power directions. In order to prevent this problem, switches for polarity reversal should be installed on the VSC converter, as depicted in Figure 26.

Adopted VSC for hybrid system shall be asymmetrical monopole configuration.

IECNORM.COM : Click to view the full PDF of IEC TR 60919-1:2010/AMD2:2017
Withdrawn

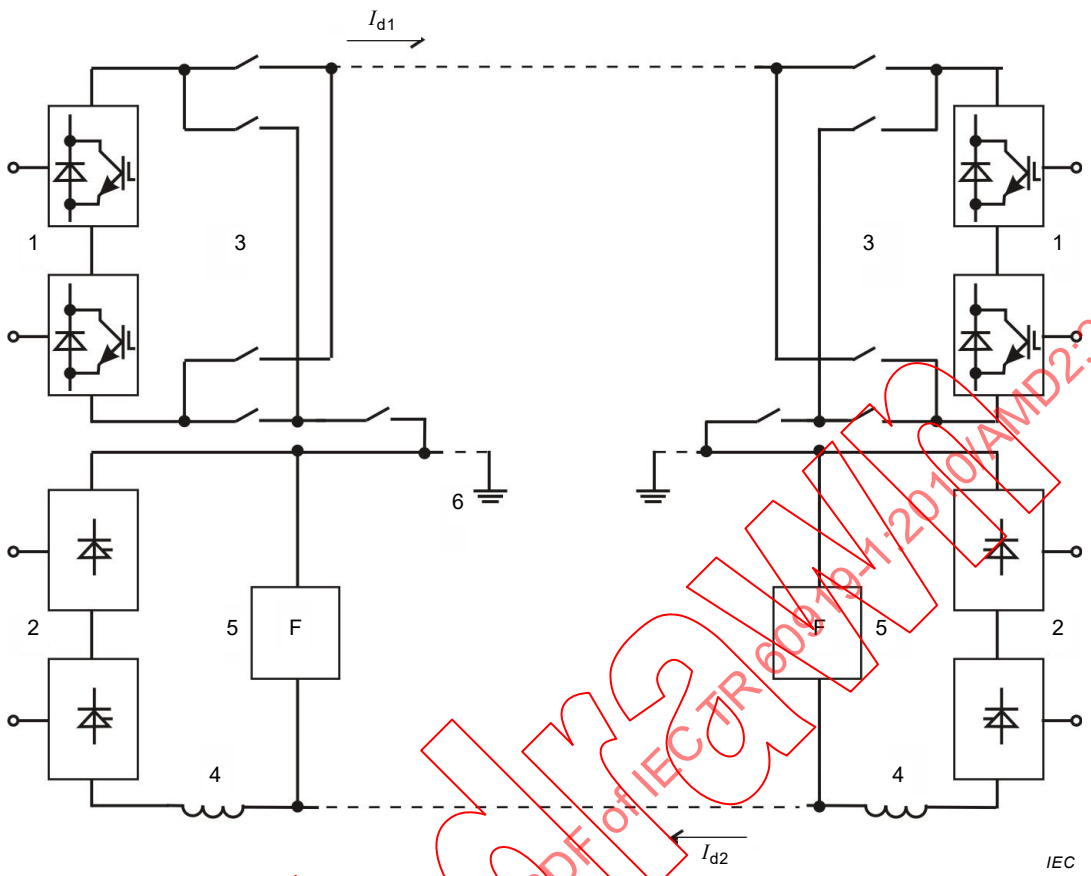

Key

1 voltage-sourced converter (VSC)

2 line-commutated converter (LCC)

3 polarity reversal switches

4 d.c. reactor

5 d.c filter

6 earth electrode

Figure 26 – LCC/VSC hybrid bipolar system

10.2.2 Electrical parameters

Replace, in 1), modified by IEC TR 60919-1/AMD1:2013, the words "two times of the fundamental frequency" *by* "the 49th harmonic of the fundamental frequency".

Replace, in 3), modified by IEC TR 60919-1/AMD1:2013, the words "two times of the fundamental frequency" *by* "the 49th harmonic of the fundamental frequency."

16.2 Filters

Replace, in the last paragraph, the reference "IEC/TR 62001" *by* "IEC 62001 (all parts)".

16.3 Interference disturbance criteria

Replace, in the key to Equation (11), *the reference* "IEC/TR 62001" *by* "IEC 62001 (all parts)".

17.3.4 Calculation of currents

Replace the existing subclause by the following new subclause:

Withdrawn
IECNORM.COM : Click to view the full PDF of IEC TR 60919-1:2010/AMD2:2017

For the purpose of meeting the performance criteria specified, the magnitude of the current at each frequency and at any point along the HVDC transmission line should be considered as the r.m.s. value of the contribution at that point from the sending end and from the receiving end of the HVDC transmission line, for the frequency being considered, using the following formula:

$$\mathrm{I}_{\mathrm{eq}} = \sqrt{\sum_{\mathrm{n}=1}^{\mathrm{n}=N} \left(H_n \times C_n \times I_n \right)^2} \tag{15}$$

where

I_{n} is the effective disturbing current at harmonic n (generally corresponding to residual mode current);

N is the maximum harmonic number to be considered;

C_{n} is the C-message weighting factor;

H_{n} is the weighting factor normalized to reference frequency (1 000 Hz) that accounts for the frequency dependence of mutual coupling, shielding and communication circuit balance at harmonic n.

Where the balanced mode harmonic currents are expected to contribute significantly to the induced noise, they shall be included in the calculation of I_{eq}. The effective disturbing current is then specified as:

$$\mathrm{I}_{\mathrm{n}} = \sqrt{\left(I_{rn}\right)^2 + \left(K_b \times I_{bn}\right)^2} \tag{16}$$

where

I_{rn} is the total residual mode current at harmonic n;

I_{bn} is the balanced mode current at harmonic n;

K_{b} is the ratio of balanced mode coupling to the residual mode coupling at reference frequency.

The typical values of equivalent disturbing current are in the range of 100 mA to 6 000 mA for normal operation.

19.3.2 Specification RFI limit and its verification

Replace the third paragraph, modified by IEC TR 60919-1:2010/AMD1:2013, by the following new paragraph:

The requirement should be specified as a graph of the maximum E-field in dB [µV/m] versus frequency for the frequency band 150 kHz to 1 GHz. There should be one graph for the substation limit and one graph for line limits. Suitable limits for the normal cases are given in CIGRÉ Technical Brochure 391, with justifications. Since the frequencies in the frequency range 9 kHz to 150 kHz are sparsely used, a requirement should only be specified in case any communication is in use in the vicinity of the HVDC substation or connecting lines. Requirements applied unnecessarily in this low frequency range will introduce extra cost in form of large filters.

Bibliography

Delete, in IEC 60700-1, the publication year "1998" *and the footnote.*

Delete, in IEC 61148, the publication year "1992", *and replace the word* "convertor" *by the word* "conversion".

Withdrawn
IECNORM.COM : Click to view the full PDF of IEC TR 60919-1:2010/AMD2:2017

Add, at the end of the existing title of IEC 61803, the words "with line-commutated converters".

Replace the reference number "IEC/TR 62001" *by* "IEC 62001 (all parts)".

Withdrawn
IECNORM.COM : Click to view the full PDF of IEC TR 60919-1:2010/AMD2:2017