IEC TR 63167

Edition 2.0 2024-08
REDLINE VERSION

TECHNICAL REPORT

colour inside

Assessment of contact current related to human exposure to electric, magnetic and electromagnetic fields

IECNORM.COM : Click to view the full PDF of IEC TR 63167:2024 RLV

IEC TR 63167:2024-08 RLV(en)

THIS PUBLICATION IS COPYRIGHT PROTECTED
Copyright © 2024 IEC, Geneva, Switzerland

All rights reserved. Unless otherwise specified, no part of this publication may be reproduced or utilized in any form or by any means, electronic or mechanical, including photocopying and microfilm, without permission in writing from either IEC or IEC's member National Committee in the country of the requester. If you have any questions about IEC copyright or have an enquiry about obtaining additional rights to this publication, please contact the address below or your local IEC member National Committee for further information.

IEC Secretariat
3, rue de Varembé
CH-1211 Geneva 20
Switzerland

Tel.: +41 22 919 02 11
info@iec.ch
www.iec.ch

About the IEC
The International Electrotechnical Commission (IEC) is the leading global organization that prepares and publishes International Standards for all electrical, electronic and related technologies.

About IEC publications
The technical content of IEC publications is kept under constant review by the IEC. Please make sure that you have the latest edition, a corrigendum or an amendment might have been published.

IEC publications search - webstore.iec.ch/advsearchform
The advanced search enables to find IEC publications by a variety of criteria (reference number, text, technical committee, …). It also gives information on projects, replaced and withdrawn publications.

IEC Just Published - webstore.iec.ch/justpublished
Stay up to date on all new IEC publications. Just Published details all new publications released. Available online and once a month by email.

IEC Customer Service Centre - webstore.iec.ch/csc
If you wish to give us your feedback on this publication or need further assistance, please contact the Customer Service Centre: sales@iec.ch.

IEC Products & Services Portal - products.iec.ch
Discover our powerful search engine and read freely all the publications previews, graphical symbols and the glossary. With a subscription you will always have access to up to date content tailored to your needs.

Electropedia - www.electropedia.org
The world's leading online dictionary on electrotechnology, containing more than 22 500 terminological entries in English and French, with equivalent terms in 25 additional languages. Also known as the International Electrotechnical Vocabulary (IEV) online.

IECNORM.COM : Click to view the full PDF of IEC 60167:2024 RLV

IEC TR 63167

Edition 2.0 2024-08
REDLINE VERSION

TECHNICAL REPORT

colour inside

Assessment of contact current related to human exposure to electric, magnetic and electromagnetic fields

IECNORM.COM : Click to view the full PDF of IEC TR 63167:2024 RLV

INTERNATIONAL
ELECTROTECHNICAL
COMMISSION

ICS 17.220.20

ISBN 978-2-8322-9537-3

Warning! Make sure that you obtained this publication from an authorized distributor.

® Registered trademark of the International Electrotechnical Commission

CONTENTS

FOREWORD 4
INTRODUCTION 6
1 Scope 7
2 Normative references 7
3 Terms and definitions 7
4 Abbreviated terms 8
5 Contact current in EMF ~~exposure~~ guidelines 8
6 Consideration in evaluating contact currents 9
6.1 General 9
6.2 Assumed situations of human exposure to contact current 9
6.2.1 General 9
6.2.2 Capacitive coupling (power line) 9
6.2.3 Inductive coupling (power line) 9
6.2.4 Induction heating equipment 10
6.2.5 Wireless power transfer (WPT) 10
6.2.6 Broadcasting 10
6.3 Methods of measurement of touch current used in electrical safety standards 10
6.3.1 General 10
6.3.2 IEC standards related to electrical safety 10
6.3.3 Modelling human body impedance 14
6.4 Proposed methods of measuring contact current 19
6.4.1 General 19
6.4.2 Contact current measurement using a human subject 20
6.4.3 Contact current measurement using a human equivalent impedance/circuit 20
6.4.4 Contact current calculated from measurement of open-circuit voltage 20
7 Consideration in standardization of evaluation method for contact current 21
Annexe A (informative) Contact current limits in international EMF guidelines 22
A.1 General 22
A.2 Reference levels based on electro-stimulation effects 22
A.3 Reference levels and a guidance based on thermal effects 24
Bibliography 26

Figure 1 – Time~~/~~ versus current zones of effects of AC currents (15 Hz to 100 Hz) on persons for a current path corresponding to left hand to feet (for explanation see Table 2) 13
Figure 2 – Measuring network for unweighted touch current 15
Figure 3 – Measuring network for touch current weighted for perception or startle-reaction [18] 16
~~Figure 4 – Simulated body impedance for contact current measurements shown in IEEE C95.3 [27] .....~~
Figure 4 – Impedances of various parts of the body proposed in IEC TS 62996 [10] for 1 kHz to 6 MHz 19
Figure 5 – Realistic computational 3D human body model and results of calculation of current density and pathway 21

IECNORM.COM : Click to view the full PDF of IEC TR 63167:2024 RLV

Table 1 – Selected IEC technical committees and standards related to electrical safety 12

Table 2 – Time~~/~~ versus current zones for AC 15 Hz to 100 Hz for hand to feet pathway – Summary of zones in Figure 1 13

Table A.1 – Reference levels in ICNIRP 2010 guidelines for time varying contact current from conductive object [1] 22

~~Table A.2 – Maximum permissible exposure (MPE) levels of contact current in IEEE safety standards [3], [4] .....~~

Table A.2 – Exposure reference levels (ERLs) of contact current based on electro-stimulation effects in IEEE Std C95.1-2019 [3] 23

Table A.3 – Exposure reference levels (ERLs) of contact current based on thermal effects in IEEE Std C95.1-2019 [3] 24

IECNORM.COM : Click to view the full PDF of IEC TR 63167:2024 RLV

INTERNATIONAL ELECTROTECHNICAL COMMISSION

ASSESSMENT OF CONTACT CURRENT RELATED TO HUMAN EXPOSURE TO ELECTRIC, MAGNETIC AND ELECTROMAGNETIC FIELDS

FOREWORD

1) The International Electrotechnical Commission (IEC) is a worldwide organization for standardization comprising all national electrotechnical committees (IEC National Committees). The object of IEC is to promote international co-operation on all questions concerning standardization in the electrical and electronic fields. To this end and in addition to other activities, IEC publishes International Standards, Technical Specifications, Technical Reports, Publicly Available Specifications (PAS) and Guides (hereafter referred to as "IEC Publication(s)"). Their preparation is entrusted to technical committees; any IEC National Committee interested in the subject dealt with may participate in this preparatory work. International, governmental and non-governmental organizations liaising with the IEC also participate in this preparation. IEC collaborates closely with the International Organization for Standardization (ISO) in accordance with conditions determined by agreement between the two organizations.

2) The formal decisions or agreements of IEC on technical matters express, as nearly as possible, an international consensus of opinion on the relevant subjects since each technical committee has representation from all interested IEC National Committees.

3) IEC Publications have the form of recommendations for international use and are accepted by IEC National Committees in that sense. While all reasonable efforts are made to ensure that the technical content of IEC Publications is accurate, IEC cannot be held responsible for the way in which they are used or for any misinterpretation by any end user.

4) In order to promote international uniformity, IEC National Committees undertake to apply IEC Publications transparently to the maximum extent possible in their national and regional publications. Any divergence between any IEC Publication and the corresponding national or regional publication shall be clearly indicated in the latter.

5) IEC itself does not provide any attestation of conformity. Independent certification bodies provide conformity assessment services and, in some areas, access to IEC marks of conformity. IEC is not responsible for any services carried out by independent certification bodies.

6) All users should ensure that they have the latest edition of this publication.

7) No liability shall attach to IEC or its directors, employees, servants or agents including individual experts and members of its technical committees and IEC National Committees for any personal injury, property damage or other damage of any nature whatsoever, whether direct or indirect, or for costs (including legal fees) and expenses arising out of the publication, use of, or reliance upon, this IEC Publication or any other IEC Publications.

8) Attention is drawn to the Normative references cited in this publication. Use of the referenced publications is indispensable for the correct application of this publication.

9) IEC draws attention to the possibility that the implementation of this document may involve the use of (a) patent(s). IEC takes no position concerning the evidence, validity or applicability of any claimed patent rights in respect thereof. As of the date of publication of this document, IEC had not received notice of (a) patent(s), which may be required to implement this document. However, implementers are cautioned that this may not represent the latest information, which may be obtained from the patent database available at https://patents.iec.ch. IEC shall not be held responsible for identifying any or all such patent rights.

This redline version of the official IEC Standard allows the user to identify the changes made to the previous edition IEC TR 63167:2018. A vertical bar appears in the margin wherever a change has been made. Additions are in green text, deletions are in strikethrough red text.

IECNORM.COM : Click to view the full PDF of IEC TR 63167:2024 RLV

IEC TR 63167 has been prepared by IEC technical committee 106: Methods for the assessment of electric, magnetic and electromagnetic fields associated with human exposure. It is a Technical Report.

This second edition cancels and replaces the first edition published in 2018. This edition constitutes a technical revision.

This edition includes the following significant technical changes with respect to the previous edition:

a) revised in accordance with the latest revision of international EMF guidelines;

b) revised in accordance with updates of relevant IEC standards on electrical safety.

The text of this Technical Report is based on the following documents:

Draft	Report on voting
106/641/DTR	106/656/RVDTR

Full information on the voting for its approval can be found in the report on voting indicated in the above table.

The language used for the development of this Technical Report is English.

This document was drafted in accordance with ISO/IEC Directives, Part 2, and developed in accordance with ISO/IEC Directives, Part 1 and ISO/IEC Directives, IEC Supplement, available at www.iec.ch/members_experts/refdocs. The main document types developed by IEC are described in greater detail at www.iec.ch/publications.

The committee has decided that the contents of this document will remain unchanged until the stability date indicated on the IEC website under webstore.iec.ch in the data related to the specific document. At this date, the document will be

- reconfirmed,
- withdrawn, or
- revised.

IMPORTANT – The "colour inside" logo on the cover page of this document indicates that it contains colours which are considered to be useful for the correct understanding of its contents. Users should therefore print this document using a colour printer.

IECNORM.COM : Click to view the full PDF of IEC TR 63167:2024 RLV

INTRODUCTION

In the guidelines limiting human exposure to electric, magnetic and electromagnetic fields (EMF guidelines), limits or a guidance for the contact current are given to avoid adverse indirect effects, i.e. electric shocks and burn hazards caused by contact with a conductive object located in an electric field or magnetic field or both, when the object has an electric potential owing to electric or magnetic induction to the object.

At the moment, no standardized method for evaluating the contact current, in the context of human exposures to the above fields has been well established. On the other hand, there is a vast amount of knowledge, as well as many standards and regulations on the issue of electrical safety (i.e. direct contact with live part of conductive object) to avoid severe electric shock hazards. Therefore, the evaluation methods used in the field of electrical safety ~~might~~ can be useful references. This document summarizes general information on the assessment of contact current related to human exposure to electric, magnetic and electromagnetic fields.

IECNORM.COM : Click to view the full PDF of IEC TR 63167:2024 RLV

ASSESSMENT OF CONTACT CURRENT RELATED TO HUMAN EXPOSURE TO ELECTRIC, MAGNETIC AND ELECTROMAGNETIC FIELDS

1 Scope

This document, which is a Technical Report, provides general information on the assessment of contact current related to human exposure to electric, magnetic and electromagnetic fields. The contact currents in this context occur when a human body comes into contact with a ~~not electrified~~ conductive object that is non-electrified but exposed to an electric field or magnetic field or both at a different electric potential owing to electric ~~and/~~or magnetic induction to the object. This is distinguished from the issue of electrical safety where contact with live parts of a conductive object is dealt with.

In reference to the international EMF guidelines [1], [2], and [3][1], the frequency range of contact current covered in this document is DC to 110 MHz, and only steady-state (continuous) contact currents are covered. Transient contact currents (spark discharges) which ~~may~~ can occur immediately before the contact with the object are not covered.

2 Normative references

There are no normative references in this document.

3 Terms and definitions

For the purposes of this document, the following terms and definitions apply.

ISO and IEC maintain terminology databases for use in standardization at the following addresses:

- IEC Electropedia: available at https://www.electropedia.org/
- ISO Online browsing platform: available at https://www.iso.org/obp

3.1
contact current
~~current flowing into the body resulting from contact with a conductive object in an electric, magnetic or electromagnetic field~~

<to human exposure> current flowing through the body resulting from contact with an insulated conductive object that has been energized in an electric, magnetic or electromagnetic field or from an insulated body that has been energized in an electric, magnetic or electromagnetic field and is in contact with a grounded conductive object

~~**3.2**~~
~~**electric field strength**~~
~~magnitude of a field vector at a point that represents the force (F) on an infinitely small charge (q) divided by the charge~~

[1] Numbers in square brackets refer to the Bibliography.

IECNORM.COM : Click to view the full PDF of IEC TR 63167:2024 RLV

3.2
exposure
<to human>~~ state~~ situation that occurs when a person is subjected to an electric, magnetic or electromagnetic field, or to a contact current other than those originating from physiological processes in the body and other natural phenomena

3.3
indirect effect
~~effect resulting from physical contact between a person and a not electrified object, such as a metallic structure in an electric, magnetic or electromagnetic field, at an electric potential that is at least at a point of the object different from the potential of the person~~

effect arising when an object present in an electromagnetic field becomes a cause of safety or health hazard

3.4
touch current
electric current~~ flowing~~ passing through a human body when it touches one or more accessible and energized parts of an installation or of equipment, or object, used in the field of electrical safety

Note 1 to entry: The term "leakage current" had also been used as a synonym for touch current in the field of electrical safety.

[SOURCE: IEC 60050-195:2021, 195-05-21, modified – In the definition, "or through livestock" has been deleted, "and energized" has been added, "or object, used in the field of electrical safety" has been added. Note 1 to entry has been added.]

3.5
spark discharge
transfer of current through an air gap prior to making contact with another conductive object at a different potential

4 Abbreviated terms

3D	three dimensional
AC	alternating current
AM	amplitude modulation
DC	direct current
EMF	electric, magnetic or electromagnetic field
EV	electric vehicle
FM	frequency modulation
ICNIRP	International Commission on Non-Ionizing Radiation Protection
IEEE	Institute of Electrical and Electronics Engineers
IH	induction heating
~~MPE~~	~~maximum permissible exposure~~
MRI	magnetic resonance imaging
PC	personal computer
RF	radio frequency
WPT	wireless power transfer

5 Contact current in EMF~~ exposure~~ guidelines

Clause 5 overviews contact currents described in the EMF guidelines [1], [2], and [3].

IECNORM.COM : Click to view the full PDF of IEC TR 63167:2024 RLV

In the frequency range up to approximately 10 MHz (predominantly up to 100 kHz), the flow of electric current from an object in a field to the body of an individual ~~may~~ can result in the stimulation of muscles ~~and/~~or peripheral nerves. With increasing current, this ~~may~~ can be manifested as perception, pain from an electric shock ~~and/~~or burn, the inability to release the object, difficulty in breathing and, at higher currents, cardiac ventricular fibrillation.

In the frequency range of about 100 kHz to 110 MHz, shocks and burns can result either from an individual touching an ungrounded metal object that has acquired a charge in a field or from contact between a charged individual and a grounded metal object.

In the EMF guidelines, reference levels or a guidance for steady state (continuous) contact current are given for frequencies up to 110 MHz to avoid shock and burn hazards (see Annex A) , rather than to avoid ventricular fibrillation. ~~The reference levels are not intended to avoid ventricular fibrillation, which is the basis of standards for electrical safety.~~ The upper frequency of 110 MHz is the upper frequency limit of the FM broadcast band. Here, the transient currents resulting from spark discharges [4], which can occur when an individual comes into very close proximity with an object at a different electric potential, are not considered in the reference levels of contact current. Instead, the effect of spark discharge is considered in the reference levels of electric field exposure for the general public by including a sufficient margin to prevent surface electric-charge effects such as perception by most people.

~~It is noteworthy that different methods for evaluation of conformity to the guidelines are provided for multiple-frequency exposure for low-frequency (below 100 kHz) and high-frequency (above 10 kHz) ranges. In the frequencies between 10 kHz and 100 kHz, both evaluation methods are applied (see Annex A).~~

6 Consideration in evaluating contact currents

6.1 General

Clause 6 describes items to be considered in evaluating contact currents:

a) assumed situations of human exposure to a contact current (6.2);

b) methods for evaluating a touch current used in electrical safety standards for references (6.3);

c) some proposed methods for evaluating contact currents (6.4).

6.2 Assumed situations of human exposure to contact current

6.2.1 General

There are several situations to be considered for human exposure to a contact current. Different cases ~~have to be~~ are considered depending on the type of coupling between fields (electric or magnetic) and human bodies~~/~~ or objects.

6.2.2 Capacitive coupling (power line)

An electric field induces, by capacitive coupling (electrostatic induction), a voltage in a person or a conductive object that is isolated from the ground. When a person touches an object having a different potential, a contact current flows so as to cancel the potential difference. This can be categorized into two cases: (a) an isolated person touches a grounded object and (b) a grounded person touches an isolated object (especially a large object such as a bus or a truck) [5]. Comprehensive studies have been carried out for typical cases encountered under overhead transmission lines [6].

6.2.3 Inductive coupling (power line)

By inductive coupling (electromagnetic induction), a magnetic field induces a voltage, especially in long conductive objects such as telecommunication lines, fences and gas pipelines, having

IECNORM.COM : Click to view the full PDF of IEC TR 63167:2024 RLV

at least one reasonable grounding, when they are installed close to and parallel to magnetic field sources such as overhead power lines [7]. When a person touches the object, a contact current flows. In particular, in the case of fault condition in overhead power lines, the limit values for the open-circuit voltage in nearby telecommunication lines are set by an international regulation-setting body [8]. In contrast to the capacitive coupling, grounding a conductive object at a large distance from the point of contact will actually increase the amplitude of the open-circuit voltage, thereby increasing the contact current.

6.2.4 Induction heating equipment

Induction heating (IH) equipment is heating equipment using the Joule effect produced by magnetically induced currents. For a domestic IH cooker, a metal pan or pot is heated by a magnetic field, and when a person touches a conductive part of the pan or pot, a contact current can occur typically in the frequency ranges of around 20 kHz to 100 kHz. The method used to evaluate human exposure to magnetic fields produced by IH cookers is standardized in IEC 62233 [9]; however, the contact currents are not mentioned in IEC 62233. ~~Note that it may be appropriate to categorize this exposure situation as an issue of electrical safety.~~

For industrial IH equipment, a method of evaluating touch current in terms of electrical safety is ~~being standardized in IEC TC 27 (industrial electroheating and electromagnetic processing)~~ specified in IEC TS 62996 [10] for the frequency ranges between 1 kHz and 6 MHz.

6.2.5 Wireless power transfer (WPT)

A wireless power transfer (WPT) system is a system capable of transferring power between a transmitter and receiver using wireless technologies including electromagnetic induction, resonance, or capacitance. They are used for wirelessly charging mobile phones, tablet PCs, electric vehicles (EVs) and, so forth. There are several types of WPT, and the frequency ranges ~~is~~ can vary from tens of kilohertz to tens of megahertz. When a conductive object is placed in the immediate vicinity of a system and a person touches it, a contact current can occur, such as by touching the metal body of an EV when charging with a WPT charging system [11]. ~~As touching the metal body of an EV when charging using a WPT charging system may be the case [12], it may be appropriate to categorize the exposure situation as an issue of electrical safety.~~ Details regarding exposure assessment methods for WPT systems are reported in IEC TR 62905 [12] and IEC PAS 63184 [13]. In ~~IEC TR 62905~~ these publications, contact currents are considered for the conditions where an ungrounded or grounded metal object is placed in the vicinity of WPT systems.

6.2.6 Broadcasting

Burns can occur at a point of contact between a human body and a metallic structure that is exposed to RF electromagnetic fields from nearby sources such as AM broadcast antennas. The contact point between the body and the structure often has a small area and the current injected into the body is concentrated near this point. This can result in localized current ~~density near the contact sufficiently~~ densities strong enough to raise the local temperature and cause surface or deep burns [14].

6.3 Methods of measurement of touch current used in electrical safety standards

6.3.1 General

When considering the evaluation method for contact currents in the context of human exposure to electric, magnetic and electromagnetic fields, existing IEC standards related to electrical safety ~~may be~~ can provide some useful ~~inputs~~ guidance.

6.3.2 IEC standards related to electrical safety

There are several IEC technical committees in charge of electrical safety. These include:

– TC 64: Electrical installations and protection against electric shock;

IECNORM.COM : Click to view the full PDF of IEC TR 63167:2024 RLV

- TC 108: Safety of electronic equipment within the field of audio/video, information technology and communication technology;
- TC 61: Safety of household and similar electrical appliances;
- TC 99: System engineering and erection of electrical power installations in systems with nominal voltages above 1 kV AC and 1,5 kV DC, particularly concerning safety aspects;
- TC 66: Safety of measuring, control and laboratory equipment;
- TC 62/SC 62A: Common aspects of electrical equipment used in medical practice.

Table 1 summarizes the selected standards related to the electrical safety and the committees in which they were created. Note that the "touch voltage", the product of the touch current and the assumed body impedance, is commonly used as a parameter for setting limits for touch currents.

In IEC ~~TS~~ 60479-1 [15], a diagram of physiological effects for different touch currents and durations is shown (reproduced in Figure 1 and Table 2), which is commonly referenced in electrical safety standards as a basis for limiting touch currents.

IECNORM.COM : Click to view the full PDF of IEC TR 63167:2024 RLV

Table 1 – Selected IEC technical committees and standards related to electrical safety

IEC TC	IEC standards related to electrical safety	Notes
TC 108, Safety of electronic equipment within the field of audio/video, information technology and communication technology	IEC 60065:2014, Audio, video and similar electronic apparatus – Safety requirements [16]	Stipulates touch voltage limits
	IEC 60950-1:2005, Information technology equipment – Safety – Part 1: General requirements IEC 60950-1:2005/AMD1:2009 IEC 60950-1:2005/AMD2:2013 [17]	Stipulates touch current limits
	IEC 60990:2016, Methods of measurement of touch current and protective conductor current [18]	Stipulates measuring method of touch current
	IEC 62368-1:~~2014~~2023, Audio/video, information, and communication technology equipment – Part 1: Safety requirements [19]	~~"Hazard based safety engineering (HBSE)" is adopted~~ Stipulates prospective touch voltage and touch current limits
TC 61, Safety of household and similar electrical appliances	IEC 60335-1:~~2010~~2020, Household and similar electrical appliances – Safety – Part 1: General requirements [20] ~~IEC 60335-1:2010/AMD1:2013~~ ~~IEC 60335-1:2010/AMD2:2016 [18]~~	Stipulates touch current limits
TC 64, Electrical installations and protection against electric shock	IEC 60364-4-41:2005, Low-voltage electrical installations – Part 4-41: Protection for safety – Protection against electric shock [21] IEC 60364-4-41:2005/AMD1:2017	
	IEC ~~TS~~ 60479-1:~~2005~~2018, Effects of current on human beings and livestock – Part 1: General aspects [15] ~~IEC TS 60479-1:2005/AMD1:2016 [20]~~	A diagram of physiological effects for different body currents and durations is shown
	IEC ~~TS~~ 60479-2:~~2017~~2019, Effects of current on human beings and livestock – Part 2: Special aspects [22]	
	IEC 61140:2016, Protection against electric shock – Common aspects for installation and equipment [23]	
	IEC TS 61201:2007, Use of conventional touch voltage limits – Application guide [24]	
TC 99, Insulation co-ordination and system engineering of high voltage electrical power installations above 1,0 kV AC and 1,5 kV DC	IEC 61936-1:~~2010~~2021, Power installations exceeding 1 kV AC and 1,5 kV DC – Part 1: ~~Common rules~~ AC [25] ~~IEC 61936-1:2010/AMD1:2014~~	Stipulates touch voltage limits
TC 66, Safety of measuring, control and laboratory equipment	IEC 61010-1:2010, Safety requirements for electrical equipment for measurement, control, and laboratory use – Part 1: General requirements IEC 61010-1:2010/AMD1:2016 [26]	Stipulates touch current limits
TC 62/SC 62A, Common aspects of ~~electrical equipment used in medical practice~~ medical equipment, software, and systems	IEC 60601-1:2005, Medical electrical equipment – Part 1: General requirements for basic safety and essential performance IEC 60601-1:2005/AMD1:2012 IEC 60601-1:2005/AMD2:2020 [27]	Stipulates "leakage current" limits

IECNORM.COM : Click to view the full PDF of IEC TR 63167:2024 RLV

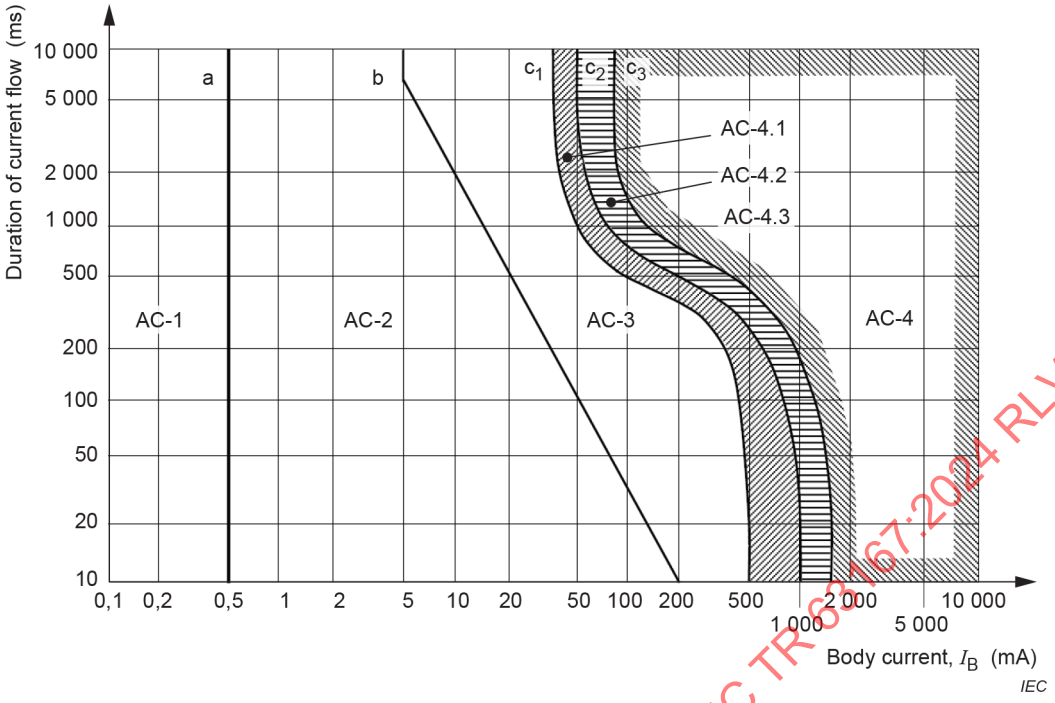

SOURCE: Figure 20 in IEC 60479-1:2018 [15].

Figure 1 – Time~~/~~ versus current zones of effects of AC currents (15 Hz to 100 Hz) on persons for a current path corresponding to left hand to feet (for explanation see Table 2)

Table 2 – Time~~/~~ versus current zones for AC 15 Hz to 100 Hz for hand to feet pathway – Summary of zones in Figure 1

Zones	Boundaries	Physiological effects
AC-1	Up to 0,5 mA curve a	Perception possible but usually no "startled" reaction
AC-2	0,5 mA up to curve b	Perception and involuntary muscular contractions likely but usually no harmful electrical physiological effects
AC-3	Curve b and above	Strong involuntary muscular contractions. Difficulty in breathing. Reversible disturbances of heart function. Immobilization ~~may~~ can occur. Effects increasing with current magnitude. Usually, no organic damage to be expected
AC-4 [a]	Above curve c_1	Patho-physiological effects ~~may~~ can occur such as cardiac arrest, breathing arrest, and burns or other cellular damage. Probability of ventricular fibrillation increasing with current magnitude and time
	Between curves c_1 and c_2	AC-4.1 Probability of ventricular fibrillation increasing up to about 5 %
	Between curves c_2 and c_3	AC-4.2 Probability of ventricular fibrillation up to about 50 %
	Beyond curve c_3	AC-4.3 Probability of ventricular fibrillation above 50 %

[a] For durations of current flow below 200 ms, ventricular fibrillation is only initiated within the vulnerable period if the relevant thresholds are surpassed. As regards ventricular fibrillation, Figure 1 relates to the effects of current which flows in the path left hand to feet. For other current paths, the heart current factor ~~has to be~~ is considered.

SOURCE: Table 11 in IEC 60479-1:2018 [15].

IECNORM.COM : Click to view the full PDF of IEC TR 63167:2024 RLV

6.3.3 Modelling human body impedance

6.3.3.1 General

An impedance or an equivalent circuit of the human body is needed when deriving a touch voltage from a permissible touch current. In addition, when measuring touch or contact current, an appropriate circuit ~~should be~~ is standardized. The following considerations have been made regarding the standardization of electrical safety.

6.3.3.2 Dependence of human impedance on touch voltage

In IEC ~~TS~~ 60479-1 [15], it is shown that the impedance of the human body varies with the touch voltage, and data on this relationship are provided. In addition, the impedance of the human body for different current paths is also considered.

6.3.3.3 Frequency characteristics

In IEC 60990 [18], circuits that simulate the frequency characteristics of human body impedance are shown for the measurement of touch currents to be used for frequencies up to 1 MHz. The circuit shown in Figure 2 is for an "unweighted" touch current to be adopted for burns, while the circuit shown in Figure 3, which includes a weighting circuit, considers the human response of perception or reaction.

A similar circuit is also shown in ~~IEEEC 95.3 [27] (Figure 4)~~ IEEE Std C95.3™-2021 [28]. In IEEE C95.3, a simulated body impedance (standard load) that can be inserted in the measurement circuit when measuring the contact current is shown.

IECNORM.COM : Click to view the full PDF of IEC TR 63167:2024 RLV

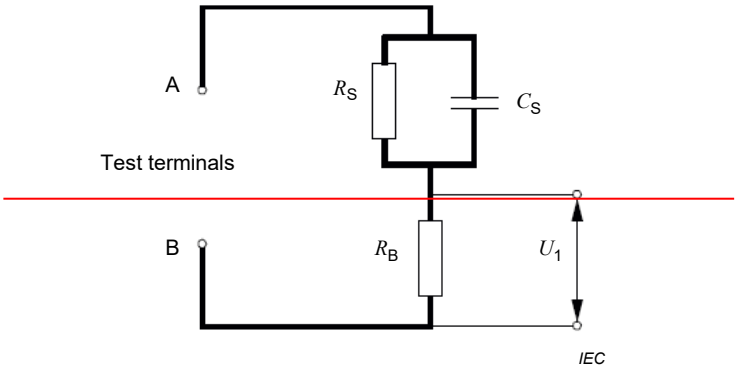

~~**Key**~~

~~R_S 1 500 Ω~~

~~R_B 500 Ω~~

~~C_S 0,22 µF~~

~~Unweighted touch current = $\frac{U_1}{500}$ (RMS value)~~

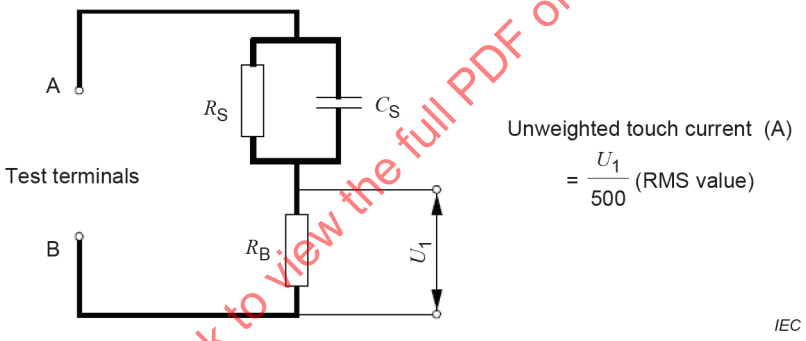

Key

R_S = 1 500

R_B = 500

C_S = 0,22

R resistance (Ω)

C capacitance (µF)

U voltage (V)

SOURCE: Figure 3 in IEC 60990:2016 [18].

Figure 2 – Measuring network for unweighted touch current ~~[16]~~

IECNORM.COM : Click to view the full PDF of IEC TR 63167:2024 RLV

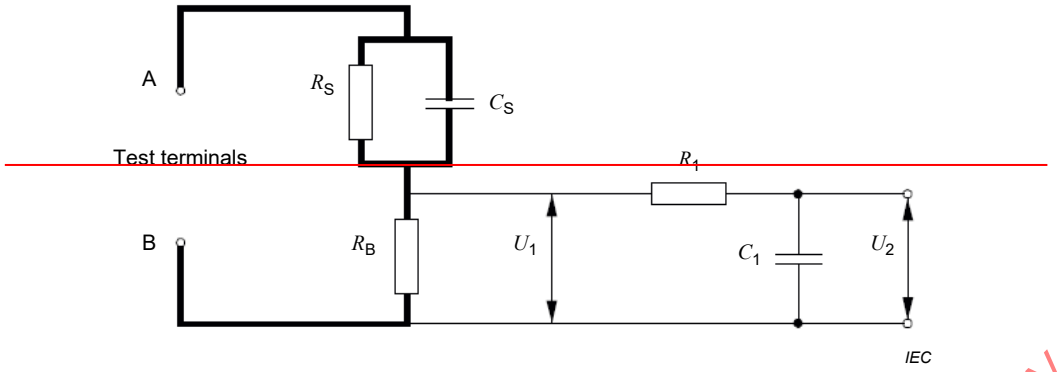

~~**Key**~~

~~R_S 1 500 Ω~~ ~~R_1 10 000 Ω~~

~~R_B 500 Ω~~ ~~C_1 0,022 µF~~

~~C_S 0,22 µF~~

~~Weighted touch current (perception or startle-reaction) = $\frac{U_2}{500}$ (peak value)~~

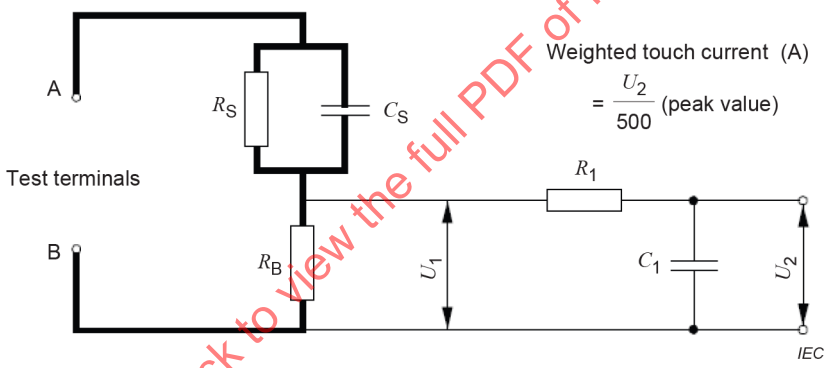

Key

R_S = 1 500

R_B = 500

C_S = 0,22

R_1 = 10 000

C_1 = 0,022

R resistance (Ω)

C capacitance (µF)

U voltage (V)

SOURCE: Figure 4 in IEC 60990:2016 [18].

Figure 3 – Measuring network for touch current weighted for perception or startle-reaction [18]

IECNORM.COM : Click to view the full PDF of IEC TR 63167:2024 RLV

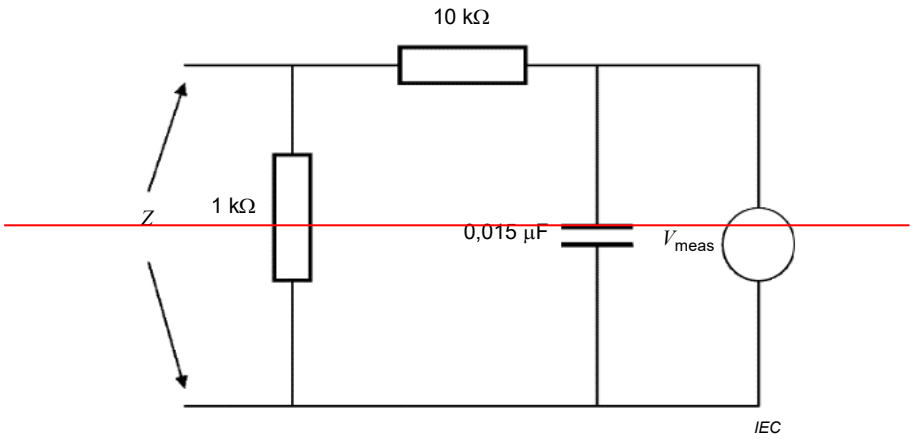

~~**Figure 4 – Simulated body impedance for contact current measurements shown in IEEE C95.3 [27]**~~

6.3.3.4 Consideration of touching boundary (skin impedance and contact area)

Well-investigated circuits for the human body impedance considering electrodes, skin impedances and spreading impedances have also been proposed for the frequency ranges from 10 kHz to 10 MHz [29] and from 75 kHz to 15 MHz [30] based on measurements made on human subjects. In IEC TS 62996 [10], which deals with the electrical safety of industrial electroheating and electromagnetic processing equipment, the circuit proposed in [29] was adopted with minor modification for frequencies from 1 kHz to 6 MHz.

In addition, the area of contact is stipulated in the safety standards to properly simulate the touching condition in measurements. In the proposed circuits in [10] (Figure 4), [29] and [30], "grip" and "finger" contacts can be considered. In the EMF guidelines (see Annex A), the assumed conditions of contact are "point contact" (area not specified) in ICNIRP guidelines [1], and "touch contact" with a contact area of 1 cm^2 and "grasping contact" (applicable only for ~~a controlled environment~~ "persons permitted in restricted environments") with a contact area of 15 cm^2 for the IEEE safety standard [3].

IECNORM.COM : Click to view the full PDF of IEC TR 63167:2024 RLV

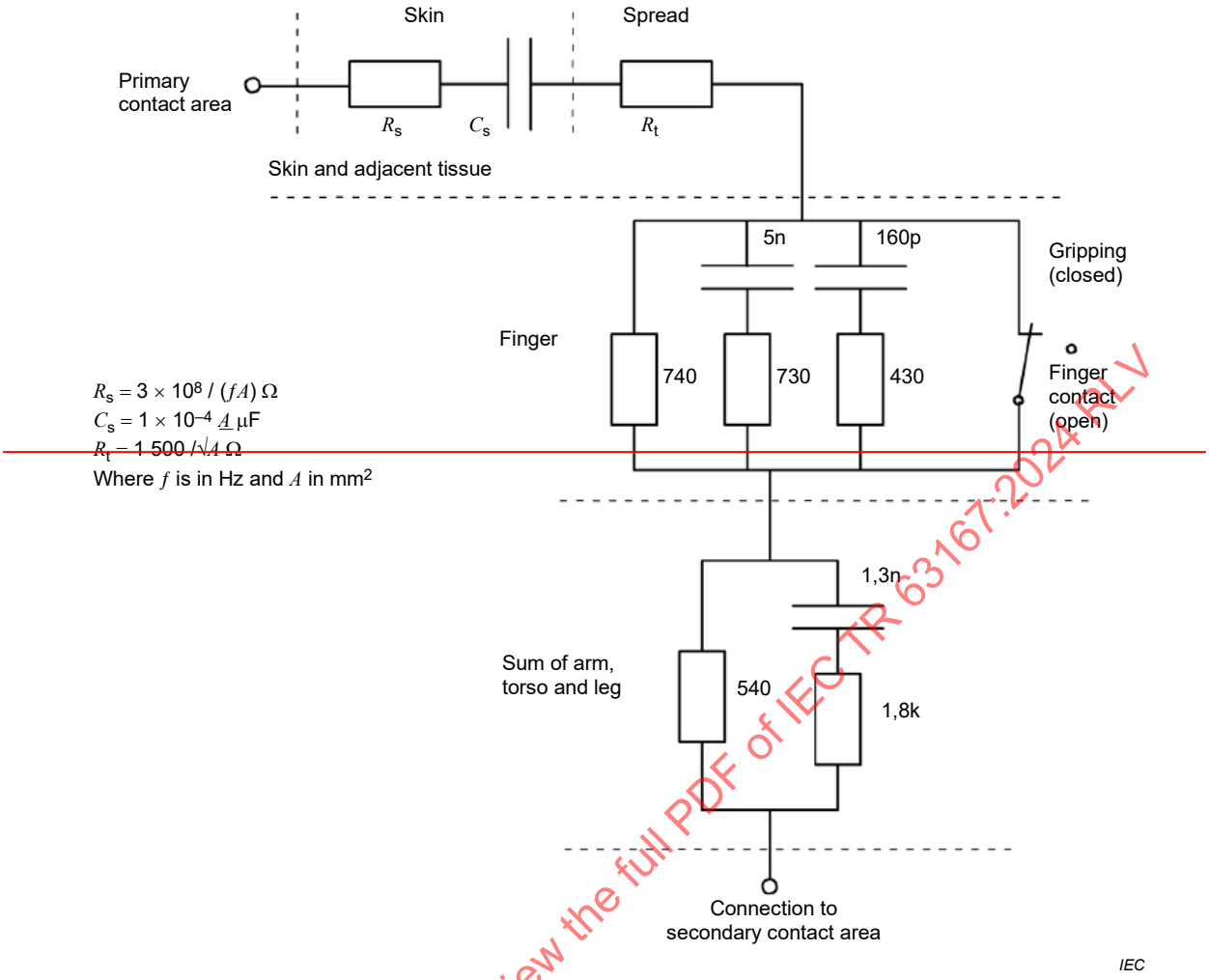

IECNORM.COM : Click to view the full PDF of IEC TR 63167:2024 RLV

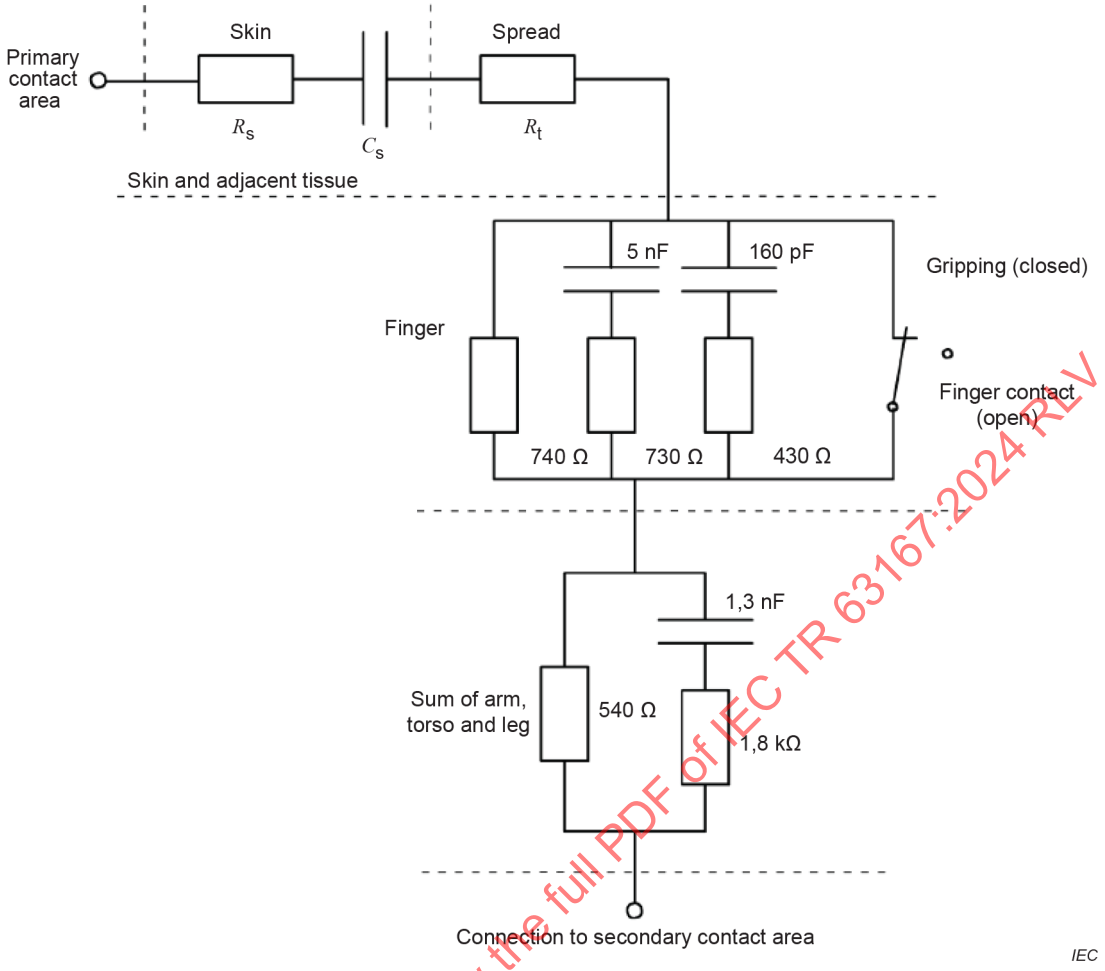

Key

$R_s = (3 \times 10^8) \cdot f \cdot A$

$C_s = (1 \times 10^{-4}) \cdot A$

$R_t = 1\,500 \cdot A^{-1/2}$

where

R_s, R_t is the impedance in units of Ω;

C_s is the capacitance, in units of μF;

A is the area of contact, in units of mm^2;

f is the frequency, in units of Hz.

SOURCE: Kanai et al. [29]. Reproduced with permission of IEEE.

Figure 4 – Impedances of various parts of the body proposed in IEC TS 62996 [10] for 1 kHz to 6 MHz

6.4 Proposed methods of measuring contact current

6.4.1 General

In 6.4, possible evaluation methods for the measurement of contact currents (or contact voltages) are described. To estimate the contact current, the methods in 6.4.2, 6.4.3 and 6.4.4 can be applied.

IECNORM.COM : Click to view the full PDF of IEC TR 63167:2024 RLV

6.4.2 Contact current measurement using a human subject

~~It is straightforward to measure a contact current directly using a human subject itself for an exposure situation to be tested; however, special care must be taken to ensure the safety of the subject to avoid electric shock. This method is considered in Annex D of IEC 62311:2007, a generic IEC standard for EMF exposure [30]. For this case, a clamp-on current sensor (current transformer) can be used to measure the contact current flowing into a hand in contact with a conductive object.~~ The contact current exposure situation can be measured using a human subject; however, it is important to take special care to ensure the safety of the subject to avoid electric shock. For this case, a clamp-on current sensor (current transformer) can be used to measure the contact current flowing into a hand in contact with a conductive object. An alternative approach would be to use a pistol grip device held in the operator's hand with the tip of the device making contact with the conductive object which protects the operator from spark discharge to the body surface. Current is measured within the device, and the broad contact of the operator's palm with the device dilutes the current density from the device to the operator over a large skin area. Another proposed method is measurement of the voltage difference between points of concern on a human body [31]. In this case, the contact current can be calculated from the obtained voltage difference and information on the impedance of the body between the points.

6.4.3 Contact current measurement using a human equivalent impedance/circuit

Considering the safety of human subjects and the repeatability of measurements, it is more suitable to use an impedance or a circuit that simulates the human body as a standardized measurement method for contact currents. The human-equivalent circuits shown in 6.3.3 can be used for this purpose.

In addition, for standardization, the area of the contact and the grounding condition ~~should~~ are also ~~be~~ specified to ensure repeatability.

There ~~are~~ is some ~~products~~ measurement equipment that ~~are~~ is commercially available, for frequencies of 3 kHz to 3 MHz and for frequencies from 40 Hz to 110 MHz, for example. These instruments have a human equivalent circuit and provide a flat metal plate used as a ground plane. One of these instruments is capable of choosing a grasp or touch contact, while the other can measure the contact current through a real human body.

6.4.4 Contact current calculated from measurement of open-circuit voltage

An alternative method is to measure the open-circuit voltage (contact voltage) of a conductive object to be touched instead of the measurement of a contact current. The contact current can then be obtained by a calculation using the obtained voltage and information on the human-equivalent circuit.

For the calculation, the human-equivalent circuits shown in 6.3.3 can be used. In addition, more realistic human models with a few millimetre resolution have been developed for numerical calculation [32], [33], [34], [35], [36], [37], and these models can be applied for this purpose. The realistic computational 3D human body model is derived from 3D imaging technology such as MRI and CT scans, and the images are then meshed into voxels for numerical analysis. Such model and methodology can provide much more precise results than the simple circuit model. A typical human body model grasping an energized metal electrode is shown in Figure 5. The figure also shows the current density plots and current pathways that result through the computational human body using typical numerical electromagnetic simulation tools. When including such kind of a realistic human model into a standard, the detail of the model ~~should be transparent~~ is specified.

IECNORM.COM : Click to view the full PDF of IEC TR 63167:2024 RLV

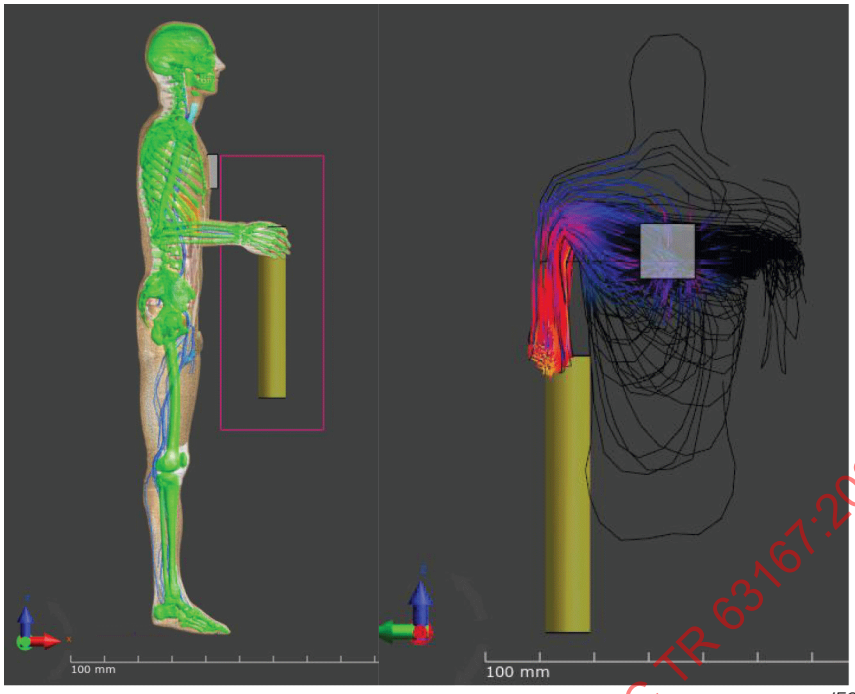

IEC

Figure 5 – Realistic computational 3D human body model and results of calculation of current density and pathway

7 Consideration in standardization of evaluation method for contact current

At the moment, there are no standardized methods for evaluating the contact currents in the context of human exposure to electric, magnetic and electromagnetic fields. In this Clause 7, items to be considered in future standardization are discussed.

a) Scope: A future standard ~~should~~ will clarify its scope, i.e. it ~~should~~ will be limited to the issue of contact current related to the indirect effect of human exposure to electromagnetic fields~~, and exclude electrical safety issues~~. In addition, it ~~should~~ will be clearly stated that only steady-state contact current as shown in international EMF guidelines is dealt with ~~and that spark discharge is excluded~~.

b) Method of measuring contact current: A future standard ~~should~~ will clearly specify the measuring method(s) for the contact current including:
   - parameter to be measured (current or open-circuit voltage);
   - experimental setup;
   - human-equivalent circuit;
   - type of contact (touch contact, grasping contact);
   - specification of area of contact;
   - condition of grounding;
   - specifications of instrumentation used in the measurement.

IECNORM.COM : Click to view the full PDF of IEC TR 63167:2024 RLV

Annex A
(informative)

Contact current limits in international EMF guidelines

~~There are two major international EMF guidelines limiting contact currents caused by exposure to electric, magnetic and electromagnetic fields. These are guidelines published by ICNIRP (International Commission on Non-Ionizing Radiation Protection) [1], [2] and EMF standards published by IEEE (Institute of Electrical and Electronics Engineers) [3], [4].~~

~~The limit values applied to steady-state (continuous) contact currents are shown in Table A.1 for ICNIRP (reference levels), and in Table A.2 for IEEE (MPE: maximum permissible exposure). The basic rationale for limiting the contact current for frequencies up to 110 MHz for two assumed exposure categories (general public and occupational/controlled environment) is identical, although there are slight differences in the limit values between them.~~

A.1 General

There are two major international EMF guidelines limiting contact currents caused by exposure to electric, magnetic and electromagnetic fields. These are guidelines published by the ICNIRP (International Commission on Non-Ionizing Radiation Protection) [1], [2] and the EMF safety standard published by IEEE (Institute of Electrical and Electronics Engineers), IEEE Std C95.1™-2019 [3]. In these guidelines, limit values of contact currents are shown based on electro-stimulation effects for frequencies lower than 10 MHz [1] or 5 MHz [3], while guidance [2] or limit values [3] for contact currents are shown based on thermal effects for frequencies between 100 kHz and 110 MHz.

A.2 Reference levels based on electro-stimulation effects

The limit values applied to steady-state (continuous) contact currents are shown in Table A.1 for ICNIRP 2010 (reference levels), and in Table A.2 for IEEE (exposure reference levels). The basic rationale for limiting the contact current for two assumed exposure categories (general public and occupational or restricted environment) is identical, although there are slight differences in the limit values between them.

Table A.1 – Reference levels in ICNIRP 2010 guidelines for time varying contact current from conductive object [1]

Exposure characteristics	Frequency range	Maximum contact current (mA)
Occupational exposure	up to 2,5 kHz	1,0
	2,5 kHz to 100 kHz	0,4f
	100 kHz to ~~110~~ 10 MHz	40
General public exposure	up to 2,5 kHz	0,5
	2,5 kHz to 100 kHz	0,2f
	100 kHz to ~~110~~ 10 MHz	20
NOTE f is frequency in kilohertz.		

IECNORM.COM : Click to view the full PDF of IEC TR 63167:2024 RLV

~~**Table A.2 – Maximum permissible exposure (MPE) levels of contact current in IEEE safety standards [3], [4]**~~

~~Condition~~	~~Frequency range~~	~~Action level (mA-RMS)~~	~~Controlled environment (mA-RMS)~~
~~Contact, grasp (contact area: 15 cm²)~~	~~0 Hz to 3 kHz~~	~~-~~	~~3,0~~
	~~3 kHz to 100 kHz~~	~~-~~	~~1,0 f~~
	~~100 kHz to 110 MHz~~	~~-~~	~~100~~
~~Contact, touch (contact area: 1 cm²)~~	~~0 Hz to 3 kHz~~	~~0,5~~	~~1,5~~
	~~3 kHz to 100 kHz~~	~~0,167 f~~	~~0,5 f~~
	~~100 kHz to 110 MHz~~	~~16,7~~	~~50~~
~~NOTE f is expressed in kilohertz. The term "action level" is equivalent to the term "general public".~~			

~~Regarding the type of contact, the ICNIRP guidelines assume "point contact", while the IEEE standards assume both "touch contact" (with a contact area of 1 cm²) and "grasping contact" (with a contact area of 15 cm², applicable only for a controlled environment). In the IEEE standards, it is stated that "the grasping contact limit pertains to controlled environments where personnel are trained to make grasping contact and to avoid touch contacts with conductive objects that present the possibility of painful contact".~~

~~As the averaging time for the determination of compliance, the IEEE standards specify times of 0,2 s for frequencies less than 5 MHz and 6 min for frequencies above 100 kHz, while the ICNIRP guidelines do not explicitly specify the averaging time.~~

~~For contact currents having multiple frequencies, the following evaluation formulae are provided. The following requirement is for ICNIRP, and similar evaluation formulae are also provided in the IEEE standards.~~

$$\sum_{n=1\text{Hz}}^{10\text{MHz}} \frac{I_n}{I_{C,n}} \le 1 \qquad \sum_{n=100\text{kHz}}^{110\text{MHz}} \left(\frac{I_n}{I_{C,n}}\right)^2 \le 1 \qquad \text{(A.1)}$$

~~where~~

~~I_n is the contact current component at frequency n, and~~

~~$I_{C,n}$ is the reference level of the contact current at frequency n (see Table A.1).~~

Table A.2 – Exposure reference levels (ERLs) of contact current based on electro-stimulation effects in IEEE Std C95.1-2019 [3]

Condition	Frequency range	Persons in unrestricted environments (mA-RMS)	Persons permitted in restricted environments (mA-RMS)
Contact, grasp (contact area: 15 cm²)	0 Hz to 3 kHz	–	3,0
	3 kHz to 5 MHz	–	1,0 f
Contact, touch (contact area: 1 cm²)	0 Hz to 3 kHz	0,5	1,5
	3 kHz to 5 MHz	0,167 f	0,5 f
NOTE f is in the frequency in kilohertz.			

Regarding the type of contact, the ICNIRP guidelines assume "point contact", while IEEE Std C95.1-2019 assumes both "touch contact" (with a contact area of 1 cm²), and "grasping contact" (with a contact area of 15 cm², applicable only for persons permitted in

IECNORM.COM : Click to view the full PDF of IEC TR 63167:2024 RLV

restricted environments). In IEEE Std C95.1-2019, the grasping contact limit is applied to restricted environments where personnel are trained to make grasping contact and to avoid touch contacts with conductive objects that present the possibility of painful contact.

As the averaging time for the determination of compliance, IEEE Std C95.1-2019 specifies times of 0,2 s for frequencies less than 100 kHz, while the ICNIRP guidelines do not explicitly specify the averaging time.

For contact currents having multiple frequencies, the following evaluation formula is provided. The following requirement is for ICNIRP, and similar evaluation formulas are also provided in IEEE Std C95.1-2019.

$$\sum_{n=1\text{Hz}}^{10\text{MHz}} \frac{I_n}{I_{\text{C},n}} \leq 1 \qquad \text{(A.1)}$$

where

I_n is the contact current component at frequency n;

$I_{\text{C},n}$ is the reference level of the contact current at frequency n (see Table A.1).

A.3 Reference levels and a guidance based on thermal effects

In the RF ICNIRP guideline revised in 2020 [2], guidance is provided for contact currents in the frequency range of 100 kHz to 110 MHz, rather than providing limit values as reference levels seen in its previous edition. The guidance is aimed at assisting persons who are responsible for transmitting high-power (greater than 100 V/m at their source, within the frequency range 100 kHz to 100 MHz) radio frequency fields to understand contact currents, the potential hazards, and how to mitigate such hazards. In the guidance, the lowest threshold of touch current is approximately 20 mA for adults and within the range of 10 mA for children.

For IEEE Std C95.1-2019 [3], limit values (ERL) based on thermal effects and applied to steady-state (continuous) contact currents in the frequency range of 100 kHz to 110 MHz are shown in Table A.3.

Table A.3 – Exposure reference levels (ERLs) of contact current based on thermal effects in IEEE Std C95.1-2019 [3]

Condition	Frequency range	Persons in unrestricted environments (mA-RMS)	Persons permitted in restricted environments (mA-RMS)
Contact, grasp (contact area: 15 cm^2)	100 kHz to 3 MHz	–	100
	3 MHz to 30 MHz	–	$100(f/3)^{0,3}$
	30 MHz to 110 MHz	–	200
Contact, touch (contact area: 1 cm^2)	100 kHz to 3 MHz	16,7	50
	3 MHz to 30 MHz	$16,7(f/3)^{0,3}$	$50(f/3)^{0,3}$
	30 MHz to 110 MHz	33,4	100
NOTE f is expressed in megahertz.			

Regarding the type of contact, IEEE Std C95.1-2019 assumes both "touch contact" (with a contact area of 1 cm^2), and "grasping contact" (with a contact area of 15 cm^2, applicable only for persons permitted in restricted environment). In IEEE Std C95.1-2019, the grasping contact

IECNORM.COM : Click to view the full PDF of IEC TR 63167:2024 RLV

limit pertains to restricted environments where personnel are trained to make grasping contact and to avoid touch contacts with conductive objects that present the possibility of painful contact.

As the averaging time for the determination of compliance, the IEEE standard specifies times of six minutes averaging for grasping contact, while the touch currents are determined and expressed as the maximum instantaneous value averaged over 1 s.

IECNORM.COM : Click to view the full PDF of IEC TR 63167:2024 RLV

Bibliography

[1] International Commission on Non-Ionizing Radiation Protection~~, Guidelines for limiting exposure to time-varying electric, magnetic and electromagnetic fields (up to 300 GHz), *Health Physics*, Vol. 74, No. 4, pp. 494-522, 1998~~ *Guidelines for limiting exposure to time-varying electric and magnetic fields (1 Hz to 100 kHz)*, *Health Physics*, Vol. 99, No. 6, pp. 818-836, 2010

[2] International Commission on Non-Ionizing Radiation Protection,~~ Guidelines for limiting exposure to time-varying electric and magnetic fields (1 Hz to 100 kHz), *Health Physics*, Vol. 99, No. 6, pp. 818-836, 2010~~ *Guidelines for limiting exposure to electromagnetic fields (100 kHz to 300 GHz), Health Physics*, Vol. 118, No. 5, pp. 483-524, 2020

~~[3] IEEE Std C95.6-2002, *IEEE Standard for Safety Levels with Respect to Human Exposure to Electromagnetic Fields, 0-3kHz*~~

[3] IEEE Std C95.1-~~2005~~2019, *IEEE Standard for Safety Levels with Respect to Human Exposure to~~ Radio Frequency Electromagnetic Fields, 3 kHz to 300 GHz~~ Electric, Magnetic, and Electromagnetic Fields, 0 Hz to 300 GHz*

[4] CIGRE Technical Brochure, *Issues Related to Spark Discharges*~~. (to be published)~~, Ref 745, 2018

[5] EN 50647:2017, *Basic standard for the evaluation of workers' exposure to electric and magnetic fields from equipment and installations for the production, transmission and distribution of electricity*

[6] EPRI, *Transmission Line Reference Book – 345 kV and Above*, 2nd Edition, ed. Palo Alto, California: Electric Power Research Institute, 1982

[7] R.G. Olsen, and K.C. Jaffa, *Electromagnetic coupling from power lines and magnetic field safety analysis*, IEEE Trans. Power Apparatus and Systems, Vol. PAS-103, No. 12, pp. 3595-3607, 1984

[8] ITU-T, *Directives concerning the protection of telecommunication lines against harmful effects from electric power and electrified railway lines: Volume VI – Danger, damage and disturbance*, 2008

[9] IEC 62233~~:2005~~, *Measurement methods for electromagnetic fields of household appliances and similar apparatus with regard to human exposure*

[10] IEC TS 62996~~:2017~~, *Industrial electroheating and electromagnetic processing equipment – Requirements on touch currents, voltages and electric fields from 1 kHz to 6 MHz*

[11] T. Sunohara, I. Laakso, C. Kwok Hung, and A. Hirata, *Compliance of induced quantities in human model for wireless power transfer system at 10 MHz*, Proceedings of 2013 International Symposium on Electromagnetic Theory, pp. 831-833, 2013

[12] IEC TR 62905, *Exposure assessment methods for wireless power transfer systems*

[13] IEC PAS 63184, *Assessment methods of the human exposure to electric and magnetic fields from wireless power transfer systems – Models, instrumentation, measurement and numerical methods and procedures (frequency range of 1 kHz to 30 MHz)*

[14] R.G. Olsen, J.B. Schneider, and R.A. Tell, *Radio frequency burns in the power system workplace*, IEEE Trans. Power Delivery, Vol. 26, No. 1, pp. 352-359, 2011

IECNORM.COM : Click to view the full PDF of IEC TR 63167:2024 RLV

[15] IEC 60479-1, *Effects of current on human beings and livestock – Part 1: General aspects*

[16] IEC 60065:2014, *Audio, video and similar electronic apparatus – Safety requirements*

[17] IEC 60950-1:2005, *Information technology equipment – Safety – Part 1: General requirements*
IEC 60950-1:2005/AMD1:2009
IEC 60950-1:2005/AMD2:2013

[18] IEC 60990:2016, *Methods of measurement of touch current and protective conductor current*

[19] IEC 62368-1:~~2014~~2023, *Audio/video, information and communication technology equipment – Part 1: Safety requirements*

[20] IEC 60335-1:~~2010~~2020, *Household and similar electrical appliances – Safety – Part 1: General requirements*
~~IEC 60335-1:2010/AMD1:2013~~
~~IEC 60335-1:2010/AMD2:2016~~

[21] IEC 60364-4-41:2005, *Low-voltage electrical installations – Part 4-41: Protection for safety – Protection against electric shock*
IEC 60364-4-41:2005/AMD1:2017

~~[20] IEC TS 60479-1:2005, *Effects of current on human beings and livestock – Part 1: General aspects*~~
~~IEC TS 60479-1:2005/AMD1:2016~~

[22] IEC ~~TS~~ 60479-2:~~2017~~2019, *Effects of current on human beings and livestock – Part 2: Special aspects*

[23] IEC 61140:2016, *Protection against electric shock – Common aspects for installation and equipment*

[24] IEC TS 61201:2007, *Use of conventional touch voltage limits – Application guide*

[25] IEC 61936-1:~~2010~~2021, *Power installations exceeding 1 kV AC and 1,5 kV DC – Part 1: ~~Common rules~~ AC*
~~IEC 61936-1:2010/AMD1:2014~~

[26] IEC 61010-1:2010, *Safety requirements for electrical equipment for measurement, control, and laboratory use – Part 1: ~~General requirements~~ AC*
IEC 61010-1:2010/AMD1:2016

[27] IEC 60601-1:2005, *Medical electrical equipment – Part 1: General requirements for basic safety and essential performance*
IEC 60601-1:2005/AMD1:2012
IEC 60601-1:2005/AMD2:2020

[28] IEEE Std ~~C95.3.1-2010~~ C95.3-2021, *IEEE Recommended Practice for Measurements and Computations of Electric, Magnetic, and Electromagnetic Fields with Respect to Human Exposure to Such Fields, 0 Hz to ~~100 kHz~~ 300 GHz*

[29] H. Kanai, I. Chatterjee, and O.P. Gandhi, *Human body impedance for electromagnetic hazard analysis in the VLF to MF band*, IEEE Trans. Microwave Theory and Techniques, Vol. 32, No. 8, pp. 763-771, 1984

IECNORM.COM : Click to view the full PDF of IEC TR 63167:2024 RLV

[30] Y. Kamimura, K. Komori, M. Shoji, Y. Yamada, S. Watanabe, and Y. Yamanaka, *Human body impedance for contact current measurement in Japan*, IEICE Trans. *Communications*, Vol. 88, No. 8, pp. 3263-3268, 2005

~~[30] IEC 62311:2007, *Assessment of electronic and electrical equipment related to human exposure restrictions for electromagnetic fields (0 Hz – 300 GHz)*~~

[31] J.C. Niple, J.P. Daigle, L.E. Zaffanella, T. Sullivan, and R. Kavet, *A portable meter for measuring low frequency currents in the human body*, Bioelectromagnetics, Vol. 25, No. 5, pp. 369-373, 2004

[32] T.W. Dawson, K. Caputa, M.A. Stuchly, and R. Kavet, *Electric fields in the human body resulting from 60-Hz contact currents*, IEEE Trans. Biomedical Engineering, Vol. 48, No. 9, pp. 1020-1026, 2001

[33] H. Tarao, H. Kuisti, L. Korpinen, N. Hayashi, and K. Isaka, *Effects of tissue conductivity and electrode area on internal electric fields in a numerical human model for ELF contact current exposures,* Phys. Med. Biol., Vol. 57, No. 10, pp. 2981-2996, 2012

[34] K.H. Chan, J. Hattori, I. Laakso, A. Hirata, and M. Taki, *Computational dosimetry for grounded and ungrounded human models due to contact current*, Phys. Med. Biol., Vol. 58, No. 15, pp. 5153-5172, 2013

[35] K.H. Chan, S. Ohta, I. Laakso, A. Hirata, Y. Suzuki, and R. Kavet, *Computational dosimetry for child and adult human models due to contact current from 10 Hz to 110 MHz*, Radiat. Prot. Dosimetry, Vol. 167, No. 4, pp. 642-652, 2015

[36] T. Murakawa, Y. Diao, E.A. Rashed, S. Kodera, Y. Tanaka, Y. Kamimura, S. Kitamura, S. Uehara, Y. Otaka, and A. Hirata, *Evaluation of SAR and temperature rise in human hand due to contact current from 100 kHz to 100 MHz*, IEEE Access, Vol. 8: pp. 200995-201004, 2020

[37] P. Schneeweiss, D. Panescu, D. Stunder, M.W. Kroll, C.J. Andrews, T. Theiler, *Computational models for contact current dosimetry at frequencies below 1 MHz*, Med. Biol. Eng. Comput., Vol. 59, No. 1, pp. 107-119, 2021

IECNORM.COM : Click to view the full PDF of IEC TR 63167:2024 RLV

IEC TR 63167

Edition 2.0 2024-08

TECHNICAL REPORT

colour inside

Assessment of contact current related to human exposure to electric, magnetic and electromagnetic fields

IECNORM.COM : Click to view the full PDF of IEC TR 63167:2024 RLV

IEC TR 63167:2024-08(en)

CONTENTS

FOREWORD 4
INTRODUCTION 6
1 Scope 7
2 Normative references 7
3 Terms and definitions 7
4 Abbreviated terms 8
5 Contact current in EMF guidelines 8
6 Consideration in evaluating contact currents 9
6.1 General 9
6.2 Assumed situations of human exposure to contact current 9
6.2.1 General 9
6.2.2 Capacitive coupling (power line) 9
6.2.3 Inductive coupling (power line) 9
6.2.4 Induction heating equipment 9
6.2.5 Wireless power transfer (WPT) 10
6.2.6 Broadcasting 10
6.3 Methods of measurement of touch current used in electrical safety standards 10
6.3.1 General 10
6.3.2 IEC standards related to electrical safety 10
6.3.3 Modelling human body impedance 13
6.4 Proposed methods of measuring contact current 15
6.4.1 General 15
6.4.2 Contact current measurement using a human subject 16
6.4.3 Contact current measurement using a human equivalent impedance/circuit 16
6.4.4 Contact current calculated from measurement of open-circuit voltage 16
7 Consideration in standardization of evaluation method for contact current 17
Annex A (informative) Contact current limits in international EMF guidelines 18
A.1 General 18
A.2 Reference levels based on electro-stimulation effects 18
A.3 Reference levels and a guidance based on thermal effects 19
Bibliography 21

Figure 1 – Time versus current zones of effects of AC currents (15 Hz to 100 Hz) on persons for a current path corresponding to left hand to feet (for explanation see Table 2) 12
Figure 2 – Measuring network for unweighted touch current 13
Figure 3 – Measuring network for touch current weighted for perception or startle-reaction [18] 14
Figure 4 – Impedances of various parts of the body proposed in IEC TS 62996 [10] for 1 kHz to 6 MHz 15
Figure 5 – Realistic computational 3D human body model and results of calculation of current density and pathway 17

Table 1 – Selected IEC technical committees and standards related to electrical safety 11

IECNORM.COM : Click to view the full PDF of IEC TR 63167:2024 RLV

Table 2 – Time versus current zones for AC 15 Hz to 100 Hz for hand to feet pathway – Summary of zones in Figure 1 12
Table A.1 – Reference levels in ICNIRP 2010 guidelines for time varying contact current from conductive object [1] 18
Table A.2 – Exposure reference levels (ERLs) of contact current based on electro-stimulation effects in IEEE Std C95.1-2019 [3] 18
Table A.3 – Exposure reference levels (ERLs) of contact current based on thermal effects in IEEE Std C95.1-2019 [3] 19

IECNORM.COM : Click to view the full PDF of IEC TR 63167:2024 RLV

INTERNATIONAL ELECTROTECHNICAL COMMISSION

ASSESSMENT OF CONTACT CURRENT RELATED TO HUMAN EXPOSURE TO ELECTRIC, MAGNETIC AND ELECTROMAGNETIC FIELDS

FOREWORD

1) The International Electrotechnical Commission (IEC) is a worldwide organization for standardization comprising all national electrotechnical committees (IEC National Committees). The object of IEC is to promote international co-operation on all questions concerning standardization in the electrical and electronic fields. To this end and in addition to other activities, IEC publishes International Standards, Technical Specifications, Technical Reports, Publicly Available Specifications (PAS) and Guides (hereafter referred to as "IEC Publication(s)"). Their preparation is entrusted to technical committees; any IEC National Committee interested in the subject dealt with may participate in this preparatory work. International, governmental and non-governmental organizations liaising with the IEC also participate in this preparation. IEC collaborates closely with the International Organization for Standardization (ISO) in accordance with conditions determined by agreement between the two organizations.

2) The formal decisions or agreements of IEC on technical matters express, as nearly as possible, an international consensus of opinion on the relevant subjects since each technical committee has representation from all interested IEC National Committees.

3) IEC Publications have the form of recommendations for international use and are accepted by IEC National Committees in that sense. While all reasonable efforts are made to ensure that the technical content of IEC Publications is accurate, IEC cannot be held responsible for the way in which they are used or for any misinterpretation by any end user.

4) In order to promote international uniformity, IEC National Committees undertake to apply IEC Publications transparently to the maximum extent possible in their national and regional publications. Any divergence between any IEC Publication and the corresponding national or regional publication shall be clearly indicated in the latter.

5) IEC itself does not provide any attestation of conformity. Independent certification bodies provide conformity assessment services and, in some areas, access to IEC marks of conformity. IEC is not responsible for any services carried out by independent certification bodies.

6) All users should ensure that they have the latest edition of this publication.

7) No liability shall attach to IEC or its directors, employees, servants or agents including individual experts and members of its technical committees and IEC National Committees for any personal injury, property damage or other damage of any nature whatsoever, whether direct or indirect, or for costs (including legal fees) and expenses arising out of the publication, use of, or reliance upon, this IEC Publication or any other IEC Publications.

8) Attention is drawn to the Normative references cited in this publication. Use of the referenced publications is indispensable for the correct application of this publication.

9) IEC draws attention to the possibility that the implementation of this document may involve the use of (a) patent(s). IEC takes no position concerning the evidence, validity or applicability of any claimed patent rights in respect thereof. As of the date of publication of this document, IEC had not received notice of (a) patent(s), which may be required to implement this document. However, implementers are cautioned that this may not represent the latest information, which may be obtained from the patent database available at https://patents.iec.ch. IEC shall not be held responsible for identifying any or all such patent rights.

IEC TR 63167 has been prepared by IEC technical committee 106: Methods for the assessment of electric, magnetic and electromagnetic fields associated with human exposure. It is a Technical Report.

This second edition cancels and replaces the first edition published in 2018. This edition constitutes a technical revision.

This edition includes the following significant technical changes with respect to the previous edition:

a) revised in accordance with the latest revision of international EMF guidelines;

b) revised in accordance with updates of relevant IEC standards on electrical safety.

IECNORM.COM : Click to view the full PDF of IEC TR 63167:2024 RLV

The text of this Technical Report is based on the following documents:

Draft	Report on voting
106/641/DTR	106/656/RVDTR

Full information on the voting for its approval can be found in the report on voting indicated in the above table.

The language used for the development of this Technical Report is English.

This document was drafted in accordance with ISO/IEC Directives, Part 2, and developed in accordance with ISO/IEC Directives, Part 1 and ISO/IEC Directives, IEC Supplement, available at www.iec.ch/members_experts/refdocs. The main document types developed by IEC are described in greater detail at www.iec.ch/publications.

The committee has decided that the contents of this document will remain unchanged until the stability date indicated on the IEC website under webstore.iec.ch in the data related to the specific document. At this date, the document will be

- reconfirmed,
- withdrawn, or
- revised.

IMPORTANT – The "colour inside" logo on the cover page of this document indicates that it contains colours which are considered to be useful for the correct understanding of its contents. Users should therefore print this document using a colour printer.

IECNORM.COM : Click to view the full PDF of IEC TR 63167:2024 RLV

INTRODUCTION

In the guidelines limiting human exposure to electric, magnetic and electromagnetic fields (EMF guidelines), limits or a guidance for the contact current are given to avoid adverse indirect effects, i.e. electric shocks and burn hazards caused by contact with a conductive object located in an electric field or magnetic field or both, when the object has an electric potential owing to electric or magnetic induction to the object.

At the moment, no standardized method for evaluating the contact current, in the context of human exposures to the above fields has been well established. On the other hand, there is a vast amount of knowledge, as well as many standards and regulations on the issue of electrical safety (i.e. direct contact with live part of conductive object) to avoid severe electric shock hazards. Therefore, the evaluation methods used in the field of electrical safety can be useful references. This document summarizes general information on the assessment of contact current related to human exposure to electric, magnetic and electromagnetic fields.

IECNORM.COM : Click to view the full PDF of IEC TR 63167:2024 RLV

ASSESSMENT OF CONTACT CURRENT RELATED TO HUMAN EXPOSURE TO ELECTRIC, MAGNETIC AND ELECTROMAGNETIC FIELDS

1 Scope

This document, which is a Technical Report, provides general information on the assessment of contact current related to human exposure to electric, magnetic and electromagnetic fields. The contact currents in this context occur when a human body comes into contact with a conductive object that is non-electrified but exposed to an electric field or magnetic field or both at a different electric potential owing to electric or magnetic induction to the object. This is distinguished from the issue of electrical safety where contact with live parts of a conductive object is dealt with.

In reference to the international EMF guidelines [1], [2], and [3][1], the frequency range of contact current covered in this document is DC to 110 MHz, and only steady-state (continuous) contact currents are covered. Transient contact currents (spark discharges) which can occur immediately before the contact with the object are not covered.

2 Normative references

There are no normative references in this document.

3 Terms and definitions

For the purposes of this document, the following terms and definitions apply.

ISO and IEC maintain terminology databases for use in standardization at the following addresses:

- IEC Electropedia: available at https://www.electropedia.org/
- ISO Online browsing platform: available at https://www.iso.org/obp

3.1
contact current
<to human exposure> current flowing through the body resulting from contact with an insulated conductive object that has been energized in an electric, magnetic or electromagnetic field or from an insulated body that has been energized in an electric, magnetic or electromagnetic field and is in contact with a grounded conductive object

3.2
exposure
<to human> situation that occurs when a person is subjected to an electric, magnetic or electromagnetic field, or to a contact current other than those originating from physiological processes in the body and other natural phenomena

3.3
indirect effect
effect arising when an object present in an electromagnetic field becomes a cause of safety or health hazard

[1] Numbers in square brackets refer to the Bibliography.

IECNORM.COM : Click to view the full PDF of IEC TR 63167:2024 RLV

3.4
touch current
electric current passing through a human body when it touches one or more accessible and energized parts of an installation or of equipment, or object, used in the field of electrical safety

Note 1 to entry: The term "leakage current" had also been used as a synonym for touch current in the field of electrical safety.

[SOURCE: IEC 60050-195:2021, 195-05-21, modified – In the definition, "or through livestock" has been deleted, "and energized" has been added, "or object, used in the field of electrical safety" has been added. Note 1 to entry has been added.]

3.5
spark discharge
transfer of current through an air gap prior to making contact with another conductive object at a different potential

4 Abbreviated terms

3D	three dimensional
AC	alternating current
AM	amplitude modulation
DC	direct current
EMF	electric, magnetic or electromagnetic field
EV	electric vehicle
FM	frequency modulation
ICNIRP	International Commission on Non-Ionizing Radiation Protection
IEEE	Institute of Electrical and Electronics Engineers
IH	induction heating
MRI	magnetic resonance imaging
PC	personal computer
RF	radio frequency
WPT	wireless power transfer

5 Contact current in EMF guidelines

Clause 5 overviews contact currents described in the EMF guidelines [1], [2], and [3].

In the frequency range up to approximately 10 MHz (predominantly up to 100 kHz), the flow of electric current from an object in a field to the body of an individual can result in the stimulation of muscles or peripheral nerves. With increasing current, this can be manifested as perception, pain from an electric shock or burn, the inability to release the object, difficulty in breathing and, at higher currents, cardiac ventricular fibrillation.

In the frequency range of about 100 kHz to 110 MHz, shocks and burns can result either from an individual touching an ungrounded metal object that has acquired a charge in a field or from contact between a charged individual and a grounded metal object.

IECNORM.COM : Click to view the full PDF of IEC TR 63167:2024 RLV

In the EMF guidelines, reference levels or a guidance for steady state (continuous) contact current are given for frequencies up to 110 MHz to avoid shock and burn hazards (see Annex A), rather than to avoid ventricular fibrillation. The upper frequency of 110 MHz is the upper frequency limit of the FM broadcast band. Here, the transient currents resulting from spark discharges [4], which can occur when an individual comes into very close proximity with an object at a different electric potential, are not considered in the reference levels of contact current. Instead, the effect of spark discharge is considered in the reference levels of electric field exposure for the general public by including a sufficient margin to prevent surface electric-charge effects such as perception by most people.

6 Consideration in evaluating contact currents

6.1 General

Clause 6 describes items to be considered in evaluating contact currents:

a) assumed situations of human exposure to a contact current (6.2);

b) methods for evaluating a touch current used in electrical safety standards for references (6.3);

c) some proposed methods for evaluating contact currents (6.4).

6.2 Assumed situations of human exposure to contact current

6.2.1 General

There are several situations to be considered for human exposure to a contact current. Different cases are considered depending on the type of coupling between fields (electric or magnetic) and human bodies or objects.

6.2.2 Capacitive coupling (power line)

An electric field induces, by capacitive coupling (electrostatic induction), a voltage in a person or a conductive object that is isolated from the ground. When a person touches an object having a different potential, a contact current flows so as to cancel the potential difference. This can be categorized into two cases: (a) an isolated person touches a grounded object and (b) a grounded person touches an isolated object (especially a large object such as a bus or a truck) [5]. Comprehensive studies have been carried out for typical cases encountered under overhead transmission lines [6].

6.2.3 Inductive coupling (power line)

By inductive coupling (electromagnetic induction), a magnetic field induces a voltage, especially in long conductive objects such as telecommunication lines, fences and gas pipelines, having at least one reasonable grounding, when they are installed close to and parallel to magnetic field sources such as overhead power lines [7]. When a person touches the object, a contact current flows. In particular, in the case of fault condition in overhead power lines, the limit values for the open-circuit voltage in nearby telecommunication lines are set by an international regulation-setting body [8]. In contrast to the capacitive coupling, grounding a conductive object at a large distance from the point of contact will actually increase the amplitude of the open-circuit voltage, thereby increasing the contact current.

6.2.4 Induction heating equipment

Induction heating (IH) equipment is heating equipment using the Joule effect produced by magnetically induced currents. For a domestic IH cooker, a metal pan or pot is heated by a magnetic field, and when a person touches a conductive part of the pan or pot, a contact current can occur typically in the frequency ranges of around 20 kHz to 100 kHz. The method used to evaluate human exposure to magnetic fields produced by IH cookers is standardized in IEC 62233 [9]; however, the contact currents are not mentioned in IEC 62233.

IECNORM.COM : Click to view the full PDF of IEC TR 63167:2024 RLV

For industrial IH equipment, a method of evaluating touch current in terms of electrical safety is specified in IEC TS 62996 [10] for the frequency ranges between 1 kHz and 6 MHz.

6.2.5 Wireless power transfer (WPT)

A wireless power transfer (WPT) system is a system capable of transferring power between a transmitter and receiver using wireless technologies including electromagnetic induction, resonance, or capacitance. They are used for wirelessly charging mobile phones, tablet PCs, electric vehicles (EVs) and, so forth. There are several types of WPT, and the frequency ranges can vary from tens of kilohertz to tens of megahertz. When a conductive object is placed in the immediate vicinity of a system and a person touches it, a contact current can occur, such as by touching the metal body of an EV when charging with a WPT charging system [11]. Details regarding exposure assessment methods for WPT systems are reported in IEC TR 62905 [12] and IEC PAS 63184 [13]. In these publications, contact currents are considered for the conditions where an ungrounded or grounded metal object is placed in the vicinity of WPT systems.

6.2.6 Broadcasting

Burns can occur at a point of contact between a human body and a metallic structure that is exposed to RF electromagnetic fields from nearby sources such as AM broadcast antennas. The contact point between the body and the structure often has a small area and the current injected into the body is concentrated near this point. This can result in localized current densities strong enough to raise the local temperature and cause surface or deep burns [14].

6.3 Methods of measurement of touch current used in electrical safety standards

6.3.1 General

When considering the evaluation method for contact currents in the context of human exposure to electric, magnetic and electromagnetic fields, existing IEC standards related to electrical safety can provide some useful guidance.

6.3.2 IEC standards related to electrical safety

There are several IEC technical committees in charge of electrical safety. These include:

– TC 64: Electrical installations and protection against electric shock;
– TC 108: Safety of electronic equipment within the field of audio/video, information technology and communication technology;
– TC 61: Safety of household and similar electrical appliances;
– TC 99: System engineering and erection of electrical power installations in systems with nominal voltages above 1 kV AC and 1,5 kV DC, particularly concerning safety aspects;
– TC 66: Safety of measuring, control and laboratory equipment;
– TC 62/SC 62A: Common aspects of electrical equipment used in medical practice.

Table 1 summarizes the selected standards related to the electrical safety and the committees in which they were created. Note that the "touch voltage", the product of the touch current and the assumed body impedance, is commonly used as a parameter for setting limits for touch currents.

In IEC 60479-1 [15], a diagram of physiological effects for different touch currents and durations is shown (reproduced in Figure 1 and Table 2), which is commonly referenced in electrical safety standards as a basis for limiting touch currents.

IECNORM.COM : Click to view the full PDF of IEC TR 63167:2024 RLV

Table 1 – Selected IEC technical committees and standards related to electrical safety

IEC TC	IEC standards related to electrical safety	Notes
TC 108, Safety of electronic equipment within the field of audio/video, information technology and communication technology	IEC 60065:2014, Audio, video and similar electronic apparatus – Safety requirements [16]	Stipulates touch voltage limits
	IEC 60950-1:2005, Information technology equipment – Safety – Part 1: General requirements IEC 60950-1:2005/AMD1:2009 IEC 60950-1:2005/AMD2:2013 [17]	Stipulates touch current limits
	IEC 60990:2016, Methods of measurement of touch current and protective conductor current [18]	Stipulates measuring method of touch current
	IEC 62368-1:2023, Audio/video, information, and communication technology equipment – Part 1: Safety requirements [19]	Stipulates prospective touch voltage and touch current limits
TC 61, Safety of household and similar electrical appliances	IEC 60335-1:2020, Household and similar electrical appliances – Safety – Part 1: General requirements [20]	Stipulates touch current limits
TC 64, Electrical installations and protection against electric shock	IEC 60364-4-41:2005, Low-voltage electrical installations – Part 4-41: Protection for safety – Protection against electric shock [21] IEC 60364-4-41:2005/AMD1:2017	
	IEC 60479-1:2018, Effects of current on human beings and livestock – Part 1: General aspects [15]	A diagram of physiological effects for different body currents and durations is shown
	IEC 60479-2:2019, Effects of current on human beings and livestock – Part 2: Special aspects [22]	
	IEC 61140:2016, Protection against electric shock – Common aspects for installation and equipment [23]	
	IEC TS 61201:2007, Use of conventional touch voltage limits – Application guide [24]	
TC 99, Insulation co-ordination and system engineering of high voltage electrical power installations above 1,0 kV AC and 1,5 kV DC	IEC 61936-1:2021, Power installations exceeding 1 kV AC and 1,5 kV DC – Part 1: AC [25]	Stipulates touch voltage limits
TC 66, Safety of measuring, control and laboratory equipment	IEC 61010-1:2010, Safety requirements for electrical equipment for measurement, control, and laboratory use – Part 1: General requirements IEC 61010-1:2010/AMD1:2016 [26]	Stipulates touch current limits
TC 62/SC 62A, Common aspects of medical equipment, software, and systems	IEC 60601-1:2005, Medical electrical equipment – Part 1: General requirements for basic safety and essential performance IEC 60601-1:2005/AMD1:2012 IEC 60601-1:2005/AMD2:2020 [27]	Stipulates "leakage current" limits

IECNORM.COM : Click to view the full PDF of IEC TR 63167:2024 RLV

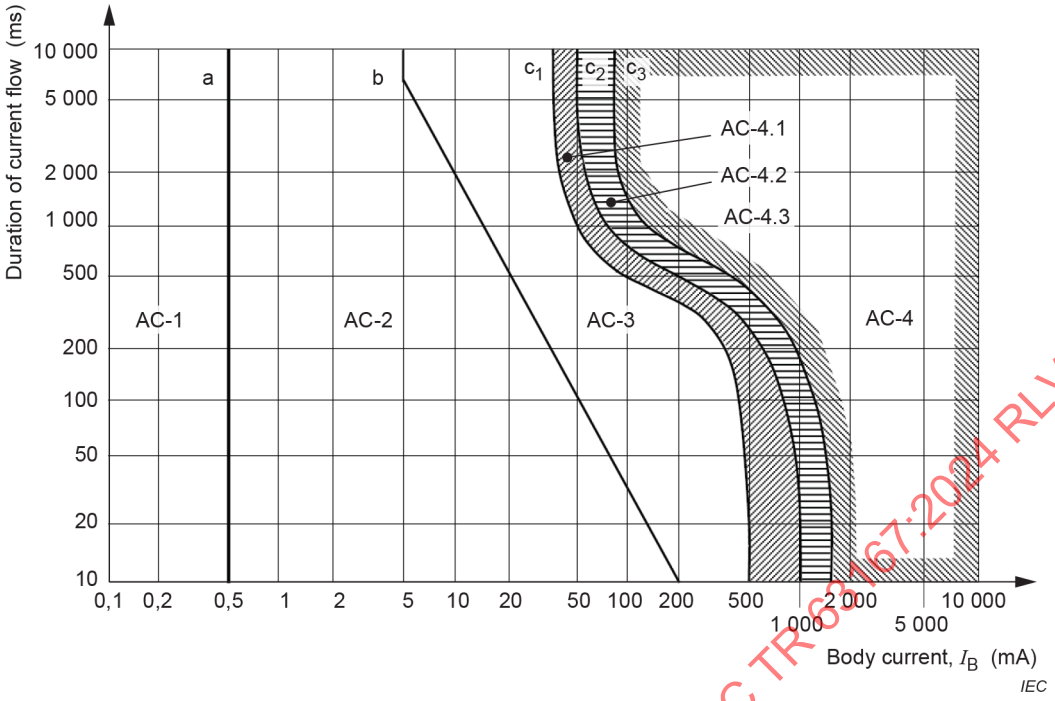

SOURCE: Figure 20 in IEC 60479-1:2018 [15].

Figure 1 – Time versus current zones of effects of AC currents (15 Hz to 100 Hz) on persons for a current path corresponding to left hand to feet (for explanation see Table 2)

Table 2 – Time versus current zones for AC 15 Hz to 100 Hz for hand to feet pathway – Summary of zones in Figure 1

Zones	Boundaries	Physiological effects
AC-1	Up to 0,5 mA curve a	Perception possible but usually no "startled" reaction
AC-2	0,5 mA up to curve b	Perception and involuntary muscular contractions likely but usually no harmful electrical physiological effects
AC-3	Curve b and above	Strong involuntary muscular contractions. Difficulty in breathing. Reversible disturbances of heart function. Immobilization can occur. Effects increasing with current magnitude. Usually, no organic damage to be expected
AC-4 [a]	Above curve c_1	Patho-physiological effects can occur such as cardiac arrest, breathing arrest, and burns or other cellular damage. Probability of ventricular fibrillation increasing with current magnitude and time
	Between curves c_1 and c_2	AC-4.1 Probability of ventricular fibrillation increasing up to about 5 %
	Between curves c_2 and c_3	AC-4.2 Probability of ventricular fibrillation up to about 50 %
	Beyond curve c_3	AC-4.3 Probability of ventricular fibrillation above 50 %

[a] For durations of current flow below 200 ms, ventricular fibrillation is only initiated within the vulnerable period if the relevant thresholds are surpassed. As regards ventricular fibrillation, Figure 1 relates to the effects of current which flows in the path left hand to feet. For other current paths, the heart current factor is considered.

SOURCE: Table 11 in IEC 60479-1:2018 [15].

IECNORM.COM : Click to view the full PDF of IEC TR 63167:2024 RLV

6.3.3 Modelling human body impedance

6.3.3.1 General

An impedance or an equivalent circuit of the human body is needed when deriving a touch voltage from a permissible touch current. In addition, when measuring touch or contact current, an appropriate circuit is standardized. The following considerations have been made regarding the standardization of electrical safety.

6.3.3.2 Dependence of human impedance on touch voltage

In IEC 60479-1 [15], it is shown that the impedance of the human body varies with the touch voltage, and data on this relationship are provided. In addition, the impedance of the human body for different current paths is also considered.

6.3.3.3 Frequency characteristics

In IEC 60990 [18], circuits that simulate the frequency characteristics of human body impedance are shown for the measurement of touch currents to be used for frequencies up to 1 MHz. The circuit shown in Figure 2 is for an "unweighted" touch current to be adopted for burns, while the circuit shown in Figure 3, which includes a weighting circuit, considers the human response of perception or reaction.

A similar circuit is also shown in IEEE Std C95.3™-2021 [28]. In IEEE C95.3, a simulated body impedance (standard load) that can be inserted in the measurement circuit when measuring the contact current is shown.

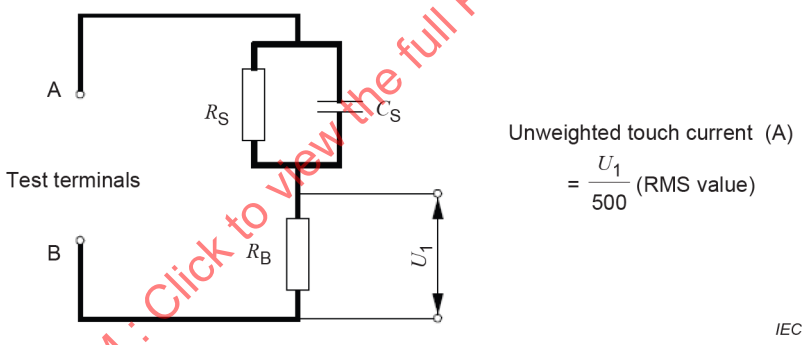

Key

R_S = 1 500

R_B = 500

C_S = 0,22

R resistance (Ω)

C capacitance (μF)

U voltage (V)

SOURCE: Figure 3 in IEC 60990:2016 [18].

Figure 2 – Measuring network for unweighted touch current

IECNORM.COM : Click to view the full PDF of IEC TR 63167:2024 RLV

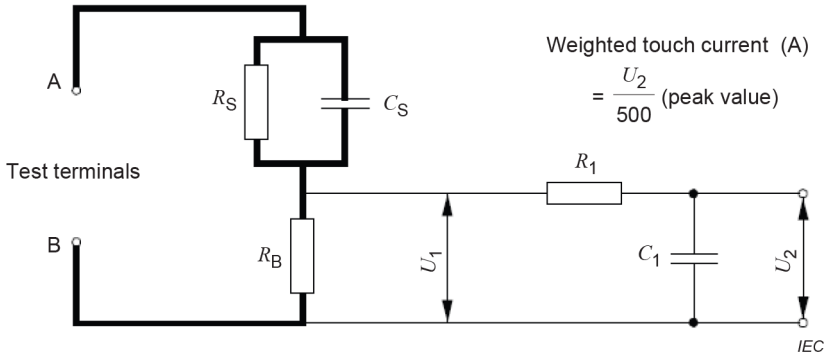

Key

R_S = 1 500

R_B = 500

C_S = 0,22

R_1 = 10 000

C_1 = 0,022

R resistance (Ω)

C capacitance (μF)

U voltage (V)

SOURCE: Figure 4 in IEC 60990:2016 [18].

Figure 3 – Measuring network for touch current weighted for perception or startle-reaction [18]

6.3.3.4 Consideration of touching boundary (skin impedance and contact area)

Well-investigated circuits for the human body impedance considering electrodes, skin impedances and spreading impedances have also been proposed for the frequency ranges from 10 kHz to 10 MHz [29] and from 75 kHz to 15 MHz [30] based on measurements made on human subjects. In IEC TS 62996 [10], which deals with the electrical safety of industrial electroheating and electromagnetic processing equipment, the circuit proposed in [29] was adopted with minor modification for frequencies from 1 kHz to 6 MHz.

In addition, the area of contact is stipulated in the safety standards to properly simulate the touching condition in measurements. In the proposed circuits in [10] (Figure 4), [29] and [30], "grip" and "finger" contacts can be considered. In the EMF guidelines (see Annex A), the assumed conditions of contact are "point contact" (area not specified) in ICNIRP guidelines [1], and "touch contact" with a contact area of 1 cm^2 and "grasping contact" (applicable only for "persons permitted in restricted environments") with a contact area of 15 cm^2 for the IEEE safety standard [3].

IECNORM.COM : Click to view the full PDF of IEC TR 63167:2024 RLV