IEC TS 62257-9-5

Edition 3.0 2016-06
REDLINE VERSION

TECHNICAL SPECIFICATION

colour inside

Recommendations for ~~small~~ renewable energy and hybrid systems for rural electrification –
Part 9-5: Integrated systems – Selection of stand-alone lighting kits for rural electrification

IECNORM.COM : Click to view the full PDF of IEC TS 62257-9-5:2016 RLV
Withdrawn

THIS PUBLICATION IS COPYRIGHT PROTECTED
Copyright © 2016 IEC, Geneva, Switzerland

All rights reserved. Unless otherwise specified, no part of this publication may be reproduced or utilized in any form or by any means, electronic or mechanical, including photocopying and microfilm, without permission in writing from either IEC or IEC's member National Committee in the country of the requester. If you have any questions about IEC copyright or have an enquiry about obtaining additional rights to this publication, please contact the address below or your local IEC member National Committee for further information.

IEC Central Office
3, rue de Varembé
CH-1211 Geneva 20
Switzerland

Tel.: +41 22 919 02 11
Fax: +41 22 919 03 00
info@iec.ch
www.iec.ch

About the IEC
The International Electrotechnical Commission (IEC) is the leading global organization that prepares and publishes International Standards for all electrical, electronic and related technologies.

About IEC publications
The technical content of IEC publications is kept under constant review by the IEC. Please make sure that you have the latest edition, a corrigenda or an amendment might have been published.

IEC Catalogue - webstore.iec.ch/catalogue
The stand-alone application for consulting the entire bibliographical information on IEC International Standards, Technical Specifications, Technical Reports and other documents. Available for PC, Mac OS, Android Tablets and iPad.

IEC publications search - www.iec.ch/searchpub
The advanced search enables to find IEC publications by a variety of criteria (reference number, text, technical committee,…). It also gives information on projects, replaced and withdrawn publications.

IEC Just Published - webstore.iec.ch/justpublished
Stay up to date on all new IEC publications. Just Published details all new publications released. Available online and also once a month by email.

Electropedia - www.electropedia.org
The world's leading online dictionary of electronic and electrical terms containing 20 000 terms and definitions in English and French, with equivalent terms in 15 additional languages. Also known as the International Electrotechnical Vocabulary (IEV) online.

IEC Glossary - std.iec.ch/glossary
65 000 electrotechnical terminology entries in English and French extracted from the Terms and Definitions clause of IEC publications issued since 2002. Some entries have been collected from earlier publications of IEC TC 37, 77, 86 and CISPR.

IEC Customer Service Centre - webstore.iec.ch/csc
If you wish to give us your feedback on this publication or need further assistance, please contact the Customer Service Centre: csc@iec.ch.

IECNORM.COM : Click to view the full PDF of IEC 62497-9-5:2016 RLV
Withdrawn

IEC TS 62257-9-5

Edition 3.0 2016-06
REDLINE VERSION

TECHNICAL SPECIFICATION

Recommendations for ~~small~~ renewable energy and hybrid systems for rural electrification –
Part 9-5: Integrated systems – Selection of stand-alone lighting kits for rural electrification

IECNORM.COM : Click to view the full PDF of IEC TS 62257-9-5:2016 RLV
Withdrawn

INTERNATIONAL
ELECTROTECHNICAL
COMMISSION

ICS 27.160

ISBN 978-2-8322-3514-0

Warning! Make sure that you obtained this publication from an authorized distributor.

® Registered trademark of the International Electrotechnical Commission

CONTENTS

FOREWORD....16
INTRODUCTION....19
1 Scope....21
2 Normative references....21
3 Terms and definitions....22
4 System limits....27
4.1 System description....27
4.1.1 Components....27
4.1.2 ~~Product~~ Component categories....28
4.1.3 Lighting ~~kit~~ parts definitions....32
4.1.4 Additional system elements....33
4.2 System measurements and observations....33
4.2.1 General....33
4.2.2 Product design, manufacture, and marketing aspects....34
4.2.3 Product durability and workmanship aspects....37
4.2.4 Lighting durability aspects....40
4.2.5 Battery performance aspects....41
4.2.6 Solar module aspects....42
~~4.2.7 Run time aspects....~~
4.2.7 Electrical characteristics....43
4.2.8 Performance aspects....44
4.2.9 Light output aspects....46
4.2.10 Battery-charging circuit efficiency....47
~~4.2.11 Water protection integrated assessment....~~
4.2.11 Self-certification aspects....47
5 Product specification....48
5.1 General....48
5.2 Applications....49
5.3 Quality assurance principles....49
~~5.3.1 General....~~
~~5.3.2 Rationale for dividing quality, warranty, and performance....~~
5.4 Product specification framework description....50
5.4.1 General....50
5.4.2 ~~Blank~~ Product specification ~~document~~ template....50
5.4.3 Tolerances....55
5.4.4 Quality standards criteria....56
5.4.5 Warranty requirements criteria....62
~~5.4.6 Performance targets criteria....~~
6 Quality test method....65
6.1 General....65
6.2 Applications....65
6.3 Sampling requirements....65
6.4 Laboratory requirements....66
6.5 Testing requirements....66
6.6 Recommended tests programme....68
6.6.1 General....68

IECNORM.COM : Click to view the full PDF of IEC TS 62257-9-5:2016 RLV
Withdrawn

~~6.6.2 Product sampling~~
6.6.2 Test preparation 69
6.6.3 Batch A tests 70
6.6.4 Batch B tests 71
6.6.5 Batch C – potentially destructive tests 72
6.6.6 Report preparation 73
6.7 Reporting 73
7 Market check method 73
7.1 General 73
7.2 Applications 74
7.3 Sampling requirements 74
7.4 Laboratory requirements 74
7.5 Testing requirements 74
7.6 Recommended tests programme 77
7.7 Report requirements 77
8 Initial screening method 77
8.1 General 77
8.2 Applications 77
8.3 Sampling requirements 77
8.4 Laboratory requirements 78
8.5 Testing requirements 78
8.6 Recommended tests programme 81
8.7 Reporting 81
~~9 Field screening method~~
9 Accelerated verification method 85
9.1 General 85
9.2 Applications 85
9.3 Sampling requirements 86
9.3.1 General 86
9.3.2 Verification entry testing 86
9.3.3 Follow-up QTM testing 86
9.4 Laboratory requirements 87
9.5 Testing requirements 87
9.5.1 General 87
9.5.2 Verification entry testing 87
9.5.3 Follow-up QTM testing 89
9.6 Recommended tests programme 90
9.7 Report requirements 90
10 Standardized specification sheets 90
10.1 General 90
10.2 Applications 90
10.2.1 General 90
10.2.2 Guidance 91
10.2.3 Framework for SSS guidelines document 91
Annex A (informative) Recommended quality standards ~~and performance targets~~ for off-grid lighting market support programme qualification 98
A.1 ~~Scope~~ Overview 98
A.2 Test requirements 98

IECNORM.COM : Click to view the full PDF of IEC TS 62257-9-5:2016 RLV
Withdrawn

A.3 Product category requirements 98
A.4 Quality standards 99
A.5 Warranty and end user support requirements 101
~~A.6 Performance targets~~ .....
~~Annex B (informative) Example quality standards, warranty requirements, and performance targets for bulk procurement qualification ("sample tender")~~ .....
Annex B (informative) Reserved 106
Annex C (informative) Recommended SSS guidelines 107
C.1 ~~Scope~~ General 107
C.2 Qualification standards ~~and targets~~ 107
C.3 Test result requirements 107
C.3.1 Original testing 107
C.3.2 Retesting and updates 107
C.4 Style and format 108
C.5 Reporting precision 108
C.6 Results verification 109
C.7 Section descriptions 109
C.7.1 General 109
C.7.2 Header/overall performance 109
C.7.3 General information 110
C.7.4 Performance details 111
C.7.5 Light output 112
C.7.6 Special features 112
C.7.7 Durability 113
C.7.8 Solar module details 113
C.7.9 Battery details 114
C.7.10 Marks and certifications 114
C.7.11 SSS information 115
C.8 Example sheet 115
Annex D (normative) Manufacturer self-reported information 116
D.1 Background 116
D.2 Outcomes 116
D.3 Solicited information 116
D.3.1 General 116
D.3.2 Confidential information (not released publicly) 116
D.3.3 Public information (may be released publicly) 117
D.4 Reporting 118
Annex E (normative) Product sampling 120
E.1 Background 120
E.2 Test outcomes 120
E.3 Related tests 120
E.4 Procedure 120
E.4.1 Retail sampling 120
E.4.2 Warehouse sampling 121
E.5 Reporting 122
Annex F (normative) Visual screening 123
F.1 Background 123
F.2 Test outcomes 123

IECNORM.COM : Click to view the full PDF of IEC TS 62257-9-5:2016 RLV
Withdrawn

F.3 Related tests 123
F.4 Procedure 123
F.4.1 Properties, features, and information 123
F.4.2 Specifications 127
F.4.3 Functionality and internal inspection 129
F.5 Reporting 131
Annex G (normative) Sample preparation 136
G.1 Background 136
G.2 Test outcomes 136
G.3 Related tests 136
G.4 Procedure 136
G.4.1 General 136
G.4.2 Equipment requirements 136
G.4.3 Test prerequisites 137
G.4.4 Procedure 137
G.4.5 Calculations 139
G.5 Reporting 139
Annex H (normative) Power supply setup procedure 140
H.1 Background 140
H.2 Test outcomes 140
H.3 Related tests 140
H.4 Equipment requirements 140
H.5 Setup procedure for photometric measurements and lumen maintenance tests 141
H.5.1 Test setup 141
H.5.2 DC voltage and current levels 141
H.5.3 Stabilization period 142
H.5.4 4-wire power supply measurements 143
H.5.5 Filtering electronic noise 143
H.5.6 Troubleshooting 143
H.6 Reporting 144
Annex I (normative) Light output test 145
I.1 Background 145
I.2 Test outcomes 145
I.3 Related tests 145
I.4 Luminous flux measurement techniques 146
I.4.1 General 146
I.4.2 Luminous flux measurements with an integrating sphere or goniophotometer 146
I.4.3 Luminous flux measurements using the multi-plane method 147
I.5 Correlated colour temperature (CCT) measurement 149
I.6 Colour rendering index (CRI) measurement 149
I.7 Reporting 150
Annex J (normative) Lumen maintenance test 151
J.1 Background 151
J.2 Test outcomes 151
J.3 Related tests 152
J.4 Procedure 152
J.4.1 General 152

IECNORM.COM : Click to view the full PDF of IEC TS 62257-9-5:2016 RLV
Withdrawn

J.4.2 Full screening 152
J.4.3 Initial screening (500 h test) 157
J.5 Calculations 158
J.6 Alternate method for testing lumen maintenance using IESNA LM-80-08 158
J.6.1 Background 158
J.6.2 Test prerequisites 159
J.6.3 Procedure 159
J.6.4 DUT preparation and LED thermocouple attachment guidelines 159
J.6.5 Calculations 160
J.7 Reporting 160
Annex K (normative) Battery test 162
K.1 Background 162
K.2 Test outcomes 162
K.3 Related tests 162
K.4 Procedure 162
K.4.1 General 162
K.4.2 ~~Sealed~~ Valve-regulated lead-acid battery test 163
K.4.3 Nickel-metal hydride battery test 166
K.4.4 Lithium-ion battery test 168
K.4.5 Lithium-ion battery test 168
~~K.4.6 Nickel-cadmium battery test~~ .....
K.5 Reporting 171
Annex L (informative) Battery testing recommended practices 173
L.1 Background 173
~~L.2 Battery testing process flowcharts~~ .....
L.2 Deep discharge protection specifications by battery type 174
L.3 Overcharge protection specifications by battery type 175
Annex M (normative) Full-battery run time test 177
M.1 Background 177
M.2 Test outcomes 177
M.3 Related tests 178
M.4 Procedure 178
M.4.1 Full-battery run time test 178
M.4.2 Full-battery run time test with deep discharge protection measurement 182
M.5 Reporting 184
Annex N (normative) Full discharge preparation 185
N.1 Background 185
N.2 Test outcomes 185
N.3 Related tests 185
N.4 Procedure 185
N.4.1 General 185
N.4.2 Equipment requirements 185
N.4.3 Test prerequisites 185
N.4.4 Procedure 186
N.4.5 Calculations 187
N.5 Reporting 187
Annex O (normative) Grid charge test 188
O.1 Background 188

IECNORM.COM : Click to view the full PDF of IEC TS 62257-9-5:2016 RLV
Withdrawn

O.2 Test outcomes 188
O.3 Related tests 188
O.4 Procedure 188
O.4.1 General 188
O.4.2 Equipment requirements 188
O.4.3 Test prerequisites 189
O.4.4 Apparatus 189
O.4.5 Procedure 189
O.4.6 Calculations 189
O.5 Reporting 190
Annex P (normative) Electromechanical charge test 191
P.1 Background 191
P.2 Test outcomes 191
P.3 Related tests 191
P.4 Procedure 191
P.4.1 General 191
P.4.2 Equipment requirements 191
P.4.3 Test prerequisites 192
P.4.4 Apparatus 192
P.4.5 Procedure 192
P.4.6 Calculations 192
P.5 Reporting 192
Annex Q (normative) ~~Outdoor~~ Photovoltaic module I-V characteristics test 194
Q.1 Background 194
Q.2 Test outcomes 194
Q.3 Related tests 195
Q.4 Procedure 195
Q.4.1 Test programme using indoor (simulated measurements) .....
Q.4.1 Testing using IEC 61215 (all parts) 195
Q.4.2 Test programme using a solar simulator 195
Q.4.3 Outdoor photovoltaic module I-V characteristics test 196
Q.5 Reporting 200
Annex R (normative) Solar charge test 202
R.1 Background 202
R.2 Test outcomes 202
R.3 Related tests 202
R.4 Procedure 203
R.4.1 General 203
R.4.2 Test method using a resistor network 203
R.4.3 Test method using a solar array simulator (SAS) 208
R.4.4 Calculations 210
R.5 Reporting 217
Annex S (normative) Charge controller behaviour test 220
S.1 Background 220
S.2 Test outcomes 220
S.3 Related tests 221
S.4 Procedure 221
S.4.1 Active deep discharge protection test 221

IECNORM.COM : Click to view the full PDF of IEC TS 62257-9-5:2016 RLV
Withdrawn

S.4.2 Active overcharge protection test 223
S.4.3 Passive deep discharge protection test 227
S.4.4 Passive overcharge protection test 228
S.4.5 Standby loss measurement 230
S.5 Reporting 232
Annex T (normative) Light distribution test 234
T.1 Background 234
T.2 Test outcomes 234
T.3 Related tests 235
T.4 ~~Recognized~~ Approved test methods 235
T.4.1 General 235
T.4.2 Goniophotometer 239
T.4.3 Multi-plane method 239
T.4.4 Illuminance on a plane method 243
T.4.5 ~~Rotating disk~~ Turntable method 247
T.4.6 Illuminance on a desktop method 249
T.5 Reporting 251
Annex U (normative) Physical and water ingress protection test 255
U.1 Background 255
U.2 Test outcomes 255
U.3 Related tests 256
U.4 Procedure 256
U.4.1 General 256
U.4.2 IP testing at ~~an international~~ laboratory that has been accredited to test according to IEC 60529 256
U.4.3 Simplified IP ~~preliminary~~ inspection for ingress of solid foreign objects 257
U.4.4 Simplified IP preliminary inspection for ingress of water with harmful effects 258
U.5 Reporting 261
Annex V (normative) Level of water protection 262
V.1 Background 262
V.2 Test outcomes 262
V.3 Related tests 263
V.4 Laboratory requirements 263
V.5 Procedure 263
V.5.1 General 263
V.5.2 Level of water protection for enclosure only 264
V.5.3 Level of water protection from technical aspects 264
V.5.4 Overall level of water protection 267
V.6 Reporting 268
Annex W (normative) Mechanical durability test 269
W.1 Background 269
W.2 Test outcomes 269
W.3 Related tests 270
W.4 Procedures 270
W.4.1 Drop test 270
W.4.2 Switch and connector test 271
W.4.3 Gooseneck and moving part test 272
W.4.4 Strain relief test 273

IECNORM.COM : Click to view the full PDF of IEC TS 62257-9-5:2016 RLV
Withdrawn

W.5 Reporting 274
~~Annex X (informative) Example test report templates~~ .....
Annex X (informative) Reserved 304
Annex Y (informative) Photometer box for relative luminous flux measurements 305
Y.1 Background 305
Y.2 Plans 306
Y.3 Instructions for construction 309
Annex Z (informative) Photometer tube for relative luminous flux measurements 310
Z.1 Background 310
Z.2 Plans 310
Z.3 Instructions for construction 310
Annex AA (~~normative~~ informative) Field testing methods 311
AA.1 Background 311
AA.2 Test outcomes 311
AA.3 Related tests 311
AA.4 Laboratory requirements 312
AA.5 Procedures 312
AA.5.1 Full-battery run time test 312
AA.5.2 Solar run time test 313
AA.5.3 Luminous flux test 314
AA.5.4 Light distribution test 315
AA.6 Reporting 315
Annex BB (~~informative~~ normative) Battery durability test 317
BB.1 Background 327
BB.2 Test outcomes 327
BB.3 Related tests 327
BB.4 Procedure 328
BB.4.1 Durability storage test for valve-regulated lead-acid batteries 328
BB.4.2 Durability storage test for nickel-metal hydride batteries 329
BB.4.3 Durability storage test for lithium-ion batteries 329
BB.4.4 Durability storage test for lithium iron phosphate batteries 330
BB.5 Reporting 331
Annex CC (normative) Equipment requirements 332
Annex DD (normative) Protection tests 341
DD.1 Background 341
DD.2 Test outcomes 341
DD.3 Related tests 341
DD.4 Procedure 342
DD.4.1 PV overvoltage protection test 342
DD.4.2 Miswiring protection test 344
DD.4.3 Output overload protection test 346
DD.5 Reporting 349
Annex EE (normative) Assessment of DC ports 353
EE.1 Background 353
EE.2 Test outcomes 353
EE.3 Related tests 354
EE.4 Procedure 355
EE.4.1 Preparation 355

IECNORM.COM : Click to view the full PDF of IEC TS 62257-9-5:2016 RLV
Withdrawn

EE.4.2 Measurement of steady-state port characteristics 355
EE.4.4 Summary calculations 365
EE.4.5 Pass/fail tests for functionality and truth in advertising 366
EE.4.3 Dynamic measurement 361
EE.5 Reporting 367
Annex FF (normative) Appliance tests 369
FF.1 Background 369
FF.2 Test outcomes 369
FF.3 Related tests 369
FF.4 Procedure 370
FF.4.1 General 370
FF.4.3 Test procedure for television sets 371
FF.4.2 Test procedure for LED or CFL light points 370
FF.4.4 Test procedure for radios without internal batteries 371
FF.4.5 Test procedure for fans, motor-driven appliances, and other appliances without internal batteries 372
FF.4.6 Test procedure for other appliances with internal batteries 373
FF.5 Appliance operating voltage range test procedure 374
FF.5.1 General 374
FF.5.2 Equipment requirements 375
FF.5.3 Procedure for appliances without internal batteries 375
FF.5.4 Procedure for appliances with internal batteries 375
FF.6 Reporting 376
Annex GG (normative) Energy service calculations 378
GG.1 Background 378
GG.2 Test outcomes 379
GG.3 Related tests 381
GG.4 Procedure 381
GG.4.1 Full-battery run time energy service calculations 381
GG.4.2 Solar run time energy service calculations 385
GG.5 Reporting 392
Annex HH (normative) Generic appliances 394
HH.1 Background 394
HH.2 Test outcomes 394
HH.3 Related tests 394
HH.4 Equipment requirements 394
HH.5 Procedure 395
HH.6 Reporting 396
Bibliography 397

Figure 1 – Fixed ~~Separate (fixed indoors) system~~ indoor components – Example ~~arrangement of components~~ 29
Figure 2 – Fixed ~~integrated (fixed outdoors) system~~ outdoor components with an indoor light point – Example ~~arrangement of components~~ 30
Figure 3 – Portable separate ~~system~~ components – Example ~~arrangement of components~~ 31
Figure 4 – Portable integrated ~~system~~ components – Example ~~arrangement of components~~ 31
Figure 5 – Division of a lighting kit into subsystems – Illustrative example 33

IECNORM.COM : Click to view the full PDF of IEC TS 62257-9-5:2016 RLV
Withdrawn

Figure 6 – The two components of a product specification 48
~~Figure 7 – Recommended sequence of testing for FSM ..... ~~
Figure 7 – Recommended sequence of testing for QTM 69
Figure 8 – First portion of example SSS 95
Figure 9 – Last (second) portion of example SSS 97
Figure H.1 – 4-wire test configuration with input filter capacitors 141
Figure I.1 – Conceptual schematic of the light output test setup, including the 11 × 11 grid, Cartesian coordinate axes for rotation reference, and the DUT 148
Figure J.1 – Schematic of a photometer tube 153
Figure J.2 – Example lumen maintenance plot 161
~~Figure L.1 – Battery testing flowchart for the battery test (Annex K) ..... ~~
Figure M.1 – Interior view of photometer box with suspended light 180
Figure M.2 – Plot of example results from the full-battery run time test 181
Figure Q.1 – PV module I-V curve testing rack 197
Figure R.1 – Schematic of the power supply and DUT connection for the solar charge efficiency test 205
Figure R.2 – Example "true" and simulated I-V curves plotted with the deviation ratio 207
Figure R.3 – Example plots of current vs. time for four different DUT batteries. 214
Figure R.4 – Example time series plot of the solar charging cycle showing the maximum power available from the PV simulator, actual power supplied by the PV simulator, and power delivered to the batteries 218
Figure R.5 – Example time series plot of the solar charging cycle showing the instantaneous battery-charging circuit efficiency and solar operation efficiency 219
Figure S.1 – Schematic of the DC power supply-DUT connection using a series protection resistor 224
Figure T.3 – Radial illuminance distributions for two example DUTs, showing the calculation of the FWHM angle 243
Figure T.2 – Horizontal plane for determining FWHM angle and radial illuminance distribution, for a directed light point 238
Figure T.1 – Horizontal plane for determining FWHM angle and radial illuminance distribution, for an omnidirectional light point 237
Figure T.4 – Schematic of a task light suspended ~~0,75 m~~ above ~~a photometer~~ an illuminance meter 244
Figure T.5 – Schematic of ~~"rotary disk"~~ turntable setup, with the DUT shown 248
Figure T.6 – Side view of desktop light measuring setup 250
Figure T.7 – Example plot of usable area as a function of minimum illuminance 252
Figure T.8 – Example of resulting surface plot of light distribution from the brightest "face" of the multi-plane method or illuminance on a plane method 253
Figure T.9 – Example of resulting polar plot of illuminance from the multi-plane or ~~rotating disk~~ turntable method 254
Figure U.1 – Side view of the apparatus for testing a DUT's external solar module for protection against water ingress 260
Figure W.1 – Three-dimensional Cartesian coordinate system for drop test reference 271
Figure W.2 – Cable strain angle (γ) schematics for a PV module junction box (left) and a separate light point (right) 274
Figure Y.1 – Interior view of completed photometer box 305
Figure Y.2 – Exterior view of completed photometer box 306

IECNORM.COM : Click to view the full PDF of IEC TS 62257-9-5:2016 RLV
Withdrawn

Figure Y.3 – Photometer box dimensions 307
Figure Y.4 – Photometer box assembly pieces and list of materials 308
Figure Z.1 – Completed photometer tube 310
Figure EE.1 – Schematic of the DUT with DC port and USB port and variable resistors connected for the measurement of steady-state port characteristics 357
Figure EE.2 – Example of the plots of port characteristics 361
Figure EE.3 – Schematic of the DUT with DC port and USB port and variable resistors connected for the dynamic measurement 363
Figure EE.4 – Illustration of stepped current waveform for procedure 2 365
Figure EE.5 – Example time series plot of voltage and current showing the transients 365
Figure EE.6 – Typical configuration of USB port for special charger 367
Figure GG.1 – Conceptual energy flow diagram for energy service estimates 379

Table 1 – Applications of product specifications 49
Table 2 – Qualification as separate PV module 51
Table 3 – Truth-in-advertising tolerance 52
Table 4 – Safety and durability standards *(1 of 2)* 53
Table 5 – End user support standards 54
Table 6 – End user support requirements 55
~~Table 7 – Run time criteria for performance targets ..... ~~
Table 7 – Truth-in-advertising criteria for quality standards *(1 of 2)* 57
~~Table 8 – Lighting service criteria for performance targets ..... ~~
Table 8 – ~~Notes~~ Remarks on common truth-in-advertising aspects 58
~~Table 9 – Additional features criteria for performance targets ..... ~~
Table 9 – Safety and durability criteria for quality standards *(1 of 2)* 59
Table 10 – Recommended level of water protection by product category 61
Table 11 – End user support criteria for quality standards 62
Table 12 – Criteria for warranty standards 62
Table 13 – Applications of product specifications 65
Table 14 – QTM testing requirements *(1 of 3)* 66
Table 15 – Applications of ~~product specifications~~ MCM results 74
~~Table 16 – Run time criteria for performance targets ..... ~~
Table 16 – Applications of product specifications 77
~~Table 17 – Run time benchmarks ..... ~~
Table 17 – ISM testing requirements *(1 of 2)* 79
~~Table 18 – Lighting service criteria for performance targets ..... ~~
Table 18 – Applications of AVM results 86
~~Table 19 – Lighting service benchmarks ..... ~~
Table 19 – AVM verification entry testing requirements *(1 of 2)* 88
Table 20 – Additional function criteria for performance targets .....
Table 20 – Applications of product specifications 90
Table 21 – Recommended precision requirements for metrics on a continuous scale 93
~~Table 24 – Typical MCM testing guidelines ..... ~~
~~Table 27 – Applications of product specifications ..... ~~

IECNORM.COM : Click to view the full PDF of IEC TS 62257-9-5:2016 RLV
Withdrawn

~~Table 28 – FSM testing requirements~~
Table A.1 – Qualification as separate PV module 98
Table A.2 – Truth-in-advertising tolerance 99
Table A.3 – Safety and durability standards *(1 of 2)* 99
Table A.4 – End user support requirements 101
~~Table A.5 – Run time criteria for performance targets~~
~~Table A.6 – Lighting service criteria for performance targets~~
~~Table B.1 – Product classes qualified for bulk procurement~~
~~Table B.2 – Qualification as separate PV module~~
~~Table B.3 – Truth-in-advertising tolerance~~
~~Table B.4 – Safety and durability standards~~
~~Table B.5 – End-user support requirements~~
~~Table B.6 – Run time criteria for performance targets~~
~~Table B.7 – Lighting service criteria for performance targets~~
~~Table B.8 – Run time criteria for performance targets~~
~~Table B.9 – Lighting service criteria for performance targets~~
~~Table B.10 – Additional features criteria for performance targets~~
Table C.1 – Requirements for retesting to update SSS *(1 of 2)* 107
Table C.2 – Recommended precision requirements for metrics on a continuous scale 109
Table C.3 – Elements in the header/overall performance SSS section 110
Table C.4 – Elements in the general information SSS section 111
Table C.5 – Elements in the performance details section 112
Table C.6 – Elements in the light output SSS section 112
Table C.7 – Elements in the special features SSS section 113
Table C.8 – Elements in the durability SSS section 113
Table C.9 – Elements in the solar module details SSS section 113
Table C.10 – Elements in the battery details SSS section 114
Table C.11 – Elements in the marks and certifications SSS section 114
Table C.12 – Elements in the SSS information section 115
Table D.1 – Manufacturer self-reported information outcomes 116
Table E.1 – Product sampling outcomes 120
Table F.1 – Visual screening test outcomes 123
Table G.1 – Recommended minimum conductor sizes for copper wire 137
Table H.1 – Power supply setup test outcome 140
Table H.2 – Standard operating voltage for several common battery types 142
Table H.3 – Voltage and current reporting requirements 144
Table I.1 – Light output test outcomes 145
Table J.1 – Lumen maintenance test outcomes 152
Table J.2 – Lumen maintenance test minimum frequency of measurement for full screening test 154
Table J.3 – Lumen maintenance test minimum frequency of measurement for Initial screening test 158
Table K.1 – Battery test outcomes 162

IECNORM.COM : Click to view the full PDF of IEC TS 62257-9-5:2016 RLV
Withdrawn

Table K.2 – Recommended battery testing specifications according to battery chemistry 163
Table L.1 – Recommended battery deep discharge protection voltage specifications according to battery chemistry 175
Table L.2 – Recommended battery overcharge protection voltage and temperature specifications according to battery chemistry 176
Table M.1 – Full-battery run time test outcomes 178
Table O.1 – Grid charge test outcomes 188
Table P.1 – Mechanical charge test outcomes 191
Table Q.1 – Outdoor photovoltaic module I-V characteristics test outcomes 194
Table R.1 – Solar charge test outcome 202
Table R.2 – Simulated solar day power supply settings 208
Table S.1 – Charge controller behaviour test outcomes *(1 of 2)* 220
Table T.1 – Light distribution test outcomes 235
Table T.2 – Summary of testing options for characterizing lamp distributions 236
Table T.3 – Table of example illuminance measurements on the brightest "face" of the 1 m^2 grid and usable area as a function of minimum illuminance 252
Table U.1 – Water exposure and physical ingress protection test outcomes *(1 of 2)* 255
Table V.1 – Water exposure and physical ingress protection test outcomes 263
Table V.2 – Enclosure-only level of water protection requirements 264
Table V.3 – Technical level of water protection requirements 265
Table V.4 – Example detailed assessment supporting technical level of water protection 267
Table V.5 – Overall level of water protection requirements 267
Table W.1 – Mechanical durability test outcomes *(1 of 2)* 269
~~Table X.1 – Manufacturer self-reported information test report template ..... ~~
~~Table X.2 – Product sampling information test report template ..... ~~
~~Table X.3 – Visual screening results test report template ..... ~~
~~Table X.4 – Light output test report template ..... ~~
~~Table X.5 – Lumen maintenance test report template ..... ~~
~~Table X.6 – Battery test report template ..... ~~
~~Table X.7 – Full-battery run time test report template ..... ~~
Table AA.1 – Field test outcomes 311
Table AA.2 – Example run time test datasheet 313
Table BB.1 – Battery durability test outcomes 327
Table CC.1 – Symbols used in test method column of Table CC.2 332
Table CC.2 – Specifications for all required test equipment *(1 of 8)* 333
Table DD.1 – Protection test outcomes 341
Table DD.2 – Allowable port voltage limit by nominal voltage 343
Table DD.3 – Example table of PV overvoltage test results 351
Table DD.4 – Example table of miswiring protection test results 352
Table EE.1 – DC ports assessment outcomes. 354
Table EE.2 – Current pairs for dynamic test 364
Table FF.1 – Appliance power consumption test outcomes 369

IECNORM.COM : Click to view the full PDF of IEC TS 62257-9-5:2016 RLV
Withdrawn

Table FF.2 – Example table of nominal operating voltage, measured voltage, measured current, and calculated power. 377
Table GG.1 – Daily energy service calculations outcomes 380
Table GG.2 – Required inputs to estimate the full-battery run time(s) 381
Table GG.3 – Example usage profile 382
Table GG.4 – Required inputs to estimate the solar run time 386
Table GG.5 – Representative case for appliance usage when solar charging 386
Table HH.1 – Power consumption chart for generic appliances without batteries 395
Table HH.2 – Energy consumption chart for generic appliances with batteries 395

Withdrawn
IECNORM.COM : Click to view the full PDF of IEC TS 62257-9-5:2016 RLV

INTERNATIONAL ELECTROTECHNICAL COMMISSION

_____

RECOMMENDATIONS FOR ~~SMALL~~ RENEWABLE ENERGY AND HYBRID SYSTEMS FOR RURAL ELECTRIFICATION –

Part 9-5: Integrated systems – Selection of stand-alone lighting kits for rural electrification

FOREWORD

1) The International Electrotechnical Commission (IEC) is a worldwide organization for standardization comprising all national electrotechnical committees (IEC National Committees). The object of IEC is to promote international co-operation on all questions concerning standardization in the electrical and electronic fields. To this end and in addition to other activities, IEC publishes International Standards, Technical Specifications, Technical Reports, Publicly Available Specifications (PAS) and Guides (hereafter referred to as "IEC Publication(s)"). Their preparation is entrusted to technical committees; any IEC National Committee interested in the subject dealt with may participate in this preparatory work. International, governmental and non-governmental organizations liaising with the IEC also participate in this preparation. IEC collaborates closely with the International Organization for Standardization (ISO) in accordance with conditions determined by agreement between the two organizations.
2) The formal decisions or agreements of IEC on technical matters express, as nearly as possible, an international consensus of opinion on the relevant subjects since each technical committee has representation from all interested IEC National Committees.
3) IEC Publications have the form of recommendations for international use and are accepted by IEC National Committees in that sense. While all reasonable efforts are made to ensure that the technical content of IEC Publications is accurate, IEC cannot be held responsible for the way in which they are used or for any misinterpretation by any end user.
4) In order to promote international uniformity, IEC National Committees undertake to apply IEC Publications transparently to the maximum extent possible in their national and regional publications. Any divergence between any IEC Publication and the corresponding national or regional publication shall be clearly indicated in the latter.
5) IEC itself does not provide any attestation of conformity. Independent certification bodies provide conformity assessment services and, in some areas, access to IEC marks of conformity. IEC is not responsible for any services carried out by independent certification bodies.
6) All users should ensure that they have the latest edition of this publication.
7) No liability shall attach to IEC or its directors, employees, servants or agents including individual experts and members of its technical committees and IEC National Committees for any personal injury, property damage or other damage of any nature whatsoever, whether direct or indirect, or for costs (including legal fees) and expenses arising out of the publication, use of, or reliance upon, this IEC Publication or any other IEC Publications.
8) Attention is drawn to the Normative references cited in this publication. Use of the referenced publications is indispensable for the correct application of this publication.
9) Attention is drawn to the possibility that some of the elements of this IEC Publication may be the subject of patent rights. IEC shall not be held responsible for identifying any or all such patent rights.

This redline version of the official IEC Standard allows the user to identify the changes made to the previous edition. A vertical bar appears in the margin wherever a change has been made. Additions are in green text, deletions are in strikethrough red text.

IECNORM.COM : Click to view the full PDF of IEC TS 62257-9-5:2016 RLV
Withdrawn

The main task of IEC technical committees is to prepare International Standards. In exceptional circumstances, a technical committee may propose the publication of a Technical Specification when

- the required support cannot be obtained for the publication of an International Standard, despite repeated efforts, or
- the subject is still under technical development or where, for any other reason, there is the future but no immediate possibility of an agreement on an International Standard.

Technical Specifications are subject to review within three years of publication to decide whether they can be transformed into International Standards.

IEC 62257-9-5, which is a Technical Specification, has been prepared by IEC technical committee 82: Solar photovoltaic energy systems.

This third edition cancels and replaces the second edition issued in 2013. It constitutes a technical revision.

This edition includes the following significant technical changes with respect to the previous edition:

a) The battery test methods have been updated to harmonize with existing IEC standards, add safety guidance, and remove test methods for nickel-cadmium batteries (as proper disposal options are not available in many communities).
b) The sequence of testing has been changed to allow the battery to be charged using the product's charge controller prior to the full-battery run time test.
c) Limits on total series resistance of the test apparatus have been added to test procedures.
d) Language has been added throughout to facilitate the testing of systems with appliances, including non-lighting appliances such as radios.
e) An alternative lumen maintenance test procedure using IESNA LM80-08 test data has been added.
f) Methods have been added for testing water and physical ingress protection for photovoltaic modules.
g) Procedures have been added for powering light points directly from a power supply during the lumen maintenance, light output, and light distribution tests.
h) Equipment requirements and recommended equipment specifications have been consolidated into the new Annex CC.
i) New optional test methods have been added to assess robustness to faults (Annex DD), characterize DC ports (Annex EE) and appliances (Annex FF), and synthesize test results to estimate the energy service capabilities and evaluate advertising claims for systems with multiple appliances (Annex GG).

This part of IEC 62257 is to be used in conjunction with the IEC 62257 (all parts).

The text of this Technical Specification is based on the following documents:

Enquiry draft	Report on voting
82/1051/DTS	82/1115/RVC

Full information on the voting for the approval of this Technical Specification can be found in the report on voting indicated in the above table.

This publication has been drafted in accordance with the ISO/IEC Directives, Part 2.

IECNORM.COM : Click to view the full PDF of IEC TS 62257-9-5:2016 RLV
Withdrawn

A list of all parts in the IEC 62257 series, published under the general title *Recommendations for renewable energy and hybrid systems for rural electrification*, can be found on the IEC website.

Future standards in this series will carry the new general title as cited above. Titles of existing standards in this series will be updated at the time of the next edition.

The committee has decided that the contents of this publication will remain unchanged until the stability date indicated on the IEC web site under "http://webstore.iec.ch" in the data related to the specific publication. At this date, the publication will be

- transformed into an International standard,
- reconfirmed,
- withdrawn,
- replaced by a revised edition, or
- amended.

A bilingual version of this publication may be issued at a later date.

IMPORTANT – The 'colour inside' logo on the cover page of this publication indicates that it contains colours which are considered to be useful for the correct understanding of its contents. Users should therefore print this document using a colour printer.

IECNORM.COM : Click to view the full PDF of IEC TS 62257-9-5:2016 RLV
Withdrawn

INTRODUCTION

IEC 62257 (all parts) ~~intends to provide to different players involved in rural electrification projects (such as project implementers, project contractors, project supervisors, installers, etc.) guidelines for the setting up of~~ provides support and strategies for and institutions involved in rural electrification projects. It documents technical approaches for designing, building, testing, and maintaining off-grid renewable energy and hybrid systems with AC nominal voltage below 500 V, DC nominal voltage below 750 V and nominal power below 100 kVA.

These documents are recommendations to support buyers who want to connect with good quality options in the market:

- to choose the right system for the right place,
- to design the system, and
- to operate and maintain the system.

These documents are focused only on technical aspects of rural off-grid electrification concentrating on, but not specific to, developing countries. They ~~shall~~ are not ~~be~~ considered as all inclusive to rural electrification. The documents ~~try to promote the use of renewable energies in rural electrification; they do not deal with clean mechanism developments at this time (CO_2 emission, carbon credit, etc.)~~ do not describe a range of factors that can determine project or product success: environmental, social, economic, service capabilities, and others.

Further developments in this field could be introduced in future steps.

This consistent set of documents is best considered as a whole with different parts corresponding to items for safety, sustainability of systems, and ~~at the lowest life cycle~~ costs ~~as possible. One of the main objectives is to provide the minimum sufficient requirements, relevant to the field of application that is small renewable energy and hybrid off-grid systems.~~ The main objectives are to support the capabilities of households and communities that use small renewable energy and hybrid off-grid systems and inform organizations and institutions in the off-grid power market.

The purpose of this part of IEC 62257 is to specify quality assurance strategies for stand-alone lighting kits, including product specifications, tests, and a standardized specification sheet format. In addition to supporting the selection of products by project developers and implementers, quality assurance can help market support organizations, manufacturers, and governments achieve the goals they have for off-grid lighting projects.

The intended users of this part of IEC 62257 are listed below. In some clauses and subclauses of this part of IEC 62257, a description of the application of the subclause contents is offered to help provide context for each type of user.

a) Market support programmes are programmes that support the off-grid lighting market with financing, consumer education, awareness, and other services. Market support programmes often use quality assurance to qualify for access to services such as:
   - greenhouse gas reduction certifications or other incentives,
   - access to financing (trade or consumer finance),
   - use of a buyer seal and certification (government or non-governmental institutional backing, consumer or "business to business" seals),
   - participation in a public product information database (e.g. standardized specification sheets),
   - access to a business network or trade group,
   - business support and development services,
   - access to market intelligence, and

IECNORM.COM : Click to view the full PDF of IEC TS 62257-9-5:2016 RLV
Withdrawn

- participation in consumer awareness campaigns.

a) Manufacturers and distributors need to verify the quality and performance of products from different batches and potential business partners. Manufacturers and distributors often use quality assurance plans or requirements to:
   - support quality control processes at a manufacturing plant or upon receipt of goods from a contract manufacturer, and
   - choose products to distribute.

b) Bulk procurement programmes facilitate or place large orders for devices from a distributor or manufacturer. Bulk procurement programmes may use quality assurance to:
   - provide devices to a particular, relatively small group of end users whose needs are understood (e.g., project developers and implementers for an electrification project may include quality assurance requirements in the GS of an electrification project (see IEC TS 62257-3)), and
   - organize a subsidy, buy-down, or giveaway programme that will serve a broad set of users.

c) Trade regulators are typically government policymakers and officials who craft and implement trade and tax policy. Regulators may use quality assurance requirements to:
   - qualify for exemption from tax or duties, and
   - establish requirements for customs.

This part of IEC 62257 establishes the framework for creating a product specification, the basis for evaluating quality for a particular context. Product specifications include minimum requirements for quality standards and warranty requirements~~, and/or performance targets~~. Products are compared to specifications based on test results and other information about the product. The product specification framework is flexible and can accommodate the goals of diverse organizations and institutions.

There is a range of tests outlined in this part of IEC 62257; some are simple enough to be completed in the field by project developers while others require laboratory equipment. The tests and inspections are designed to be widely applicable across different markets, countries, and regions.

Standardized specification sheets are also defined that can be used to communicate the test results. Combined with a set of product specifications, the information in the standardized specification sheet can inform the use of a quality and/or performance label.

IECNORM.COM : Click to view the full PDF of IEC TS 62257-9-5:2016 RLV
Withdrawn

RECOMMENDATIONS FOR ~~SMALL~~ RENEWABLE ENERGY AND HYBRID SYSTEMS FOR RURAL ELECTRIFICATION –

Part 9-5: Integrated systems – Selection of stand-alone lighting kits for rural electrification

1 Scope

This part of IEC 62257, which is a Technical Specification, applies to stand-alone rechargeable electric lighting appliances or kits that can be installed by a typical user without employing a technician.

This part of IEC 62257 presents a quality assurance framework that includes product specifications (a framework for interpreting test results), test methods, and standardized specification sheets (templates for communicating test results).

2 Normative references

The following documents, in whole or in part, are normatively referenced in this document and are indispensable for its application. For dated references, only the edition cited applies. For undated references, the latest edition of the referenced document (including any amendments) applies.

~~IEC 60081:1997, *Double-capped fluorescent lamps – Performance specifications*~~
~~Amendment 1:2000~~
~~Amendment 2:2003~~
~~Amendment 3:2005~~
~~Amendment 4:2010~~

IEC 60529, *Degrees of protection provided by enclosures (IP Code)*

IEC 60891:2009, *Photovoltaic devices – Procedures for temperature and irradiance corrections to measured I-V characteristics*

IEC 60904-1:2006, *Photovoltaic devices – Part 1: Measurement of photovoltaic current-voltage characteristics*

IEC 61056-1:2012, *General purpose lead-acid batteries (valve-regulated types) – Part 1: General requirements, functional characteristics – Methods of test*

IEC 61215 (all parts), *Terrestrial photovoltaic (PV) modules – Design qualification and type approval*

IEC 61427-1:2013, *Secondary cells and batteries for renewable energy storage – General requirements and methods of test – Part 1: Photovoltaic off-grid application*

IEC 61672-1, *Electroacoustics – Sound level meters – Part 1: Specifications*

~~IEC 61951-1:2003, *Secondary cells and batteries containing alkaline or other non-acid electrolytes – Portable sealed rechargeable single cells – Part 1: Nickel-cadmium*~~

IECNORM.COM : Click to view the full PDF of IEC TS 62257-9-5:2016 RLV
Withdrawn

IEC 61951-2:2011, *Secondary cells and batteries containing alkaline or other non-acid electrolytes – Portable sealed rechargeable single cells – Part 2: Nickel-metal hydride*

IEC 61960:2011, *Secondary cells and batteries containing alkaline or other non-acid electrolytes – Secondary lithium cells and batteries for portable applications*

IEC 62087-1:2015, *Audio, video, and related equipment – Determination of power consumption – Part 1: General*

IEC 62087-2:2015, *Audio, video, and related equipment – Determination of power consumption – Part 2: Signals and media*

IEC 62087-3:2015, *Audio, video, and related equipment – Determination of power consumption – Part 3: Television sets*

~~IEC 62509:2010, *Battery charge controllers for photovoltaic systems – Performance and functioning*~~

CIE 15:2004, *Colorimetry*

CIE 084, *The measurement of luminous flux*

CIE 13.3~~:1995~~, *Method of measuring and specifying colour rendering properties of light sources*

CIE 127, *Measurement of LEDs*

CIE 177~~:2007~~, *Colour rendering of white LED light sources*

IESNA LM-78-07, *IESNA approved method for total luminous flux measurement of lamps using an integrating sphere photometer*

IESNA LM-79-08, *IES approval method for electrical and photometric measurements of solid state lighting products*

IESNA LM-80-08, *Approved method: measuring lumen maintenance of LED light sources*

~~ISO/IEC 17025, *General requirements for the competence of testing and calibration laboratories*~~

~~ISO 9001, *Quality management systems – Requirements*~~

~~PVRS 7A, *DC supplied lighting systems with fluorescent lamps for PV stand-alone systems*~~

3 Terms and definitions

For the purposes of this document, the following terms and definitions apply.

3.1
illuminance
illuminance of an elementary surface
E
luminous flux received by an elementary surface divided by the area of this surface

Note 1 to entry: In the SI system of units, illuminance is expressed in lux (lx) or lumens per square metre (lm/m^2).

IECNORM.COM : Click to view the full PDF of IEC TS 62257-9-5:2016 RLV
Withdrawn

[SOURCE: IEC 60050-723:1997, 723-08-30]

3.2
capacity
capacity of a cell or a battery
~~the quantity of electricity (electric charge), usually expressed in ampere-hours (Ah), which a fully charged battery can deliver under specified conditions~~
electric charge which a cell or battery can deliver under specified discharge conditions

Note 1 to entry: The SI unit for electric charge, or quantity of electricity, is the coulomb (1 C = 1 A·s) but in practice, capacity is usually expressed in ampere hours (Ah).

[SOURCE: IEC 60050-482:2004, 482-03-14]

3.3
device under test
DUT
particular sample that is being measured or observed

[SOURCE: IEC 62257-12-1:2015, 3.29]

3.4
life
life of a lamp
total time for which a lamp has been operated before it becomes useless, or is considered to be so according to specified criteria

Note 1 to entry: Lamp life is usually expressed in hours.

[SOURCE: IEC 60050-845:1987, 845-07-61]

~~**3.5**~~
~~**life test**~~
~~test in which lamps are operated under specified conditions for a specified time or to the end of life and during which photometric and electrical measurements may be made at specified intervals~~

~~[SOURCE: IEC 60050-845:1987, 845-07-62]~~

~~**3.6**~~
~~**service life**~~
~~**service life of a battery**~~
~~the period of useful life of a battery under specified conditions~~

~~[SOURCE: IEC 60050-482:2004, 482-03-23]~~

~~**3.7**~~
~~**light unit**~~
~~assembly inside a casing of all parts such as lamps, optical apparatus, coloured glass, terminals, necessary to exhibit a light aspect~~

~~[SOURCE: IEC 60050-821:1998, 821-02-38]~~

3.5
lux
illuminance produced on a surface of area 1 square metre by a luminous flux of 1 lumen uniformly distributed over that surface

IECNORM.COM : Click to view the full PDF of IEC TS 62257-9-5:2016 RLV
Withdrawn

Note 1 to entry: Lux is the SI unit of illuminance.

[SOURCE: IEC 60050-845:1987, 845-01-52, modified – The formula has been omitted, and the note has been replaced by a new note to entry.]

3.6
colour rendering index
CRI
measure of the degree to which the psychophysical colour of an object illuminated by the test illuminant conforms to that of the same object illuminated by the reference illuminant, suitable allowance having been made for the state of chromatic adaptation

[SOURCE: IEC 60050-845:1987, 845-02-61, modified – The symbol "R" has been replaced by "CRI" and the note has been omitted.]

3.7
correlated colour temperature
CCT
temperature of the Planckian radiator whose perceived colour most closely resembles that of a given stimulus at the same brightness and under specified viewing conditions

Note 1 to entry: The correlated colour temperature is expressed in kelvin (K).

[SOURCE: IEC 60050-845:1987, 845-03-50, modified – Notes 1 and 2 have been replaced by a new note to entry.]

3.8
full width half maximum
FWHM
range of a variable over which a given characteristic is greater than 50 % of its maximum value

Note 1 to entry: FWHM may be applied to characteristics such as radiation patterns, spectral linewidths, etc., and the variable may be wavelength, spatial or angular properties, etc., as appropriate.

[SOURCE: IEC 60050-731:1991, 731-01-57]

3.9
ampere
A
SI unit of electric current, equal to the direct current which, if maintained constant in two straight parallel conductors of infinite length, of circular cross-section with negligible area, and placed 1 metre apart in vacuum, would produce between these conductors a force per length equal to 2×10^{-7} N/m

Note 1 to entry: CGPM definition is as follows: "The ampere is that constant current which, if maintained in two straight parallel conductors of infinite length, of negligible circular cross-section, and placed 1 metre apart in vacuum, would produce between these conductors a force equal to 2×10^{-7} newton per metre of length."

[SOURCE: IEC 60050-112:2010, 112-02-07]

3.10
multimeter
multi-range multi-function measuring instrument intended to measure voltage, current and sometimes other electrical quantities such as resistance

[SOURCE: IEC 60050-312:2001, 312-02-24]

IECNORM.COM : Click to view the full PDF of IEC TS 62257-9-5:2016 RLV
Withdrawn

3.11
ammeter
instrument intended to measure the value of a current

[SOURCE: IEC 60050-313:2001, 313-01-01]

3.12
voltmeter
instrument intended to measure the value of a voltage

[SOURCE: IEC 60050-313:2001, 313-01-03]

3.13
illuminance meter
instrument for measuring illuminance

[SOURCE: IEC 60050-845:1987, 845-05-16]

3.14
photometer
instrument for measuring light

[SOURCE: IEC 60050-845:1987, 845-05-15, modified – The term "photometric quantities" has been replaced by "light".]

3.15
pyranometer
instrument for measuring incident global (direct-beam and diffuse) solar radiation

3.16
integrating sphere
hollow sphere whose internal surface is a diffuse reflector, as non-selective as possible.

Note 1 to entry: An integrating sphere is used frequently with a radiometer or photometer.

Note 2 to entry: An integrating sphere is used to determine the total luminous flux (lumen output) of a lighting device.

[SOURCE: IEC 60050-845:1987, 845-05-24, modified – A second note to entry has been added.]

3.17
goniophotometer
photometer for measuring the directional light distribution characteristics of sources, luminaires, media or surfaces

[SOURCE: IEC 60050-845:1987, 845-05-22]

3.18
power supply
electric energy converter which draws electric energy from a source and supplies it in a specified form to a load

[SOURCE: IEC 60050-151:2001, 151-13-76]

IECNORM.COM : Click to view the full PDF of IEC TS 62257-9-5:2016 RLV
Withdrawn

3.19
overvoltage protection
protection intended to operate when the power system voltage is in excess of a predetermined value

[SOURCE: IEC 60050-448:1995, 448-14-32]

~~**3.20**~~
~~**undervoltage protection**~~
~~**low voltage protection**~~
~~protection intended to operate when the power system voltage is reduced to less than a predetermined value~~

~~[SOURCE: IEC 60050-448:1995, 448-14-33]~~

~~**3.22**~~
~~**GS**~~
~~General Specification of the electrification project~~

3.20
IP class
IP rating
degree of protection provided by enclosures for electrical equipment against penetration by foreign bodies and dust/water

Note 1 to entry: IP means "ingress protection".

3.21
portable
connected in a way that makes a product or subsystem easy for an individual to carry

Note 1 to entry: Products or subsystems are portable when two or more of the main components (energy source, energy storage, and light source) are connected in ~~a way that makes the product or subsystem easy for an individual to carry~~ this way.

3.22
fixed
designed for permanent or semi-permanent mounting and use in place

Note 1 to entry: Products or subsystems are fixed when the main components (energy source, energy storage, and light source) are designed ~~for permanent or semi-permanent mounting and use in place~~ in this way.

3.23
separate
~~products are separate when no solar module is present or the solar module is connected to other components via a long enough cable that the solar module could~~ without solar module or with a solar module connected to other components via a cable that is sufficiently long to allow the solar module to collect energy outdoors while the other product components remain indoors

3.24
integrated
~~products are integrated when the~~ with a solar module ~~is~~ integrated into the same casing as the other components or ~~the solar module is~~ connected to other components via a cable that is too short to allow the solar module to collect energy outdoors while the other product components remain indoors

IECNORM.COM : Click to view the full PDF of IEC TS 62257-9-5:2016 RLV
Withdrawn

3.25
metadata
information that relates a test result to a specific sample and provides context about the result (e.g. specific test method used)

3.26
light emitting diode
LED
solid state device embodying a p-n junction, emitting optical radiation when excited by an electric current

[SOURCE: IEC 60050-845: 1987, 845-04-40]

3.27
low-voltage disconnect
LVD
battery voltage at which the load terminals of the charge controller are switched off to prevent the battery from over discharging

Note 1 to entry: This is a specific case of a "load disconnect point" as defined by IEC 62509:2010, 3.11.

~~[SOURCE: IEC 62509:2010]~~

3.28
standby loss
quantity of electricity (electric charge), expressed ~~in ampere hour (Ah)~~ as a fraction of the total battery capacity, drawn from a product's battery with the product switched off over a specific length of time

3.29
compact fluorescent lamp
CFL
discharge lamp of the low pressure mercury type in which most of the light is emitted by one or several layers of phosphors excited by the ultraviolet radiation from the discharge, typically self-ballasted with a tube that is wound in a spiral or arched shape to make it "compact" as opposed to linear fluorescent lamps

3.30
pink noise
noise whose power spectral density is inversely proportional to frequency

3.31
standard operating voltage
standardized voltage corresponding to a typical battery operating point during discharge

3.32
typical port voltage
voltage present at a port with a standardized typical load and battery operating voltage

3.33
coefficient of variation
ratio of the standard deviation to the mean

4 System limits

4.1 System description

4.1.1 Components

IECNORM.COM : Click to view the full PDF of IEC TS 62257-9-5:2016 RLV
Withdrawn

A stand-alone lighting kit typically comprises:

- The main components:
  - an energy source:
    a) solar photovoltaic module (integrated, supported by or completely separate from the casing),
    b) electromechanical charger (hand crank, pedal power, or other), and/or
    c) general DC power input (normally used with a central charging station or AC-DC converters to charge via grid power).
  - one or several light sources (typically CFL or LED),
  - ~~an energy storage device (one of several battery types)~~
  - battery/batteries, and
  - loads (optional), such as appliances (lighting, television, radio, fan, etc.), and load adapter cables (e.g. for mobile phones).
- The enclosure and other components:
  - casing or several casings (including some translucent parts in many cases),
  - circuits (battery charge and discharge controller, regulated voltage and current sources),
  - wiring to connect the circuits to each other and the main components,
  - fasteners to secure components in the casings,
  - switches for light control/selection,
  - cables and connectors,
  - protective devices,
  - status indicators/user feedback,
  - accessories (auxiliary power outlet, mobile phone charging or other appliance interface, radio, fan, TV, etc.), and/or
  - hardware for mounting.

4.1.2 ~~Product~~ Component categories

Components of stand-alone lighting kits can be placed into one of four categories based on the arrangement of components. The four categories are fixed indoor, fixed outdoor, portable separate, and portable integrated. It is important to categorize them because they have different inherent utility to the user and will encounter different environmental conditions based on their design.

Different quality standards ~~and performance targets~~ may apply to different categories.

~~Some kits that have multiple, independent lighting points may fit into more than one category, with different parts of the kit in different categories.~~

Each kit can contain components from multiple categories. Appliances included with the kit may also be categorized according to this same system.

The first word in each category name refers to the portability of the system.

- Fixed ~~systems~~ components are designed for permanent or semi-permanent mounting and use in place.
- ~~Portable systems are inherently portable with the light source and energy storage components permanently or temporarily joined.~~
  Portable components are inherently portable and generally contain an internal energy

IECNORM.COM : Click to view the full PDF of IEC TS 62257-9-5:2016 RLV
Withdrawn

source. For example, a stand-alone lighting kit can be a portable component with the light source and battery permanently or temporarily joined.

~~The second word refers to the arrangement of a solar module, if one is present, with respect to the other main components.~~

- ~~*Separate* systems have no solar module present or the solar module is connected to other components by a cable that is sufficiently long to place the solar module outdoors in a location with good solar access while the other components remain indoors.~~
- ~~*Integrated* systems have a solar module integrated in the same casing as the other components or it is otherwise designed so the whole product shall be left outdoors to charge via the solar module.~~

~~The four system types that can be derived from the categories listed above are:~~

Fixed components are further classified based on the expected use location:

a) Fixed ~~separate (fixed indoors): products that~~ indoor components are not inherently portable and are used indoors. ~~The light source(s) are separated from the battery by cables and cannot easily be used beyond the reach of the cables. If the product is solar-charged, the solar module is also separate from the battery and connected by a cable that is sufficiently long to place the solar module outdoors in a location with good solar access while the battery remains indoors (see Figure 1).~~
If a fixed indoor component is connected to a component that is intended to be used outdoors (such as a PV module), the cable connecting the two components shall be sufficiently long to place the outdoor component outdoors in an appropriate location while the indoor component remains indoors. Otherwise, the fixed outdoor category shall apply. See Figure 1 for an example.

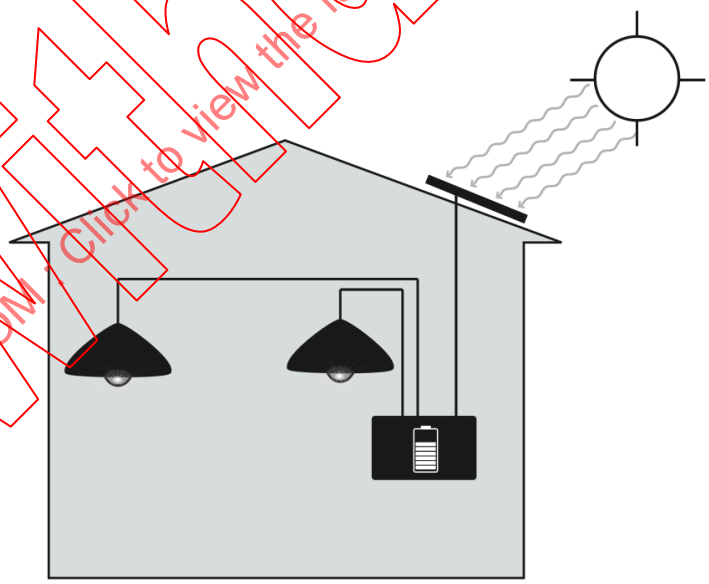

IEC

Figure 1 – Fixed ~~separate (fixed indoors) system~~ indoor components – Example ~~arrangement of components~~

b) ~~Fixed integrated (fixed outdoors): products that are not inherently portable and are charged with a solar module that is integrated in the casing or is otherwise designed so the whole product shall be left outdoors to charge via the solar module. These may also include lighting points that can be placed indoors (see Figure 4).~~
Fixed outdoor components are not inherently portable and are intended to be used outdoors, or are connected to components intended to be used outdoors by a cable of

IECNORM.COM : Click to view the full PDF of IEC TS 62257-9-5:2016 RLV

insufficient length to allow the component in question to be placed indoors. Fixed outdoor components may contain integrated PV modules; however, PV modules without additional components form their own category. See Figure 2 for an example.

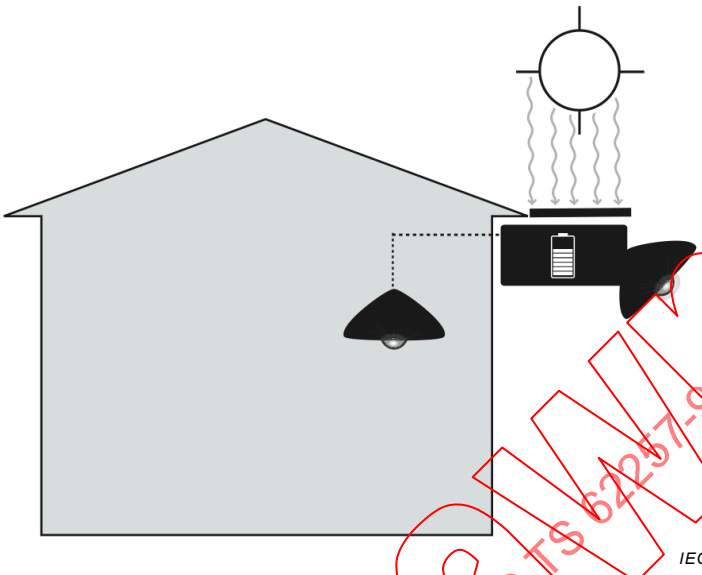

Figure 2 – Fixed ~~integrated (fixed outdoors) system~~ outdoor components with an indoor light point – Example ~~arrangement of components~~

Portable components are further classified by the presence or absence of an integrated solar module:

c) ~~Portable separate: products that are portable, with a battery and light source permanently or temporarily joined. If the product is solar-charged, the solar module is also separate from the battery and connected by a cable that is sufficiently long to place the solar module outdoors in a location with good solar access while the battery remains indoors (see Figure 2).~~
Portable separate components are portable, with a battery and load permanently or temporarily joined. If the component is intended to be connected to a fixed outdoor or portable integrated component or a PV module, the cable connecting the two components shall be sufficiently long to place the outdoor component outdoors in an appropriate location while the indoor component remains indoors; otherwise, the portable integrated category shall apply. See Figure 3 for an example.

IECNORM.COM : Click to view the full PDF of IEC TS 62257-9-5:2016 RLV
Withdrawn

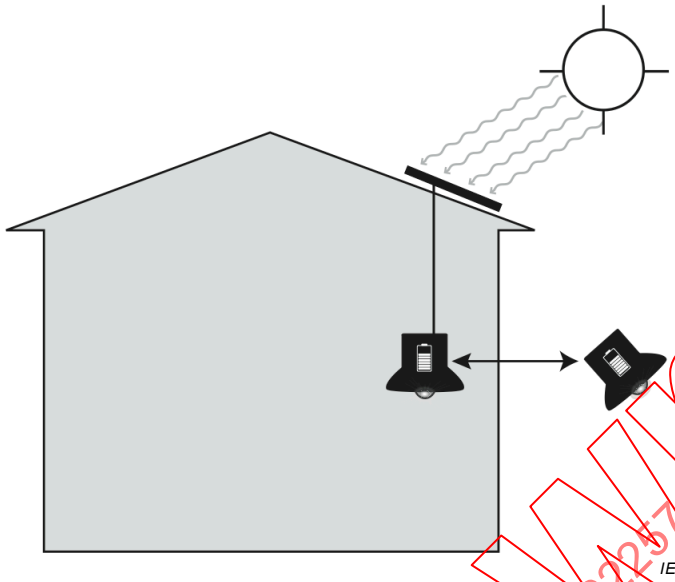

Figure 3 – Portable separate ~~system~~ components – Example ~~arrangement of components~~

d) Portable integrated ~~products~~ components ~~that~~ are portable and are charged with a solar module that is integrated in the casing or is otherwise designed so that the whole ~~product~~ component shall be left outdoors to charge via the solar module. This includes portable components that are intended to be connected to fixed outdoor or portable integrated components, or a PV module, by a cable of insufficient length to allow the component in question to be placed indoors. Portable integrated components may contain PV modules; however, PV modules without additional components form their own category. See Figure 4 for an example.

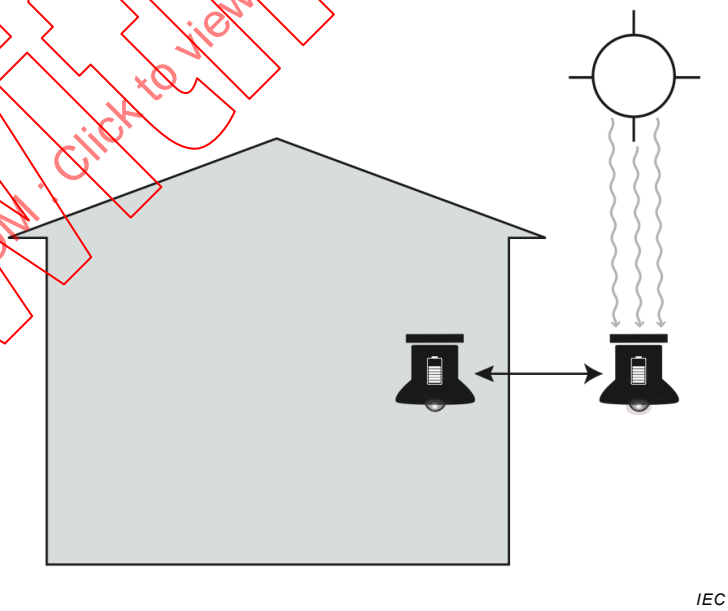

Figure 4 – Portable integrated ~~system~~ components – Example ~~arrangement of components~~

PV modules may be subjected to different standards for durability (including physical and water ingress protection), and are therefore considered a separate category:

IECNORM.COM : Click to view the full PDF of IEC TS 62257-9-5:2016 RLV
Withdrawn

e) PV modules include one or more PV cells surrounded by encapsulating or laminating materials with a transparent glass or plastic covering, plus a junction box mounted on the back of the module for electrical connections. A PV module may be surrounded by a frame, typically of metal or plastic, and may include mounting brackets or other hardware. This category applies only to PV modules; assemblies containing one or more PV modules plus additional electrical or electronic components, such as circuit boards or batteries, shall be considered fixed outdoor components.

4.1.3 Lighting ~~kit~~ parts definitions

~~Lighting kits may~~ The portion of the kit which provides lighting can also be divided into several subsystems, as defined below. The subsystems are nested beginning with the smallest subsystem and working down to complete kits.

a) Light source(s): individual LED, CFL, or other light emitting components.

b) Array(s): single or grouped light sources that can be controlled independently from other arrays.

c) Light point(s) or lighting appliance(s): house one or more arrays and can be moved with respect to other light points, if there are more than one.

d) Lighting unit(s): stand-alone parts of the kit, each with an independent battery that powers one or more light points.

NOTE It is appropriate to categorize each light unit (as described in 4.1.2) separately, since the arrangement of battery and light point(s) ~~may~~ can be different in different light units.

e) Lighting kit: the overall package of integrated components, including one or several lighting units and potentially other loads or appliances.

Figure 5 below illustrates how a hypothetical lighting kit can be subdivided and categorized. The levels of division are labelled with letters, corresponding to the descriptions above. There are six light sources (A) in this kit divided among four arrays (B). Two of the three light points (C) have one array; the third light point (in the middle – C2) has two arrays. Note that one of the arrays – the one with three light sources – is turned off and the other is on. There are two light units (D). The light unit on the left (D1) ~~may~~ can be categorized as portable separate; the other light unit (D2) ~~may~~ can be categorized as fixed ~~separate (fixed~~ indoors~~)~~. Both units are included in a single lighting kit (E). Note that although only lights are illustrated below, other appliances are often included in the kit.

IECNORM.COM : Click to view the full PDF of IEC TS 62257-9-5:2016 RLV
Withdrawn

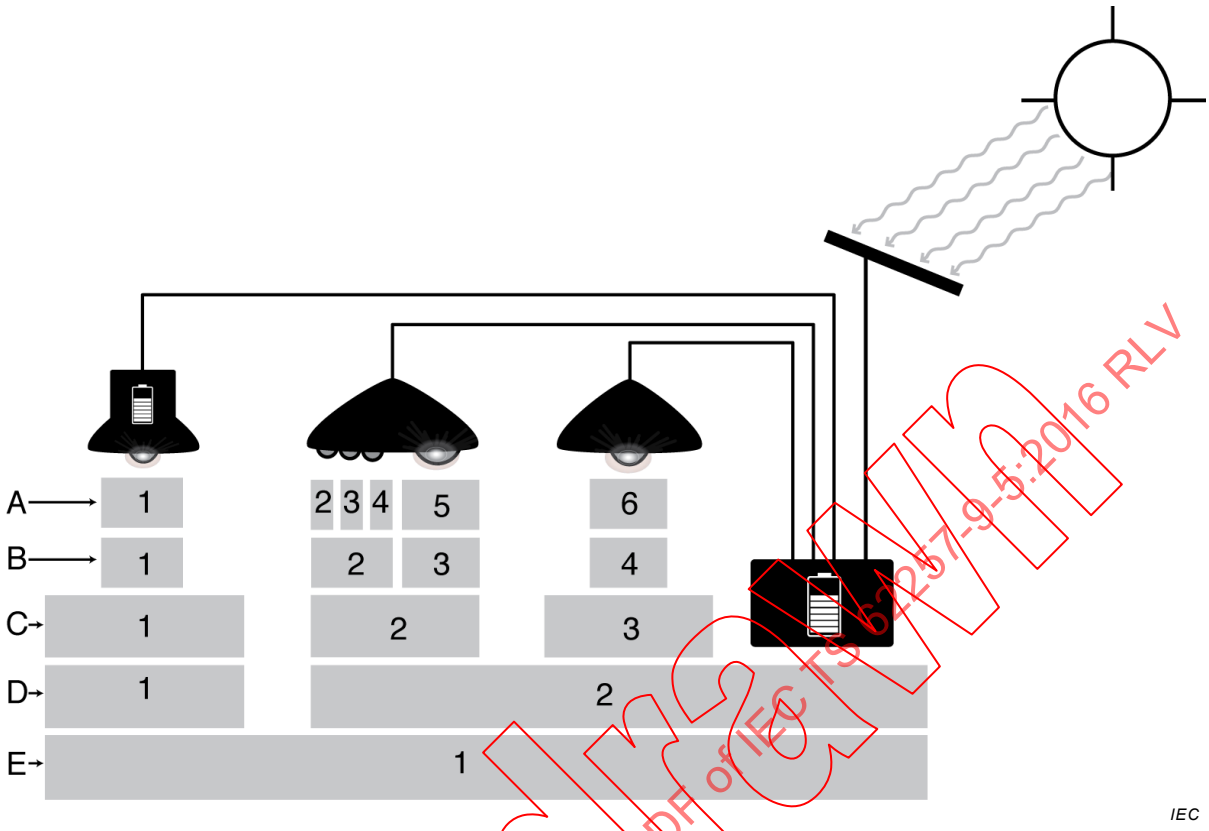

Figure 5 – Division of a lighting kit into subsystems – Illustrative example

4.1.4 Additional system elements

In addition to technical elements, a system ~~may~~ can also include:

- packaging with information about the product,
- user's manual(s),
- various advertising for the product across media: print, radio, television, internet, and others, and/or
- warranty support from the manufacturer, and
- hardware for mounting the PV module or outdoor components.

4.2 System measurements and observations

4.2.1 General

Subclause 4.2 describes aspects of an off-grid lighting product that ~~may~~ can be measured and/or observed to ascertain its quality and performance. The aspects are grouped into categories, and each aspect begins with a description of its relevance. The aspects ~~may~~ can be measured and/or observed using test procedures, which are generally classified as "A" or "B" Class A test procedures will generally result in measurements that are more accurate or less subjective than class B procedures, but class A procedures are also generally more costly to implement. The appropriateness of class A or class B procedures depends on the particular aspect and context of the testing. A class C procedure is specified for selected procedures that may be done with "field modifications" (see Annex AA). The description of each aspect concludes with a description of the result from the test procedure, the units, and an example result. In some cases, multiple pieces of information are grouped in a single aspect for clarity and concision.

IECNORM.COM : Click to view the full PDF of IEC TS 62257-9-5:2016 RLV
Withdrawn

4.2.2 Product design, manufacture, and marketing aspects

4.2.2.1 Arrangement of components

The arrangement of components is a critical aspect to observe because it determines the product category. Different arrangements will offer different utility to the end user.

a) Class A test procedure(s): Annex F: visual screening.

b) Class B test procedure(s): n/a.

c) Result: qualitative description of each separate electronic enclosure and what is housed in or mounted on each.

d) Units: qualitative description.

EXAMPLE Enclosure A contains the battery and has a gooseneck light point protruding from the top. Enclosure B is a remote lighting point with ambient, omnidirectional LEDs mounted on the outside; it is connected to Enclosure A with a 5 m cable. A solar module with a 6 m cable for connection powers Enclosure A.

4.2.2.2 Charging system information

This notes all the available options for charging the device. The key items to note are whether the device can be charged by "central" charging (e.g. via electric grid connection or at a central charging station), "independent" charging (e.g. via an included photovoltaic or electromechanical generator), or both. The available charging options can help determine the utility of the device for users based on the ~~run time~~ performance aspects (see 4.2.8).

a) Class A test procedure(s): Annex F: visual screening.

b) Class B test procedure(s): Annex D: manufacturer self-reported information.

c) Result (for each charging option):

   1) charger type;

   2) central or independent.

d) Units: qualitative type.

EXAMPLE Two charging options: independent solar charging via the included module, and central grid charging via an auxiliary input designed for use with mobile phone chargers (not included).

4.2.2.3 Lighting system information

This describes the types of light sources used in the product and their arrangement. This is important for understanding the general product design.

a) Class A test procedure(s): Annex F: visual screening.

b) Class B test procedure(s): Annex D: manufacturer self-reported information.

c) Result: qualitative description of the type, number, and arrangement of light sources.

d) Units: qualitative description.

EXAMPLE See 4.1.3.

4.2.2.4 Energy storage system information

This describes the type and number of energy storage systems included in the product.

a) Class A test procedure(s): Annex F: visual screening.

b) Class B test procedure(s): Annex D: manufacturer self-reported information.

c) Result: the type and number of batteries in the system.

d) Units: qualitative description.

EXAMPLE Unit A has a 3,7 V lithium-ion battery with a rating of 2 000 mAh; Unit B has a 3,7 V lithium-ion battery with a rating of 1 000 mAh.

IECNORM.COM : Click to view the full PDF of IEC TS 62257-9-5:2016 RLV
Withdrawn

4.2.2.5 Battery easy replaceability

This is an assessment of whether a low-skill technician can easily replace the battery with only a screwdriver (i.e. no soldering). It is important for considering the relevance of battery replacement information. Some batteries have longer lifetimes than others, so replaceability ~~may~~ can be less important.

a) Class A test procedure(s): Annex F: visual screening.

b) Class B test procedure(s): n/a.

c) Result: a yes or no result on whether it is "easy" to replace the battery.

d) Units: yes/no.

EXAMPLE Yes, battery is easily replaceable.

4.2.2.6 Battery general aspects

Those aspects of the battery(-ies) that are important for understanding selection of replacement batteries.

a) Class A test procedure(s): Annex F: visual screening.

b) Class B test procedure(s): Annex D: manufacturer self-reported information or reference component rating.

c) Result (for each battery present):

   1) battery chemistry;
   2) nominal voltage;
   3) package type;
   4) package size;
   5) connection type.

d) Units: qualitative type.

EXAMPLE A sealed lead-acid 4 V prismatic package, 20 mm × 20 mm × 60 mm, wire lead connections.

4.2.2.7 Packaging and user's manual information

Information about the packaging, user's manual, and other consumer-facing information helps establish a baseline for comparing measured values in truth-in-advertising assessments. ~~It may also be important to document if~~ Certain programmes require particular information to be included in the manual, such as instructions for end-of-life disposal, particularly for batteries and other potentially hazardous components; thorough documentation of the packaging, user's manual, and other consumer-facing information allows compliance with these requirements to be assessed.

a) Class A test procedure(s): Annex F: visual screening.

b) Class B test procedure(s): n/a.

c) Result: there are ~~two~~ five types of result:

   1) photographic documentation of the packaging and manual (or digital copies of the original proofs);
   2) notes on the type of manual and which languages are included;
   3) description of the method or pathway for replacing components, including the battery;
   4) specifications of components that could require replacement (fuses, batteries, PV);
   5) instructions for PV and product installation and operation.

d) Units: qualitative type and photographs.

EXAMPLE [Photographs attached to test reports] "The user's manual is a single-sheet included in the package and includes pictograms with explanations in Hindi, English, French, and Swahili.".

Withdrawn
IECNORM.COM : Click to view the full PDF of IEC TS 62257-9-5:2016 RLV

4.2.2.8 Warranty information

The terms and duration of warranty coverage provided to end users are important factors for engendering confidence in stand-alone off-grid lighting and trying to prevent early failure. In practice, servicing warranties is highly variable depending on the structure of supply and service chains.

a) Class A test procedure(s): Annex F: visual screening.

b) Class B test procedure(s): Annex D: manufacturer self-reported information.

c) Result: detailed warranty terms and a "concise" version that highlights the key points of coverage and duration.

d) Units: qualitative type.

EXAMPLE [Detailed warranty terms are documented in scanned attachments to test report] Coverage is against manufacturing defects or under normal use conditions. The product in general is covered for 6 months from the time of purchase; the PV module is warranted for 2 years.

4.2.2.9 Auxiliary ~~features~~ outlets, ports and adapters information

This notes all the auxiliary ~~features~~ outlets and ports present on the product. The ~~incorporation of mobile phone charging or power for radios, for instance,~~ inclusion of USB ports, outlets or mobile phone adapters ~~may~~ can be an important purchasing factor for a consumer.

a) Class A test procedure(s): Annex F: visual screening.

b) Class B test procedure(s): Annex D: manufacturer self-reported information.

c) Result: list of included auxiliary ~~features~~ outlets, ports and adapters.

d) Units: qualitative type.

EXAMPLE The product has a USB port with mobile phone charging capability and a radio.

4.2.2.10 Appliances information

This notes all the appliances included with the product and all appliances the product is advertised to support. Some products include appliances such as radios. Others include advertising stating that they support certain appliances or making claims as to how long they can power certain appliances.

a) Class A test procedure(s): Annex F:visual screening.

b) Class B test procedure(s): Annex D: manufacturer self-reported information.

c) Result: list of included appliances and list of claims related to supporting appliances.

d) Units: qualitative type.

EXAMPLE The product includes a radio and states that it can "charge a radio that runs for 12 h".

4.2.2.11 Other visual screening results

This incorporates various other important results obtained from visual screening (Annex F), including, but not limited to, component dimensions, component masses, the number of light output settings, and provided specifications.

a) Class A test procedure(s): Annex F: visual screening.

b) Class B test procedure(s): Annex D: manufacturer self-reported information.

c) Result: various results including qualitative descriptions and quantitative measurements.

d) Units: qualitative descriptions and quantitative measurements.

EXAMPLE (for one result) The product's lamp unit and control ~~box~~/battery enclosure have masses of 0,3 kg and 1,5 kg, respectively.

IECNORM.COM : Click to view the full PDF of IEC TS 62257-9-5:2016 RLV
Withdrawn

4.2.3 Product durability and workmanship aspects

4.2.3.1 Water protection – enclosure

This provides a description of the product enclosure's ability to keep out water in terms of IP class. For ~~products~~ components intended to be used and/or charged outside, water protection is important for product function as well as user safety.

a) Class A test procedure(s): Annex U: Physical and water ingress protection test according to IEC 60529 or using the alternative methods (U.4.3) if the alternative method results are unequivocal.

b) Class B test procedure(s): Annex U: Physical and water ingress protection test.

c) Result: pass or fail for IP class (second digit) and a description of degree of water protection provided by enclosure.

d) Units: pass or fail and qualitative description.

EXAMPLE The product passes IPx3. The product's enclosure contains tight fitting components, all of which have gaskets to prevent water intrusion.

4.2.3.2 Water protection – circuit protection and drainage

This provides a description of any drainage means incorporated into a product and/or circuit board protection methods used in the product. The incorporation of drainage or circuit board protection is crucial for products intended to be portable or used outdoors that have enclosures providing little to no water intrusion protection.

a) Class A test procedure(s): Annex F: visual screening combined with Annex D: manufacturer self-reported information.

b) Class B test procedure(s): Annex D: manufacturer self-reported information.

c) Result: qualitative description of drainage or circuit protection methods used.

d) Units: qualitative description.

EXAMPLE The product has a conformal coating on its circuit board as well as drainage holes in the base of the enclosure to allow drainage of collected water.

4.2.3.3 Water protection – overall

This combines the protection afforded by the enclosure, circuit protection, and consumer labelling to assess the overall protection from water exposure.

a) Class A test procedure(s): Annex V: level of water protection.

b) Class B test procedure(s): n/a.

c) Result: descriptive assessment of exposure protection by enclosure only, technical means, and overall system. The assessment categories are "no protection," "occasional rain," "frequent rain, "permanent rooftop installation for PV modules," and "permanent outdoor exposure."

d) Units: qualitative type.

EXAMPLE Enclosure only: no protection. Technical means: occasional rain. Overall: occasional rain.

4.2.3.4 Water protection – solar module

This provides a description of an external solar module's ability to keep out water in terms of IP class (if the solar module is integrated into the product enclosure, then 4.2.3.1 already covers the solar module). Solar modules need to be left outside to collect solar energy; therefore, water protection is important for solar module function as well as user safety.

a) Class A test procedure(s): Annex U: Physical and water ingress protection test according to IEC 60529 or using the alternative methods (U.4.4) if the alternative method results are unequivocal.

IECNORM.COM : Click to view the full PDF of IEC TS 62257-9-5:2016 RLV
Withdrawn

b) Class B test procedure(s): Annex U: Physical and water ingress protection test.

c) Result: pass or fail for IP class (second digit) and a description of degree of water protection.

d) Units: pass or fail and qualitative description.

EXAMPLE The product's solar module passes IPx4; the solar module is well-sealed, providing an adequate level of protection against water ingress.

4.2.3.5 Physical ingress protection

This provides a description of the degree of protection from the intrusion of foreign objects a ~~product~~ component's enclosure provides in terms of IP class. Physical ingress protection is important for user safety as well as product functionality.

a) Class A test procedure(s): Annex U: Physical and water ingress protection test according to IEC 60529 or using the alternative methods (U.4.3) if the alternative method results are unequivocal.

b) Class B test procedure(s): Annex U: Physical and water ingress protection test.

c) Result: pass or fail for IP class (first digit) and description of degree of physical ingress protection.

d) Units: pass or fail and qualitative description.

EXAMPLE The product component pass~~es IP 4x~~ IP 2x; the product enclosure's components fit together ~~snugly without gaps~~ well, ~~so that only tiny particulate matter (e.g., dust) could intrude~~ with vents smaller than 12,5 mm.

4.2.3.6 Physical ingress protection – solar module

This provides a description of an external solar module's ability to prevent the intrusion of foreign objects in terms of IP class (if the solar module is integrated into the product enclosure, then 4.2.3.5 already covers the solar module). Solar modules need to be left outside to collect solar energy; therefore, physical ingress protection is important for solar module function as well as user safety.

a) Class A test procedure(s): Annex U: Physical and water ingress protection test according to IEC 60529 or using the alternative methods (U.4.4) if the alternative method results are unequivocal.

b) Class B test procedure(s): Annex U: Physical and water ingress protection test.

c) Result: pass or fail for IP class (first digit) and description of degree of physical ingress protection.

d) Units: pass or fail and qualitative description.

EXAMPLE The product's solar module is estimated to pass IP 3x; the solar module is well-sealed so that only small particles could intrude.

4.2.3.7 Drop resistance

This provides an evaluation of a product's robustness and ability to withstand being dropped. Drop resistance is important for product functionality and user safety and satisfaction in portable components.

a) Class A test procedure(s): Annex W: mechanical durability test.

b) Class B test procedure(s): n/a.

c) Result: pass or fail for functionality, damage, and the presence of user safety hazards.

d) Units: a pass or fail result on whether the DUT functions, incurred damage, and presented a safety hazard to the user.

EXAMPLE When dropped, the product stopped working and its glass LED cover shattered, presenting a safety hazard to the user. Functional: fail. Damage: fail. Safety hazard: fail.

IECNORM.COM : Click to view the full PDF of IEC TS 62257-9-5:2016 RLV
Withdrawn

4.2.3.8 Gooseneck and moving part durability

This provides an evaluation of a product's gooseneck or other moving part's robustness and ability to withstand being torqued through its expected range of motion. Gooseneck and moving part durability is important for product functionality and user safety and satisfaction.

a) Class A test procedure(s): Annex W: mechanical durability test.

b) Class B test procedure(s): n/a.

c) Result: a pass or fail for functionality, damage, and the presence of user safety hazards.

d) Units: a pass or fail result on whether the DUT functions, incurred damage, and presented a safety hazard to the user.

EXAMPLE After the gooseneck/moving part test, the LEDs worked properly but there was visible damage (a cracked housing) that did not pose a hazard. Functional: pass. Damage: fail. Safety: pass.

4.2.3.9 Connector durability

This provides an evaluation of a product's connectors' robustness and ability to withstand plug cycling. Connector durability is important for product functionality and user safety and satisfaction.

a) Class A test procedure(s): Annex W: mechanical durability test.

b) Class B test procedure(s): n/a.

c) Result: a pass or fail for functionality, damage, and the presence of user safety hazards.

d) Units: a pass or fail result on whether the DUT functions, incurred damage, and presented a safety hazard to the user.

EXAMPLE After 400 cycles in the connector test, the PV module's barrel plug socket detached from the DUT enclosure, rendering the PV module connector unusable. Functional: fail. Damage: fail. Safety: pass.

4.2.3.10 Switch durability

This provides an evaluation of a product's switches' robustness and ability to withstand switch cycling. Switch durability is important for product functionality and user safety and satisfaction.

a) Class A test procedure(s): Annex W: mechanical durability test.

b) Class B test procedure(s): n/a.

c) Result: a pass or fail for functionality, damage, and the presence of user safety hazards.

d) Units: a pass or fail result on whether the DUT functions, incurred damage, and presented a safety hazard to the user.

EXAMPLE After 600 cycles in the switch test, the DUT's light switch stopped turning on the DUT. Functional: fail. Damage: fail. Safety: pass.

4.2.3.11 Strain relief durability

This provides an evaluation of a product's strain reliefs' robustness and ability to withstand being pulled. Strain relief durability is important for product functionality and user safety and satisfaction.

a) Class A test procedure(s): Annex W: mechanical durability test.

b) Class B test procedure(s): n/a.

c) Result: a pass or fail for functionality, damage, and the presence of user safety hazards.

d) Units: a pass or fail result on whether the DUT functions, incurred damage, and presented a safety hazard to the user.

EXAMPLE The DUT's strain reliefs all withstood the strain relief test without incurring any damage. Functional: pass. Damage: pass. Safety: pass.

IECNORM.COM : Click to view the full PDF of IEC TS 62257-9-5:2016 RLV
Withdrawn

4.2.3.12 Wiring quality

This provides a qualitative evaluation of a product's wiring quality, including (but not limited to) neatness and connection quality.

a) Class A test procedure(s): Annex F: visual screening.

b) Class B test procedure(s): n/a.

c) Result: a qualitative description of wiring quality.

d) Units: qualitative description and number of failures with respect to key indicators.

EXAMPLE The DUT's wires are neatly arranged (i.e. not tangled or wrapped around one another) and the solder joints are of good quality. No bad joints, pinched wires, or other poor wiring indicators.

4.2.3.13 Battery protection strategy

This provides a quantitative evaluation of a product's battery discharge-recharge protection strategy / algorithm, which is important for battery longevity as well as user safety.

a) Class A test procedure(s): Annex S: charge controller behaviour test.

b) Class B test procedure(s): Annex D: manufacturer self-reported information.

c) Result: deep discharge and overvoltage protection voltages.

d) Units: quantitative description

EXAMPLE The DUT has a deep discharge protection voltage of 1,92 V/cell and an overvoltage protection voltage of 2,4 V/cell.

4.2.4 Lighting durability aspects

4.2.4.1 500 h lumen maintenance

This is a measure of the amount of light degradation after 500 h of operation at a constant voltage, which can provide valuable insight into the quality of the LEDs and/or the DUT's circuitry.

a) Class A test procedure(s): Annex J: lumen maintenance test.

b) Class B test procedure(s): n/a.

c) Result: percentage of lumen output maintained after 500 h of constant operation.

d) Units: percentage (%).

EXAMPLE The DUT maintained 96 % of its original lumen output after 500 h of operation.

4.2.4.2 2 000 h lumen maintenance

This is a measure of the amount of light degradation after 1 000 h and 2 000 h of operation at a constant voltage, which can provide valuable insight into the quality of the LEDs and/or the DUT's circuitry.

a) Class A test procedure(s): Annex J: lumen maintenance test.

b) Class B test procedure(s): n/a.

c) Result: percentage of lumen output maintained after 1 000 h and 2 000 h of constant operation.

d) Units: percentage (%).

EXAMPLE The DUT maintained 96 % and 93 % of its original lumen output after 1 000 h and 2 000 h of operation, respectively.

4.2.4.3 Fluorescent light durability

These are additional checks of durability for fluorescent lights that account for their unique characteristics.

IECNORM.COM : Click to view the full PDF of IEC TS 62257-9-5:2016 RLV

a) Class A test procedure(s): ~~PVRS 7A~~ Cycling test of IEC 62257-12-1.

b) Class B test procedure(s): n/a.

c) Result: a pass or fail for ~~durability~~ cycling tests ~~in PVRS 7A~~ of IEC 62257-12-1.

d) Units: pass or fail.

EXAMPLE The DUT passed the ~~durability~~ cycling tests ~~in PVRS 7A~~ of IEC 62257-12-1.

4.2.5 Battery performance aspects

4.2.5.1 Battery capacity

This is a measure of the quantity of electricity (electric charge), usually expressed in ampere-hours (Ah), which a fully charged battery can deliver under specified conditions, which affects the run time of products.

a) Class A test procedure(s): Annex K: battery test (all chemistries); IEC 61951-1:2013, 7.3.2, for nickel-cadmium batteries; IEC 61951-2:2011, 7.3, for nickel-metal hydride batteries; or IEC 61960:2011, 7.3.1, for lithium-based batteries.

b) Class B test procedure(s): Annex D: manufacturer self-reported information or reference component rating.

c) Result: capacity of the battery at a particular discharge rate.

d) Units: milliampere-hours (mAh) at a discharge rate expressed as the fraction of the battery capacity that is used each hour (I_t A).

EXAMPLE 3 500 mAh at 0,2 I_t A.

4.2.5.2 Battery ~~storage~~ round-trip energy efficiency

This is a measure of how efficient the DUT's battery is at storing energy to deliver for later use.

a) Class A test procedure(s): Annex K: battery test.

b) Class B test procedure(s): n/a.

c) Result: storage efficiency of the battery pack.

d) Units: percentage (%).

EXAMPLE 95 %.

4.2.5.3 Battery storage durability ~~parameters~~

This is a measure of battery capacity degradation from ~~cycling and storing~~ storage, which can indicate batteries that ~~may~~ could degrade prematurely under typical use.

a) Class A test procedure(s): Annex BB: battery durability test.

b) Class B test procedure(s): n/a.

c) Result: percent capacity loss from ~~cycling, percent capacity loss from storing, and number of cycles necessary to reach 60 % of initial battery capacity~~ storage.

d) Units: percentage ~~cycles~~ (%).

EXAMPLE The battery's capacity loss~~es~~ from ~~cycling and storing~~ storage ~~are 80 % and~~ is 90 %~~, respectively. It takes 400 cycles to reach 60 % of the lithium-ion battery's initial capacity.~~

4.2.5.4 Battery nominal voltage

This is important for matching to the other components and determines, along with the battery ampere-hour capacity, the energy capacity of the battery. It depends on the battery chemistry (what materials are used to store energy) and the number of electrochemical cells that are in series.

a) Class A test procedure(s): Annex F: visual screening.

IECNORM.COM : Click to view the full PDF of IEC TS 62257-9-5:2016 RLV
Withdrawn

b) Class B test procedure(s): Annex D: manufacturer self-reported information or reference component rating.

c) Result: nominal voltage of the battery pack.

d) Units: voltage (V).

EXAMPLE 3,6 V.

4.2.6 Solar module aspects

4.2.6.1 Solar I-V curve parameters

These are the key parameters describing solar module performance at standard test conditions (STC: AM 1,5, 25 °C cell temperature, 1 000 W/m^2 irradiance) and typical module operating temperature (TMOT: AM 1,5, 50 °C cell temperature, 1 000 W/m^2 irradiance).

a) Class A test procedure(s): IEC 60904-1.

b) Class B test procedure(s): Annex Q: outdoor photovoltaic module I-V characteristics test.

c) Result (for both STC and TMOT):

1) Open circuit voltage (V_{oc}).
2) Short circuit current (I_{sc}).
3) Maximum power voltage (V_{mpp}).
4) Maximum power current (I_{mpp}).
5) Peak power (P_{mpp}).
6) Voltage temperature coefficient (not dependent on STC nor TMOT).

d) Units: volts (V), amperes (A), watts (W), per degree Celsius (1/°C).

EXAMPLE STC values: V_{oc} = 7,5 V, I_{sc} = 0,55 A, V_{mpp} = 5,8 V, I_{mpp} = 0,50 A, and P_{mpp} = 2,9 W. The module's voltage temperature coefficient is -0,004 2/°C.

4.2.6.2 ~~Solar module~~ Cable length

The length of solar module cables connected to fixed outdoor components ~~is~~ are important because it is one aspect that determines the product category; a minimum length is typically specified for products to "qualify" as having separate PV modules to ensure that a user can place the solar module, or other component, outdoors ~~in a location with good solar access~~ while the other components remain indoors. This has implications for the degree of water protection in quality standards.

a) Class A test procedure(s): Annex F: visual screening.

b) Class B test procedure(s): n/a.

c) Result: There are two main outputs:

1) the length of a solar module cable that is useful for separating the solar module from the enclosure that contains the battery being charged; and
2) the length of the cable between any fixed outdoor component and any other component.

d) Units: metres (m).

EXAMPLE 3,5 m.

~~**4.2.7 Run time aspects**~~

~~**4.2.7.1 General**~~

~~Run time is a key element of performance for lighting products. Each of the run time aspects listed below will be different for different light settings.~~

IECNORM.COM : Click to view the full PDF of IEC TS 62257-9-5:2016 RLV
Withdrawn

~~4.2.7.2 Full-battery run time~~

~~The full-battery run time is the duration of service provided to end-users from a fully charged battery and depends on the system-level performance for a particular setting. Regardless of the charging method, the full-battery run time is a relevant metric. For products that recharge centrally, it represents their hours of autonomy until the product shall be returned to a charging station (and potentially a fee shall be paid). For solar-charged products, it represents the ability to store excess energy for a rainy day. For electromechanically-charged products, it represents the maximum period the product can be operated in between charges.~~

~~a) Class A test procedure(s): Annex M: full-battery run time test~~

~~b) Class B test Standards(s): n/a~~

~~c) Class C test procedure: Annex AA: field testing methods~~

~~d) Result: hours of operation to 70 % of the initial brightness when beginning with a fully charged battery; sometimes also known as "autonomous run time."~~

~~e) Units: hours (h)~~

~~f) Example: 9,3 h~~

4.2.7 Electrical characteristics

4.2.7.1 Appliance voltage compatibility

This provides an assessment of whether an included appliance can safely and properly operate over the entire set of operating conditions of the DUT, including discharging with a deeply discharged battery and charging with a nearly full battery.

a) Class A test procedure(s): Annex EE: assessment of DC ports.

b) Class B test procedure(s): n/a.

c) Result: pass or fail for functionality, damage, and safety.

d) Units: pass/fail; qualitative description.

EXAMPLE The DUT remained functional after the test and no damage or safety hazard was present.

4.2.7.2 Power consumption

The power consumed by an appliance or lighting appliance is an important metric for use in off-grid applications in which the supply of energy is limited. The power consumption is measured in order to calculate the run time for systems with included appliances.

a) Class A test procedure(s): Annex FF: appliance tests.

b) Class B test procedure(s): n/a.

c) Result: DC power.

d) Units: watts (W).

EXAMPLE 1,50 W.

4.2.7.3 Circuit and overload protection

This provides an assessment of the system's PV overvoltage protection, output overload protection, and safeguards against miswiring in systems that include ports or outlets.

a) Class A test procedure(s): Annex DD: protection tests.

b) Class B test procedure(s): Annex D: manufacturer self-reported information.

c) Result: a pass or fail result on whether the unit had adequate protection, functioned, or showed damage, fault indications or safety hazards after tests. Tables with quantitative and qualitative results of the voltage range and miswiring protection tests.

d) Units: volts (V), pass or fail results on whether the unit had adequate protection, functioned, or showed damage, fault indications or safety hazards after test.

IECNORM.COM : Click to view the full PDF of IEC TS 62257-9-5:2016 RLV
Withdrawn

EXAMPLE The DUT uses appropriately sized fuses to provide adequate circuit protection. Spare fuses are included and the fuse size is noted on the product casing.

4.2.7.4 DC ports

This provides an assessment of the system's DC ports.

a) Class A test procedure(s): Annex EE: assessment of DC ports.

b) Class B test procedure(s): n/a.

c) Result: minimum, typical, and maximum port voltages, tables and plots of voltage, current, power and efficiency of each port.

d) Units: volts (V), amperes (A), watts (W), percentage (%).

4.2.8 Performance aspects

4.2.8.1 General

Energy availability, component run times and light output are key elements of performance for stand-alone lighting kits. Some of the aspects listed below will be different for different light settings and appliance combinations.

4.2.8.2 Daily energy service

The daily energy service is the duration of service provided to end users after one day of solar charging and depends on the system-level performance for a particular setting. The standard solar charging day is defined as an incident solar resource of 5 kWh/m^2. This is an important metric because it is an estimate of the day-to-day services users can expect in ideal charging conditions. The daily energy service depends on the system-level performance for a particular light setting and combination of appliances.

a) Class A test procedure(s): Annex M: full-battery run time test, Annex R: solar charge test, Annex GG: energy service calculations.

b) Class B test Standards(s): n/a.

c) Result: watt·hours per day of energy available after a battery is charged from empty for one standard solar day.

d) Units: watt·hours (Wh).

EXAMPLE 60 Wh/day.

4.2.8.3 Solar-day lighting run time

The solar-day run time is the duration of service provided to end users from one day of solar charging and depends on the system-level performance for a particular setting. The standard solar charging day is defined as an incident solar resource of 5 kWh/m^2. This is an important metric because it is an estimate of the day-to-day services users can expect in ideal charging conditions. It is important to note that variations in available solar energy (due to climate, weather, or user behaviour) will result in commensurate differences in actual run time from solar charging.

a) Class A test procedure(s): Annex R: solar charge test; or Annex M: full-battery run time test, Annex R: solar charge test, and Annex GG: energy service calculations.

b) Class B test procedure(s): n/a

c) Class C test procedure: Annex AA: field testing methods

d) Result: hours of operation to 70 % of the initial brightness after the battery is charged from empty for one standard solar day ~~(defined above)~~.

e) Units: hours (h)

EXAMPLE 4,5 h.

IECNORM.COM : Click to view the full PDF of IEC TS 62257-9-5:2016 RLV
Withdrawn

4.2.8.4 Solar-day appliance run time

The solar-day run time is the duration of service provided to end users from one day of solar charging and depends on the system-level performance for a particular setting. The standard solar charging day is defined as an incident solar resource of 5 kWh/m^2. This is an important metric because it is an estimate of the day-to-day services users can expect in ideal charging conditions. It is important to note that variations in available solar energy (due to climate, weather, or user behaviour) will result in commensurate differences in actual run time from solar charging.

a) Class A test procedure(s): Annex R: solar charge test; or Annex M: full-battery run time test, Annex R: solar charge test, and Annex GG: energy service calculations.

b) Class B test procedure(s): n/a.

c) Result: hours of operation after the battery is charged from empty for one standard solar day.

d) Units: hours (h).

EXAMPLE 4,5 h.

4.2.8.5 Lighting full-battery run time

The full-battery run time is the duration of service provided to end users from a fully charged battery and depends on the system-level performance for a particular setting. Regardless of the charging method, the full-battery run time is a relevant metric. For products that recharge centrally, it represents their hours of autonomy until the product shall be returned to a charging station (and potentially a fee shall be paid). For solar-charged products, it represents the ability to store excess energy for a rainy day. For electromechanically-charged products, it represents the maximum period the product can be operated in between charges.

a) Class A test procedure(s): Annex M: full-battery run time test, alone or in conjunction with Annex GG: energy service calculations.

b) Class B test Standards(s): n/a.

c) Class C test procedure: Annex AA: field testing methods.

d) Result: hours of operation to 70 % of the initial brightness when beginning with a fully charged battery; sometimes also known as "autonomous run time."

e) Units: hours (h).

EXAMPLE 9,3 h.

4.2.8.6 Grid-charge run time

The grid-charge run time is the run time for DUTs that are centrally charged (i.e. with a central charging station or the grid). This is an important metric because it provides the expected run time after a full day of grid charging.

a) Class A test procedure(s): Annex O: grid charge test.

b) Class B test procedure(s): n/a.

c) Result: hours of operation to 70 % of the initial brightness after the battery is grid charged from empty.

d) Units: hours (h).

EXAMPLE 6,3 h.

4.2.8.7 Electromechanical charge ratio

The electromechanical charge ratio is the response factor for electromechanical (i.e. dynamo) charging – a ratio of run time to charging time (i.e. with an electromechanical charger that is included with the device and not at a central electromechanical charging station). The electromechanical charging is done at a controlled rate. This is an important metric because it

IECNORM.COM : Click to view the full PDF of IEC TS 62257-9-5:2016 RLV
Withdrawn

allows one to estimate the duration of user effort required each day for a given level of service.

a) Class A test procedure(s): Annex P: electromechanical charge test.

b) Class B test procedure(s): n/a.

c) Result: ratio of time of operation to charging time.

d) Units: unitless.

EXAMPLE 12 min run time per 1 min of charging time.

4.2.9 Light output aspects

4.2.9.1 Average luminous flux output

Average luminous flux output is the light output of a DUT when it is operated at the ~~average operating point from the full-battery run time test~~ standard operating voltage or when an individual lighting appliance is measured at the typical port voltage. This is a key metric that compares the overall light output of DUTs.

a) Class A test procedure(s): CIE 084, CIE 127, IESNA LM-78-07, or IESNA LM-79-08.

b) Class B test procedure(s): Annex I: light output test.

c) Class C test procedure(s): Annex AA: field testing methods.

d) Result: average luminous flux.

e) Units: lumens (lm).

EXAMPLE 95,6 lm.

4.2.9.2 Full width half maximum (FWHM) angles

The full width half maximum angle is a metric used to understand the light distribution of a DUT and is the total included angle for which the illumination is greater than or equal to half the illumination at the brightest point in the plane.

a) Class A test procedure(s): CIE 084, CIE 127, IESNA LM-79-08.

b) Class B test procedure(s): Annex T: light distribution test.

c) Result: vertical and horizontal FWHM angles.

d) Units: degrees (°).

EXAMPLE The DUT's horizontal and vertical FWHM angles are both 65°.

4.2.9.3 Average light distribution characteristics

A light distribution is the illuminance "map" of a DUT. This metric is useful for determining the utility with respect to task lighting. The test is done with the DUT operating at the average operating point from the full-battery run time test.

a) Class A test procedure(s): CIE 084, CIE 127, IESNA LM-79-08.

b) Class B test procedure(s): Annex T: light distribution test.

c) Class C test procedure(s): Annex AA: field testing methods.

d) Result: constant-voltage usable area at a specified distance.

e) Units: square metres (m^2) and lux (lx).

EXAMPLE The DUT's usable area at a distance of ~~0,5~~ 0,75 m is 0,76 m^2 and the DUT's work surface illuminance is 40 lux.

IECNORM.COM : Click to view the full PDF of IEC TS 62257-9-5:2016 RLV
Withdrawn

4.2.9.4 Colour characteristics

The colour characteristics of light ~~determine how accurately the light renders colours (CRI) and the colour of the light expressed as a temperature in kelvin~~ include the colour rendering index (CRI) and the correlated colour temperature (CCT).

a) Class A test procedure(s): Annex I: light output test.

b) Class B test procedure(s): n/a.

c) Result: CRI value and colour temperature.

d) Units: CRI is unitless and the colour temperature is in kelvin (K).

EXAMPLE The CRI is 80 and the colour temperature is 7 000 K.

4.2.10 Battery-charging circuit efficiency

The battery-charging circuit efficiency, or generator-to-battery charging efficiency, is a measure of how efficient the DUT electronics are at feeding generated energy into the battery.

a) Class A test procedure(s): IEC 62509.

b) Class B test procedure(s): Annex R: solar charge test.

c) Result: battery-charging circuit efficiency.

d) Units: percentage (%).

EXAMPLE 90 %.

4.2.11 Self-certification aspects

4.2.11.1 Product and manufacturer information

Manufacturer-reported product and manufacturer information is important for tracking purposes as well as for ensuring the test lab has up-to-date product information.

a) Class A test procedure(s): Annex D: manufacturer self-reported information.

b) Class B test procedure(s): n/a.

c) Result: various qualitative and quantitative information.

d) Units: qualitative and quantitative.

EXAMPLE The product's free-on-board price is USD 30, it is sold in Kenya and India, etc.

4.2.11.2 Warranty coverage

Warranty coverage goes beyond the terms of a warranty and provides detail on coverage in a particular location. It is typically only provided in cases where it is necessary to verify coverage in a particular town or region.

a) Class A test procedure(s): Annex D: manufacturer self-reported information.

b) Class B test procedure(s): n/a.

c) Result: qualitative description.

d) Units: qualitative description.

EXAMPLE The support in [region name] is provided by a small network of technicians who have been trained to repair products by [manufacturer or distributor name]. For repairs that are beyond the scope of their capabilities, replacement products are provided. The consumers in [region name] can access warranty service by dialling a phone number that is on a sticker placed on the original packaging.

4.2.11.3 Third-party marks and certifications

Third-party marks and certifications (e.g., UL) can be an important aspect in the eyes of consumers and investors, alike.

IECNORM.COM : Click to view the full PDF of IEC TS 62257-9-5:2016 RLV
Withdrawn

a) Class A test procedure(s): Annex D: manufacturer self-reported information.

b) Class B test procedure(s): n/a.

c) Result: qualitative marks and certifications.

d) Units: qualitative type.

EXAMPLE ISO 9001 certified.

~~**4.2.11 Water protection integrated assessment**~~

~~This combines the protection afforded by the enclosure, circuit protection, and consumer labelling to assess the overall protection from water exposure.~~

~~a) Class A test procedure(s): : level of water protection~~

~~b) Class B test procedure(s): n/a~~

~~c) Result: descriptive assessment of exposure protection by enclosure only, technical means, and overall system. The assessment categories are "no protection," "occasional rain," and "frequent rain."~~

~~d) Units: qualitative type~~

~~e) Example: Enclosure only: no protection. Technical means: occasional rain. Overall: occasional rain~~

5 Product specification

5.1 General

Quality standards and warranty requirements (Figure 6)~~, and performance targets~~ are used to interpret the measurements and observations made about a product. Together they form a product specification.

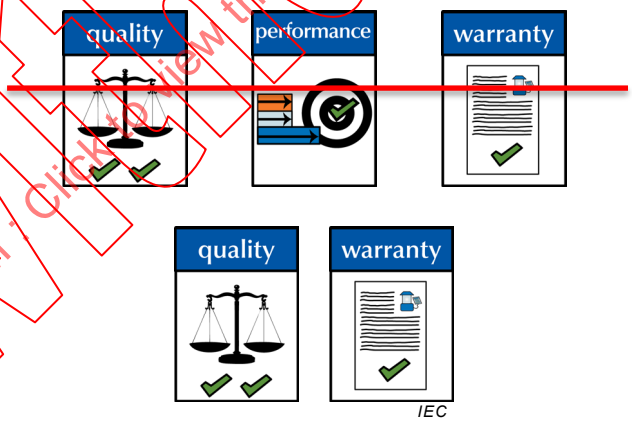

Figure 6 – The two components of a product specification

- Quality standards set a minimum level of durability and protect buyers and users from false advertising claims.
- Warranty requirements set a minimum level of user protection from early failure.
- ~~**Performance targets** set a recommended level of service and features.~~

Each criterion in a specification refers to a particular aspect of the product, as listed in 4.2, and requires a minimum level of quality, service, or performance.

The standards and requirements~~, and targets~~ should be appropriate for the goals of the organization or individual who is using them as a framework for quality assurance and should consider the following factors:

IECNORM.COM : Click to view the full PDF of IEC TS 62257-9-5:2016 RLV
Withdrawn

- availability of products on the market with the necessary quality and performance;
- ability of buyers to pay for the products;
- diversity of end user needs;
- tolerance for manufacturing variation.

Clause 5 describes the framework for standards and requirements~~, and targets~~ in general and offers insights on the best practices for creating a product specification. It includes a ~~"blank"~~ template product specification followed by guidance on ~~"filling in"~~ completing each section. Annex A presents an example specification for off-grid lighting market support programme qualification. ~~Annex B presents another example, for bulk procurement.~~

5.2 Applications

Product specifications that include some combination of quality standards and warranty requirements~~, and performance targets~~ can support a broad range of quality assurance needs. Table 1 lists examples of how they are applied depending on the type of quality assurance framework.

Table 1 – Applications of product specifications

Type of QA framework	Example(s) of applying Clause 5
General market support	Use quality standards and general warranty requirements to qualify for institutional market support~~; provide additional services if performance targets are also met~~. Use quality standards to qualify for ~~a business-to-business seal~~ "verified product" programs. Use quality standards and other requirements to qualify for investment or financing.
Manufacturing/ distribution	For manufacturers: incorporate quality standards ~~and performance targets~~ from market support programmes or distributors in the design and production QC processes. For distributors: set minimum quality standards and warranty requirements~~, and/or performance targets~~ for products to identify suppliers.
Bulk procurement	Set minimum quality standards and warranty requirements~~, and/or performance targets~~ for products to qualify in a request for offers. If the project is in a specific location, the warranty requirements may also include specific levels of service in that particular area.
Trade regulation	Set minimum quality standards for tax exemption or customs.

5.3 Quality assurance principles

~~5.3.1 General~~

The framework for considering quality standards and warranty requirements~~, and performance targets~~ presented in this part of IEC 62257 is designed to support broad types of programmes and institutions in the off-grid lighting market. The following key principles guide the framework.

- Balance quality and affordability for price-sensitive buyers – it does not matter how well products perform if the target users cannot afford them.
- Encourage innovation and technological diversity. Wherever possible, be open-ended in the technical approaches that are allowed.
- Empower buyers to choose the right product for their needs and budget by focusing product specifications and communication on outcomes for end users.
- Use low-cost, rigorous, targeted tests to match the general affordability requirements for the market and accommodate both incremental and innovative changes to product design. The tests should be feasible for use by a broad set of potential users.
- Focus quality standards on elements of a product that are difficult for typical buyers to assess themselves, like truth-in-advertising and durability.

IECNORM.COM : Click to view the full PDF of IEC TS 62257-9-5:2016 RLV
Withdrawn

- Focus warranty requirements on providing a baseline of support.
- ~~Focus performance targets on bottom-line user experience metrics like run time and brightness.~~

~~**5.3.2 Rationale for dividing quality, warranty, and performance**~~

~~Quality standards, warranty requirements, and performance targets are considered separately for two reasons:~~

- ~~Allows programmes and institutions the flexibility to establish targets with their goals in mind:~~
  - ~~Quality standards deal with basic consumer protection (from early product failure, unsafe operation, or false advertising) and typically are a "baseline" or minimum level.~~
  - ~~Warranty requirements deal with aspects of the product that are not controlled at the factory – the service available for products is typically very dependent on the supply chain and geography.~~
  - ~~Performance targets are typically in addition to quality standards and define service levels that should be met. The diversity of needs and ability of end users to pay shall be known to properly set performance targets.~~
- ~~Enables tiered service offerings for market support programmes. For instance, it is possible to have a tiered support system in which certain services only require meeting quality standards and warranty requirements while others also require performance targets.~~

5.4 Product specification framework description

5.4.1 General

Subclause 5.4 describes a framework for creating product specification documents for off-grid lighting. First, a blank specification 5.4.2 is provided that lists all the pieces that may be specified. Next, 5.4.3 describes guidelines for setting tolerances in a product specification. Finally, the main sections in a specification are described in more detail with notes and guidance (5.4.4, 5.4.5).

~~There are example product specifications in and ; one is for general market support programmes Annex A and the other is a "sample tender" for bulk purchasing.~~

An example product specification for general market support programmes is in Annex A.

A product specification has ~~six~~ five parts:

a) Scope: defines the applicability and use of the quality standards ~~and performance targets~~.

b) Test requirements: defines requirements for test result validity.

c) Product category requirements: unambiguously defines the categories that may be referenced later.

d) Quality standards: lists quality-related aspects and minimum or required results for each aspect with a tolerance; may be subdivided by product category.

e) Warranty requirements: lists requirements for minimum levels of warranty support.

~~f) Performance targets: lists performance-related aspects and minimum or required results for each aspect with a tolerance; may be subdivided by product category~~

5.4.2 ~~Blank~~ Product specification ~~document~~ template

5.4.2.1 General

Subclause 5.4.2 is a blank ~~framework~~, rough template for setting quality standards and warranty requirements~~, and performance targets~~ to support the goals of a programme or

IECNORM.COM : Click to view the full PDF of IEC TS 62257-9-5:2016 RLV
Withdrawn

institution. Note that in many applications certain criteria or entire categories of criteria ~~may~~ do not apply and should be removed. Text in *italics* is intended for replacement and describes what should go in each space.

5.4.2.2 Scope

Describe the intended use of the product specification, the contents in general, and provide guidance on how to use the document.

5.4.2.3 Test requirements

Specify the level of testing that is required. Typically this is quality test method (QTM) testing (see Clause 6).

Describe any product sampling requirements for qualification testing.

Specify the number of light output settings required to be measured for products with multiple settings. Typically, at least one set of test results should fully characterize the performance on the highest light output setting.

5.4.2.4 Product category requirements

Describe which product categories (see 4.1.2) are covered/allowed.

Describe any other requirements or eligibility criteria for products that are categorical (e.g. shall be solar charged, shall be plug-and-play, shall be low-voltage, batteries shall be replaceable).

Qualification as a "separate" PV module requires meeting the criteria listed in Table 2:

Table 2 – Qualification as separate PV module

Criterion	Aspect(s)	Required value
PV module cable length	4.2.6.2 Cable length	*Define the length in metres that is required for qualification as a separate PV module.*

5.4.2.5 Quality standards

The product shall meet each of the criteria listed in the truth-in-advertising (Table 3), safety and durability (Table 4), and end user support (Table 5) tables.

IECNORM.COM : Click to view the full PDF of IEC TS 62257-9-5:2016 RLV
Withdrawn

Table 3 – Truth-in-advertising tolerance

Truth-in-advertising criterion	Aspect(s) considered in assessment	Requirement
System performance tolerance – numeric ratings	4.2.8 Performance aspects 4.2.9 Light output aspects Others, if applicable	*Define the tolerance for deviation from ratings.*
System components tolerance – numeric ratings	4.2.5 Battery performance aspects 4.2.6 Solar module aspects 4.2.7.1 Appliance voltage compatibility 4.2.7.2 Power consumption 4.2.7.4 DC ports Others, if applicable	*Define the tolerance for deviation from ratings.*
Other numeric ratings tolerance	Multiple	*Define the tolerance for deviation from ratings.*
Overall truth–in-advertising statement	Multiple	*Include an overall description of the requirements for truth-in-advertising that are not covered by the requirements above.*

IECNORM.COM : Click to view the full PDF of IEC TS 62257-9-5:2016 RLV
Withdrawn

Table 4 – Safety and durability standards *(1 of 2)*

Safety or durability criterion	Aspect(s) considered in assessment	Product category (form factor and/or technology)	Requirement
Level of water exposure protection (*overall, technical, or enclosure-only*)	~~4.2.11 Water protection integrated assessment~~ 4.2.3.1 Water protection – enclosure 4.2.3.2 Water protection – circuit protection and drainage 4.2.3.3 Water protection – overall 4.2.3.4 Water protection – solar module 4.2.11.1 Product and manufacturer information 4.2.2.7 Packaging and user's manual information	Category 1	*Define level of protection in terms of water protection integrated assessment:* *No protection, occasional rain, frequent rain, or permanent outdoor exposure.*
		Category 2	*Define level of protection in terms of water protection integrated assessment.*
Physical ingress protection	4.2.3.5 Physical ingress protection 4.2.3.6 Physical ingress protection – solar module	Category 1	*Define level of protection in terms of IP class.*
		Category 2	*Define level of protection in terms of IP class.*
Mechanical durability – drop test	4.2.3.7 Drop resistance	Category 1	*Define maximum number of failures out of the number that are tested for damage, functionality, and safety.*
		Category 2	*Define maximum number of failures out of the number that are tested for damage, functionality, and safety.*
Mechanical durability – goosenecks and moving parts	4.2.3.8 Gooseneck and moving part durability	Products with goosenecks/moving parts	*Define maximum number of failures out of the number that are tested for damage, functionality, and safety.*
Mechanical durability – connectors	4.2.3.9 Connector durability	Products with connectors	*Define maximum number of failures out of the number that are tested for damage, functionality, and safety.*
Mechanical durability – switches	4.2.3.10 Switch durability	All products	*Define maximum number of failures out of the number that are tested for damage, functionality, and safety.*
Mechanical durability – strain relief	4.2.3.11 Strain relief durability	Products with connectors	*Define maximum number of failures out of the number that are tested for damage, functionality, and safety.*
Workmanship	4.2.3.12 Wiring quality	All products	*Define maximum number of samples with bad solder joints, poor wiring, etc. out of the number that are tested.*
Battery durability	4.2.3.13 Battery protection strategy 4.2.5.3 Battery storage durability 4.2.11.1 Product and manufacturer information 4.2.11.3 Third-party marks and certifications	All products	*Define a minimum level of battery protection that will protect the product's battery and the user. Define maximum capacity loss following battery durability test.*
~~Lumen maintenance~~	~~4.2.4.2 2 000 hour lumen maintenance~~	~~All products~~	~~Define maximum number of samples that may fail specified lumen maintenance criteria out of the number that are tested.~~

IECNORM.COM : Click to view the full PDF of IEC TS 62257-9-5:2016 RLV
Withdrawn

Table 4 *(2 of 2)*

Safety or durability criterion	Aspect(s) considered in assessment	Product category (form factor and/or technology)	Requirement
Lumen maintenance	4.2.4.2 2 000 h lumen maintenance	All products	*Define maximum number of samples that may fail specified lumen maintenance criteria out of the number that are tested.*
Fluorescent light durability	4.2.4.3 Fluorescent light durability	Products with fluorescent lights	*Define maximum number of failures out of the number that are tested.*
AC-DC charger safety	4.2.11.1 Product and manufacturer information 4.2.11.3 Third-party marks and certifications	Products with AC-DC chargers included	*Define acceptable safety approval marks and certifications for AC-DC chargers.*
Hazardous substances ban	4.2.2.4 Energy storage system information 4.2.2.6 Battery general aspects 4.2.11.1 Product and manufacturer information	All products	*Define allowable battery chemistries.*
Cable specifications	4.2.11.1 Product and manufacturer information 4.2.11.3 Third-party marks and certifications	All products	*Define acceptable approval marks and certifications for outdoor cables*
Circuit and overload protection, PV overvoltage protection, and miswiring protection	4.2.7.3 Circuit and overload protection	All products	*Define maximum number of failures and number of samples to be tested*

Table 5 – End user support standards

Truth-in-advertising criterion	Aspect(s) considered in assessment	Requirement
Information on product design, utilization, and care	4.2.2.7 Packaging and user's manual information	*Define if there are requirements for consumer-facing information on packaging or in a user's manual, such as end-of-life disposal instructions, specifications of replaceable components, and instructions for product installation and maintenance.*
Other	4.2.2.11 Other visual screening results	*Define other product requirements that support end users to maintain the quality of the product.*

5.4.2.6 Warranty requirements

The product shall meet each of the end user support requirements listed in Table 6.

IECNORM.COM : Click to view the full PDF of IEC TS 62257-9-5:2016 RLV
Withdrawn

Table 6 – End user support requirements

Support type	Aspect(s)	Requirement
Maintenance and warranty terms	4.2.2.8 Warranty information	*Define minimum warranty requirements (length, components covered, etc.)*
Service capabilities	4.2.11.2 Warranty coverage	*Define "on the ground" requirements for warranty service (typically only for projects in a specific location)*

~~5.4.2.7 Performance targets~~

~~In addition to meeting the quality standards and warranty requirements, at least one product setting shall meet one of the run time criteria (Table 7) and one of the lighting service criteria (Table 8). The product shall also meet the additional features criteria (Table 9).~~

~~**Table 7 – Run time criteria for performance targets**~~

~~Run time criterion~~	~~Aspect(s)~~	~~Requirement~~
~~Central charged product full battery run time~~	~~4.2.7.4 Grid charge run time~~ ~~4.2.7.2 Full battery run time~~	~~*Define minimum full battery run time in hours (h) and compliance tolerance (%).*~~
~~Independently solar charged product – solar day run time~~	~~4.2.7.3 Solar day run time~~	~~*Define minimum solar day run time in hours (h) and compliance tolerance (%).*~~
~~Independently electromechanically charged product – electromechanical run time characteristics~~	~~4.2.7.5 Electromechanical charge ratio~~ ~~4.2.7.2 Full battery run time~~	~~*Define minimum electromechanical charge run time ratio (unitless) and full-battery run time in hours (h) with compliance tolerances (%).*~~

~~**Table 8 – Lighting service criteria for performance targets**~~

~~Light output criterion~~	~~Aspect(s)~~	~~Requirement~~
~~General illumination service~~	~~4.2.8.1 Average luminous flux output~~	~~*Define minimum average lumen output (lm) through the product's discharge and compliance tolerance (%).*~~
~~Task lighting service~~	~~4.2.8.3 Average light distribution characteristics~~	~~*Define minimum average useable area (m^2) at a specified distance through the product's discharge and compliance tolerance (%).*~~

~~**Table 9 – Additional features criteria for performance targets**~~

~~Support Type~~	~~Aspect(s)~~	~~Requirement~~
~~Mobile phone charging~~	~~4.2.2.9 Auxiliary features information~~	~~*Define minimum included auxiliary features (e.g., mobile phone charging with at least three different connectors).*~~
~~Other~~	~~4.2.2.9 Auxiliary features information~~	~~*Define other required features.*~~

5.4.3 Tolerances

Tolerances are an allowable deviation from the target value for a particular criterion in a product specification and are part of the product specification. In the case of truth-in-advertising, the target value is what is advertised. ~~For performance targets, the target value is the minimum performance level.~~ Durability tests and other pass/fail criteria also have a target – passing the test.

IECNORM.COM : Click to view the full PDF of IEC TS 62257-9-5:2016 RLV

Tolerances should be set carefully, considering how the measured or observed values from a test (with a limited number of samples) characterize the true quality or performance aspects of every product in the market. The sample size, expected manufacturing tolerance, and testing uncertainty should each be considered.

There are trade-offs between protecting buyers/end users and suppliers from "false positive" and "false negative" results, respectively. Tighter tolerance tends to protect buyers/end users better from poor quality or performance products but will also result in a higher number of good quality or performance products being excluded based on non-representative sampling or test results. The dynamic is reversed for looser tolerances.

The type of tolerance depends on the aspect being specified:

a) Qualitative: aspects that are descriptive (e.g. type of light source) do not typically have a tolerance.

b) Numeric: aspects that are described with a measured value (e.g. battery capacity) should have a tolerance defined in terms of percent deviation of the average DUT measurement from a particular value. Often, it is allowable for the test result to deviate in one "direction" but not the other. For instance, it is allowable to over-perform on the run time but not underperform. There may also be a tolerance defined for the variance in results of the DUT.

   In general, the percent deviation from a target value is calculated using the following formula:

$$D = 100\% \times \frac{x_{\text{meas}} - x_{\text{target}}}{x_{\text{target}}}$$

$$D = 100\,\% \cdot \frac{x_{\text{target}} - x_{\text{meas}}}{x_{\text{target}}}$$

   where:

   D is the percent deviation in a numeric value;

   x_{target} is the target value;

   x_{meas} is a measured value or the average of the measured values for each sample.

c) Boolean: aspects that are described in terms of "pass/fail" (e.g. drop test) should have a tolerance defined in terms of the number of allowable failures out of a set number of trials or tests. Note that the statistical power of Boolean results for predicting population pass/fail rates is not very high with small sample sizes. The implication is that it is not possible to accurately predict population failure rates for a particular aspect from a small sample size, and it is often appropriate to allow some small but reasonable failure rate to avoid false negative results.

5.4.4 Quality standards criteria

5.4.4.1 General

Subclause 5.4.4 describes the quality standards aspects and give guidance on how to implement a quality standard.

There are several categories of quality criteria listed below. For each category, it is important for a set of quality standards to specify:

- which aspects are referenced by the criteria,
- what level of failure or minimum quality level is acceptable for each aspect, and
- which product categories are subject to each criterion if there are differences across categories.

IECNORM.COM : Click to view the full PDF of IEC TS 62257-9-5:2016 RLV
Withdrawn

5.4.4.2 Truth-in-advertising

The goal of a truth-in-advertising standard (see Table 7) is to protect buyers and end users from false advertising claims. It is particularly important to ensure that the description of advertised values corresponds with test results in cases where ~~end users~~ buyers (anywhere in the supply chain) will make product purchasing decisions based partly or solely on advertising and packaging or where users have expectations set by them.

In practice it is ideal to check any advertised quality or performance statements against the test results, keeping in mind that often the framing or messaging for advertised statements is different from test conditions and that there is always inherent uncertainty in the test result. In cases where the advertised values will not be directly comparable to test results, care should be taken to avoid wrongly identifying false advertising while maintaining vigilance for buyers.

For aspects that are described with numeric information, a tolerance should be defined for truth-in-advertising.

For aspects that are described with qualitative or Boolean information, judgement is required to discern if the test results match advertised values.

Table 7 – Truth-in-advertising criteria for quality standards (*1 of 2*)

Truth-in-advertising criterion	Aspect(s) considered in assessment	Standard specification	~~Notes~~ Remarks
System performance tolerance – numeric ratings	4.2.8 ~~Run time~~ Performance aspects 4.2.9 Light output aspects Others, if applicable	The tolerance between the rated performance and measured performance.	These are key aspects for end user experiences with the product, but also tend to have test results with higher uncertainty due to a combination of intrinsic manufacturing variation and test uncertainty due to the system-level nature of the aspects.
System components tolerance – numeric ratings	4.2.5 Battery performance aspects 4.2.6 Solar module aspects 4.2.7.1 Appliance voltage compatibility 4.2.7.2 Power consumption 4.2.7.4 DC ports Others, if applicable	The tolerance between the rated performance and measured performance.	These aspects, while important, have less impact on the overall user experience in general. They are more important for identifying replacement parts.

IECNORM.COM : Click to view the full PDF of IEC TS 62257-9-5:2016 RLV
Withdrawn

Table 7 *(2 of 2)*

Other numeric ratings tolerance	Multiple	The tolerance between the rated performance and measured performance.	n/a
Overall truth-in-advertising statement	Multiple	Describe the general policy for interpreting truth-in-advertising requirements. Suggested statement: "~~Each~~"All advertised features shall be functional. Any description of the product that appears on the packaging, inside the package, and in any other ~~media~~ medium (e.g. internet) should be truthful and accurate. No statements should mislead buyers or end users about the features or utility of the product. Any user interfaces (charge indicators, SOC estimates, etc.) shall be accurate."	It is important to lay out a broad expectation of truth-in-advertising and to interpret it on a case-by-case basis.

Table 8 includes notes with guidance on aspects that are often part of a truth-in-advertising check because they are commonly advertised.

Table 8 – ~~Notes~~ Remarks on common truth-in-advertising aspects

Aspect(s)	~~Notes~~ Remarks
4.2.8.2 Daily energy service	Depends on the desired services/appliances.
4.2.8.5 Lighting full-battery run time	Depends on the setting.
4.2.8.3 Solar-day lighting run time	Depends on the setting and often depends on the assumptions about solar resource, which ~~may be~~ is location-dependent.
4.2.8.6 Grid-charge run time	Depends on the setting.
4.2.8.7 Electromechanical charge ratio	Depends on the setting.
4.2.9.1 Average luminous flux output	Normally listed as peak luminous flux instead, but other times as the average during discharge, which is more representative of typical service levels.
4.2.2.4 Energy storage system information 4.2.2.6 Battery general aspects 4.2.5 Battery performance aspects 4.2.2.5 Battery easy replaceability	Package type, nominal voltage, capacity are all important for understanding if spares will be available; the replaceability determines if it is easy to service.
4.2.5 Battery performance aspects 4.2.2.4 Energy storage system information 4.2.2.6 Battery general aspects	This information is useful for ensuring the correct replacement battery can be obtained.
4.2.9.3 Average light distribution characteristics	Peak illuminance at a specified distance is often advertised in lieu of luminous flux. It is important to carefully adjust the test result to match the distance specified in the advertised value using known light propagation relationships ("inverse square law").
4.2.6 Solar module aspects	Peak power capacity and type are often listed.
4.2.2.9 Auxiliary ~~features~~ outlets, ports and adapters information 4.2.2.10 Appliances information	The presence of functional auxiliary features (e.g. a mobile phone charger or USB power source) ~~may~~ and available appliances (e.g. fan, radio or television) can be very important to some end users.
4.2.3.1 Water protection – enclosure 4.2.3.2 Water protection – circuit protection and drainage	Ensure that there is no information that misleads consumers about the level of protection afforded them by the combination of the enclosure and other water protection systems.
4.2.4.2 2 000 h lumen maintenance	Lifetime is often given for much longer durations (e.g. 20 000 h). These may be compared to the 2 000 h lifetime to ensure the claim is possible.

IECNORM.COM : Click to view the full PDF of IEC TS 62257-9-5:2016 RLV
Withdrawn

5.4.4.3 Safety and durability

5.4.4.3.1 General

Safety and durability criteria protect the user from harm and the product from early failure during typical use. It is important to balance the safety and durability requirements with cost implications and reasonable expectations of consumer care, or the safety and durability criteria risk being over-prescribed. It is helpful to consider the expected minimum product lifetime when determining durability-related criteria.

For pass/fail tests, tolerances for failure rates should be specified (see Table 9).

Table 9 – Safety and durability criteria for quality standards *(1 of 2)*

Safety or durability criterion	Aspect(s) considered in assessment	Standard specification	Notes
Level of water exposure protection (overall, technical, or enclosure-only)	~~4.2.11 Water protection integrated assessment~~ 4.2.3.1 Water protection – enclosure 4.2.3.2 Water protection – circuit protection and drainage 4.2.3.3 Water protection – overall 4.2.3.4 Water protection – solar module 4.2.11.1 Product and manufacturer information 4.2.2.7 Packaging and user's manual information	The required level of water protection (see list below) and which aspects may contribute to protection. Levels of water protection: No protection Occasional rain Frequent rain Permanent outdoor exposure Permanent exposure in context of rooftop installation ~~for~~ PV modules	The degree of protection should include consideration of product category and expected exposure. Specify the aspects that may contribute to the level of water exposure protection by choosing an overall, technical, or enclosure-only criterion.
Physical ingress protection	4.2.3.5 Physical ingress protection 4.2.3.6 Physical ingress protection – solar module	The required level of physical ingress protection in terms of the minimum IP class.	Degree of protection should include consideration of product category and expected exposure. Also, consider how connectors will be incorporated. Most external power connectors are not protected above IP2x.
Mechanical durability – drop test	4.2.3.7 Drop resistance	The required success rates in the drop test for functionality and safety (two success rates).	Failure allowance should consider Boolean nature of results and consider product category (i.e. fixed products are unlikely to be dropped compared to portable products).
Mechanical durability – goosenecks and moving parts	4.2.3.8 Gooseneck and moving part durability	The required success rates in the gooseneck and moving part durability test for functionality and safety (two success rates).	Only applies to ~~lamps~~ products with a gooseneck or moving parts.
Mechanical durability – connectors	4.2.3.9 Connector durability	The required success rates in the connector test for functionality and safety (two success rates).	Failure allowance should consider Boolean nature of results.
Mechanical durability – switches	4.2.3.10 Switch durability	The required success rates in the switch test for functionality and safety (two success rates).	Failure allowance should consider Boolean nature of results.
Mechanical durability – strain relief	4.2.3.11 Strain relief durability	The required success rates in the switch test for functionality and safety (two success rates).	Failure allowance should consider Boolean nature of results.

IECNORM.COM : Click to view the full PDF of IEC TS 62257-9-5:2016 RLV
Withdrawn

Table 9 *(2 of 2)*

Workmanship	4.2.3.12 Wiring quality	The required success rate for each aspect of the wiring quality inspection.	Failure allowance should consider the prevalence of each fault type.
~~Lumen maintenance~~	~~4.2.4.2 2 000 hour lumen maintenance~~	~~The minimum average level of lumen maintenance after 2 000 h and the required success rate on a sample-to-sample basis.~~	~~Consider the expected rate of use and desired product lifetime.~~
Battery durability	4.2.3.13 Battery protection strategy 4.2.5.3 Battery storage durability 4.2.11.1 Product and manufacturer information 4.2.11.3 Third-party marks and certifications	The guidelines for determining if batteries are well protected from early failure and if users are protected from potential harm due to battery failure.	Be careful not to over-prescribe the requirements, since there are a wide range of battery protection strategies that can provide satisfactory results – particularly for emerging chemistries.
Lumen maintenance	4.2.4.2 2 000 h lumen maintenance	The minimum average level of lumen maintenance after 2 000 h and the required success rate on a sample-to-sample basis.	Consider the expected rate of use and desired product lifetime.
Fluorescent light durability	4.2.4.3 Fluorescent light durability	The required success rate for each sample in additional tests for fluorescent light durability.	Failure allowance should consider Boolean nature of results.
AC-DC charger safety	4.2.11.1 Product and manufacturer information 4.2.11.3 Third-party marks and certifications	The guidelines for determining if AC-DC chargers have acceptable safety approval marks and certifications.	Self-certification marks are not necessarily meaningful if no market oversight exists.
Hazardous substances ban	4.2.2.4 Energy storage system information 4.2.2.6 Battery general aspects 4.2.11.1 Product and manufacturer information	The guidelines for determining allowable battery chemistries.	A hazardous substance ban could apply to product components beyond the battery, though monitoring and enforcement is difficult in most markets.
Cable specifications	4.2.11.1 Product and manufacturer information 4.2.11.3 Third-party marks and certifications	The guidelines for determining if outdoor cables have acceptable safety approval marks and certifications.	Self-certification marks are not necessarily meaningful if no market oversight exists.
Circuit and overload protection, PV overvoltage protection, and miswiring protection	4.2.7.3 Circuit and overload protection	The required success rate and number of samples required for each protection test.	Failure allowance should consider Boolean nature of results, while sample number should consider the fact that each test is destructive.

IECNORM.COM : Click to view the full PDF of IEC TS 62257-9-5:2016 RLV
Withdrawn

5.4.4.3.2 Water exposure protection considerations

The specifying organization should consider several factors when establishing water exposure protection requirements for solar lighting products. The product category (as outlined in 4.1.2) is primarily responsible for determining these requirements, as some products are more likely than others to be exposed to water based on the product design. Cost is also a consideration, as products designed to be resistant to higher levels of water exposure are often more

expensive because of the additional manufacturing costs associated with sealing the enclosure or internal circuit elements.

Table 10 describes how various levels of water protection are determined based on a combination of laboratory test results, product design and manufacturing information, and consumer information. The levels of protection are:

- No protection
- Occasional rain
- Frequent rain
- Permanent outdoor exposure
- Permanent exposure in context of rooftop installation for PV modules

The results of an assessment will include several "types" of water protection level. A quality standard will need to specify which type is applicable. The types are:

- Overall protection: water protection by all the potential sources, including user behaviour
- Technical protection: protection from all product design and manufacturing aspects
- Enclosure-only protection: protection from the enclosure only

Table 10 – Recommended level of water protection by product category

Product category	Recommended level of water protection	~~Notes~~ Remarks
Fixed separate (indoor)	No protection	Products intended for indoor use are unlikely to be exposed to water and do not require water protection.
Portable separate	Occasional rain	Portable products ~~may~~ can experience occasional water exposure in service and should have some degree of water protection.
Portable integrated	Frequent rain	Portable integrated products are likely to be exposed to water when left outside to solar charge and should have good water exposure protection.
Fixed integrated (outdoor)	Permanent outdoor exposure	Outdoor products are certain to be exposed to rain and should have a high degree of water exposure protection.
Separate PV module	Permanent rooftop installation for PV modules	Separate PV modules are certain to be exposed to rain, and any sensitive electronics should have a high degree of water exposure protection.

5.4.4.4 End user support

End user support criteria describe the information (labelling, instructions, and built-in indicators) that enables end users to maintain and fully realize the potential of a device (Table 11).

IECNORM.COM : Click to view the full PDF of IEC TS 62257-9-5:2016 RLV
Withdrawn

Table 11 – End user support criteria for quality standards

End user support criterion	Aspect(s) considered in assessment	Standard specification	~~Notes~~ Remarks
Information on product design, utilization, and care	4.2.2.7 Packaging and user's manual information	Requirements for end user information.	Define if there are requirements for consumer-facing information on packaging or in a user's manual. ~~This may be more appropriate for specific, targeted programmes than general market support or market offerings, since it is unlikely that a broad set of products will be available that meet any particular set of guidelines.~~ In some cases, a specific piece of information ~~may have~~ has implications for the required level of quality in another criterion (e.g. advising the user to protect the device from exposure to water on the packaging or in the user's manual may warrant a reduction in the requirements for water protection defined by 4.2.3.1 and 4.2.3.2).
Other	4.2.2.11 Other visual screening results	Requirements for particular aspects of the visual screening.	Define if there are requirements for other aspects of end user support (e.g. indicator lights). As with requirements for consumer-facing information, these requirements should be added with care to avoid over-prescribing.

5.4.5 Warranty requirements criteria

Warranty requirements are generally narrow in scope, focusing on the minimum duration and coverage for product warranties. In situations where there is a specific need for service in a particular location, service capabilities may be added to the warranty requirements. Table 12 lists criteria that are included in a warranty standard.

Table 12 – Criteria for warranty standards

End user support criterion	Aspect(s) considered in assessment	Standard specification	Notes
Maintenance and warranty terms	4.2.2.8 Warranty information	Minimum warranty duration and coverage.	Define the minimum warranty terms with consideration for the implications on availability of service and reasonable expectations for guaranteed lifetime.
Service capabilities	4.2.11.2 Warranty coverage	Minimum availability of service to end users in a particular location	These requirements are very specific to "local" projects typically.

~~**5.4.6 Performance targets criteria**~~

~~**5.4.6.1 General**~~

~~The following subclauses describe aspects that are appropriate for use as performance targets and gives guidance on implementing a set of targets.~~

~~There are several categories of performance criteria listed below. For each category, it is important for a set of performance targets to specify:~~

- ~~What level of performance is acceptable for each aspect~~
- ~~Whether minimum levels of performance are contingent on also meeting others (e.g., a combination of run time and brightness)~~
- ~~How many product settings shall meet the criteria [1)]~~
- ~~Which product categories are subject to each criterion if there are differences across categories~~

~~1) It is generally appropriate to set performance targets that should be met by one setting or more, but allow flexibility for the remaining settings.~~

IECNORM.COM : Click to view the full PDF of IEC TS 62257-9-5:2016 RLV

~~5.4.6.2 Combined run time and lighting service targets~~

~~5.4.6.2.1 General~~

~~Each product setting ("brightness level") may be described by a set of run times and lighting service. A set of performance targets includes a "combined" target to meet minimum run time(s) at a minimum lighting service level(s), and if at least one setting meets the combined target the product is in compliance. There may be more than one combined target.~~

~~5.4.6.2.2 Run time~~

~~Run time is a key performance indicator for lighting products; the duration of lighting service is directly related to end-user utility.~~

~~It is important to consider the range of charging options (see 4.2.2.2) available to end-users and their likely service needs when setting run time criteria. Often, an "or" requirement is appropriate that allows compliance with any one of the criteria to pass an overall run time assessment. Table 16 lists run time criteria for performance targets.~~

~~Table 16 – Run time criteria for performance targets~~

~~Run time criterion~~	~~Aspect(s) considered in assessment~~	~~Target specification~~	~~Notes~~
~~Central charged product full battery run time~~	~~4.2.7.2 Full battery run time~~ ~~4.2.7.4 Grid charge run time~~	~~The minimum full battery run time and grid run time.~~	~~Set the target high enough to meet 1 day to 2 days of lighting service requirements for the end-user who will charge via centralized means. Note that many products with solar charging can also be charged via centralized means if they have an input port.~~
~~Independently solar charged product – solar day run time~~	~~4.2.7.3 Solar day run time~~	~~The minimum solar day run time for a given solar resource.~~	~~Set the target high enough to meet typical daily needs given a standard or specific solar resource. Typically based on the standard solar day (5 kWh/m^2)~~
~~Independently electromechanically charged product – electromechanical run time characteristics~~	~~4.2.7.2 Full battery run time~~ ~~4.2.7.5 Electromechanical charge ratio~~	~~The minimum full battery run time and electromechanical run time.~~	~~Set an electromechanical charge run time that is reasonable in terms of user effort and a Full battery run time that ensures the user can use a product for sufficiently long periods of time between charging.~~

~~Table 17 lists some benchmarks for run time requirements that may be helpful for setting performance targets:~~

~~Table 17 – Run time benchmarks~~

~~Service type / context~~	~~Service level~~	~~Notes and source~~
~~2008 evening / night time illumination in off-grid Sub-Saharan Africa using fuel-based lighting~~	~~Median 3,5 h – 4 h, range of 2 h – 6 h.~~	~~From a set of market research surveys across five countries in Sub-Saharan Africa (Lighting Africa). Note this does not include early morning illumination needs, which may be an hour or more.~~
~~2007 night fishing in India~~	~~4 h – 6 h for fish sorting; 10 h for night fishing; 1,5 h for household uses.~~	~~From a small-sample survey in a fishing village (*Improved Lighting for Indian Fishing Communities*, ER291-3 Final Report May 16, 2007)~~

~~5.4.6.2.3 Lighting service~~

~~Lighting service levels determine the usefulness of a device for particular activities.~~

IECNORM.COM : Click to view the full PDF of IEC TS 62257-9-5:2016 RLV

It may be important to consider the form factor (i.e. task, ambient, etc.) of the product or the needs of a particular target set of users (in the case of a targeted project) when setting lighting service level requirements (Table 18).

Table 18 – Lighting service criteria for performance targets

Lighting service criterion	Aspect(s) considered in assessment	Target specification	Notes
General illumination service	4.2.8.1 Average luminous flux output	Minimum luminous flux.	Set the target high enough to meet general illumination needs, considering the affordability trade-offs and the size of spaces typically lit in off-grid households.
Task lighting service	4.2.8.3 Average light distribution characteristics	Minimum illuminance level and minimum area served with at least the minimum illuminance level. Specify the allowable orientations of the light (suspended from a fixed distance, suspended from an arbitrary distance, etc.).	Set the target high enough to meet the task lighting needs of a range of consumers, considering the affordability trade-offs.

Table 19 lists some benchmarks for lighting service requirements that may be helpful for setting performance targets:

Table 19 – Lighting service benchmarks

Service type / context	Service level	Notes and source
General illumination expectations in off-grid Sub-Saharan Africa	20 lm	A set of focus groups in 2010-2011 across five countries in Sub-Saharan Africa established that 20 lm is generally favourable for a variety of end-users in terms of meeting their expectations (Lighting Africa).
General illumination from typical fuel based lighting	10 lm – 30 lm	Unpressurized fuel based lighting (candles, "wick" lamps, and hurricane lamps) provide a range of lighting service from 10 lm – 30 lm.
General illumination from a 60 W incandescent light bulb (or 15 W CFL)	900 lm	This is representative of typical minimum lighting service levels in grid-connected homes and businesses.
Reading (children in off-grid village)	25 lux	This is based on a review of lighting needs in Nepali villages. (Bhusal et al 2007 doi: 10.1582/LEUKOS.2007.03.04.003).
General illumination in public buildings (industrialized country standards)	300 lux – 700 lux	From a review of lighting standards (Mills, E. and N. Borg, 1999. Trends in Recommended Illuminance Levels: An International Comparison Journal of the Illuminating Engineering Society, Winter 1999)
General detail oriented work (industrialized country standards)	1 000 lux	From a review of lighting standards (Mills and Borg 1999)

5.4.6.3 Additional functions

Additional functions may be required for particular programmes or offers if the end-users have specific needs beyond lighting service. These requirements are not normally used for general market support programmes focused on off-grid lighting that serve users with a variety of needs. Table 20 lists additional function criteria for performance targets.

Table 20 – Additional function criteria for performance targets

Additional function criterion	Aspect(s) considered in assessment	Target specification	Notes
Mobile phone	4.2.2.9 Auxiliary features information	Specify if mobile charging is required and whether there are	Mobile phone charging is a key function for many consumers, but is one that is

IECNORM.COM : Click to view the full PDF of IEC TS 62257-9-5:2016 RLV

~~charging~~		~~requirements for number and type of connectors, etc.~~	~~easily described by advertising or on packaging. Consider a truth-in-advertising quality standard in this area for market support programmes. For bulk purchase or specifically targeted programmes it may be appropriate to specify mobile phone charging functions as a performance target.~~
~~Other~~	~~4.2.2.9 Auxiliary features information~~	~~Specify if there are additional required services.~~	~~Other services sometimes offered include integrated radios, fans, and more. It is critical to be careful not to over-specify feature requirements.~~

6 Quality test method

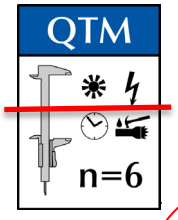

6.1 General

The quality test method (QTM) is a rigorous set of tests with a relatively large sample size that uses randomly procured samples. It is the most stringent set of tests in this part of IEC 62257 and is appropriate for:

- qualification for market support programmes, and
- generating information for third-party verified specification sheets.

6.2 Applications

QTM tests can support a broad range of quality assurance needs where rigorous, unbiased test results are required. Table 13 lists examples of how they are applied depending on the type of quality assurance framework:

Table 13 – Applications of product specifications

Type of QA framework	Example(s) of applying Clause 6
General market support	Require QTM results for qualifying for market support. Accept QTM results from any accredited laboratory. Use QTM results to produce standardized specification sheets.
Manufacturing/ distribution	Use QTM results to assess the full production/supply chain. Require QTM results for assessing potential business partners. Accept QTM results from any accredited laboratory.
Bulk procurement	Require QTM results for assessing potential suppliers. Accept QTM results from any accredited laboratory.
Trade regulation	Require QTM results for qualifying for tax exemption. Accept QTM results from any accredited laboratory.

6.3 Sampling requirements

The product samples should be selected and shipped to the test lab according to the random sampling guidelines outlined in Annex E.

IECNORM.COM : Click to view the full PDF of IEC TS 62257-9-5:2016 RLV
Withdrawn

The recommended number of samples to procure for QTM testing is 18: six each for two parallel batches plus six spares.

6.4 Laboratory requirements

The test laboratory should be properly trained to undertake the test methods described below and accredited by an international or national standards body (e.g. ILAC using ISO/~~IEC~~ 17025). The measurement equipment should be calibrated against reference instruments annually, or as directed by the equipment manufacturer or laboratory accreditation organization.

6.5 Testing requirements

Each of the aspects listed in Table 14 should be measured where they are applicable to a product. It is not necessary that each aspect be measured on each sample under test, but it is important to note in the test results which samples were the source of each result in an unambiguous way. A general description of the test method family for each aspect is listed for informative purposes only.

For products with multiple settings, at least one set of test results should fully characterize the performance on the highest light output setting. ~~At least one other set of test results should characterize a setting with lower output.~~ Additional settings may be measured at the discretion of the test laboratory to verify truth in advertising statements from the manufacturer when other light settings are advertised, or as required in the product specification.

Table 14 – QTM testing requirements *(1 of 3)*

Aspect	Reference	Applicability	Sample size	Test classes	Test method family
Product design, manufacture, and marketing aspects	**4.2.2**				
Arrangement of components	4.2.2.1	All products	1	A	Visual screening
Charging system information	4.2.2.2	All products	1	A	Visual screening
Lighting system information	4.2.2.3	All products	1	A	Visual screening
Energy storage system information	4.2.2.4	All products	1	A	Visual screening
Battery easy replaceability	4.2.2.5	All products	1	A	Visual screening
Battery general aspects	4.2.2.6	All products	1	A	Visual screening
Packaging and user's manual information	4.2.2.7	All products	1	A	Visual screening
Warranty information	4.2.2.8	All products	1	A	Visual screening
Auxiliary features information	4.2.2.9	All products	1	A	Visual screening
Appliances information	4.2.2.10	All products	1	A	Visual screening
Other visual screening results	4.2.2.11	All products	1	A	Visual screening

IECNORM.COM : Click to view the full PDF of IEC TS 62257-9-5:2016 RLV
Withdrawn

Table 14 *(2 of 3)*

Aspect	Reference	Applicability	Sample size	Test classes	Test method family
Product durability and workmanship aspects	**4.2.3**				
Water protection – enclosure and PV module	4.2.3.1 4.2.3.4	All products	~~6~~ 1	A, B	IP class assessment
Water protection – circuit protection and drainage	4.2.3.2	At the request of the testing client	~~6~~ 1	A	n/a
Water protection – overall	4.2.3.3	All products	1	A	IP class assessment
Physical ingress protection	4.2.3.5 4.2.3.6	All products	~~6~~ 1	A, B	IP class assessment
Drop resistance	4.2.3.7	~~All products~~ Portable components, excluding appliances such as radios, small TVs, DVD players, and fans that are not typically expected to meet durability standards	6	A, B	Durability
Gooseneck and moving part durability	4.2.3.8	Products with a gooseneck/moving part	6	A	Durability
Connector durability	4.2.3.9	All products	6	A	Durability
Switch durability	4.2.3.10	All products	6	A	Durability
Strain relief durability	4.2.3.11	All products	6	A	Durability
Wiring quality	4.2.3.12	All products	6	A	Visual screening
Battery protection strategy	4.2.3.13	All products	6	A	Charge controller testing and Battery storage durability
Lighting durability aspects	**4.2.4**				
2 000 h lumen maintenance	4.2.4.2	All products	6	A	Lumen maintenance
Fluorescent light durability	4.2.4.3	Products with fluorescent light	6	A	Extra tests for fluorescent lights
Battery performance aspects	**4.2.5**				
Battery capacity	4.2.5.1	All products	6	A	Battery tests
Battery ~~storage~~ round-trip energy efficiency	4.2.5.2	All products	6	A	Battery tests
Battery storage durability	4.2.5.3	All products	6	A	Battery tests
Battery nominal voltage	4.2.5.4	All products	6	A	Battery tests
Solar module aspects	**4.2.6**				
Solar I-V curve parameters	4.2.6.1	All products	6	A, B	Solar module tests
~~Solar module~~ Cable length	4.2.6.2	All products	6	A	Visual screening
~~**Run time aspects**~~	~~**4.2.7**~~				
Performance aspects	**4.2.8**				
~~Full-battery run time~~	~~4.2.7.2~~	~~All products~~	~~6~~	~~A~~	~~Run time~~
Solar-day run lighting time	4.2.8.3	Solar charged products	6	A	Run time

IECNORM.COM : Click to view the full PDF of IEC TS 62257-9-5:2016 RLV
Withdrawn

Table 14 *(3 of 3)*

Lighting full-battery run time	4.2.8.6	All products	6	A	Run time
Grid-charge run time	4.2.8.7	Grid charged products	6	A	Run time
Electromechanical charge ratio	4.2.8.7	Electromechanically-charged products	6	A	Run time
Light output aspects	**4.2.9**				
Average luminous flux output	4.2.9.1	All products	6	A	Luminous flux
Full width half maximum (FWHM) angles	4.2.9.2	All products	~~6~~ 2	A	Light distribution
Average light distribution characteristics	4.2.9.3	All products	~~6~~ 2	A	Light distribution
Colour characteristics	4.2.9.4	All products	6	A	Luminous flux
Circuit efficiency aspects					
Battery-charging circuit efficiency	4.2.10	All products	6	A	Circuit efficiency
Self-certification aspects	**4.2.11**				
Product and manufacturer information	4.2.10.1	All products	n/a	A	Self-reported
Warranty coverage	4.2.11.2	As required for programmes	n/a	A	Self-reported
Third-party marks and certifications	4.2.11.3	All products	n/a	A	Self-reported
~~**Integrated assessment**~~					
~~Water protection integrated assessment~~	~~4.2.11~~	~~As requested by the manufacturer~~	~~n/a~~	~~A~~	~~Integrated assessment~~

6.6 Recommended tests programme

6.6.1 General

The following programme, illustrated in Figure 7, is one strategy to accomplish all the tests in a timely manner.

IECNORM.COM : Click to view the full PDF of IEC TS 62257-9-5:2016 RLV
Withdrawn

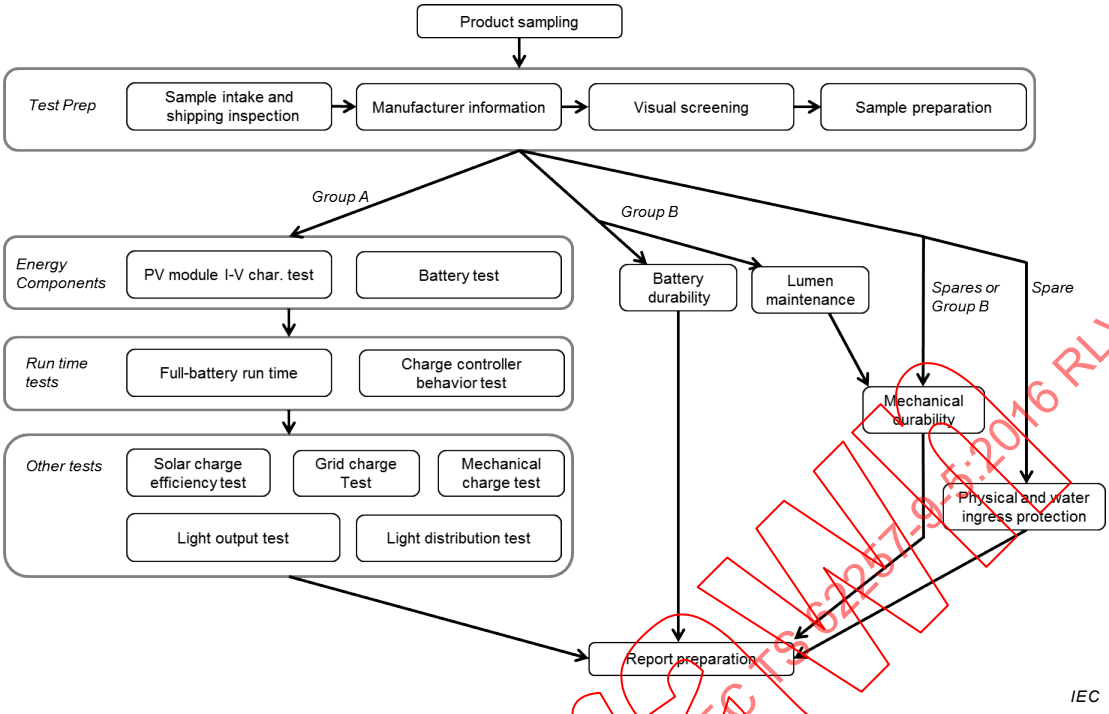

Figure 7 – Recommended sequence of testing for QTM

~~**6.6.2 Product sampling**~~

~~Samples are randomly procured in the supply chain or market and shipped to the test centre. The product sampling procedure is presented in Annex E.~~

6.6.2 Test preparation

6.6.2.1 General

The initial intake steps involve ensuring the samples are intact, preparing them for further tests, and requesting self-certification information from the manufacturer.

6.6.2.2 Test sample intake and shipping inspection

The samples should all be inspected for shipping damage, unambiguously labelled for identification during the testing process, and placed into batches.

6.6.2.3 Manufacturer self-reported information

If it has not already been done, the manufacturer (or their proxy) should be contacted to ask for self-certification information that is outlined in Annex D and to inform them the test samples were received.

6.6.2.4 Visual screening

The visual screening should be done before any other tests and before the samples are altered to prepare them for other tests. The visual screening procedure is presented in Annex F.

6.6.2.5 Sample preparation

After the visual screening, prepare the samples for further testing by partially disassembly to provide easy access to various components. Sample preparation procedures are presented in Annex G. All samples, except for spares, shall be prepared.

IECNORM.COM : Click to view the full PDF of IEC TS 62257-9-5:2016 RLV
Withdrawn

6.6.3 Batch A tests

6.6.3.1 General

Batch A undergoes the main set of tests.

6.6.3.2 Energy component tests

6.6.3.2.1 General

Energy component tests can generally be done independently of each other on an ad-hoc basis. The recommendation is to complete them before running system-level tests, or complete them opportunistically as is appropriate.

6.6.3.2.2 Battery test

The battery tests (in particular capacity measurements) should be done before any system-level run time tests to ensure the batteries are "refreshed" from any time they spent in storage before testing. The battery test procedure is presented in Annex K.

6.6.3.2.3 Photovoltaic module I-V characteristics test

Since outdoor solar PV module testing is subject to the availability of a clear "solar window", they are often the most "opportunistic" of the tests in the programme. The outdoor photovoltaic module I-V characteristics test procedure is presented in Annex Q.

For amorphous solar modules, it is important to begin sun soaking the modules immediately after they are received, since at least 30 days of outdoor exposure are needed before the tests commence.

6.6.3.3 Run time tests

6.6.3.3.1 General

The full-battery run time test should be carried out prior to the additional run time related tests. The additional run time related tests require using measured values during the test to determine the specified run time.

6.6.3.3.2 Full-battery run time

It is often convenient to do the full-battery run time test directly after the battery capacity measurements. Cycle the batteries (as is done in the battery capacity measurements) and fully charge them before this test. The full-battery run time test procedure is presented in Annex M.

6.6.3.4 Charge controller behaviour test

The deep-discharge protection charge controller measurement may be incorporated into the full-battery run time. The overcharge protection charge controller measurement requires independent testing. The charge controller behaviour test procedure is presented in Annex S.

6.6.3.5 Full discharge preparation

A full discharge shall be conducted to prepare the sample for the solar charge test. Procedures for a full discharge are presented in Annex N.

IECNORM.COM : Click to view the full PDF of IEC TS 62257-9-5:2016 RLV
Withdrawn

6.6.3.6 Other tests

6.6.3.6.1 Solar charge efficiency test

Solar charging efficiency testing shall be commenced after the sample is fully discharged according to the full discharge preparation in Annex N. The solar charge efficiency value is used to determine the solar run time. The solar charge test procedure is presented in Annex R.

6.6.3.6.2 Grid charge test

Grid charge testing shall be commenced after the sample is fully discharged according to the full discharge preparation in Annex N. The grid charge efficiency value determined by the grid charge test is used to determine the grid run time. The grid charge test procedure is presented in Annex O.

6.6.3.6.3 Electromechanical charge test

Electromechanical charge testing shall be commenced after the sample is fully discharged according to the full discharge preparation in Annex N. The electromechanical charge efficiency value determined by the electromechanical charge test is used to determine the electromechanical charging ratio. The electromechanical charge test procedure is presented in Annex P.

6.6.3.6.4 Light output test

The light output test is not strictly on components, but of a system including a driver, light source, and optical components. However, the system may be treated as a single component if it is separable from the other main components while maintaining the same electrical and thermal characteristics that are present when the product is fully assembled. The light output test procedure should be done after the full-battery run time test and is presented in Annex I.

6.6.3.6.5 Light distribution test

Like the light output test, the light distribution test is not strictly on components, but of a system including a driver, light source, and optical components. However, the system may be treated as a single component if it is separable from the other main components while maintaining the same electrical and thermal characteristics that are present when the product is fully assembled. The light distribution test procedure should be done after the full-battery run time test and is presented in Annex T.

6.6.3.7 Energy service calculations (optional)

The energy service calculations described in Annex GG are used to estimate the system-level run time at a given utility level (e.g. lumens of light, or volume of radio play). The calculations use values from the battery test (Annex K), the solar charge test (Annex R), the assessment of DC ports (Annex EE), generic appliances (Annex HH), Appliance tests (Annex FF), and full-battery run time test (Annex M). All of these tests shall be conducted prior to finalizing the energy service calculations.

6.6.4 Batch B tests

6.6.4.1 General

Batch B undergoes long-term lumen maintenance testing in parallel with Batch A testing.

6.6.4.2 Lumen maintenance test

The batch B samples shall not have undergone any other testing prior to lumen maintenance testing. This test is long-term and is carried out in parallel with those tests undergone by batch A samples. The lumen maintenance test procedure is presented in Annex J.

IECNORM.COM : Click to view the full PDF of IEC TS 62257-9-5:2016 RLV
Withdrawn

6.6.4.3 Battery durability test

While the lighting appliances of the batch B samples are connected to power supplies for the lumen maintenance test, the batteries of the batch B samples are tested for durability during storage according to the test procedure in Annex BB. This test is also long-term and is carried out in parallel with the tests undergone by batch A samples.

6.6.5 Batch C – potentially destructive tests

6.6.5.1 General

In general, it is best to save destructive testing to the end of the test programme to ensure sufficient samples are available in other tests. These tests may be performed on spare samples or batch A or B samples that have finished all other testing.

6.6.5.2 Physical and water ingress protection test

Physical and water ingress protection shall be assessed on samples that have the least amount of impact or adulteration from the testing process. Unused spares should be the preferred samples for this assessment. The physical and water ingress protection test procedure is presented in Annex U. It is also possible for product to be assessed for water protection with the level of water protection procedure, which is presented in Annex V.

6.6.5.3 Mechanical durability test

It is preferable to do durability testing (switches, connectors, gooseneck/moving part, and drop test) on the "spare" samples that have not been altered for testing. However, it is often infeasible to accomplish this if the unadulterated spares are required for other tests and in the best case there will be five unadulterated spares out of the original 18. In this case, the "least modified" samples from Batch A or Batch B should be used. The mechanical durability test procedure is presented in Annex W.

6.6.5.4 Circuit protection tests (optional)

6.6.5.4.1 Output overload protection test

This test assesses whether the DUT is protected against excessive load or short circuits applied to the appliance receptacles and is described in Annex DD. The test is not dependent on any other tests, but is required to be conducted prior to the assessment of DC ports in Annex EE. The test is potentially destructive and should be conducted on either samples that have finished testing in batches B or C, or spare samples that are not required for any other tests.

6.6.5.4.2 Miswiring protection test

This test assesses whether the DUT is protected against improper wiring. The test is not dependent on any other tests, but is potentially destructive and should be conducted on either samples that have finished testing in batches A, B or C, or spare samples that are not required for any other tests. Note there are several situations described in Annex DD in which this test need not be conducted.

6.6.5.4.3 PV overvoltage protection test

The PV overvoltage protection test assesses whether the DUT can withstand a PV overvoltage condition when the battery is disconnected. This test is conducted on only one sample and shall be conducted after performing the photovoltaic module I-V performance test (Annex Q). The test is potentially destructive and should be conducted either on samples that have finished testing in batches A, B or C, or on spare samples. Note there are several situations described in Annex DD in which this test need not be conducted.

IECNORM.COM : Click to view the full PDF of IEC TS 62257-9-5:2016 RLV
Withdrawn

6.6.6 Report preparation

After testing is complete and the results are validated, a report is generated and checked for accuracy before submission to the client.

6.7 Reporting

The report for QTM testing should support any activities that depend on the information from QTM testing. ~~Templates for test results reporting are provided in Annex X.~~

At a minimum, the report should include the following elements.

a) Informative cover page.

b) Summary page(s) ~~as described in Annex X~~.

c) Detailed test reports that include results for the aspects described in 6.5 that were measured at the primary test lab. Required results are listed at the end of each annex.

d) Detailed test reports for tests performed at other labs (e.g. ingress protection test results done at a specialty IP test lab).

e) Annexes that include supplementary images and/or other supporting information.

f) Annexes that indicate manufacturer-provided information and self-certification evidence (e.g. certificates of compliance).

7 Market check method

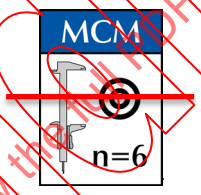

7.1 General

The market check method (MCM) is a flexible set of tests that is designed for ~~targeted retesting or checking of an aspect or set of aspects~~ market monitoring and enforcement. The MCM may comprise all the QTM tests, or a targeted subset of the QTM tests. The tests are designed for use in the following situations ~~where only partial retesting is required but with rigor equal to QTM testing, such as~~:

- when a program wants to monitor the on-going quality and performance of previously tested products;
- when there is suspicion that products on the market are substandard compared to those that were originally tested for programme qualification or the production of a standardized specification sheet;
- when a product is partially updated and an update is required for a standardized specification sheet.

MCM testing may be implemented as a two-stage process. In the first stage, which is referred to as primary check testing, the initial screening method (ISM) described in Clause 8 is used with a sample size between two to six. If results from these tests meet or exceed performance from prior QTM testing, no further action is required. However, if the results indicate possible deficiencies relative to the product specification and/or prior QTM test results, additional testing may be used to confirm the problem. This subsequent testing, which is referred to as secondary check testing, will focus only on the aspects of the product that appeared to have deficiencies according to the primary check testing results. The required sample size and allowable test classes for secondary check testing using the MCM should be the same as those required for QTM testing of the same aspect (see 6.5).

Withdrawn
IECNORM.COM : Click to view the full PDF of IEC TS 62257-9-5:2016 RLV

Alternatively, if a product is partially updated or only suspected to be substandard in particular aspects, a program may choose to forego the first stage of primary check testing and conduct targeted secondary check testing on only those aspects.

7.2 Applications

MCM tests may have a narrower focus than QTM ~~results~~ tests – they ~~are~~ may be targeted for ~~establishing~~ determining if a deviation has occurred from previous QTM results for particular aspects ~~(but not every aspect)~~. Table 15 lists examples of how MCM tests are applied depending on the type of quality assurance framework.

Table 15 – Applications of ~~product specifications~~ MCM results

Type of QA framework	Example(s) of applying MCM testing
General market support	Use MCM results for market monitoring and enforcement. Use MCM results to update standardized specification sheets. Use MCM results to renew QTM test results.
Manufacturing/distribution	Use MCM results for market monitoring.
Bulk procurement	n/a
Trade regulation	~~n/a~~ Use MCM results for market monitoring and enforcement.

7.3 Sampling requirements

The test samples should be randomly procured from retail outlets in the market according to procedures in Annex E. In select cases, it may be appropriate to accept samples ~~directly submitted by~~ randomly sampled from a manufacturer's warehouse according to procedures in Annex E ~~(e.g., if the MCM testing is to confirm the existence of an aspect that does not depend on manufacturing quality control and tolerances)~~.

Enough samples should be provided or selected so it is possible to complete the tests in a timely manner and account for unforeseen needs of additional samples.

The recommended number of samples for ~~MCM~~ primary check testing is six: two per batch plus ~~at least one~~ two spares. ~~If there are several tests to be undertaken it may be appropriate to use more than one batch.~~ The recommended number of samples for secondary check testing will depend on the aspects under test, but may be up to 18: six per batch plus adequate spares.

7.4 Laboratory requirements

The test laboratory should be properly trained to undertake the test methods described below and accredited by an international or national standards body (e.g. ILAC using ISO/~~IEC~~ 17025). The measurement equipment should be calibrated against reference instruments annually, or as directed by the equipment manufacturer or laboratory accreditation organization.

7.5 Testing requirements

Most of the specific test requirements for MCM tests will depend ~~entirely~~ on the aspects that are ~~suspected to have changed since the previous testing~~ being tested.

~~The required sample size and allowable test classes for MCM tests should be the same as those required for QTM testing of the same aspect (see 6.5).~~

The particular test plan for MCM testing is case-dependent and up to the judgement of the organization or institution who initiates the testing. The following recommendations should be kept in mind when creating MCM test plans.

IECNORM.COM : Click to view the full PDF of IEC TS 62257-9-5:2016 RLV
Withdrawn

- Always include a visual screening test to uncover any unexpected changes to the product; be ready to augment the original test plan pending the visual screening results.
- Consider system-level impacts of component changes.

~~Table 24 lists recommended aspects to test or measure in the case of three typical changes to a product: updates to the light source, battery, and PV module.~~

Withdrawn
IECNORM.COM : Click to view the full PDF of IEC TS 62257-9-5:2016 RLV

Table 24 – Typical MCM testing guidelines

Aspect	Reference	Different light source	Different battery	Different PV module
Product design, manufacture, and marketing aspects	**4.2.2**			
Arrangement of components	4.2.2.1	Yes	Yes	Yes
Charging system information	4.2.2.2	No	Yes	No
Lighting system information	4.2.2.3	Yes	No	No
Energy storage system information	4.2.2.4	No	Yes	No
Battery easy replaceability	4.2.2.5	No	Yes	No
Battery general aspects	4.2.2.6	No	Yes	No
Other visual screening results	4.2.2.10	Yes	Yes	Yes
Product durability and workmanship aspects	**4.2.3**			
Drop resistance	4.2.3.4	Yes	Yes	Yes
Strain relief durability	4.2.3.8	No	No	Yes
Wiring quality	4.2.3.9	Yes	Yes	Yes
Battery protection strategy	4.2.3.10	No	Yes	No
Lighting durability aspects	**4.2.4**			
2 000 hour lumen maintenance	4.2.4.2	Yes	No	No
Battery performance aspects	**4.2.5**			
Battery capacity	4.2.5.1	No	Yes	No
Battery voltage	4.2.5.4	No	Yes	No
Solar module aspects	**4.2.6**			
Solar I-V curve parameters	4.2.6.1	No	No	Yes
Solar module cable length	4.2.6.2	No	No	Yes
Run time aspects	**4.2.7**			
Full battery run time	4.2.7.2	Yes	Yes	No
Solar day run time	4.2.7.3	Yes	Yes	Yes
Grid charge runtime	4.2.7.4	Yes	Yes	No
Mechanical charge run time	4.2.7.5	Yes	Yes	No
Light output aspects	**4.2.8**			
Average luminous flux output	4.2.8.1	Yes	No	No
Full width half maximum (FWHM) angles	4.2.8.2	Yes	No	No
Average light distribution characteristics	4.2.8.3	Yes	No	No
Colour characteristics	4.2.8.4	Yes	No	No
Self-certification aspects	**4.2.10**			
Third-party marks and certifications	4.2.10.3	Yes	Yes	Yes

IECNORM.COM : Click to view the full PDF of IEC TS 62257-9-5:2016 RLV
Withdrawn

7.6 Recommended tests programme

See 6.6.

7.7 Report requirements

The report for MCM testing should support any activities that depend on the information from MCM testing. ~~Templates for test results reporting are provided in Annex X.~~

At a minimum, the report should include the following elements:

a) informative cover page;
b) table of contents;
c) summary page(s) ~~as described in Annex X~~.
d) detailed test reports that include results for the aspects described in 7.5;
e) annexes that include images and other supporting information;
f) annexes that indicate manufacturer-provided information and self-certification evidence (e.g. certificates of compliance).

8 Initial screening method

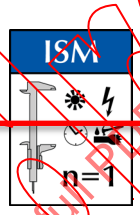

8.1 General

The initial screening method (ISM) is appropriate for preliminary testing and providing quick feedback on product design and performance in absolute terms.

8.2 Applications

ISM tests should be used for obtaining quick, preliminary results to help inform subsequent rounds of testing that confirm the preliminary results. Table 16 lists examples of how they are applied depending on the type of quality assurance framework.

Table 16 – Applications of product specifications

Type of QA framework	Example(s) of applying this Clause 8
General market support	Use ISM results to filter potential organizations/products for targeted support, followed up by QTM testing for those with promise. Use ISM results to trigger MCM testing when there is suspicion of a change in the quality or performance or products in the market.
Manufacturing/distribution	Use ISM results for batch-to-batch monitoring of production runs of shipments.
Bulk procurement	Use ISM results for batch-to-batch monitoring shipments.
Trade regulation	Use ISM results to make preliminary decisions, followed up with QTM testing to confirm results.

8.3 Sampling requirements

The test samples may be provided directly by a manufacturer (or their proxy) or may be randomly procured from the market according to procedures in Annex E.

IECNORM.COM : Click to view the full PDF of IEC TS 62257-9-5:2016 RLV
Withdrawn

Enough samples should be provided or selected so it is possible to complete the tests in a timely manner and account for unforeseen needs of additional samples.

The recommended number of samples for ISM testing is three: one each for two parallel batches and one spare.

8.4 Laboratory requirements

The test laboratory should be properly trained to undertake the test methods described below. The measurement equipment should be calibrated against reference instruments annually, or as directed by the equipment manufacturer.

8.5 Testing requirements

Each of the aspects listed in Table 17 should be measured where they are applicable to a product. It is not necessary that each aspect be measured on each sample under test, but it is important to note in the test results which samples were the source of each result in an unambiguous way. A general description of the test method family for each aspect is listed for informative purposes only.

For products with multiple settings, at least one set of test results should fully characterize the performance on the highest light output setting. ~~At least one other set of test results should characterize a setting with lower output.~~ Additional settings may be measured at the discretion of the test laboratory to verify truth in advertising statements from the manufacturer when other light settings are advertised, or as required in the product specification.

IECNORM.COM : Click to view the full PDF of IEC TS 62257-9-5:2016 RLV

Table 17 – ISM testing requirements *(1 of 2)*

Aspect	Reference	Applicability	Sample size	Test classes allowed	Test method family
Product design, manufacture, and marketing aspects	**4.2.2**				
Arrangement of components	4.2.2.1	All products	1	A	Visual screening
Charging system information	4.2.2.2	All products	1	A	Visual screening
Lighting system information	4.2.2.3	All products	1	A	Visual screening
Energy storage system information	4.2.2.4	All products	1	A	Visual screening
Battery easy replaceability	4.2.2.5	All products	1	A	Visual screening
Battery general aspects	4.2.2.6	All products	1	A	Visual screening
Packaging and user's manual information	4.2.2.7	All products	1	A	Visual screening
Warranty information	4.2.2.8	All products	1	A	Visual screening
Auxiliary features information	4.2.2.9	All products	1	A	Visual screening
Appliances information	4.2.2.10	All products	1	A	Visual screening
Other visual screening results	4.2.2.11	All products	1	A	Visual screening
Product durability and workmanship aspects	**4.2.3**				
Water protection – enclosure and PV module	4.2.3.1 4.2.3.4	All products	1	A, B	IP class assessment
Water protection – circuit protection and drainage	4.2.3.2	At the request of the testing client	0	A	n/a
Water protection – overall	4.2.3.3	All products	1	A	IP class assessment
Physical ingress protection – enclosure and PV module	4.2.3.5 4.2.3.6	All products	1	A,B	IP class assessment
Drop resistance	4.2.3.7	All products	1	A, B	Durability
Gooseneck and moving part durability	4.2.3.8	Products with a gooseneck/moving part	1	A	Durability
Connector durability	4.2.3.9	All products	1	A	Durability
Switch durability	4.2.3.10	All products	1	A	Durability
Strain relief durability	4.2.3.11	All products	1	A	Durability
Wiring quality	4.2.3.12	All products	1	A	Visual screening
Battery protection strategy	4.2.3.13	All products	1	A	Charge controller testing

IECNORM.COM : Click to view the full PDF of IEC TS 62257-9-5:2016 RLV

Table 17 *(2 of 2)*

Aspect	Reference	Applicability	Sample size	Test classes allowed	Test method family
Lighting durability aspects	**4.2.4**				
500 hour lumen maintenance	4.2.4.1	All products	1	A	Lumen maintenance
Battery performance aspects	**4.2.5**				
Battery capacity	4.2.5.1	All products	1	A	Battery tests
Battery round-trip energy efficiency	4.2.5.2	All products	1	A	Battery tests
Battery storage ~~durability~~ efficiency	4.2.5.3	All products	1	A	Battery tests
Battery voltage	4.2.5.4	All products	1	A	Battery tests
Solar module aspects	**4.2.6**				
Solar I-V curve parameters	4.2.6.1	All products	1	A, B	Solar module tests
Solar module cable length	4.2.6.2	All products	1	A	Visual screening
~~**Run time aspects**~~	~~**4.2.7**~~				
Performance aspects	**4.2.8**				
~~Full battery run time~~	~~4.2.7.2~~	~~All products~~	~~1~~	~~A~~	~~Run time~~
Solar-day lighting run time	4.2.8.3	~~Solar charged products~~ All products	1	A	Run time
Lighting full-battery run time	4.2.8.5	All products	1	A	Run time
Grid-charge run time	4.2.8.6	Grid charged products	1	A	Run time
Electromechanical charge ratio	4.2.8.7	Electromechanically charged products	1	A	Run time
Light output aspects	**4.2.9**				
Average luminous flux output	4.2.9.1	All products	1	A~~,B~~	Luminous flux
Full width half maximum (FWHM) angles	4.2.9.2	All products	1	A	Light distribution
Average light distribution characteristics	4.2.9.3	All products	1	A	Light distribution
Colour characteristics	4.2.9.4	Optional	1	A,B	Luminous flux
Circuit efficiency aspects					
Battery-charging circuit efficiency	4.2.10	Optional	1	A	Circuit efficiency
Self-certification aspects	**4.2.11**				
Product and manufacturer information	4.2.11.1	All products	1	A	Self-reported
Warranty coverage	4.2.11.2	All products	1	A	Self-reported
Third-party marks and certifications	4.2.11.3	Optional	1	A	Self-reported
~~**Integrated assessment**~~					
~~Water protection integrated assessment~~	~~4.2.11~~	~~As requested by the manufacturer~~	~~n/a~~	~~A~~	~~Integrated assessment~~

IECNORM.COM : Click to view the full PDF of IEC TS 62257-9-5:2016 RLV

8.6 Recommended tests programme

See 6.6.

8.7 Reporting

The report for ISM testing should support any activities that depend on the information from ISM testing. ~~Templates for test results reporting are provided in Annex X.~~

At a minimum, the report should include the following elements:

a) informative cover page;
b) table of contents;
c) summary page(s) ~~as described in Annex X~~.
d) detailed test reports that include results for the aspects described in 8.5;
e) annexes that include images and other supporting information;
f) annexes that indicate manufacturer-provided information and self-certification evidence (e.g. certificates of compliance).

~~9 Field screening method~~

~~9.1 General~~

~~The Field Screening Method (FSM) is a set of tests that provides basic indications of product quality and performance and can generally be completed in the field without laboratory facilities or equipment. Accordingly, the results are not "absolute" but provide general indications. In the case where multiple products are tested simultaneously using the FSM, a relative comparison of quality and performance is possible.~~

~~9.2 Applications~~

~~FSM tests should be used for obtaining comparative, general results when laboratory testing is not possible. Table 27 lists examples of how they are applied depending on the type of quality assurance framework:~~

~~**Table 27 – Applications of product specifications**~~

~~Type of QA framework~~	~~Example(s) of applying this clause~~
~~General market support~~	~~N/A~~
~~Manufacturing / distribution~~	~~Use FSM results for batch-to-batch monitoring of production runs or shipments if there is no budget or facilities available for ISM tests.~~
~~Bulk procurement~~	~~Use FSM results for batch-to-batch monitoring of production runs or shipments if there is no budget or facilities available for ISM tests.~~
~~Trade regulation~~	~~N/A~~

~~9.3 Sampling requirements~~

~~The test samples may be provided directly by a manufacturer (or their proxy) or may be randomly procured from the market according to procedures in Annex E.~~

IECNORM.COM : Click to view the full PDF of IEC TS 62257-9-5:2016 RLV
Withdrawn

Enough samples should be provided or selected so it is possible to complete the tests in a timely manner and account for unforeseen needs of additional samples. At least three samples are recommended for FSM testing.

The recommended number of samples for FSM testing is three: one each for two parallel batches and one spare.

9.4 Laboratory requirements

The tests will be performed in the field or otherwise in a location without official status as a laboratory.

9.5 Testing requirements

Each of the aspects listed in Table 28 should be measured where they are applicable to a product. It is not necessary that each aspect be measured on each sample under test, but it is important to note in the test results which samples were the source of each result in an unambiguous way. A general description of the test method family for each aspect is listed for informative purposes only.

For products with multiple settings, at least one set of test results should fully characterize the performance on the highest light output setting. At least one other set of test results should characterize a setting with lower output. Additional settings may be measured at the discretion of the test laboratory.

Table 28 – FSM testing requirements *(1 of 2)*

Aspect	Reference	Applicability	Sample size	Test classes allowed	Test method family
Product design, manufacture, and marketing aspects	**4.2.2**				
Arrangement of components	4.2.2.1	All products	1	A	Visual screening
Charging system information	4.2.2.2	All products	1	A	Visual screening
Lighting system information	4.2.2.3	All products	1	A	Visual screening
Energy storage system information	4.2.2.4	All products	1	A	Visual screening
Battery easy replaceability	4.2.2.5	All products	1	A	Visual screening
Battery general aspects	4.2.2.6	All products	1	A	Visual screening
Packaging and user's manual information	4.2.2.7	All products	1	A	Visual screening
Warranty information	4.2.2.8	All products	1	A	Visual screening
Auxiliary features information	4.2.2.9	All products	1	A	Visual screening
Other visual screening results	4.2.2.10	All products	1	A	Visual screening
Product durability and workmanship aspects	**4.2.3**				
Water protection – enclosure	4.2.3.1	All products	1	B	IP class assessment
Physical ingress protection	4.2.3.3	All products	1	B	IP class assessment
Drop resistance	4.2.3.4	All products	1	B	Durability

IECNORM.COM : Click to view the full PDF of IEC TS 62257-9-5:2016 RLV
Withdrawn

Gooseneck durability	4.2.3.5	Products with a gooseneck	1	A	Durability
Connector durability	4.2.3.6	All products	1	A	Durability
Switch durability	4.2.3.7	All products	1	A	Durability
Strain relief durability	4.2.3.8	All products	1	A	Durability
Wiring quality	4.2.3.9	All products	1	A	Visual screening
Solar module aspects	**4.2.6**				
Solar module cable length	4.2.6.2	All products	1	A	Visual screening

Table 28 *(2 of 2)*

Aspect	Reference	Applicability	Sample size	Test classes allowed	Test method family
Run time aspects	**4.2.7**				
Full battery run time	4.2.7.2	All products	1	C	Run time
Solar-day run time	4.2.7.3	Solar charged products	1		Run time
Light output aspects	**4.2.8**				
Average luminous flux output	4.2.8.1	All products	1	C	Luminous flux
Average light distribution characteristics	4.2.8.3	All products	1	C	Light distribution
Self-certification aspects	**4.2.10**				
Product and manufacturer information	4.2.10.1	All products	1	A	Self-reported
Warranty coverage	4.2.10.2	All products	1	A	Self-reported
Third-party marks and certifications	4.2.10.3	Optional	1	A	Self-reported

9.6 Recommended tests programme

9.6.1 General

The following programme is one strategy to accomplish all the tests in a timely manner. Figure 7 illustrates the recommended flow for the programme of tests.

IECNORM.COM : Click to view the full PDF of IEC TS 62257-9-5:2016 RLV
Withdrawn

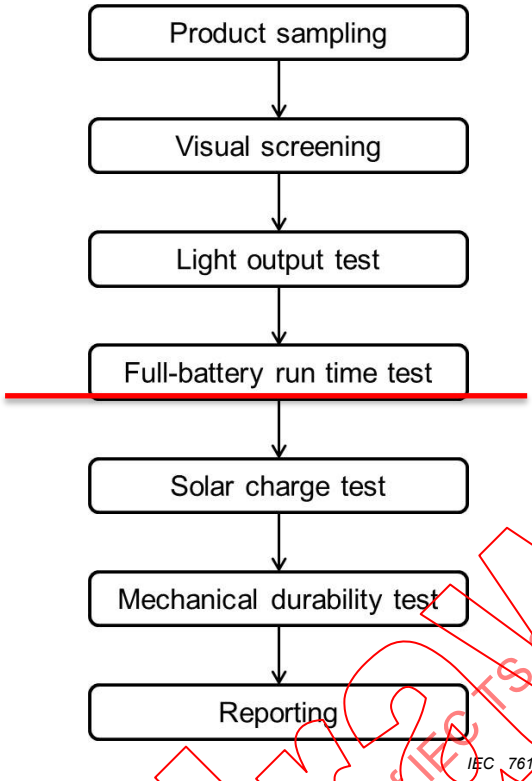

~~**Figure 7 – Recommended sequence of testing for FSM**~~

~~**9.6.2 Product sampling**~~

~~Samples are randomly procured in the market (Annex E) or provided by the manufacturer.~~

~~**9.6.3 Test sample preparation**~~

~~The samples should all be inspected for shipping damage, unambiguously labelled for identification during the testing process, and placed into batches.~~

~~**9.6.4 Manufacturer information request**~~

~~If it has not already been done, the manufacturer (or their proxy) should be contacted to ask for self-certification information that is outlined in Annex D and to inform them the test samples were received.~~

~~**9.6.5 Visual screening**~~

~~The visual screening (Annex F) should be done before any other tests and before the samples are altered to prepare them for other tests. It will be necessary to cycle the products (charge-discharge) several times to ensure functionality so a complete visual screening may be completed.~~

~~**9.6.6 Light output**~~

~~The light output tests are not strictly on components, but of a system including a driver, light source, and optical components.~~

~~**9.6.7 Full-battery run time**~~

~~The battery shall be fully charged prior to conducting the full-battery run time test (Annex AA).~~

IECNORM.COM : Click to view the full PDF of IEC TS 62257-9-5:2016 RLV
Withdrawn

~~**9.6.8 Solar-day run time**~~

~~The battery is charged using the DUT's solar module and discharged to determine the solar-day run time (Annex AA).~~

~~**9.6.9 Water protection assessment**~~

~~Water protection assessments (Annex V) shall be done on samples that have the least amount of impact or adulteration from the testing process. Generally, unused spares should be used for this assessment.~~

~~**9.6.10 Durability testing**~~

~~It is preferable to do durability testing (switches, connectors, gooseneck, strain relief, and drop test) on the "spare" samples that have not been altered or opened for testing. Use the methods provided in Annex W.~~

~~**9.6.11 Results check and report generation**~~

~~After testing is complete, a report is generated and checked for accuracy before submission to the client. Sample test report templates are located in Annex X.~~

9 Accelerated verification method

9.1 General

The accelerated verification method (AVM) is an optional pathway to enable expedited entry to markets or market support programmes. The AVM includes a 2-step process of verification entry testing and follow-up QTM testing. Results from verification entry testing may qualify a product for market support until the results are verified through a more thorough follow-up QTM test. It is recommended that this pathway only be offered to manufacturers who meet specified eligibility criteria. These three elements of the AVM are described below:

- Eligibility based on a manufacturer's experience and historical performance with the off-grid lighting market support programme. Recommended eligibility criteria should consider the number of products that a manufacturer has successfully tested with the programme, any recent instances in which the manufacturer has submitted products for testing that did not meet the quality standards, as well as the manufacturer's conduct in the market and communication with the market support programme.
- Expedited verification entry testing equivalent to an ISM test with a sample size of two. When arranging for AVM verification entry testing, a mechanism should be included to cover the cost of follow-up testing and associated administrative costs.
- Follow-up QTM testing conducted shortly after verification entry test is finished and the product is commercially available in markets. Poor performance in follow-up tests may be accompanied by penalties enacted by the market support programme to incentivize compliance. Recommended penalties include loss of programme support, loss of eligibility to use the AVM pathway and monetary penalties.

9.2 Applications

The AVM pathway is only recommended for manufacturers who meet specified eligibility criteria and for products that are reasonably expected to meet the rigors of the QTM test. The AVM enables these select products to undergo initial, expedited testing with samples that are representative of the products the manufacturer plans to distribute, but are not necessarily from a full production run. Table 18 lists examples of how AVM tests are applied depending on the type of quality assurance framework:

IECNORM.COM : Click to view the full PDF of IEC TS 62257-9-5:2016 RLV
Withdrawn

Table 18 – Applications of AVM results

Type of QA framework	Example(s) of applying AVM testing
General market support	Require AVM verification entry test results for qualifying for temporary market support. Use follow-up QTM results to continue market support. Accept AVM results from any accredited laboratory. Use AVM verification entry test results to produce standardized specification sheets. Update these standardized specification sheets with results from the follow-up QTM test.
Manufacturing/distribution	Use AVM verification entry test and follow-up QTM results to assess the full production/supply chain. Require AVM verification entry test and follow-up QTM for assessing potential business partners. Accept AVM results from any accredited laboratory.
Bulk procurement	Require AVM verification entry test and follow-up QTM for assessing potential suppliers. Accept AVM results from any accredited laboratory.
Trade regulation	Require AVM verification entry test and follow-up QTM results for qualifying for tax exemption. Accept AVM results from any accredited laboratory.

9.3 Sampling requirements

9.3.1 General

Testing for the AVM is segmented into two parts: verification entry testing and follow-up QTM testing.

9.3.2 Verification entry testing

The test samples for verification entry testing may be provided directly by a manufacturer (or their proxy) or may be randomly procured from the market according to procedures in Annex E.

The manufacturer shall provide a declaration to accompany the products which states: "A) the samples provided for testing are an accurate representation of the final production model that they plan to distribute, and B) the product is expected to meet the quality standards of the off-grid lighting market support programme." Manufacturers shall also submit documentation to assist with follow-up QTM testing and market check testing, including, but not limited to:

- an annual report listing the main markets in which their quality-verified products are being sold, differentiated by product model name,
- the names and contact details of the principal distributors to whom they sell their products,
- annual shipment figures (for the previous year) of quality-verified products, and
- the intended markets and distributors that will be used for the product under test.

Enough samples should be provided or selected so it is possible to complete the tests in a timely manner and account for unforeseen needs of additional samples. The recommended number of samples for the two-sample ISM testing is seven: two each for two parallel batches and three spares.

9.3.3 Follow-up QTM testing

The test samples for follow-up QTM testing should either be randomly procured from retail outlets in the market or randomly sampled from a manufacturer's warehouse according to procedures in Annex E.

Enough samples should be provided or selected so it is possible to complete the tests in a timely manner and account for unforeseen needs of additional samples. The recommended number of samples to procure for follow-up QTM testing is 18: six each for two parallel batches plus six spares.

IECNORM.COM : Click to view the full PDF of IEC TS 62257-9-5:2016 RLV
Withdrawn

9.4 Laboratory requirements

The test laboratory should be properly trained to undertake the test methods described below and accredited by an international or national standards body (e.g. ILAC using ISO 17025). The measurement equipment should be calibrated against reference instruments annually, or as directed by the equipment manufacturer or laboratory accreditation organization.

9.5 Testing requirements

9.5.1 General

Testing requirements for the AVM are segmented into two parts: verification entry testing and follow-up QTM testing.

9.5.2 Verification entry testing

Each of the aspects listed in Table 19 should be measured where they are applicable to a product. The list of tests is equivalent to that of the ISM, but all tests, aside from some select visual screening and IP assessments, are conducted with a sample size of two.

It is not necessary that each aspect be measured on each sample under test, but it is important to note in the test results which samples were the source of each result in an unambiguous way. A general description of the test method family for each aspect is listed for informative purposes only.

For products with multiple settings, at least one set of test results should fully characterize the performance on the highest light output setting. Additional settings may be measured at the discretion of the test laboratory to verify truth in advertising statements from the manufacturer when other light settings are advertised, or as required in the product specification.

Withdrawn
IECNORM.COM : Click to view the full PDF of IEC TS 62257-9-5:2016 RLV

Table 19 – AVM verification entry testing requirements *(1 of 2)*

Aspect	Reference	Applicability	Sample size	Test classes allowed	Test method family
Product design, manufacture, and marketing aspects	**4.2.2**				
Arrangement of components	4.2.2.1	All products	1	A	Visual screening
Charging system information	4.2.2.2	All products	1	A	Visual screening
Lighting system information	4.2.2.3	All products	1	A	Visual screening
Energy storage system information	4.2.2.4	All products	1	A	Visual screening
Battery easy replaceability	4.2.2.5	All products	1	A	Visual screening
Battery general aspects	4.2.2.6	All products	1	A	Visual screening
Packaging and user's manual information	4.2.2.7	All products	1	A	Visual screening
Warranty information	4.2.2.8	All products	1	A	Visual screening
Auxiliary features information	4.2.2.9	All products	1	A	Visual screening
Appliances information	4.2.2.10	All products	1	A	Visual screening
Other visual screening results	4.2.2.11	All products	1	A	Visual screening
Product durability and workmanship aspects	**4.2.3**				
Water protection – enclosure and PV module	4.2.3.1 4.2.3.4	All products	1	A, B	IP class assessment
Water protection – circuit protection and drainage	4.2.3.2	At the request of the testing client	1	A	n/a
Water protection – overall	4.2.3.3	All products	1	A	IP class assessment
Physical ingress protection – enclosure and PV module	4.2.3.5 4.2.3.6	All products	1	A, B	IP class assessment
Drop resistance	4.2.3.7	All products	2	A, B	Durability
Gooseneck and moving part durability	4.2.3.8	Products with a gooseneck/moving part	2	A	Durability
Connector durability	4.2.3.9	All products	2	A	Durability
Switch durability	4.2.3.10	All products	2	A	Durability
Strain relief durability	4.2.3.11	All products	2	A	Durability
Wiring quality	4.2.3.12	All products	2	A	Visual screening
Battery protection strategy	4.2.3.13	All products	2	A	Charge controller testing
Lighting durability aspects	**4.2.4**				
500 h lumen maintenance	4.2.4.1	All products	2	A	Lumen maintenance

IECNORM.COM : Click to view the full PDF of IEC TS 62257-9-5:2016 RLV
Withdrawn

Table 19 *(2 of 2)*

Aspect	Reference	Applicability	Sample size	Test classes allowed	Test method family
Battery performance aspects	**4.2.5**				
Battery capacity	4.2.5.1	All products	2	A	Battery tests
Battery round-trip energy efficiency	4.2.5.2	All products	2	A	Battery tests
Battery storage durability	4.2.5.3	All products	2	A	Battery tests
Battery voltage	4.2.5.4	All products	2	A	Battery tests
Solar module aspects	**4.2.6**				
Solar I-V curve parameters	4.2.6.1	All products	2	A, B	Solar module tests
Solar module cable length	4.2.6.2	All products	2	A	Visual screening
Performance aspects	**4.2.8**				
Solar-day lighting run time	4.2.8.3	All products	2	A	Run time
Lighting full-battery run time	4.2.8.5	All products	2	A	Run time
Grid-charge run time	4.2.8.6	Grid charged products	2	A	Run time
Electromechanical charge ratio	4.2.8.7	Electromechanically charged products	2	A	Run time
Light output aspects	**4.2.9**				
Average luminous flux output	4.2.9.1	All products	2	A	Luminous flux
Full width half maximum (FWHM) angles	4.2.9.2	All products	2	A	Light distribution
Average light distribution characteristics	4.2.9.3	All products	2	A	Light distribution
Colour characteristics	4.2.9.4	Optional	2	A, B	Luminous flux
Circuit efficiency aspects					
Battery-charging circuit efficiency	4.2.10	Optional	2	A	Circuit efficiency
Self-certification aspects	**4.2.11**				
Product and manufacturer information	4.2.11.1	All products	2	A	Self-reported
Warranty coverage	4.2.11.2	All products	2	A	Self-reported
Third-party marks and certifications	4.2.11.3	Optional	2	A	Self-reported

9.5.3 Follow-up QTM testing

See 6.5. Each of the aspects listed in Table 14 should be measured where they are applicable to a product. It is not necessary that each aspect be measured on each sample under test, but it is important to note in the test results which samples were the source of each result in an unambiguous way. A general description of the test method family for each aspect is listed for informative purposes only.

For products with multiple settings, at least one set of test results should fully characterize the performance on the highest light output setting. Additional settings may be measured at the discretion of the test laboratory to verify truth in advertising statements from the manufacturer when other light settings are advertised, or as required in the product specification.

IECNORM.COM : Click to view the full PDF of IEC TS 62257-9-5:2016 RLV
Withdrawn

9.6 Recommended tests programme

See 6.6.

9.7 Report requirements

The report for AVM testing should support any activities that depend on the information from AVM testing.

At a minimum, the report(s) should include the following elements:

a) informative cover page;
b) table of contents;
c) summary page(s);
d) detailed test reports that include results for the aspects described in 9.5;
e) annexes that include images and other supporting information;
f) annexes that indicate manufacturer-provided information and self-certification evidence (e.g. certificates of compliance).

10 Standardized specification sheets

10.1 General

Standardized specification sheets (SSS) are a way to communicate quality assurance information to the market. They include key information for potential buyers of off-grid lighting products. The information in SSS is based on standardized test results from QTM testing.

10.2 Applications

10.2.1 General

SSS requirements are useful to understand for the broad market, since they are typically the primary way to communicate and share QTM test results. Table 20 lists examples of how they are applied depending on the type of quality assurance framework:

Table 20 – Applications of product specifications

Type of QA framework	Example(s) of applying this Clause 10
General market support	Administer a SSS third-party verification programme.
Manufacturing/ distribution	Use SSS to advertise products.
Bulk procurement	Use SSS from third-party verified sources to screen potential products for purchase.
Trade regulation	Use SSS from third-party verified sources to screen applicants for import/tax programmes.

IECNORM.COM : Click to view the full PDF of IEC TS 62257-9-5:2016 RLV
Withdrawn

10.2.2 Guidance

A SSS guidelines document should provide a framework for providing clear information to buyers to enable fair comparisons to be made between different products. In general, the following are best practices for designing an SSS programme.

- Focus on specifications for system level performance (as opposed to component performance) wherever possible.
- Keep the required element list as short as possible for simplicity and clarity while still providing key information to the target buyers for the SSS programme.
- Reach out to the people who use SSS to make decisions and ask their opinion on them.
- Use graphics to convey key points.

10.2.3 Framework for SSS guidelines document

10.2.3.1 General

The key elements of a guidelines document for an SSS programme are:

- qualification requirements, that is, the quality standards ~~and/or performance targets~~ that shall be met to use the SSS;
- test result requirements, including the type of testing required and requirements for updating the results in the SSS;
- style and format requirements to ensure easy comparison of information across SSS;
- reporting precision that guides the level of rounding that is allowed from measured test results;
- results verification mechanisms to reduce the incidence of counterfeit SSS;
- required elements that shall be in every SSS;
- optional elements that may be included at the discretion of the manufacturer or their proxy;
- an example of the style, format, and contents in a fully implemented SSS.

An example framework document is included in Annex C.

10.2.3.2 Qualification standards ~~and targets~~

This defines if there are qualification criteria for participating in the SSS programme and generally references a product specification (see Clause 5).

10.2.3.3 Test result requirements

10.2.3.3.1 General

Details on the test result requirements for information presented in the SSS. The details should be specific about the requirements both when SSS are originally made and when they are updated.

10.2.3.3.2 Original testing

Typically, QTM test results are used as the basis for the original SSS of a particular product. In some cases the results may come from other sources. It is important to specify how long results are valid before retesting is required.

10.2.3.3.3 Retesting and updates

This section of the document describes the test requirements for several situations:

- full retesting after the original results have expired;

IECNORM.COM : Click to view the full PDF of IEC TS 62257-9-5:2016 RLV
Withdrawn

- partial retesting when the product is updated and the tolerance for changes in the specification that triggers retesting;
- partial retesting when a market check indicates there are discrepancies between the SSS and products available in the market.

10.2.3.4 Style and format

The style and format of SSS is generally uniform across all the SSS in a particular programme to make them useful for buyers or other stakeholders who rely on them as an information resource.

Style and formatting guidelines should generally specify the following:

- character font and size;
- use of colour;
- general guidelines for language and style.

The style and format guidelines are typically supplemented by an example SSS.

10.2.3.5 Reporting precision

Reporting precision guidelines describe the process to round quantitative test results so the information in each element of the SSS reflects the degree of significance for test results and is easy to read. For example, an average measurement of 52,3 lm across several samples might be rounded to 50 lm for placement on the SSS.

The guidelines should define three rounding rules for each SSS element that is covered.

a) Maximum precision of reporting: the highest number of significant figures allowed in the display on the SSS.

b) Minimum precision of reporting: the fewest number of significant figures allowed in the display on the SSS.

c) Maximum adjustment before additional rounding: if an element is going to be displayed with fewer significant figures than specified in 10.2.3.5 b), the maximum percentage a measured value may be adjusted up or down before additional rounding. Typically, this is a very low number (e.g. 5 %).

d) Allowable direction for additional rounding: if an element is going to be displayed with fewer significant figures than specified in 10.2.3.5 b), this specifies the allowable direction for additional rounding. Often this is the direction towards "worse" performance or quality.

Table 21 lists several elements that might be included in a SSS and provides recommended rounding rules for each. A similar table should be included in SSS guidelines documents.

IECNORM.COM : Click to view the full PDF of IEC TS 62257-9-5:2016 RLV
Withdrawn

Table 21 – Recommended precision requirements for metrics on a continuous scale

Metric	Maximum precision of reporting	Minimum precision of reporting	Maximum adjustment before rounding	Allowable direction for additional rounding	Example(s)
Run time	2 s.f.	1 s.f.	5 %	Down	4,33 h → 4,3 h or 4 h 36,6 h → 37 h or 30 h
Light output (lm)	2 s.f.	1 s.f.	5 %	Down	19,2 lm → 19 lm or 20 lm
Colour rendering (CRI) (R_a)	2 s.f.	2 s.f.	n/a	n/a	83,2 → 83
Colour temperature (CCT) (K)	2 s.f.	2 s.f.	n/a	n/a	4 678 K → 4 700 K
Light distribution (FWHM)	2 s.f.	2 s.f.	n/a	n/a	87° → 87° 178° → 180°
Battery capacity (mAh)	2 s.f.	2 s.f.	n/a	n/a	1 432 mAh → 1 400 mAh or 1 000 mAh
Other information	2 s.f.	1 s.f.	5 %	Varies	n/a
Key s.f. significant figures					

10.2.3.6 Results verification

Describe any features of the SSS that will facilitate verification of the contents. This may be via an online check, holograms, or any other security feature.

10.2.3.7 Section descriptions

Each section in the SSS should include a heading name and list the required and optional elements in the section. Each element should include a description of which aspects from the test results are referred to and a note on how to format the information. If graphics are used, a general format should be defined.

10.2.3.8 Example sheet

An illustrative example standardized specification sheet is provided below (Figure 8 and Figure 9).

IECNORM.COM : Click to view the full PDF of IEC TS 62257-9-5:2016 RLV
Withdrawn

Sunshine Lamp

Lamp Manufacturer, Inc.

Verify online: www.example.org/specs/sunshine-lamp

Valid until: July, 2014

240 lumen-hours per day of solar charging.

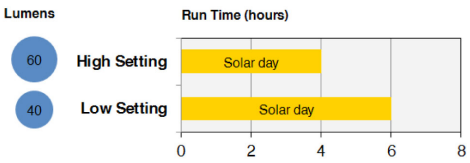

Features:

- Mobile Charging
- Meets Quality Standard
- Meets Performance Targets

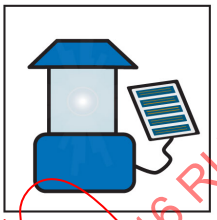

Product Details	
Manufacturer Name	Lamp Manufacturer, Inc.
Product Name	Sunshine lamp
Product Model / ID Number	sl-001 series 2009-
Contact information	sunny-info@sunshine.com
Website	www.sunshine.com/sunshine-lamp
Warranty	All parts are protected from manufacturing defect or failure under normal use for a period of one year. The solar module is protected from defects and failure under normal use for two years.

Performance Details		
	Brightness Setting**	
Performance Measure	**High**	**Low**
Full battery run time* (hours)	8	12
Run time per day of solar charging* (hours)	4	6
Total light output (lumens)	60	40
Total area with bright illumination > 25 lux (m^2)	0.4	0.25
Total lighting service (lumen-hours / solar-day)	240	240

*Run time estimates do not account for mobile phone charging or other auxiliary loads; the run time is defined as the time until the output is 70% of the initial, stabilized output.
**Additional brightness settings (not tested): Medium, Bed-light

Lighting Details	
Lamp type	LED (single light point)
Colour characteristics	CRI 85 CCT “Cool” (5000-7000 K)
Distribution type	Omnidirectional
Lumen Maintenance	95% of original output remains after 2,000 hours run time.

Special Features	
Mobile charging	Includes 5 mobile phone adapter “tips”
Housing materials	ABS body

IECNORM.COM : Click to view the full PDF of IEC TS 62257-9-5:2016 RLV

Sunshine Lamp

Sunshine Solar

Results based on test procedures detailed in IEC 62257-9-5, ed. 3.0

Verify Online: www.lightingglobal.org/specs/sunshine-lamp

Valid Until: July 2014

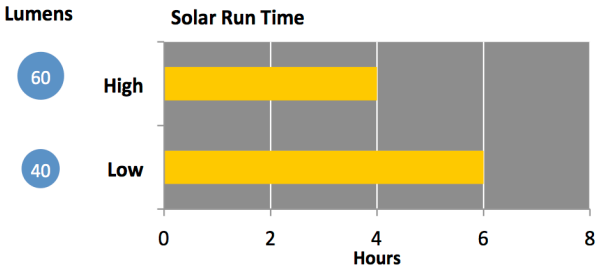

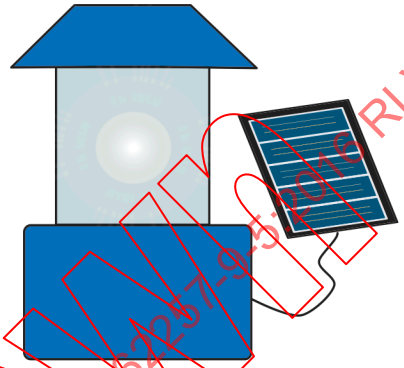

Meets Lighting Global Minimum Quality Standards

Mobile Charging

1 **Light Point**

Warranty Information

All parts are protected from manufacturing defects or failure under normal use for a period of one year. The solar module is protected from defects and failure under normal use for two years.

Performance Details

	Brightness Setting***	
Performance Measure	**High**	**Low**
Full battery run time* (hours)	8	12
Run time per day of solar charging* (hours)	4	6
Total light output (lumens)	60	40
Total area with illumination > 25 lux** (m^2)	0,40	0,25
Total lighting service (lumen-hours / solar-day)	240	240

* Run time estimates do not account for mobile phone charging or other auxiliary loads; the run time is defined as the time until the output is 70 % of the initial, stabilized output.

** Total area with illumination > 25 lux is determined by the maximum area with adequate illumination at a 0,75 m distance and at the distance from which the product would normally provide task lighting service.

*** Additional brightness settings (not tested): Medium, Bed-light

Lighting Details

Lamp type	LED
Description of light points	Single column containing 15 LEDs
Colour characteristics	CRI 85 CCT "Cool" (5 000 K to 7 000 K)
Distribution type	Omnidirectional
Lumen maintenance	95 % of the original output remains after 2 000 h run time

IEC

Figure 8 – First portion of example SSS

IECNORM.COM : Click to view the full PDF of IEC TS 62257-9-5:2016 RLV
Withdrawn

Durability	
Overall durability and workmanship	Pass
Overall water protection	Protection from frequent rain
Physical ingress protection	Pass
Drop test	Safety: Pass Damage: Pass Function: Pass
Switch and connector cycling	Safety: Pass Damage: Pass Function: Pass

Solar Details	
PV module type	Polycrystalline Si
PV Maximum power point	2 Watts

Battery Details	
Battery replaceability	Easily replaceable with common tools
Battery chemistry	Lithium-iron-phosphate
Battery package type	2x 1865 package
Battery capacity	2,000 mAh
Battery nominal voltage	3.2 V
Appropriate battery protection circuit	Pass

Marks and Certifications	
Factory certification	ISO 9001:2008
Safety Certification	UL
Other Certification	CE

SSS Information	
Specs sheet expiration date	July, 2014
Revision	2012.06a

IEC 763/13

IECNORM.COM : Click to view the full PDF of IEC TS 62257-9-5:2016 RLV
Withdrawn

Special Features	
Mobile charging	Includes 5 mobile phone adaptor "tips" to charge mobile phone from battery
Housing materials	ABS body

Durability	
Overall durability and workmanship	Pass
Durability tests passed	Drop test, switch and connector cycling, strain relief test, physical ingress protection test, and protection from frequent rain

Solar Details	
PV module type	Polycrystalline silicon
PV maximum power point	2 W

Battery Details	
Battery replaceability	Easily replaceable with common tools
Battery chemistry	Lithium iron phosphate
Battery package type	2x 18650 package
Battery capacity	2 000 mAh
Battery nominal voltage	3,2 V
Appropriate battery protection circuit	Pass

Marks and Certifications	
Factory certification	ISO 9001:2008
Safety certification	UL
Other certification	CE

Product Details	
Manufacturer name	Sunshine Solar
Product name	Sunshine Lamp
Product model / ID number	sl-001
Contact information	sunny-info@sunshine.com
Website	www.sunshine.com/sunshine-lamp

SSS Information	
Specs sheet expiration date	July 2014
Minimum Quality Standards Framework Version	2013
Revision	2013.07a

IEC

Figure 9 – Last (second) portion of example SSS

IECNORM.COM : Click to view the full PDF of IEC TS 62257-9-5:2016 RLV
Withdrawn

Annex A
(informative)

Recommended quality standards ~~and performance targets~~ for off-grid lighting market support programme qualification

A.1 ~~Scope~~ Overview

The example quality standards and warranty requirements~~, and performance targets~~ given in Annex A are appropriate for qualification for market support programmes that support energy access for broad sets of end users with low to middle incomes who are off-grid in the developing world.

The target end users are typically cash-poor and will be expected to purchase qualifying products outright, under financing terms or through pay-as-you-go (PAYG) mechanisms.

Annex A is a bi-level qualification document. Meeting only the quality standards and warranty requirements provides access to basic programme services and incentives. ~~Extended services and incentives are available if the performance targets are met.~~

The aim of these quality standards is to protect end users from early failure and ensure that advertised information is valid. The warranty requirements provide a baseline of support. ~~The goal of the performance targets is to ensure users receive service levels that are at least as good as the incumbent technology – fuel based lighting.~~

NOTE Annex A is meant to be an informative example, with a structure and set of standards and ~~targets~~ performance criteria based on experience in a particular context. It is expected that programmes that reference this part of IEC 62257 will tailor a product specification to meet their needs.

A.2 Test requirements

Initial qualification under these standards ~~and targets~~ requires QTM test results (Clause 6). On-going qualification is subject to successful market checks according to the market check method (Clause 7). ~~Full re-~~ Renewal testing ~~with QTM~~ equivalent to a primary market check test, is required after two years.

A.3 Product category requirements

Annex A applies to fixed separate (indoor), portable separate, portable integrated and fixed integrated (outdoor) products. It is generally applicable only to products with a free on board (FOB) wholesale price of USD 100 or lower.

Qualification as a "separate" PV module requires meeting the criteria listed in Table A.1.

Table A.1 – Qualification as separate PV module

Criterion	Aspect(s)	Required value
PV module cable length	4.2.6.2 ~~Solar module~~ Cable length	≥ 3 m to qualify as a "separate" PV module with 10 % tolerance

IECNORM.COM : Click to view the full PDF of IEC TS 62257-9-5:2016 RLV
Withdrawn

A.4 Quality standards

The product shall meet each of the criteria listed in Table A.2 and Table A.3 to meet the quality standards.

Table A.2 – Truth-in-advertising tolerance

Truth-in-advertising criterion	Aspect(s) considered in assessment	Requirement
System performance tolerance – numeric ratings	4.2.8 ~~Run time~~ Performance aspects 4.2.9 Light output aspects Others, if applicable	≤ 15 % deviation from ratings (always ok if actual performance is better than advertised).
System components tolerance – numeric ratings	4.2.6 Solar module aspects 4.2.5 Battery performance aspects Others, if applicable	≤ 15 % deviation from ratings (always ok if actual performance is better than advertised).
Other numeric ratings tolerance	Multiple	≤ 15 % deviation from ratings (always ok if actual performance is better than advertised).
Overall truth-in-advertising statement	Multiple	Any description of the product that appears on the packaging, inside the package, and in any other media should be truthful and accurate. No statements should mislead buyers or end users about the features or utility of the product.

Table A.3 – Safety and durability standards *(1 of 2)*

Safety or durability criterion	Aspect(s) considered in assessment	Product category	Requirement
Overall water exposure protection	~~4.2.11 Water protection Integrated assessment~~ 4.2.3.1 Water protection – enclosure 4.2.3.2 Water protection – circuit protection and drainage 4.2.3.3 Water protection – overall 4.2.11.1 Product and manufacturer information 4.2.2.7 Packaging and user's manual information	Fixed separate (indoor)	No protection required.
		Portable separate	Protection from occasional exposure to rain.
		Portable integrated	Protection from frequent exposure to rain.
		Fixed integrated (outdoor)	Protection from permanent outdoor exposure.
		External PV modules	Modified IPx4 or circuit protection
Physical ingress protection	4.2.3.5 Physical ingress protection 4.2.3.6 Physical ingress protection – solar module	All except below	Minimum of IP2x protection.
		Fixed integrated (outdoor)	Minimum of IP5x protection
		External PV modules	Minimum of IP3x protection

IECNORM.COM : Click to view the full PDF of IEC TS 62257-9-5:2016 RLV
Withdrawn

Table A.3 *(2 of 2)*

Mechanical durability – drop test	4.2.3.7 Drop resistance	Fixed separate (indoor) and fixed integrated (outdoor)	None result in safety hazards. There is no requirement that the lighting kits are still functional after a drop.
		Portable separate	Maximum failure rate for functionality is 1/6; none result in safety hazards.
		Portable integrated	Maximum failure rate for functionality is 1/6; none result in safety hazards.
Mechanical durability – goosenecks and moving parts	4.2.3.8 Gooseneck and moving part durability	Any with gooseneck or moving parts	Maximum failure rate for functionality is 1/6; none result in safety hazards.
Mechanical durability – connectors	4.2.3.9 Connector durability	All products	Maximum failure rate for functionality is 1/6; none result in safety hazards.
Mechanical durability – switches	4.2.3.10 Switch durability	All products	Maximum failure rate for functionality is 1/6; none result in safety hazards.
Mechanical durability – strain relief	4.2.3.11 Strain relief durability	All products	Maximum failure rate for functionality is 1/6; none result in safety hazards.
Workmanship	4.2.3.12 Wiring quality	All products	Maximum prevalence of bad solder joints is 1/6 samples; maximum prevalence of poor wiring is 1/6 samples; maximum prevalence of overall workmanship failure is 1/6
Battery durability	4.2.3.13 Battery protection strategy 4.2.5.3 Battery storage durability 4.2.11.1 Product and manufacturer information 4.2.11.3 Third-party marks and certifications	All products	An appropriate battery protection strategy is used that will protect batteries from early failure and end users from harm. Lithium batteries shall additionally carry UN 38.3 certification and be protected with a cell balancing circuit. The battery capacity loss from storage is less than 25 % for the average sample. No more than 1/6 samples measures less than 35 %.
Lumen maintenance	4.2.4.2 2 000 h lumen maintenance	All products	~~L_{70}~~ L_{85} time is greater than 2 000 h for the average sample. No more than 1/6 samples fails (defined as being more than 10 % below ~~L_{70}~~ L_{85} at 2 000 h). OR L_{95} time is greater than 1 000 h for all 6/6 samples.
Fluorescent light durability	4.2.4.3 Fluorescent light durability	Products with fluorescent lights	Maximum failure rate for functionality is 1/6.
AC-DC charger safety	4.2.2 Product design, manufacture, and marketing aspects 4.2.11.3 Third-party marks and certifications	Products that include an AC-DC grid charger	Any included AC-DC charger carries approval from a recognized consumer electronics safety regulator, such as UL or similar.
Hazardous Substances Ban	4.2.2.4 Energy storage system information 4.2.2.6 Battery general aspects 4.2.11.1 Product and manufacturer information	All products	No battery is permitted to contain cadmium or mercury at levels greater than trace amounts.

IECNORM.COM : Click to view the full PDF of IEC TS 62257-9-5:2016 RLV
Withdrawn

A.5 Warranty and end user support requirements

The product shall meet each of the criteria listed in Table A.4 to meet the warranty requirements.

Table A.4 – End user support requirements

Support type	Aspect(s)	Requirement
Information on product design, utilization, and care	4.2.2.7 Packaging and user's manual information	For products that include charging ports, user manual shall present instructions for installation, use and troubleshooting of the system. Installation instructions shall include appropriate placement and installation of the PV module. A description of the method or pathway for replacing components, including the battery, as well as specifications of components that could require replacement (fuses, batteries, PV) shall be included. Installation and operation instructions should be presented using language and graphics that can be understood by the typical consumer.
Maintenance and warranty terms	4.2.2.8 Warranty information 4.2.11.2 Warranty coverage	End users are provided at least ~~six months~~ one year of warranty coverage from the point of purchase; it should cover manufacturing defects that impede operation under normal use and protection from early component failure, including coverage on the battery.

~~A.6 Performance targets~~

~~In addition to meeting the quality standards, at least one product setting shall meet one of the run time criteria and one of the lighting service criteria listed in Table A.5 and Table A.6 below to meet the performance targets. The tolerance for all targets is: The average DUT should be no worse than 10 % below the target. No DUT should fall more than 20 % below the target.~~

~~Table A.5 – Run time criteria for performance targets~~

~~Run time criterion~~	~~Aspect(s)~~	~~Requirement~~
~~Central charged product full-battery run time~~	~~4.2.7.4 Grid charge run time~~ ~~4.2.7.2 Full-battery run time~~	~~≥ 8 h~~
~~Independently solar charged product – solar day run time~~	~~4.2.7.3 Solar day run time~~	~~≥ 4 h from a standard solar day (5 kWh/m^2)~~
~~Independently electromechanically -charged product electromechanical run time characteristics~~	~~4.2.7.5 Electromechanical charge ratio~~ ~~4.2.7.2 Full-battery run time~~	~~Electromechanical charge ratio ≥ 10:1 and full-battery run time ≥ 2 h~~

~~Table A.6 – Lighting service criteria for performance targets~~

~~Light output criterion~~	~~Aspect(s)~~	~~Requirement~~
~~General illumination service~~	~~4.2.8.1 Average luminous flux output~~	~~≥ 20 lm~~
~~Task lighting service~~	~~4.2.8.3 Average light distribution characteristics~~	~~≥ 0,1 m^2 area of illumination ≥ 25 lux when the lamp is self-supported on the task surface or suspended from a 0,75 m distance from the surface.~~

IECNORM.COM : Click to view the full PDF of IEC TS 62257-9-5:2016 RLV
Withdrawn

Annex B
(informative)

Example quality standards, warranty requirements, and performance targets for bulk procurement qualification (sample tender)

B.1 Scope

These quality standards, warranty requirements, and performance targets are appropriate for qualification to provide products for a bulk procurement programme where products will be offered to end-users at a substantially discounted rate.

There are two classes of product that qualify for this procurement (Table B.1):

Table B.1 – Product classes qualified for bulk procurement

Product class	Basic requirements	Product categories allowed
Desk lamp	Meet quality standards, warranty requirements, and "desk lamp" performance requirements	Fixed separate (indoor), portable separate, or portable integrated
Multipoint lighting system	Meet quality standards, warranty requirements, and "multipoint lighting system" performance targets	Fixed separate (indoor), portable separate

B.2 Test requirements

Qualification requires QTM test results (Clause 6).

The test results and/or other information should be presented for each of the criteria listed in the quality standards, warranty requirements, and performance targets in support of the offer.

B.3 Product category requirements

This document applies to fixed separate (indoor), portable separate, and portable integrated products. It does not apply to products that only have fixed integrated (outdoor) lighting options.

This document applies only to solar-charged products.

Qualification as a "separate" PV module requires meeting the criteria listed in Table B.2:

Table B.2 – Qualification as separate PV module

Criterion	Aspect(s)	Required value
PV module cable length	4.2.6.2 Solar module cable length	≥ 3 m to qualify as a "separate" PV module with 10 % tolerance.

B.4 Quality standards

The product shall meet each of the criteria listed in Table B.3 and Table B.4:

IECNORM.COM : Click to view the full PDF of IEC TS 62257-9-5:2016 RLV
Withdrawn

Table B.3 – Truth-in-advertising tolerance

Truth-in-advertising criterion	Aspect(s) considered in assessment	Requirement
System performance tolerance – numeric ratings	4.2.7 Run time aspects 4.2.8 Light output aspects Others, if applicable	≤ 15 % deviation from ratings.
System components tolerance – numeric ratings	4.2.6 Solar module aspects 4.2.5 Battery performance aspects Others, if applicable	≤ 15 % deviation from ratings.
Other numeric ratings tolerance	Multiple	≤ 15 % deviation from ratings.
Overall truth-in-advertising statement	Multiple	Any description of the product that appears on the packaging, inside the package, and in any other media should be truthful and accurate. No statements should mislead buyers or end users about the features or utility of the product.

Table B.4 – Safety and durability standards

Safety or durability criterion	Aspect(s) considered in assessment	Product category	Requirement
Overall water exposure protection	4.2.11 Water protection integrated assessment 4.2.3.1 Water protection – enclosure 4.2.3.2 Water protection – circuit protection and drainage 4.2.10.1 Product and manufacturer information 4.2.2.7 Packaging and user's manual information	Fixed separate (indoor)	No protection required
		Portable separate	Protection from occasional exposure to rain
		Portable integrated	Protection from frequent exposure to rain
Physical ingress protection	4.2.3.3 Physical ingress protection	All products	Minimum of IP 2x protection
Mechanical durability – drop test	4.2.3.4 Drop resistance	Fixed separate (indoor)	No resistance required
		Portable separate	Maximum failure rate for functionality is 1/6; none result in safety hazards.
		Portable integrated	Maximum failure rate for functionality is 1/6; none result in safety hazards.
Mechanical durability – goosenecks	4.2.3.5 Gooseneck durability	Any with gooseneck	Maximum failure rate for functionality is 1/6; none result in safety hazards.
Mechanical durability – connectors	4.2.3.6 Connector durability	All products	Maximum failure rate for functionality is 1/6; none result in safety hazards.
Mechanical durability – switches	4.2.3.7 Switch durability	All products	Maximum failure rate for functionality is 1/6; none result in safety hazards.
Mechanical durability – strain relief	4.2.3.8 Strain relief durability	All products	Maximum failure rate for functionality is 1/6; none result in safety hazards.
Workmanship	4.2.3.9 Wiring quality	All products	Maximum prevalence of bad solder joints is 1/6 samples; maximum

IECNORM.COM : Click to view the full PDF of IEC TS 62257-9-5:2016 RLV
Withdrawn

			prevalence of poor wiring is 1/6 samples; maximum prevalence of overall workmanship failure is 1/6
Battery durability	4.2.3.10 Battery protection strategy	All products	An appropriate battery protection strategy is used that will protect batteries from early failure and end-users from harm.
Lumen maintenance	4.2.4.2 2 000 hour lumen maintenance	All products	L_{70} time is greater than 2 000 h for the average sample. No more than 1/6 samples fails (defined as being more than 10 % below L_{70} at 2 000 h).
Fluorescent light durability	4.2.4.3 Fluorescent light durability	Products with fluorescent lights	Maximum failure rate for functionality is 1/6.

B.5 Warranty requirements

The product shall meet each of the criteria listed in Table B.5.

Table B.5 – End-user support requirements

Support type	Aspect(s)	Requirement
Maintenance and warranty terms	4.2.2.8 Warranty information 4.2.10.2 Warranty coverage	End users are provided at least six months of warranty coverage from the point of purchase; it should cover manufacturing defects that impede operation under normal use and unambiguously include coverage on the battery.

B.6 Performance targets for desk lamps

Desk lamps should meet the requirements in Table B.6 and Table B.7 with at least one light point.

Table B.6 – Run time criteria for performance targets

Run time criterion	Aspect(s)	Requirement
Independently solar charged product – solar day run time	4.2.7.3 Solar day run time	≥ 4 h from a standard solar day (5 kWh/m^2).

Table B.7 – Lighting service criteria for performance targets

Light output criterion	Aspect(s)	Requirement
Task lighting service	4.2.8.3 Average light distribution characteristics	≥ 0,1 m^2 area of illumination ≥ 25 lux when the lamp is self-supported on the task surface or suspended from a 0,75 m distance from the surface.

B.7 Performance targets for multipoint lighting system

Multipoint lighting systems should have two or more light points that may each meet the criteria in Table B.8 and Table B.9 every day.

IECNORM.COM : Click to view the full PDF of IEC TS 62257-9-5:2016 RLV
Withdrawn

Table B.8 – Run time criteria for performance targets

Run time criterion	Aspect(s)	Requirement
Independently solar charged product – solar day run time	4.2.7.3 Solar day run time	≥ 4 h from a standard solar day (5 kWh/m^2) for each lighting point.

Table B.9 – Lighting service criteria for performance targets

Light output criterion	Aspect(s)	Requirement
General illumination service	4.2.8.1 Average luminous flux output	≥ 20 lm for each lighting point.

Multipoint lighting systems should also include the additional features listed in Table B.10.

Table B.10 – Additional features criteria for performance targets

Support type	Aspect(s)	Requirement
Mobile phone charging	4.2.2.9 Auxiliary features information	Product should have an auxiliary output for charging mobile phones with at least 3 connector options: mini-USB, "Nokia small barrel connector", and "Nokia large barrel connector".

B.8 Performance target tolerance

The tolerance for all performance targets is: The average DUT should be no worse than 10 % below the target. No DUT should fall more than 20 % below the target.

IECNORM.COM : Click to view the full PDF of IEC TS 62257-9-5:2016 RLV
Withdrawn

Annex B
(informative)

Reserved

Annex B is reserved as a placeholder.

Withdrawn
IECNORM.COM : Click to view the full PDF of IEC TS 62257-9-5:2016 RLV

Annex C
(informative)

Recommended SSS guidelines

C.1 ~~Scope~~ General

These guidelines apply to creating SSS for market support programmes. The goal of the SSS is to provide clear, verifiable, and accurate information on quality and performance to potential buyers, with a focus on distributors and bulk purchasing agents.

C.2 Qualification standards ~~and targets~~

To qualify for the SSS programme, a product shall meet the quality standards and warranty requirements listed in Annex A. ~~It is not necessary to meet the performance targets.~~

C.3 Test result requirements

C.3.1 Original testing

QTM test results, obtained in accordance with Clause 6, are required for initial SSS qualification and creation.

C.3.2 Retesting and updates

Table C.1 lists the requirements for retesting to update SSS.

Table C.1 – Requirements for retesting to update SSS *(1 of 2)*

Trigger for testing	Scope of testing	Test requirements	~~Notes~~ Remarks
Two years since previous QTM or MCM testing	Any element on SSS	QTM (Clause 6) MCM (Clause 7)	--
Product update with changes of less than ±10 % in performance aspects	None required	Self-declaration allowed	Performance aspects include light output and ~~run time~~ performance aspects.
Product update with changes of more than ±10 % in performance aspects	Elements that are different	Aspects related to element that is changing tested according to MCM (Clause 7) using randomly procured samples	--
Product update with changes in quality or durability aspects	Elements that are updated	Aspects related to element that is changing tested according to MCM (Clause 7) using randomly procured samples	Quality aspects include water protection, lumen maintenance, drop test, etc.
Product update with new, non-lighting features	Elements that are new	Aspects related to element that is changing tested according to MCM (Clause 7) using manufacturer-provided samples	--

IECNORM.COM : Click to view the full PDF of IEC TS 62257-9-5:2016 RLV
Withdrawn

Table C.1 *(2 of 2)*

A programme-initiated market check test (in accordance with MCM (Clause 7) indicates an improvement in quality or performance)	None required	Accept new results	--
A programme-initiated market check test (in accordance with MCM (Clause 7) indicates a **decline** in quality or performance)	Any element that is shown to decline	Aspects related to element that is changing tested according to MCM (Clause 7) using randomly procured samples	This essentially means that there is a chance to prove that programme-initiated market check results were an anomaly in cases where they indicate a reduction in quality or performance.

C.4 Style and format

Following are the style guidelines for SSS.

a) Dominant colours: black and white.

b) Secondary colours should be consistent and harmonized (e.g. on graphs); the base colour may be from the product packaging or corporate branding from the product marketer.

c) Product images: colour image on a white background.

d) Font: Helvetica; 12 pt for most text, 16 pt for product name on headline, 10 pt for notes and graphics.

e) Language: English (optional to create translations in other languages).

f) Style: write in a way that is clear and understandable by a broad set of potential readers.

C.5 Reporting precision

The qualitative parts of the specification sheet (warranty, manufacturer name, lighting type, etc.) should always be accurate and updated.

Quantitative parts of the specification sheet that are reported on a continuous scale may be rounded for ease of interpretation. The rounded specification shall be reported so that it meets the precision guidelines presented in Table C.2. The guidelines are in terms of significant figures of reporting (s.f.). If one is rounding to the maximum precision, the rounding should be according to standard conventions ($\geq 0{,}5$ = rounds to 1; $< 0{,}5$ = rounds to 0). Alternatively, if the minimum precision requirements are lower than the maximum, one may round further (to fewer significant figures than the maximum) but any further rounding shall be in the "allowable direction" as defined in the table, starting from the original measured value plus or minus the percentage adjustment that is allowed before additional rounding (i.e. the standard rounding convention does not apply in that case).

IECNORM.COM : Click to view the full PDF of IEC TS 62257-9-5:2016 RLV
Withdrawn

Table C.2 – Recommended precision requirements for metrics on a continuous scale

Metric	Maximum precision of reporting	Minimum precision of reporting	Maximum adjustment before rounding	Allowable direction for additional rounding	Example(s)
Run time (h)	2 s.f.	1 s.f.	5 %	Down	4,33 h → 4,3 h or 4 h 36,6 h → 37 h or 30 h
Light output (lm)	2 s.f.	1 s.f.	5 %	Down	19,2 lm → 19 lm or 20 lm
Colour rendering (CRI) (R_a)	2 s.f.	2 s.f.	n/a	n/a	83,2 → 83
Colour temperature (CCT) (K)	2 s.f.	2 s.f.	n/a	n/a	4 678 K → 4 700 K
Light distribution (FWHM)	2 s.f.	2 s.f.	n/a	n/a	87° → 87° 178° → 180°
Battery capacity (mAh)	2 s.f.	2 s.f.	n/a	n/a	1 432 mAh → 1 400 mAh or 1 000 mAh
Other information	2 s.f.	1 s.f.	5 %	Varies	n/a
Key s.f. significant figures					

C.6 Results verification

Each SSS includes a unique internet URL that is directed towards a web page ~~that is managed by [programme name]~~. If one goes to the web page, it is possible to download a verified copy of the SSS to ensure the veracity and validity of SSS.

C.7 Section descriptions

C.7.1 General

Subclauses C.7.2 through C.7.11 should be included in the SSS. Each section should begin with a grey bar with the section name in bold, black type. The elements in each section should be black type on a white background with thin grey lines separating the elements.

C.7.2 Header/overall performance

C.7.2.1 General

This SSS section includes the name of the product in the header area and a link to verify the SSS. The header elements are white text on a black background.

Below that is a description of the overall performance – brightness and run time – for up to two settings. For each of the settings listed, the lumen output and hours of run time should be described using plain language phrasing. The run time should be "on a full battery charge" for AC charged or central charging model products, "after one day of solar charging" for solar-charged products and "after XX minutes/hours of cranking" for electromechanically-charged products.

Next to the key performance indicator description is a "thumbnail" image of the product, only including items that are included in the package.

In this SSS section, only the content is displayed (the element names are not indicated). Table C.3 lists all of the elements that should be included in the header area.

IECNORM.COM : Click to view the full PDF of IEC TS 62257-9-5:2016 RLV
Withdrawn

Table C.3 – Elements in the header/overall performance SSS section

Element	Display type	Optional or required	Aspect(s) involved/ origin of information	~~Notes~~ Remarks
Product name	Text	Required	4.2.11.1 Product and manufacturer information	The product name should be "complete" enough to differentiate it from other similar products in the same manufacturing line. EXAMPLE Sunshine Lamp
Verification link	Text	Required	Generated by SSS programme website developer	This unique link should point to a webpage where the original, up-to-date SSS is available for verification. EXAMPLE www.example.org/sss/sunshine-lamp
Expiration date	Text	Required	From QTM report	Indicate a date two years after the completion of the QTM test report that is the foundation for the SSS.
Results summary statement	Text	Required	4.2.8 ~~Run time~~ Performance aspects 4.2.8.3 Solar-day lighting run time 4.2.9.1 Average luminous flux output	This is the text that describes the run time and light output from the product, synthesized as a single lighting service number. See details on calculation in C.7.4. EXAMPLE 240 lumen-hours per day of solar charging.
Thumbnail image	Image	Required	Provided directly by manufacturer or from 4.2.2.11 Other visual screening results.	The image should show the product against a white background.
Graphical summary	Graphic	Required	4.2.8 ~~Run time~~ Performance aspects 4.2.9.1 Average luminous flux output 4.2.9.3 Average light distribution characteristics	This is a graphical summary of the run time and brightness as described in the Results summary statement. It also includes an iconographic summary of features and quality standards~~, and performance targets~~.

C.7.2.2 Graphical summary instructions

The graphical summary should include two elements.

- Graph(s) showing the run time and light output (or light distribution characteristic area) for each of the settings that are detailed in other sections.
- Icons indicating successful passing or presence of the following features:
  - overall workmanship pass;
  - number of ports and port types;
  - mobile charging feature;
  - number of light points;
  - meeting quality standard ~~and/or performance target~~ for a particular program;
  - optional pay-as-you-go (PAYG) feature.

C.7.3 General information

Table C.4 lists the elements in the general information SSS section.

IECNORM.COM : Click to view the full PDF of IEC TS 62257-9-5:2016 RLV
Withdrawn

Table C.4 – Elements in the general information SSS section

Element	Display type	Optional or required	Aspect(s) involved/ origin of information	~~Notes~~ Remarks
Manufacturer	Text	Required	4.2.11.1 Product and manufacturer information	The name of the manufacturer or "official" marketing firm for the product. EXAMPLE Sirius Lighting Corporation
Product name	Text	Required	4.2.11.1 Product and manufacturer information	The product name should be "complete" enough to differentiate it from other similar products in the same manufacturing line. EXAMPLE Sunshine Lamp
Model number	Text	Required	4.2.11.1 Product and manufacturer information	Often more detailed than the product name; may include version number.
Contact	Text	Required	4.2.11.1 Product and manufacturer information	An email or phone contact at the manufacturer
Website	Text	Optional	4.2.11.1 Product and manufacturer information	A URL for the manufacturer web page.
Warranty	Text	Required	4.2.2.8 Warranty information 4.2.11.2 Warranty coverage	A short (< 200 characters) description of the warranty coverage that highlights the duration of coverage; this should match with the detailed information provided to consumers and documented in 4.2.2.8 Warranty information.

C.7.4 Performance details

Table C.5 lists the elements in the performance details SSS section.

IECNORM.COM : Click to view the full PDF of IEC TS 62257-9-5:2016 RLV
Withdrawn

Table C.5 – Elements in the performance details section

Element	Display type	Optional or required	Aspect(s) involved/ origin of information	~~Notes~~ Remarks
Lighting full-battery run time	Text	Required	4.2.8.5 Lighting full-battery run time	Specify a full-battery run time for each setting included in any other part of the SSS. The graphics include a stacked horizontal bar graph that indicates run time at various settings with the same axis as other run time graphs.
Run time per day of solar charging	Text	Required for solar products	4.2.8.3 Solar-day lighting run time	Specify a solar run time for each setting included in any other part of the SSS. The graphics include a stacked horizontal bar graph that indicates run time at various settings with the same axis as other run time graphs.
Run time after cranking for five minutes	Text	Required for electromechanically-charged products	4.2.8.7 Electromechanical charge ratio 4.2.8.5 Lighting full-battery run time	Specify an electromechanical run time for each setting included in any other part of the SSS.
Light output	Text	Required	4.2.9.1 Average luminous flux output	Include for each setting
Task surface brightness	Text	Optional	4.2.9.3 Average light distribution characteristics	Include for each setting
Total lighting service	Text	Required	Synthesis of other elements in performance details	For solar products, equals the product of solar-day lighting run time and light output. For other products, equals the product of lighting full-battery run time and light output. The units are lumen-hours/solar day or lumen-hours/full-charge.

C.7.5 Light output

Table C.6 lists the elements in the light output SSS section.

Table C.6 – Elements in the light output SSS section

Element	Display type	Optional or required	Aspect(s) involved/ origin of information	~~Notes~~ Remarks
Lamp type	Text	Required	4.2.2.3 Lighting system information	Include number and type of light sources.
Colour characteristics	Text	Required	4.2.9.4 Colour characteristics	Include for highest setting; use "slider" graphics to display
Distribution category	Text	Required	4.2.9.2 Full width half maximum (FWHM) angles	Place in category based on FWHM angle: Narrow (< 15°), Wide (15° to 270°), Omni (> 270°)
Lumen maintenance	Text	Required	4.2.4.2 2 000 h lumen maintenance	Indicate fraction of original light output remaining at 2 000 h of operation.

C.7.6 Special features

Table C.7 lists the elements in the special features SSS section.

IECNORM.COM : Click to view the full PDF of IEC TS 62257-9-5:2016 RLV

Table C.7 – Elements in the special features SSS section

Element	Display type	Optional or required	Aspect(s) involved/ origin of information	~~Notes~~ Remarks
Mobile charging	Text	Optional	4.2.2.9 Auxiliary ~~features~~ outlets, ports and adapters information	Specify if a mobile charging feature is available
Other features	Text	Optional	4.2.2.9 Auxiliary ~~features~~ outlets, ports and adapters information	Specify other features, such as housing material.

C.7.7 Durability

Table C.8 lists the elements in the durability SSS section.

Table C.8 – Elements in the durability SSS section

Element	Display type	Optional or required	Aspect(s) involved/ origin of information	~~Notes~~ Remarks
Overall durability and workmanship	Text	Required	Multiple	Indicate pass with graphic indicator (all products shall pass this requirement to use the SSS).
Water protection	Text	Required	Water exposure protection as defined in Annex U: physical and water ingress protection test or Annex V: Level of water protection	Specify the overall level of water protection and the elements of the product that contribute to the level of protection (enclosure, product design, user information).
Physical ingress protection	Text	Required	4.2.3.5 Physical ingress protection	Indicate pass or fail.
Drop test	Text	Required	4.2.3.7 Drop resistance	Indicate pass or fail for damage, functionality, and safety.
Switches, connectors, strain relief, and goosenecks/moving parts	Text	Required	4.2.3.8 Gooseneck and moving part durability 4.2.3.9 Connector durability 4.2.3.10 Switch durability 4.2.3.11 Strain relief durability	Indicate pass or fail for damage, functionality, and safety.

C.7.8 Solar module details

Table C.9 lists the elements in the solar module details SSS section.

Table C.9 – Elements in the solar module details SSS section

Element	Display type	Optional or required	Aspect(s) involved/ origin of information	~~Notes~~ Remarks
PV module type	Text	Optional	4.2.2.2 Charging system information	Indicate PV chemistry (e.g. mono-Si).
PV maximum power	Text	Optional	4.2.6.1 Solar I-V curve parameters	Specify the PV power at standard test conditions (STC).

IECNORM.COM : Click to view the full PDF of IEC TS 62257-9-5:2016 RLV
Withdrawn

C.7.9 Battery details

Table C.10 lists the elements in the battery details SSS section.

Table C.10 – Elements in the battery details SSS section

Element	Display type	Optional or required	Aspect(s) involved/ origin of information	~~Notes~~ Remarks
Battery replaceability	Text	Required	4.2.2.5 Battery easy replaceability	Either "easily replaceable" or "requires specialized technician".
Battery chemistry	Text	Required	4.2.2.4 Energy storage system information	Indicate chemistry.
Battery package type	Text	Required if battery is easily replaceable, otherwise optional	4.2.2.6 Battery general aspects	Indicate the battery package type and/or size.
Battery capacity	Text	Required	4.2.5.1 Battery capacity	Indicate battery capacity from battery test (Annex K).
Battery nominal voltage	Text	Required if battery is easily replaceable, otherwise optional	4.2.2.6 Battery general aspects 4.2.5.4 Battery nominal voltage	Indicate the nominal voltage.
Appropriate battery protection strategy	Text	Optional	4.2.3.13 Battery protection strategy	Indicate "pass" if battery protection is appropriate (this is required to use SSS).

C.7.10 Marks and certifications

Table C.11 lists the elements in the marks and certifications SSS section.

Table C.11 – Elements in the marks and certifications SSS section

Element	Display type	Optional or required	Aspect(s) involved/ origin of information	~~Notes~~ Remarks
Factory certification	Text	Optional	4.2.11.3 Third-party marks and certifications	For example ISO 9001.
LED / CFL certification	Text	Optional	4.2.11.3 Third-party marks and certifications	For example UV-free LEDs.
Safety certification	Text	Optional	4.2.11.3 Third-party marks and certifications	For example UL.
Durability certification	Text	Optional	4.2.11.3 Third-party marks and certifications	For example UV-resistant plastics used.
Other certifications	Text	Optional	4.2.11.3 Third-party marks and certifications	Allowed if they pertain to the particular product and are relevant (e.g. CE, RoHS).

IECNORM.COM : Click to view the full PDF of IEC TS 62257-9-5:2016 RLV
Withdrawn

C.7.11 SSS information

Table C.12 lists the elements in the SSS information section.

Table C.12 – Elements in the SSS information section

Element	Display type	Optional or required	Aspect(s) involved/ origin of information	~~Notes~~ Remarks
Expiration date	Text	Required	From QTM report	Indicate a date two years after the completion of the QTM test report that is the foundation for the SSS.
Revision	Text	Required	n/a	Indicate an internal SSS revision tracking number.

C.8 Example sheet

An example standardized specification sheet is provided in Figure 8 and Figure 9.

Withdrawn
IECNORM.COM : Click to view the full PDF of IEC TS 62257-9-5:2016 RLV

Annex D
(normative)

Manufacturer self-reported information

D.1 Background

Having proper manufacturer information is important for communication throughout the testing process as well as for understanding key product information and any certifications possessed by the manufacturer's lab or product ~~may have~~. To this end, there are three categories of self-reported information: manufacturer information, product information, and manufacturer self-certification regarding either the manufacturing lab or product.

D.2 Outcomes

The manufacturer self-reported information outcomes are listed in Table D.1.

Table D.1 – Manufacturer self-reported information outcomes

Metric	Reporting units	Related aspects	Notes
Manufacturer information	Varied	4.2.11.1 Product and manufacturer information	Record all provided manufacturer information
Product information	Varied	4.2.11.1 Product and manufacturer information	Record all provided product information
Self-certification information	Varied	4.2.11.3 Third-party marks and certifications	Record all manufacturer or product certifications

D.3 Solicited information

D.3.1 General

At a minimum, the information contained in D.3.2 and D.3.3 should be solicited from the manufacturer.

D.3.2 Confidential information (not released publicly)

D.3.2.1 Manufacturer information

The following confidential manufacturer information should be solicited:

a) manufacturer company ~~physical address~~ name;
b) contact person name;
c) contact person position at company (i.e. job title);
d) manufacturer company physical address;
e) contact telephone number(s);
f) contact fax number;
g) contact e-mail address.

If separate people manage contracting issues and technical testing questions, request contact information for both parties.

IECNORM.COM : Click to view the full PDF of IEC TS 62257-9-5:2016 RLV

D.3.2.2 Product information

The following confidential product information should be solicited:

a) markets in which the product is for sale (e.g., Kenya, India, China);
b) free on board (FOB) product price for at least 1 000 units ($);
c) typical product shipping point of origin;
d) product driver type (e.g., resistor, pulse-width modulation);
e) battery ~~charge control~~ protection methods (i.e., deep discharge protection and/or overcharge protection);
f) ~~description~~ list of battery charge control methods;
g) description of deep discharge charge control, including the low voltage disconnect threshold;
h) description of overcharge protection charge control, including the overcharge protection disconnect voltage;
i) battery information sheet from battery manufacturer, preferably showing acceptable deep discharge protection and overcharge protection cutoffs at a minimum;
j) whether the battery contains internal protection circuitry;
k) description of special testing considerations, such as any characteristics that would impede the testing process. Characteristics include: an auto-off function that turns the light off after a specific number of hours of operation; the product disables if the enclosure is opened; the product connects to a wireless network; the product is tamperproof;
l) expected/rated performance, including:
    1) name, light output, full battery run time, and solar run time for each setting;
    2) brightness setting specifications, if publicly advertised or provided to the laboratory by the manufacturer;
    3) rated performance of any auxiliary appliances included with the product.
m) the names of the settings the manufacturer would wish to be tested.

D.3.3 Public information (may be released publicly)

D.3.3.1 Manufacturer information

The following public manufacturer information should be solicited:

a) ~~manufacturer company~~ official customer facing/brand name;
b) manufacturer company physical address;
c) contact person name;
d) contact person position at company (i.e. job title);
e) contact telephone number;
f) contact fax number;
g) contact e-mail address;
h) manufacturer company website.

D.3.3.2 Product information

The following public product information should be solicited:

a) product name;
b) product model number;

IECNORM.COM : Click to view the full PDF of IEC TS 62257-9-5:2016 RLV
Withdrawn

c) all product lighting technologies used (e.g. fluorescent tube, LED). If the product uses LEDs, are the LEDs high-power or low-power?

d) battery chemistry (SLA, NiMH, etc.);

e) battery package type;

f) battery nominal voltage (V);

g) battery capacity (mAh);

h) charge/discharge rate at which the battery capacity is specified;

i) all product charging system types (e.g. solar module, AC power, dynamo):

   1) if the product has AC power charging, is an adapter included?

   2) if the product has solar charging, what active material is used in the PV module (e.g., mono-Si, poly-Si, CIS, etc.)?

j) all included product features (e.g. mobile phone charging, radio);

k) if the product has mobile phone charging, are adapters included?

l) all optional product features (e.g. mobile phone charging, radio);

m) description of product warranty terms, including duration;

n) confirmation of AC-DC charger approval from a recognized consumer electronics safety regulator, such as UL (if product includes an AC-DC charger);

o) high resolution product photograph on a white or transparent background.

D.3.3.3 Manufacturer certifications

These certifications should be accompanied with supporting documentation, such as copies of the original certifications, letters from an appropriate organization, or self-certification.

a) All manufacturer company certifications and markings (e.g. ISO 9000, UL, CE).

b) All product certifications and markings (e.g. UV-resistant plastic, UV-free LEDs, high-temperature batteries).

c) All component-level certifications and markings (e.g. IEC 62133 for battery safety).

D.4 Reporting

Report the following in the product manufacturer self-reported information report ~~(a sample template is provided in Annex X)~~.

- Metadata:
  - report name;
  - product manufacturer;
  - product name;
  - product model number;
  - name of test laboratory;
  - approving person;
  - date of report approval.
- Confidential information:
  - manufacturer company name;
  - contact person name;
  - contact person position at company;
  - manufacturer company physical address;
  - contact telephone number;

IECNORM.COM : Click to view the full PDF of IEC TS 62257-9-5:2016 RLV
Withdrawn

- contact fax number;
- contact e-mail;
- product markets;
- product FOB price ($);
- product shipping point of origin;
- product driver type;
- product charge control methods and descriptions;
- battery information sheet from battery manufacturer;
- statement whether battery contains internal protection circuitry;
- description of special testing considerations;
- expected/rated performance for each setting;
- names of the settings the manufacturer would wish to be tested.

- Public information:
  - official customer facing/brand name;
  - manufacturer company physical address;
  - contact person name;
  - contact person position at company;
  - contact telephone number;
  - contact fax number;
  - contact e-mail;
  - manufacturer company website;
  - product name;
  - product model number;
  - product lighting technologies;
  - product battery chemistry;
  - product battery package type;
  - product battery nominal voltage (V);
  - product battery capacity (mAh);
  - charge/discharge rate at which the battery capacity is specified;
  - product charging systems;
  - included product features;
  - optional product features;
  - description of product warranty terms;
  - confirmation of AC-DC charger approval;
  - high resolution product photograph on a white or transparent background;
  - manufacturer company certifications;
  - product certifications;
  - component certifications.

IECNORM.COM : Click to view the full PDF of IEC TS 62257-9-5:2016 RLV
Withdrawn

Annex E
(normative)

Product sampling

E.1 Background

Proper product sampling is the first step in the testing process, and it is critical to maintaining the test method's fairness and credibility.

E.2 Test outcomes

The product sampling outcomes are listed in Table E.1.

Table E.1 – Product sampling outcomes

Metric	Reporting units	Related aspects	~~Notes~~ Remarks
Sample type	Retail/warehouse	n/a	--
Sample procurement agency	Agency name	n/a	The third-party agency that procures the samples
Sample procurement agent	Name	n/a	The name of the person who procures the samples
Sample procurement date	Date	n/a	--
Sample procurement address(es)	Address(es)	n/a	--
Sample shipping date	Date	n/a	The date the samples are shipped to the test lab(s) from the third-party sampling agency
Test lab(s)	Test lab name(s)	n/a	--
Test lab address(es)	Address(es)	n/a	--
Sample delivery date(s)	Date(s)	n/a	The date the samples are received by the test lab(s)

E.3 Related tests

Testing is predicated upon the product samples already being procured, shipped, and received at the test lab(s).

E.4 Procedure

E.4.1 Retail sampling

E.4.1.1 General

For retail sampling, third-party agents will procure product samples from a variety of retail outlets in the market.

E.4.1.2 Equipment requirements

No equipment is required for retail sampling.

IECNORM.COM : Click to view the full PDF of IEC TS 62257-9-5:2016 RLV
Withdrawn

E.4.1.3 Test prerequisites

Samples shall be procured from a geographically-diverse set of retail outlets. Retail outlets include both vendors or retail shops where end users may directly purchase products, and local or regional distributors.

E.4.1.4 Apparatus

No apparatus is required for retail sampling.

E.4.1.5 Procedure

The following steps shall be followed.

a) The third party sampling agency identifies a specified number of retail outlets in the market from various geographic locations.

b) The sampling agency selects a subset of the retail outlets to procure samples from, ensuring that the subset of retail outlets is geographically diverse (e.g. each retail outlet is in a different city and/or country than the rest of the subset).

c) The sampling agency procures the product samples from the various retail outlets, ensuring that no more than 40 % of the overall number of procured samples comes from any single retail outlet.

d) The date, locations, sampling agent, and number of samples procured from each location should be documented by the sampling agency.

e) The sampling agency ships the products to one or more test labs and reports the shipment tracking number(s), when available.

f) Once received at the test lab(s), the date(s) of reception, test lab name(s), and test lab location(s) should be documented.

E.4.1.6 Calculations

There are no calculations for retail sampling.

E.4.2 Warehouse sampling

E.4.2.1 General

For warehouse sampling, third-party agents will procure samples from a warehouse, distributorship, factory, or other bulk storage location.

E.4.2.2 Equipment requirements

No equipment is required for warehouse sampling.

E.4.2.3 Test prerequisites

The sampling location should be the main bulk storage location in the region, and there shall be enough products available that the procured samples account for no more than 3,5 % of the total product stock. Furthermore, the sampling agent shall be able to sample from the bulk storage location's entire stock.

E.4.2.4 Apparatus

No apparatus is required for warehouse sampling.

E.4.2.5 Procedure

The following steps shall be followed.

IECNORM.COM : Click to view the full PDF of IEC TS 62257-9-5:2016 RLV
Withdrawn

a) At least 24 h before the sampling takes place, the sampling agency shall make contact (via email or telephone) with representatives at the sampling location to provide proper notice and ensure that the number of samples procured will not exceed 3,5 % of the sampling location's total product stock.

b) The sampling agency randomly procures the product samples from the entire bulk storage location's stock (i.e. the entire product stock shall be available to sample from).

c) The date, location, sampling agent, and number of samples procured should be documented by the sampling agency.

d) The sampling agency ships the products to one or more test labs and reports the shipment tracking number(s), when available.

e) Once received at the test lab(s), the date(s) of reception, test lab name(s), and test lab location(s) should be documented.

E.4.2.6 Calculations

There are no calculations for warehouse sampling.

E.5 Reporting

Report the following in the product sampling test report ~~(a sample template is provided in Annex X)~~.

- Metadata:
  - report name;
  - procedure(s) used;
  - product manufacturer;
  - product name;
  - product model number;
  - name of test laboratory;
  - approving person;
  - date of report approval.
- Sampling instructions
- Sampling and shipping information:
  - name of sampling agency;
  - name(s) of sampling agent(s);
  - sampling location name(s), address(es), and description(s);
  - number of samples procured (at each location);
  - name of shipping agency;
  - shipment tracking number(s);
  - date samples are shipped to test lab(s);
  - date samples are received at test lab(s).

IECNORM.COM : Click to view the full PDF of IEC TS 62257-9-5:2016 RLV
Withdrawn

Annex F
(normative)

Visual screening

F.1 Background

The visual screening process covers DUT specifications, properties (such as external DUT measurements), functionality, observations, and internal/external construction quality.

The DUT's components, materials, and utilities are categorized and, in some cases, evaluated. The visual screening test provides a thorough qualitative and quantitative assessment of the DUT as received from the manufacturer and serves to uniquely identify a DUT. The DUT's operation out of the packaging is documented before any modifications are made for subsequent tests.

F.2 Test outcomes

The test outcomes of the visual screening process are listed in Table F.1.

Table F.1 – Visual screening test outcomes

Metric	Reporting units	Related aspects	~~Notes~~ Remarks
DUT specifications	Varied	4.2.2 Product design, manufacture, and marketing aspects	Record all provided specifications
DUT information	Varied	4.2.2 Product design, manufacture, and marketing aspects 4.2.11.1 Product and manufacturer information	Record dimensions and qualitative descriptors
Internal DUT inspection	Varied	4.2.3 Product durability and workmanship aspects	Describe/document wiring and electronics fixtures
Internal DUT inspection	Number of defects	4.2.3 Product durability and workmanship aspects	Record the number of soldering and/or electronics quality defects

F.3 Related tests

Annex F is not related to any of the other annexes.

F.4 Procedure

F.4.1 Properties, features, and information

F.4.1.1 General

Relevant DUT information, such as external DUT measurements and observations, are recorded to capture the DUT's characteristics. Sufficient comments should be provided to thoroughly describe the DUT's characteristics. This part of the procedure may be completed on a single sample.

IECNORM.COM : Click to view the full PDF of IEC TS 62257-9-5:2016 RLV

F.4.1.2 Equipment requirements

The following equipment is required. Equipment shall meet the requirements in Table CC.2.

- Callipers and/or ruler.
- Balance (scale).
- Bright task light with good colour rendering ~~(≥ 700 lux and ≥ 85 CRI recommended)~~.
- Camera.

F.4.1.3 Test prerequisites

The DUT should be new, unaltered, and in its original packaging. Read the DUT's box and documentation for instructions on using the DUT. Consult the manufacturer for missing information pertaining to the required observations.

F.4.1.4 Apparatus

The DUT may be positioned under a bright task light in the examination, if necessary.

F.4.1.5 Procedure

The following steps shall be followed. All photographs or scans of packaging, documents (e.g., user's manual and warranty card), and labels shall be of sufficient quality that all text is legible (unless illegible in the original document) and all diagrams, icons, and other images are clearly reproduced. All photographs of DUT components shall be of sufficient quality that all relevant text is legible (unless illegible on the item being photographed) and all relevant icons and images are clearly reproduced.

a) Provide the following.

1) Note all available manufacturer contact information (e.g. name, address, phone number, email, website, etc.).
2) Photograph or scan all sides of the DUT's retail box and describe the box's quality, if available.
3) Note if a user's manual is included with the DUT. If so, report the type of manual it is (e.g booklet, sheet, etc.), report the language(s) in which it is written, and photograph or scan each page.
4) If a warranty is available for the DUT, record the warranty duration, in months, describe the terms and conditions, and photograph or scan the warranty material. Note if there are separate warranty durations for the battery and included appliances.
5) Photograph or scan any other documents included with the DUT.
6) Note and describe any instructions for proper disposal of the battery and/or product.
7) Note and describe any instructions for replacement of the battery.
8) Note and describe any instructions for obtaining service or replacement parts in case of a problem with the product.
9) Note and describe any labelling of hazards.
10) Note and describe any instructions for ensuring the PV module is not shaded.
11) Note and describe any instructions on how to connect the PV module to the product's main unit for charging.
12) Note and describe any instructions on facing the PV module surface towards the sun.
13) Note and describe any required pre-use instructions during installation (e.g. charging the battery fully, inserting a supplied fuse).
14) Note and describe any instructions on how to make required permanent connections during installation.
15) Note and describe any instructions on how to connect advertised appliances.

IECNORM.COM : Click to view the full PDF of IEC TS 62257-9-5:2016 RLV
Withdrawn

16) Note and describe any instructions on the battery's state of charge.

17) Note and describe any specifications for product components that could require replacement (e.g. fuses, lights, PV module, batteries).

18) Note and describe any instructions on keeping the PV module surface clean.

19) Note and describe any instructions to not ding the PV module from the backside.

20) Note and describe any instructions to not carry the PV module by its cable.

21) Note and describe any instructions on preventing the PV module from cracking during handling.

22) Note and describe any instructions to keep the product away from fire.

23) Note and describe any instructions on how to install the product securely.

24) Note and describe any instructions on the product's graphical display, if a display is included.

25) Note and describe any instructions to not drop the product.

26) Note and describe any instructions to not cut or heat the product's cables.

27) Note and describe any instructions to avoid keeping the battery at a low state of charge for long periods of time.

28) Note and describe any instructions on replacing product components that could require replacement (e.g. fuses, lights, PV, batteries).

29) Note and describe any instructions to fully charge the batteries before long-term storage of the product.

b) Measure the following (in the specified units) without disassembling the DUT.

1) Measure the DUT's mass, in grams (g), as it would typically be used in a lighting application (not including any external solar modules or mobile phone charging connectors) and indicate the specific components included in mass measurement.

2) Measure any included appliances' mass, in grams (g).

3) Measure and describe the length, in metres (m), of any cables connecting the control box to the batteries, the control box to the lamp units or the control box to any included appliances.

4) Measure the length, width, and height, in centimetres (cm), of the DUT, lamp unit(s) and any additional included appliances, components or interconnected parts, separately. Do not include dimensions of an external PV module or any mobile phone charging accessories.

c) Observe the following (consult the documentation for any explanations; see 4.1.3 ~~Lighting kit parts~~ for details on the terminology used in the following steps).

1) Note if any cables will be predominantly used outdoors. Note if certification documentation has been provided for these cables indicating they are suitable for outdoor use.

2) Note the DUT's total number of unique lighting units, indicate the technology used in each (LED, fluorescent, incandescent, etc.), and provide a description and photographs of each.

3) Note the number of light points in each lighting unit.

4) Note the number of arrays contained in each light point (e.g. a group of LEDs that function as a single unit is an array).

EXAMPLE If a lamp unit contains 10 LEDs, and 5 LEDs illuminate for one DUT setting, and all 10 LEDs illuminate for the DUT's only other setting, this lamp unit contains two arrays (5-LED and 10-LED).

5) Note the number of independent light sources (i.e. the total number of LEDs or other bulb types) in each array.

6) Determine the number of DUT light output settings. Use the setting descriptions provided by the DUT's literature. If no setting descriptions are provided, use appropriate descriptions (e.g. high, medium, low, 1 high-power LED, 3 low-power LEDs, etc.).

IECNORM.COM : Click to view the full PDF of IEC TS 62257-9-5:2016 RLV
Withdrawn

7) Describe and photograph the arrangement of lamp units, included appliances, battery(-ies), and energy source(s) in terms of housing/cases.

EXAMPLE There are two housings. In the main housing, there is a battery with a gooseneck lamp protruding from the housing. The other housing is a remote lamp unit with no battery; it is connected to the main housing with a 4 m cable that has an inline switch. The PV module is external and connects to the main housing with a cable.

8) Describe the materials that compose the DUT's lamp units, battery housing, charge controller housing, included appliances, and/or any other housings (e.g. plastic, metal, glass, or other).

9) Note if the DUT and included appliances have any indicators (e.g. charge indicators) and, if so, include descriptions of indication meanings and photographs of the indicators.

10) Note and photograph any other features present on or included with the DUT and included appliances (e.g. handles, mounting brackets, stands).

11) Note if the DUT has a radio or mobile phone charging capabilities. If so, photograph the connectors.

12) Describe and photograph any other included appliances, accessories or connectors not yet documented (excluding ~~those~~ DC ports and connectors associated with the DUT's PV module).

13) If a grid charger is included, note if it carries ~~approval from a recognized consumer electronics safety regulator, such as UL~~ any recognized safety marks, such as the CE mark. Be sure to photograph any labels provided on the grid charger.

14) Indicate if the DUT provides central (e.g. grid, central station) or independent (e.g. electromechanical, solar PV) charging and the specific charging means and describe the robustness of each included charging mechanism.

d) Provide the following information regarding the DUT's DC ports.

1) Number of distinct port types.

2) For each port type:

i) brief description of the port (e.g. "USB port 1");

ii) receptacle type (e.g. USB 2 type A, barrel jack, cigarette lighter jack);

iii) number of identical ports of this type;

iv) nominal port voltage, determined from any of the following sources:

– manufacturer-supplied information;

– user documentation and labelling;

– if the port is a standardized or conventional connector, the applicable standards and/or conventions;

– measurement of the open-circuit voltage and the voltage under load.

v) rated maximum port current, if any, determined from any of the following sources:

– measurement of the open-circuit voltage and the voltage under load;

– manufacturer-supplied information;

– user documentation and labelling;

– markings on any DUT components, such as a fuse or circuit breaker, if it can be determined that the component limits the current for the port.

vi) whether the port is intended or expected to be used for charging mobile phones (e.g. based on labelling, documentation, or provided adapters);

vii) photograph of the port.

e) Measure and observe the following (in the provided units) for the DUT's PV module.

1) Measure the PV module's overall length and width, in centimetres (cm), including the frame.

2) Measure the active solar material's overall area, in square centimetres (cm^2).

IECNORM.COM : Click to view the full PDF of IEC TS 62257-9-5:2016 RLV
Withdrawn

3) Note if the PV module is external or integrated into the DUT's housing.
4) Measure the PV module's cable length, in metres (m), in the case of external PV modules.
5) Note the PV module's solar material (e.g. poly-Si, mono-Si, CIS, amorphous).
6) Note the PV module's encasing (e.g. lamination, glass, epoxy).
7) Describe the quality of workmanship in the PV module's junction box, if present.
8) Note any additional information about the PV module (e.g. number of individual cells).
9) Carefully inspect each PV module under an illumination of not less than 1 000 lux and note any of the following visual defect conditions:
   – cracked, bent, misaligned or torn external surfaces;
   – broken cells;
   – cracked cells;
   – faulty interconnections or joints;
   – cells touching one another or the frame;
   – failure of adhesive bonds;
   – bubbles or delaminations forming a continuous path between a cell and the edge of the module;
   – tacky surfaces of plastic materials;
   – faulty terminations, exposed live electrical parts;
   – any other conditions which could affect performance;
   – (for thin film PV modules) voids in, and visible corrosion of any of the thin film layers of the active circuit.
10) Make note of and photograph the nature and position of any visual defects, cracks, bubbles or delaminations, etc. which could worsen and adversely affect the module performance.
11) Photograph the PV module.

f) Note if the DUT can be turned on while it is being charged with its PV module.
g) Note the DUT's primary form factor (fixed indoor, fixed outdoor, portable separate, portable integrated, or other) and also note any secondary form factors.
h) Note the DUT's expected use(s) (e.g. ambient, torch, task).
i) Provide any general comments regarding the DUT's properties, features, and/or information.

F.4.2 Specifications

F.4.2.1 General

All relevant DUT specifications are recorded for later comparison in testing results. This part of the procedure may be completed on a single sample.

F.4.2.2 Equipment requirements

No equipment is required for this part of the visual screening procedure.

F.4.2.3 Test prerequisites

The DUT should be new, unaltered, and in its original packaging. Read the DUT's box and documentation for instructions on using the DUT. Consult the manufacturer for missing information pertaining to the required observations.

IECNORM.COM : Click to view the full PDF of IEC TS 62257-9-5:2016 RLV
Withdrawn

F.4.2.4 Apparatus

No apparatus is required for this part of the visual screening procedure.

F.4.2.5 Procedure

Examine the DUT's packaging, user's manual, and components for battery, lamp, charge controller, included appliances and PV module specifications. While obtaining the specifications, the DUT should not be opened or otherwise tampered with in any way. The internal inspection of F.4.3 ~~may~~ can reveal more product specifications, which should be included with the specifications from F.4.2 and noted accordingly.

a) When provided, note the following specifications (in the specified units), indicate and photograph the source(s) of each, and comment on any specification discrepancies. Indicate if the specification is not provided but can be ascertained by observation (e.g. battery chemistry and battery nominal voltage).

   1) Battery chemistry (SLA, NiCd, NiMH, Li-Ion, $LiFePO_4$, or specify other).
   2) Rated battery capacity, in milliamp hours (mAh).
   3) Battery nominal voltage, in volts (V).
   4) Lamp type (LED, compact fluorescent, linear fluorescent, incandescent, or specify other).
   5) Lamp driver (constant voltage source, constant current source, pulse width modulation, resistor, or specify other).
   6) Charge controller present (yes/no).
   7) Charge controller deep discharge protection voltage, in volts (V).
   8) Charge controller overcharge protection voltage, in volts (V).
   9) PV module maximum power point power (P_{mpp}), in watts (W).
   10) PV module open circuit voltage (V_{oc}), in volts (V).
   11) PV module short circuit current (I_{sc}), in milliamperes (mA).
   12) PV module maximum power point voltage (V_{mpp}), in volts (V).
   13) PV module maximum power point current (I_{mpp}), in milliamperes (mA).
   14) Included appliances (specify what is included).
   15) Appliance input voltage range (V).
   16) Appliance maximum power usage (W).
   17) Appliance average power usage (W).
   18) Appliance standby power usage (W).
   19) Where available, note basic television specifications – the screen size (inch), TV technology (LCD, LED, Plasma or CRT), antenna type, built-in DVD player, AC power adapter included and built-in FM tuner/radio capabilities.
   20) Where available, basic fan specifications – the fan diameter in millimetres (mm), speed settings, type of stand and ceiling mounting.
   21) Where available, note for any included radio specifications – the radio bands, built-in MP3 player, battery chemistry, battery capacity in ampere hours (Ah), nominal battery voltage in volts (V) and battery run time specified.
   22) Where available, note for any included portable video player specifications – the screen size (inch), DVD player, AC power adapter included, USB inputs, memory card slots, built-in FM tuner/radio capabilities, built-in MP3 player, battery chemistry, battery capacity in ampere hours (Ah), nominal battery voltage in volts (V) and battery run time specified.
   23) Where available, note for any included refrigerator specifications – the refrigerator capacity in litres (L), the freezer capacity in litres (L), the energy use per day in

IECNORM.COM : Click to view the full PDF of IEC TS 62257-9-5:2016 RLV
Withdrawn

watt·hours per day (Wh/day) and the temperature the energy use is specified for in degrees Celsius (°C).

24) Where available, note for any other included appliances any relevant specifications on their use.

b) When provided, record the following run time specifications, in hours (h), indicate and photograph the source(s) of each, and comment on any discrepancies:

1) Note the number of hours of operation on a full battery charge for all lamp settings (full-battery run time) and all appliance uses specified.

2) Note the number of hours of operation on a battery charge from a day of solar charging for all lamp settings (daily solar run time) and all appliance uses specified.

3) Note the number of hours of operation after a specified electromechanical charge period for all lamp settings (electromechanical run time ratio).

4) Note the number of hours of operation after a specified AC/DC adapter charge period for all lamp settings (grid run time).

5) Note and describe any specified run times that do not fit into the previous four categories.

6) Note any claims regarding charging of mobile phones or other devices, including the number of devices, types of devices, energy availability or hours of charging, etc.

c) Where available, note any light output specifications, in lumens (lm), indicate and photograph the source(s) of each, the corresponding lamp setting(s), and comment on any discrepancies.

F.4.3 Functionality and internal inspection

F.4.3.1 General

An internal inspection is performed to assess the electronics and soldering workmanship. The DUT ~~may~~ and included appliances fail the inspection if poor internal workmanship inhibits the DUT and included appliances from properly functioning. This part of the procedure should be completed for every sample being tested.

F.4.3.2 Equipment requirements

The following equipment is required. Equipment shall meet the requirements in Table CC.2.

- Bright task light with good colour rendering ~~(≥ 700 lux and ≥ 85 CRI recommended)~~.
- Miscellaneous hand tools (screwdrivers, wrenches, etc.) to disassemble DUT.
- Camera to document DUT characteristics with particular attention to potential points of failure (e.g. cold solder joints).
- DC voltmeter or multimeter for conducting basic electronic integrity and functionality tests ~~(at least 0,5 % accuracy)~~.
- Optional: DC current clamp meter.

F.4.3.3 Test prerequisites

The DUT and included appliances should be new, unaltered, and in ~~its~~ original packaging. Read the ~~DUT's~~ retail box and documentation for instructions on using the DUT and included appliances. Consult the manufacturer for missing information pertaining to the required observations. If the DUT or appliance instructions require them to be fully charged prior to operation, do so prior to conducting this test.

F.4.3.4 Apparatus

The DUT and included appliances should be positioned under a bright task light for examination.

IECNORM.COM : Click to view the full PDF of IEC TS 62257-9-5:2016 RLV
Withdrawn

F.4.3.5 Procedure

The following steps shall be followed.

a) Check the functionality of the DUT and included appliances before disassembling.

1) Do the DUT and included appliances work as described with provided documentation?

2) Do the DUT and included appliances charge as described with provided documentation? Be sure that any included grid charger properly functions.

3) Do all of the DUT and included appliances' switches and connectors function as they should?

4) Comment on any notable characteristics of the DUT's light output (e.g. glare, colour, inconsistency between samples).

5) Comment on any notable characteristics of the functionality of the DUT's included appliances.

6) Comment on the proper functioning of DUT's indicator lights (such as a charging indicator) and/or informative displays (such as a display showing the battery's state of charge), if applicable.

7) Comment on any faulty operation and provide photographs, if necessary.

8) A DUT is considered to no longer function if any of the following functions fail to work with the battery at the appropriate state of charge:

– one or more included appliance will not turn on;

– any of the light sources, arrays and light points will not turn on;

– the product will not charge via solar, and/or grid, and/or mechanical, as applicable;

– battery is unsafe (leaked fluid, inflated, etc.).

b) Inspect the DUT and included appliances for potential hazards or safety issues, such as:

– bare conductors;

– sharp points and edges that can cut someone (including exposed screws and fasteners with sharp points and edges);

– plugs that could exceed ampacity ratings if improperly used;

– electrical situations that could lead to a fire;

Make note of and photograph any potential hazards or safety issues identified.

c) Disassemble the DUT and included appliances so the following internal observations ~~may~~ can be made.

~~1) Indicate whether the DUT uses cable strain reliefs and, if so, which cables have strain reliefs. Document with photographs.~~

1) Inspect the electronic components' quality and workmanship. ~~Note any poor solder joints, such as cold joints or joints with little solder~~. Document the workmanship with comments and photographs. Record the number of observations of each deficiency listed below for each sample examined:

– soldering: note any poor solder joints, such as cold joints or joints with insufficient or excess solder;

– wiring: note any poor wiring, such as a badly pinched wire;

– fixture: note any poor securing of internal components, such as poor gluing that is likely to fail;

– battery:

- note any battery-related deficiency, such as inflated batteries, fluid leakage, or corrosion of battery terminals. If lithium batteries are inflated or fluid is present, these batteries are dangerous and shall not be used for any additional tests. Dispose of the battery properly.
- note if the battery is adequately fastened, such as with screw mounts;

IECNORM.COM : Click to view the full PDF of IEC TS 62257-9-5:2016 RLV
Withdrawn

- safety: note anything that could result in a safety concern, such as a potential for shorting the product's battery if two bare wires near each other could touch;
- functionality: functional deficiencies include an indicator light or display failing to work, a non-functional accessory (such as extension cable), and an extra port not functioning. Functional deficiencies are not large enough to result in the product no longer functioning according to F.4.3.5 a) 8) , above.

2) Determine the product's total deficiencies score. Sum the number of deficiencies observed between the examined samples for soldering, wiring, fixture, and battery. Sum and triple the number of deficiencies observed between the examined samples for safety and functionality. Add these two sums together and divide by the number of samples examined – this is the total deficiencies score.

3) Determine the workmanship quality using the following guidelines:
   - good: no deficiencies were observed with the samples examined, and all samples being tested continued to function throughout normal use during testing without any hazards or safety issues;
   - fair: deficiencies score is greater than 0 but less than or equal to 1,25, and all of the samples being tested continued to function throughout normal use during testing without any hazards or safety issues;
   - poor: one or more sample being tested discontinued to function throughout normal use during testing or developed one or more hazards or safety issues, or deficiencies score is greater than 1,25.

   The workmanship quality may be reassessed upon completion of the DUT's testing, as samples can stop functioning under normal use during a later test.

4) Indicate whether the DUT and included appliances use cable strain reliefs and, if so, which cables have strain reliefs. Document with photographs.

5) Indicate methods used to secure parts inside the DUT and included appliances (e.g. screws, glue, tape, clamps/straps, or other) and document with photographs.

6) Indicate methods used for securing wire and cable connections (e.g. solder, harness, terminal junction) and document with photographs.

7) Note if the DUT and included appliances have an easily replaceable battery and/or printed circuit board (PCB). The battery and PCB are easily replaceable if they can be interchanged without any tools other than screwdriver(s) (i.e. no soldering or splicing) that are used only for the removal and replacement of screws (i.e. no prying). Note if any instructions are included for replacing the battery and/or PCB.

8) Examine the internal components, especially the batteries, and note any specifications that were not apparent in F.4.2.5.

9) Note if the batteryies ~~has an integrated battery circuit~~ contain any internal circuitry. This type of circuitry ~~is~~ typically consists of a small printed circuit board located beneath a plastic jacket encasing the battery. Document with photographs.

10) Some batteries utilize safety and/or cell balancing circuitry on the DUT's PCB. By this arrangement, the battery requires intelligence from the DUT's PCB for proper charging and/or discharging. Note if the DUT's battery utilizes a safety/cell balancing circuit on the DUT's PCB. This arrangement can be observed as additional wire connections between the battery and the PCB. Consult the manufacturer if uncertain.

    NOTE Additional wire connections between the battery and the PCB can have other functions as well; for example temperature sensing. Voltage measurements of the additional wires can be helpful in assessing their function; voltages on wires added for cell monitoring and/or balancing will be multiples of the cell voltage.

11) Note the DUT and included appliances' overall internal workmanship quality. Document the internal workmanship with descriptions and photographs.

F.5 Reporting

Report the following in the visual screening test report ~~(a sample template is provided in Annex X)~~.

IECNORM.COM : Click to view the full PDF of IEC TS 62257-9-5:2016 RLV
Withdrawn

- Metadata:
  - report name;
  - procedure(s) used;
  - DUT manufacturer;
  - DUT name;
  - DUT model number;
  - name of test laboratory;
  - approving person;
  - date of report approval.
- Manufacturer contact information (e.g. website, email address, phone number, etc.).
- Retail box description, if available.
- User's manual information:
  - included with DUT (yes/no);
  - type (e.g. booklet, pamphlet, sheet);
  - language;
  - comments.
- Proper disposal instructions information, if available.
- Battery replacement instructions, if available.
- Hazard labelling, if available.
- Warranty information, if available:
  - ~~Length~~ duration (months);
  - description of terms and conditions.
- Complete DUT information (e.g. battery unit, lamp units, control unit, appliances):
  - mass (g);
  - list of components included in mass measurement.
- DUT cable information:
  - length of all cables except those used to connect PV modules (m);
  - cable to be used outdoors (yes/no);
  - certification documents provided for cables to be used outdoors (yes/no);
  - description of all cables except those used to connect PV modules.
- DUT component information:
  - length of each component (cm);
  - width of each component (cm);
  - height of each component (cm);
  - number of each component included with DUT;
  - description of each component.
- DUT lamp unit technology information:
  - type of each unique lamp unit variety (e.g. LED, CFL, incandescent.);
  - number of light points in each unique lamp unit variety;
  - number of arrays in each unique lamp unit variety;
  - description of each unique lamp unit variety's technology use.
- Description of DUT arrangement in expected typical use.

IECNORM.COM : Click to view the full PDF of IEC TS 62257-9-5:2016 RLV
Withdrawn

- DUT setting information:
  - name of all individual light output settings;
  - description of each individual light output setting.
- DUT and included appliances materials information:
  - list of all materials used to construct each DUT component (e.g. glass, balsa wood, plastic);
  - description of all DUT components construction materials.
- DUT included appliances indicators information:
  - list of all indicators present on each DUT component (e.g. battery charge indicators);
  - description of all DUT component indicators.
- DUT included appliances features information:
  - list of all features present on each DUT component (e.g. handles, mounting brackets, stand);
  - description of all DUT component features.
- DUT ~~auxiliary~~ accessories included appliances information:
  - radio included (yes/no);
  - mobile phone charging capability (yes/no);
  - descriptions of included appliances;
  - descriptions of other included DUT accessories and connectors.
- DUT charging mechanism information:
  - grid charging supported (yes/no);
  - electromechanical charging supported (yes/no);
  - solar charging supported (yes/no);
  - description of each included charging mechanism.
- DUT DC ports information:
  - number of distinct port types;
  - description of each port type;
  - receptacle type for each port type;
  - number of identical ports of each type;
  - nominal port voltage for each port type;
  - rated maximum port current for each port type;
  - whether each port type is intended or expected to be used for charging mobile phones.
- DUT PV module information:
  - length of each PV module (cm);
  - width of each PV module (cm);
  - active area of each PV module (cm^2);
  - form of each PV module (external or integrated);
  - cable length of each PV module (m);
  - active solar material of each PV module (e.g. mono-Si, amorphous, CIS);
  - encasing of each PV module (e.g. lamination, glass);
  - description of any PV module visual defect conditions;
  - description of the robustness of each PV module;
  - description of PV module junction box workmanship;

IECNORM.COM : Click to view the full PDF of IEC TS 62257-9-5:2016 RLV
Withdrawn

  - other PV module information.
- DUT form factor and use information:
  - DUT's primary form factor (e.g. fixed indoor, fixed outdoor);
  - DUT's secondary form factor(s);
  - DUT's expected use(s) (e.g. ambient, torch, task).
- Overall comments based on the visual inspection.
- Provided DUT specification information, if available:
  - battery chemistry and source of information
  - rated battery capacity (mAh) and source of information;
  - battery nominal voltage (V) and source of information;
  - lamp type(s) and source of information;
  - lamp driver and source of information;
  - presence of charge controller (yes/no) and source of information;
  - charge controller deep discharge protection voltage (V) and source of information;
  - charge controller overcharge protection voltage (V) and source of information;
  - PV module P_{mpp} (W) and source of information;
  - PV module V_{oc} (V) and source of information;
  - PV module I_{sc} (A) and source of information;
  - PV module V_{mpp} (V) and source of information;
  - PV module I_{mpp} (A) and source of information.
- Description of any provided DUT specification discrepancies.
- Provided appliance specification information, if available.
- Description of any provided appliance specification discrepancies.
- Provided DUT run time information, if available:
  - full-battery run time (h) for each setting and source of information;
  - daily solar run time (h) for each setting and source of information;
  - electromechanical charge ratio for each setting and source of information;
  - grid run time (h) for each setting and source of information;
  - claims regarding mobile phone or other device charging abilities;
  - other run time (h) for each setting and source of information.
- Description of any provided run time discrepancies.
- Provided light output (lm) for each setting and source of information.
- Description of any light output discrepancies.
- DUT and appliances function out of box (yes/no).
- All switches and connectors function for each DUT sample and appliances with comments as necessary (yes/no).
- Description of any potential hazards or safety issues.
- Description of cable strain relief methods used and for which connections, if applicable.
- Number of poor solder joints and workmanship deficiencies for each DUT sample and appliances with comments as necessary.
- Total deficiencies score.
- Workmanship quality (good/fair/poor).

IECNORM.COM : Click to view the full PDF of IEC TS 62257-9-5:2016 RLV
Withdrawn

- Means (e.g. screws, glue, tape) used to secure parts in each DUT component (e.g. lamp unit(s), charge controller, PV module(s), appliances).
- General fixture of parts comments.
- Easily replaceable battery and PCB for the DUT and appliances (yes/no).
- Comments on ease of battery and/or PCB replacement.
- Overall description of internal workmanship.
- Figures:
  - properties, features, and information photographs;
  - specifications photographs;
  - functionality and internal inspection photographs.

Withdrawn
IECNORM.COM : Click to view the full PDF of IEC TS 62257-9-5:2016 RLV

Annex G
(normative)

Sample preparation

G.1 Background

The product sample shall be prepared before starting the tests. ~~The preparation includes breaking the connections between the product's battery and circuit in order to facilitate charging the product, powering the product with a laboratory power supply, as well as taking measurements.~~ The preparation includes configuring the product to allow connection with a laboratory power supply, as well as taking measurements. For DUTs with multi-cell lithium battery packs, the preparation also includes charging the product.

G.2 Test outcomes

There are no sample preparation outcomes.

G.3 Related tests

The sample preparation procedures shall be performed on all DUTs prior to conducting the light output test (Annex I), lumen maintenance test (Annex J), battery test (Annex K), full-battery run time test (Annex M), grid charge test (Annex O), electromechanical charge test (Annex P), solar charge test (Annex R), charge controller behaviour test (Annex S), light distribution test (Annex T), battery durability test (Annex BB), protection tests (Annex DD), assessment of DC ports (Annex EE), and appliance tests (Annex FF).

G.4 Procedure

G.4.1 General

The DUT is ~~rewired~~ configured in order to make measurements of current and voltage during selected tests, charge the DUT's battery via a battery analyser, and simulate a specified battery voltage during selected tests with a laboratory power supply. In some cases, this will mean selecting and attaching the correct plug and receptacle components. In other cases, the DUT will need to be modified, by cutting wires and/or drilling holes, to allow electrical connections. When possible, the testing laboratory shall use all cables and connectors that are provided with the DUT and shall configure the system according to product instructions and in way consistent with the normal use of the product. Any modifications shall be kept to a minimum. Additional configuration information can also be found in Annex H and Figure H.1.

G.4.2 Equipment requirements

The following equipment ~~is required~~ and supplies, or their equivalent, are required. Equipment and supplies shall meet the requirements in Table CC.2.

- ~~Wire (0,52 mm^2 or thicker) in four different colours.~~
- Plugs and receptacles (e.g. pin-and-socket connectors) that connect to the DUT electrical ports to allow the use of a laboratory power supply and battery analyser with the DUT appliances.
- Insulated stranded copper wire. The conductor size shall be 0,75 mm^2 or thicker; for many products, it is necessary to use thicker wire to avoid introducing excessive voltage drop. The required conductor size depends on the wire length, the maximum current, and the sensitivity of the product to voltage drop; in all cases, the wire size shall be sufficient to

IECNORM.COM : Click to view the full PDF of IEC TS 62257-9-5:2016 RLV
Withdrawn

avoid significantly affecting the behaviour of the DUT. Recommended minimum wire sizes are given in Table G.1. It is recommended to use four different colours.

- Wire cutters.
- Wire strippers.
- Soldering iron and solder.
- Heat-shrink tubing and heat gun~~, or electrical tape~~.
- Screwdrivers and/or other appropriate tools for opening the DUT.
- Optional for DUTs with multi-cell lithium battery packs: DC power supply.
- Optional: DC current clamp meter.
- ~~May be required depending on the DUT~~ In some cases: a power drill with an appropriately sized drill bit to make a hole in the DUT's enclosure to fit four extension wires.
- ~~Optional: connectors (e.g., Molex)~~

Table G.1 – Recommended minimum conductor sizes for copper wire

Expected maximum current A	Minimum wire thickness mm^2	Minimum wire thickness (American wire gauge)
≤ 2,0	0,75	--
≤ 2,2	0,82	18
≤ 3,5	1,31	16
≤ 4,0	1,50	--
≤ 5,5	2,08	14
≤ 6,7	2,50	--
≤ 8,8	3,31	12
≤ 10,7	4,00	--
≤ 14,0	5,26	10

G.4.3 Test prerequisites

The DUT's visual screening shall be completed prior to performing the sample preparation procedures.

G.4.4 Procedure

The following steps shall be followed.

~~a) Open the DUT, without incurring damage, such that its battery is exposed.~~

~~b) Identify the positive and negative terminals or leads on the DUT's battery.~~

a) For DUTs with multi-cell lithium battery packs, fully charge the product using the DUTs charging circuitry to ensure the DUT has been given the opportunity to balance the cells of its battery pack. Use one of the two following options.

- With the DUT configured for charging (e.g. solar module connected to main unit), face the DUT's solar module towards the sun until the DUT reaches a full charge. Be sure to protect the DUT from water ingress.
- For locations with minimal sun, charge the DUT using a power supply. Set the power supply to the DUT's rated maximum power-point voltage and current. For DUTs with separate solar modules, use a severed PV connector to deliver the power to the DUT's PV socket. For DUTs with integrated solar modules, open the DUT to access and sever the leads between the solar module and electronics to deliver the power through

IECNORM.COM : Click to view the full PDF of IEC TS 62257-9-5:2016 RLV
Withdrawn

the DUT's electronics. If the DUT's maximum power-point voltage and current values are not rated, contact the DUT manufacturer to obtain the values.

To determine when the DUT is fully charged, the lab may use the DUT's instructions or check that current no longer enters the DUT's battery pack with a current clamp meter when the solar module is exposed to sun or power supply is providing power.

b) Identify the DUT's system components and appliances and determine the method of electrical connections between system components.

c) Modify the DUT to electrically isolate the battery from the DUT electronics. This will allow the battery to be tested and will also allow the DUT electronics and ports to be powered from a laboratory power supply.

1) With wire cutters, cut the positive and negative wires individually where the DUT's battery connects with the rest of the DUT circuit. ~~Electric shock can occur if the wires are cut simultaneously.~~ To avoid a short circuit, which could result in personal injury, fire, or explosion, do not cut the wires simultaneously. In some cases, ~~a third~~ additional wires ~~is~~ are attached between the DUT's battery and circuit for battery temperature monitoring and/or cell balancing – do not cut ~~this~~ these wires. Some batteries have two wires connected to each battery terminal – keep the wires attached to each terminal together and treat them as one wire end for the remainder of the procedure.

2) Extend the four wire ends (two connected to the battery terminals, two connected to ~~where the original battery terminal wires interfaced with~~ the DUT's PCB or other electronics) by soldering on additional wires. Make the wire extensions long enough to be extended approximately 6 cm outside the DUT's enclosure. To avoid electric shock, keep the battery positive and negative extensions separated. Cover the wire connections with heat-shrink tubing once soldered. To minimize voltage drop, the conductor size of the extension wires added in this step shall be ≥ 0,75 mm^2 (see recommendations in Table G.1) and equal to or larger than the existing DUT battery supply wires. Wire extensions shall be kept as short as possible. The laboratory shall monitor the behaviour of the DUT to ensure that modifications do not significantly change the DUT's performance. Changes in performance can include changes to the DUT's power consumption, output, or any other function that is substantially different than the function of the unaltered sample.

NOTE In the American wire gauge (AWG) system, 18 AWG (0,823 mm^2) is the smallest conductor size meeting this requirement.

3) Close the DUT such that the wires ~~may~~ can extend outside the DUT's enclosure without being pinched.

Some products are designed with openings in their enclosures such that the wires ~~may~~ can fit through these openings without physically changing the DUT's enclosure.

Some products do not have openings for wire extensions to fit through, in which case a hole shall be drilled into the side of the DUT's enclosure. A drill bit with a diameter slightly greater than the combined diameter of all four extension wires should be used. Choose a location on the DUT's enclosure to minimize the extension wire length and minimize changes to the DUT's enclosure. Be sure that the extension wires do not interfere with the DUT's light output.

Optionally, attach ~~optional~~ connectors (e.g. ~~Molex~~ pin-and-socket connectors) to the ends of the extension wires for easy use during testing. Attach the ~~two~~ battery positive and negative extension wires in one half of the connector pair and the ~~other two mating~~ DUT power supply lead wires in the other half of the connector pair. If no connectors are used, be sure to keep the battery positive and negative extensions separate when bare to avoid ~~electrical shock~~ short-circuiting the battery. Covering the ends of the wires with electrical tape is one method to keep the extensions separate.

The full-battery run time test (Annex M) and charge controller behaviour test (Annex S) impose limits on the total series resistance of the measurement apparatus. To meet these requirements, the use of connectors, soldered connections, or screw terminals is recommended.

IECNORM.COM : Click to view the full PDF of IEC TS 62257-9-5:2016 RLV
Withdrawn

4) To ensure the DUT still works after it has been rewired, connect the wire pairs (with connectors or electrical tape) so the original, unaltered circuit is replicated and turn the DUT on. If the DUT does not turn on, check that the wires are connected correctly and that the solder joints connecting wires are good. Some products require having their PV modules attached with light shining on the PV module to get the product to turn on; afterwards the PV module ~~may~~ can be removed and the product will continue working until its circuit is broken again.

d) (optional) In some situations, it is acceptable for a test lab to supply a regulated voltage from a power supply directly to an appliance plug or wire end instead of supplying power to the DUT power control unit. This method shall be used only if the appliance is normally supplied power by a voltage-regulated port (constant voltage). Built-in or permanently connected appliances as defined by EE.4.2.5 f) cannot be tested by this procedure. If the test lab is uncertain about the voltage regulation of the port, this procedure shall not be used; instead, the lab shall use b) above.

1) Identify the positive and negative terminals or leads on the DUT's plug and receptacle connectors. This can be done by checking DUT instructions or by measuring the voltage polarities on the connector terminals with the DUT turned ON.

2) Configure plug and receptacle components to mate with the DUT system components and allow the use of a laboratory power supply (to power the appliances) and a battery analyser (to test the battery(-ies)). In cases where suitable plug and receptacles cannot be found, the DUT may be modified by cutting off connectors and/or opening DUT enclosures and proceeding with the DUT modifications outlined above. When possible, use the cables and connector components that are provided with the DUT and intended for normal operation.

G.4.5 Calculations

No calculations are required with the sample preparation procedures.

G.5 Reporting

No reporting is required with the sample preparation procedures.

IECNORM.COM : Click to view the full PDF of IEC TS 62257-9-5:2016 RLV
Withdrawn

Annex H
(normative)

Power supply setup procedure

H.1 Background

Several of the photometric test procedures replace the battery with an external laboratory (bench) power supply to provide electrical power to the DUT for the duration of the test. Annex H specifies the power supply equipment requirements and setup procedure for these tests.

In order to correctly simulate the battery and provide the DUT accurate direct current (DC) power, the power supply shall be configured properly to eliminate errors that can occur from:

- voltage drops from the resistance of the lead wires, and
- electronic noise in the lead wires from either the DUT or the test environment.

These errors can (in most cases) be eliminated with a 4-wire test configuration and input filter capacitors.

H.2 Test outcomes

The test outcome of the power supply setup procedure is listed in Table H.1.

Table H.1 – Power supply setup test outcome

Metric	Reporting units	Related aspects	Remarks
Standard operating voltage	volts	n/a	Used when a typical battery voltage during discharge is needed.

H.3 Related tests

Annex H is related to the light output test (Annex I), the lumen maintenance test (Annex J), the solar charge test (Annex R), the charge controller behaviour test (Annex S), and the light distribution test (Annex T). In some unusual cases (battery types other than lead-acid, NiMH, lithium iron phosphate, or other lithium-ion), it is necessary to perform the battery test (Annex K) in order to determine the standard operating voltage in H.5.2.

H.4 Equipment requirements

The DC power supply shall be capable of delivering a stable, accurate DC input to the DUT. The power supply should have a voltage readout resolution of at least 0,01 V and a current readout resolution of at least 0,001 A. The voltage applied to the DUT should be regulated to within ±0,2 % during photometric measurements, charge controller tests, and solar charging tests and ±3 % for the duration of lumen maintenance tests. Equipment shall meet the requirements in Table CC.2.

Some test configurations may use power supplies without voltage and current readouts capable of measuring voltage and current values ~~according to Table H.1~~. For example, a single power supply may be used to run concurrent lifetime tests on multiple DUT's (the DUT's are run in parallel from a single DC voltage rail). For these configurations, voltage

IECNORM.COM : Click to view the full PDF of IEC TS 62257-9-5:2016 RLV
Withdrawn

measurements may be made at each DUT input using a voltmeter or multimeter and current measurements may be made using a voltage drop measurement on a series shunt resistor using Ohm's law.

H.5 Setup procedure for photometric measurements and lumen maintenance tests

H.5.1 Test setup

The following steps shall be followed.

a) The power supply and DUT are configured according to Figure H.1. ~~As an option,~~ Input filter capacitors ~~may~~ shall be placed at the device input according to H.5.5.

b) The voltage level is set according to H.5.2 and measured according to H.5.4.

c) The DUT is powered on and allowed to stabilize for ≥ 20 min according to H.5.3.

d) Tests are performed on the DUT.

e) During testing, monitor the DUT for erratic behaviour that ~~may~~ could indicate a problem with the test setup~~. This may include~~, including light output flickering, voltage and current instability, and difficulty in device start-up.

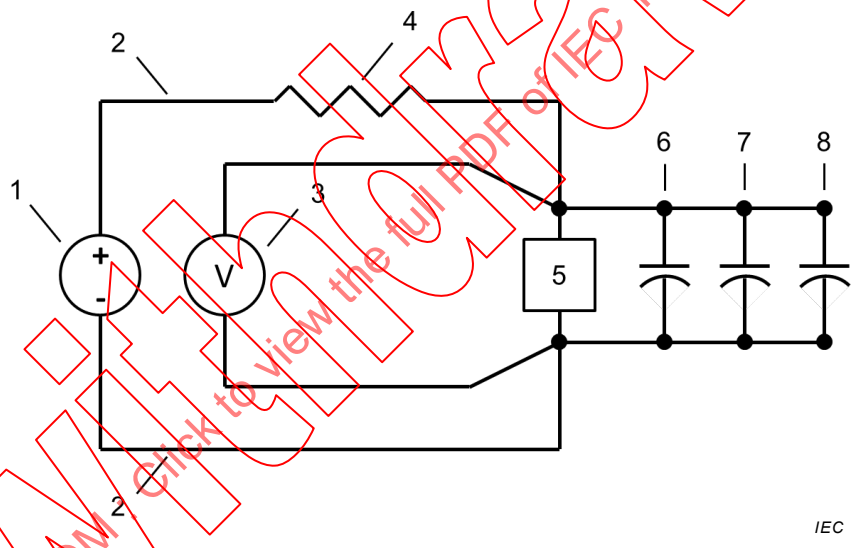

Key

1 DC power supply
2 Lead wire
3 Voltage sense
4 Series shunt resistor (optional)
5 DUT
6 1 μF capacitor
7 10 μF capacitor
8 100 μF capacitor

Figure H.1 – 4-wire test configuration with input filter capacitors

H.5.2 DC voltage and current levels

The constant DC voltage level for testing a product sample is based on the test requirements and battery characteristics.

~~For light output and distribution tests, the average operating voltage (corresponding to the voltage at the average light output operating point found during the full battery run time test,~~

IECNORM.COM : Click to view the full PDF of IEC TS 62257-9-5:2016 RLV
Withdrawn

~~Annex M) is used to set the drive voltage for a DUT. For the lumen maintenance test, a standard operating voltage is used.~~

When supplying power with a laboratory power supply to the DUT power control unit, either the average operating voltage (corresponding to the voltage at the average light output operating point found during the full-battery run time test, Annex M) or the standard operating voltage (Table H.2) is used. This simulates the DUT's battery voltage. The standard operating voltage can be more appropriate for products with multiple lighting appliances, in which the typical operating point determined in the full-battery run time test is less representative of the full variety of use conditions. The standard operating voltage is also useful for the lumen maintenance test (Annex J), in which it is often impractical for laboratories to drive multiple samples at different voltages.

When supplying power with a laboratory power supply directly to a light point (and not using the DUT power control unit), the typical port voltage as determined in EE.4.4 is used. This simulates the DUT's port voltage for that appliance.

The standard operating voltage depends on the type, configuration and number of cells of the battery pack. This is typically provided by the manufacturer but may be determined by testing the discharge profile (Annex K) and inspecting the battery.

The standard operating voltages for several battery chemistries are listed in Table H.2. For unknown or new types of batteries, it is possible to estimate a standard operating voltage using ~~the typical operating point voltage~~ the average voltage during ~~a full-battery run time test (Annex M)~~ the final discharge cycle in the battery capacity test (Annex K).

Table H.2 – Standard operating voltage for several common battery types

Battery type	Standard operating voltage V/cell
~~Sealed~~ Valve-regulated lead-acid	2,05
NiMH ~~and NiCd~~	1,25
Lithium iron phosphate	3,2
Other lithium ion	3,7
Other battery chemistry	Use a typical discharge voltage as determined from manufacturer-provided battery specifications or the battery test (Annex K).

During testing, some DUTs ~~may~~ do not start up at the desired voltage and ~~may~~ require an input slightly greater than the desired battery voltage. In this case, incrementally increase the power supply voltage by 0,05 V until the DUT is operational at the desired light setting. After start up, reduce the voltage back to the desired battery voltage and allow the DUT to stabilize. If the DUT will not remain on when the voltage is reduced, repeat this step and run the DUT as close to the desired battery voltage as possible, making note of the issue.

The current level of a DUT powered with an external power supply should be at or near the current level measured in the full-battery run time test for the desired setting (see M.4.2.5). Variations greater than 5 % ~~may~~ can indicate a problem with the power supply setup and should be noted in the test report.

H.5.3 Stabilization period

A DUT shall be allowed to stabilize (warm up) before light output measurements are made. There are two approved stabilization procedures in Annex H.

a) The DUT is powered on and allowed to stabilize for 20 min.

IECNORM.COM : Click to view the full PDF of IEC TS 62257-9-5:2016 RLV

b) The DUT is powered on and is considered stable when three consecutive output measurements, taken 15 min apart, have a variation of ≤ 0,5 % (IES LM-79-08).

In order to facilitate testing of multiple samples, 20 min is specified as the minimum stabilization time and is adequate for most products. Longer times ~~may~~ can be necessary for DUT's with large heat sinks or high-powered LEDs. Voltage, current, and light output for a DUT should be monitored to determine if 20 min is an adequate stabilization time. If a longer stabilization time is necessary, the IES LM-79-08 procedure may be used to determine the stabilization time for a single DUT sample, and this time may then be used to test additional DUT samples of the same type.

H.5.4 4-wire power supply measurements

Current carrying lead wires used to provide power to the DUT should be appropriately sized and as short as possible, and shall be separate from the wires used to measure the device voltage (Figure H.1). This is typically referred to as a 4-wire test measurement, and eliminates the voltage drop associated with the resistance of the test leads because very little electric current is carried in the voltage sensing wires. Many power supplies are equipped to handle this measurement automatically (also known as remote sensing), although test personnel may make corrections by adjusting the sense voltage manually.

H.5.5 Filtering electronic noise

Electromagnetic interference (EMI) generated by the DUT or the test environment ~~may~~ can interfere with voltage and current measurements. This can occur from switching power supplies found in some electronic devices and is exacerbated by using long lead wires from the power supply to the DUT. Problems with EMI will typically cause input voltage and current instability, and often can result in light output variation in the DUT.

~~In cases where EMI problems are known or suspected,~~ Input capacitors ~~should~~ shall be placed at the DUT input connections, between supply positive and negative leads, as close to the device as possible. The capacitors should be ceramic chip or tantalum types and have 1 μF, 10 μF, and 100 μF values. These three capacitor values, used in parallel, will effectively mitigate most EMI problems.

H.5.6 Troubleshooting

If the DUT will not turn on after replacing its battery with a power supply, try the following steps, in order. If the DUT turns off or drops to a lower light output setting after a period of time, try the following steps starting with step b). If possible, consult the product manufacturer to ensure that any troubleshooting steps taken will not damage the product.

a) Follow the above guidelines in H.5.1 for replacing the DUT's battery with a power supply. If the product is solar-charged, plug in the DUT's solar module into its charging socket (plugging is not required for integrated DUTs) and shine a bright light very close to the solar module. If the light does not turn on, try cycling the DUT's on/off switch. After the light turns on, the solar module can be removed.

b) Follow the above guidelines in H.5.1 for replacing the DUT's battery with a power supply. Use an additional power supply to provide a voltage-controlled input to the DUT's solar module socket (for products with external solar modules) at the solar module's maximum power point voltage (V_{mpp}) and maximum power point (I_{mpp}). (In some cases, it is necessary to obtain the appropriate voltage and current values from the product manufacturer.) The connector from the DUT's solar module shall be cut, stripped, and used to supply the simulated solar power to the DUT's solar module socket. For products with integrated solar modules, the wires connecting the solar module to the PCB shall be cut, and the wire leads still connected to the PCB shall be stripped. The voltage-controlled input shall be supplied to these leads. In some cases, it is necessary to supply the voltage-controlled input to the DUT's solar module socket (or solar PCB leads for products with integrated solar modules) for the duration of the test.

IECNORM.COM : Click to view the full PDF of IEC TS 62257-9-5:2016 RLV
Withdrawn

c) Instead of replacing the DUT's battery with a power supply, leave the battery connected within the DUT. Connect a "jumper" between the DUT's battery and electronics so that the battery voltage and current can be measured during the test. Also use an additional power supply to provide a voltage-controlled input to the DUT's solar module socket at the solar module's maximum power point voltage (V_{mpp}) and maximum power point current (I_{mpp}). (In some cases, it is necessary to obtain the appropriate voltage and current values from the product manufacturer.) The connector from the DUT's solar module shall be cut, stripped, and used to supply the simulated solar power to the DUT's solar module socket. For products with integrated solar modules, the wires connecting the solar module to the PCB shall be cut, and the wire leads still connected to the PCB shall be stripped. The voltage-controlled input shall be supplied to these leads. In some cases, it is necessary to supply the voltage-controlled input to the DUT's solar module socket (or solar PCB leads for products with integrated solar modules) for the duration of the test.

d) If the product has a cell balancing or protection circuit that is external to the battery (i.e. on a PCB external to the battery), as determined during visual screening (F.4.3.5), that was disconnected between the battery and PCB, then incorporate resistors between each of the DUT's battery cell voltage inputs to provide the required voltages and allow the product to turn on. If possible, communicate with the product manufacturer to determine the proper resistor sizing, or if an alternative option is more appropriate. If cell balancing wires extend from the battery, these wires may be used to solder on the resistors. Only proceed with this option if safe, at the tester's discretion. The test lab shall ensure that the current drawn by the resistors does not result in an error of more than 1 % in any current measurement. In some cases, more complex circuitry is necessary to supply stable voltages to the DUT under all operating conditions.

H.6 Reporting

The voltage and current for tests using an external power supply ~~should~~ shall be reported according to Table H.3.

Table H.3 – Voltage and current reporting requirements

	Notes
DC voltage	Regulated to within ±0,2 % during photometric measurements and ±3 % for the duration of lifetime tests
DC current	Measured using the power supply readout or series shunt resistor. Readout resolution should be ≥ 0,001 mA

IECNORM.COM : Click to view the full PDF of IEC TS 62257-9-5:2016 RLV
Withdrawn

Annex I
(normative)

Light output test

I.1 Background

The light output of a solar LED light is a key parameter as products that do not provide a sufficient amount of light have limited value.

Light output measurements (total luminous flux or lumen output) typically require the use of an integrating sphere or goniophotometer. An additional luminous flux measurement technique, referred to as the multi-plane method, involves conducting illuminance measurements on six planes that define a "box" around a test product and uses these measurements to calculate luminous flux. The multi-plane method is unique to IEC 62257 and is described in I.4.3.

Laboratories may measure total luminous flux using an integrating sphere, goniophotometer, or the multi-plane method.

The light output of all lighting appliances, with at least a 10 lumen output, supplied with the DUT shall be measured individually. If more than one identical lighting appliance is included with the DUT kit, only one of each type of identical lighting appliances shall be measured.

I.2 Test outcomes

The test outcomes of the light output test are listed in Table I.1.

Table I.1 – Light output test outcomes

Metric	Reporting units	Related aspects	Notes
Luminous flux	Lumens (lm)	4.2.9.1 Average luminous flux output	Measured using a DC power supply, light sensor, and integrating sphere or goniophotometer (or using a multi-plane measurement).
Correlated colour temperature (CCT)	Kelvin (K)	4.2.9.4 Colour characteristics	Measured using equipment capable of characterizing spectral distribution
Colour rendering index (CRI)	0-100 (unitless)	4.2.9.4 Colour characteristics	Measured using equipment capable of characterizing spectral distribution

I.3 Related tests

This annex is related to the full-battery run time test (Annex M) and the light distribution test (Annex T).

The light output test allows several alternatives for determining light output. The multi-plane method described in I.4.3 and a goniophotometer may be used to generate information on the distribution of the device (needed for Annex T) as well as information on light output. When these methods are utilized, data may also be used by Annex T to calculate illuminance on a plane, illuminance about an axis, and/or full width half maximum (FWHM) angles as described in T.4.3.6.

IECNORM.COM : Click to view the full PDF of IEC TS 62257-9-5:2016 RLV

I.4 Luminous flux measurement techniques

I.4.1 General

The luminous flux of all of the lighting appliances supplied with the DUT shall be measured. If more than one identical appliance is included with the DUT kit, only one of each set of identical appliances should be tested.

The following steps shall be followed.

~~a) Prerequisite: Find the average operating voltage as described in Annex M.~~

a) Determine the method of supplying power to the lighting appliance(s). The appliance shall be connected either to a port on the DUT's power control unit or directly to a laboratory power supply. See Annex H for additional information on selecting an appropriate method to power the lighting appliance.

b) Prepare the test sample for lighting evaluation as described in Annex G. Set up a power supply to drive the DUT as described in Annex H. ~~Note that each test sample will have a unique average operating voltage.~~ Measurements shall be taken in a conditioned space such that the air temperature is 24 °C ± 3 °C.

~~c) The DUT shall operate undisturbed for at least 20 min before any flux measurements are made.~~

c) When connecting a lighting appliance to a port on the DUT's power control unit, use the average operating voltage (Annex M) or standard operating voltage (Annex H) to supply power from a laboratory power supply to the power control unit. The standard operating voltage can be more appropriate for products with multiple lighting appliances, in which the typical operating point determined in the full-battery run time test is less representative of the full variety of use conditions. All of the lighting appliances in the DUT kit shall be connected, powered on, and set at their highest output setting, unless otherwise specified in the product specification or requested by the client. Additional settings may be tested at the laboratory's discretion.

When a DUT has multiple lights, these lighting appliances should be tested individually (for example, one lighting appliance is placed inside an integrating sphere and the others are powered on but left outside the sphere during the test). Though all lighting appliances are connected and powered on during the test, for DUTs with multiple identical lighting appliances, it is only necessary to measure one of each type of identical lighting appliances.

EXAMPLE The DUT includes three different types of lighting appliances (e.g. a tube light, four ambient light points and two more focused light points). In this case, three of the seven lighting appliances would be measured during testing – one of each lighting appliance type.

d) When connecting a lighting appliance directly to a laboratory power supply, use the typical port voltage (Annex EE) for the port to which the appliance is normally connected. The DUT shall be powered on and set to the highest output setting. It is only necessary to measure one of each type of identical lighting appliance.

All DUT luminous flux measurements will be performed with the DUT(s) set to the highest output setting. Additional flux measurements shall be made to verify truth in advertising statements from the manufacturer when other light settings are advertised, or as required in the product specification.

e) Allow the DUT to stabilize according to H.5.3.

f) Record the voltage and current draw by the DUT at the DUT's input connector.

g) When powering DUT lighting appliances with a product's power control unit, record the voltage and current at the power control unit's battery input connector.

I.4.2 Luminous flux measurements with an integrating sphere or goniophotometer

Refer to the following standard test methods for the measurement of luminous flux with an integrating sphere or goniophotometer:

IECNORM.COM : Click to view the full PDF of IEC TS 62257-9-5:2016 RLV
Withdrawn

- CIE 084~~: The measurement of luminous flux~~;
- CIE 127~~: Measurement of LEDs~~;
- IESNA LM-78-07; ~~IESNA approved method for total luminous flux measurement of lamps using an integrating sphere photometer~~
- IESNA LM-79-08~~: Electrical and photometric measurement of solid state lighting products~~.

I.4.3 Luminous flux measurements using the multi-plane method

I.4.3.1 General

1 lux is equal to 1 lumen per square metre. This relationship is used in this method to obtain total lumen output by determining the average illuminance (lux) on a 1 m^2 surface at six surfaces (left, right, front, back, top, and bottom) that completely encompass the DUT and summing up the zonal lumen output from each of these six surfaces. This method is similar conceptually to the method by which lumen output is calculated by summing zonal lumen output for goniophotometric measurements.

When connecting a lighting appliance to a port on the DUT's power control unit, use the average operating voltage (Annex M) or standard operating voltage to supply power from a laboratory power supply to the power control unit. The standard operating voltage can be more appropriate for products with multiple lighting appliances, in which the typical operating point determined in the full-battery run time test is less representative of the full variety of use conditions. All of the lighting appliances in the DUT kit shall be connected, powered on, and set at their highest output setting. Only one lighting appliance can be tested at a time with this procedure. Other lighting appliances shall be covered or otherwise arranged so that no light from these appliances reaches the measurement plane.

Though all lighting appliances are connected and powered on during the test, for DUTs with multiple identical lighting appliances, it is only necessary to measure one of each type of identical lighting appliance.

EXAMPLE The DUT includes three different types of lighting appliances (e.g. a tube light, four ambient light points, and two more focused light points). In this case, three of the seven lighting appliances would be measured during testing – one of each lighting appliance type.

If the lighting appliance is to be connected directly to a laboratory power supply as described in G.4.4 d), rather than to a port on the DUT's power control unit, use the typical port voltage (Annex EE) for the port to which the appliance is normally connected. The DUT shall be powered on and set to the highest output setting. Additional settings may be measured at the discretion of the test laboratory to verify truth in advertising statements from the manufacturer when other light settings are advertised, or as required in the product specification. It is only necessary to measure one of each type of identical lighting appliance.

I.4.3.2 Equipment requirements

The following equipment is required. Equipment shall meet the requirements in Table CC.2.

- Illuminance meter ~~(cosine-corrected, ≤ 0,1 lux precision, V(λ) corrected)~~.
- Multi-plane test apparatus (described below).
- DC power supply.
- DC voltmeter or multimeter ~~(at least 0,5 % accuracy)~~.
- DC ammeter ~~(at least 1 % accuracy)~~.

I.4.3.3 Test prerequisites

See general procedure (I.4.1).

IECNORM.COM : Click to view the full PDF of IEC TS 62257-9-5:2016 RLV
Withdrawn

I.4.3.4 Apparatus

The test requires a lighting distribution grid surface that can hold an illuminance meter over a 1 m^2 surface with 0,1 m spacing – an 11 × 11 grid with 121 points (Figure I.1). The 81 interior points each represent 100 cm^2 of surface area, the 36 edge points each represent 50 cm^2 of surface area, and the four corner points represent 25 cm^2 of surface area. The light is fixed 0,5 m away from the centre of the grid surface (the 0,5 m is measured from the centre of the light source itself).

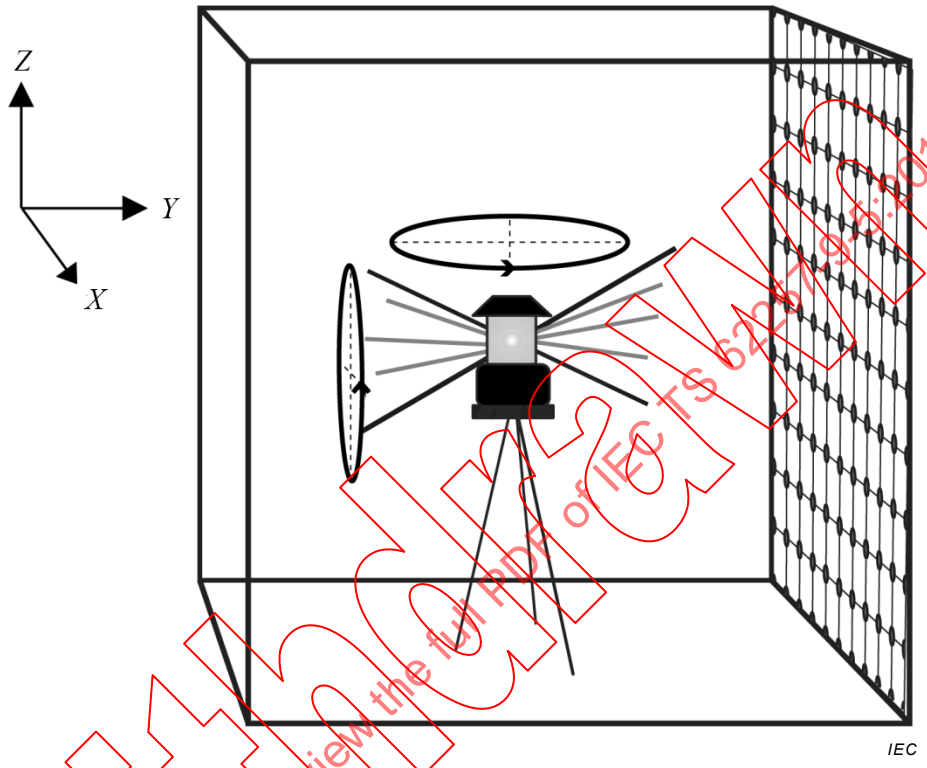

Figure I.1 – Conceptual schematic of the light output test setup, including the 11 × 11 grid, Cartesian coordinate axes for rotation reference, and the DUT

I.4.3.5 Procedure

In general, the light shall be situated so the first surface that is measured is the one that contains the peak of the overall light distribution. Subsequently, the light is carefully rotated to capture the other five surface measurements. Three of the remaining five positions are achieved by rotating the lamp exactly 90° about the vertical (Z) axis between each measurement. The remaining two positions are achieved by rotating the light about the horizontal (X) axis (see Figure I.1). After every rotation, the centre point of the light source should be exactly 0,5 m from the ~~light~~ illuminance meter's sensor when it is placed in the centre of the measurement plane. ~~A rotary disk may be helpful for some lighting products; otherwise, a clamping system shall be used.~~ The DUT shall be mounted using a turntable (rotating platform) or a clamping system.

Be sure no stray light hits the photometer and no reflections from other surfaces in the room interfere with the readings. Installing a black curtain around the test setup and having the test operator wear all black are recommended.

The steps shall be followed.

a) Arrange the room and prepare the DUT, ensuring the stand can hold the DUT steadily and enables precise rotation.

IECNORM.COM : Click to view the full PDF of IEC TS 62257-9-5:2016 RLV
Withdrawn

b) Set the voltage of an external power supply such that the voltage at the product is ~~at~~ equal to the average operating voltage of the battery (Annex M) and operate the DUT for at least 20 min before the first measurement is taken. Follow power supply guidelines in the power supply set up procedure (Annex H).

c) Position the DUT such that the centre of its light ~~output~~ source is 0,5 m away from the centre of the grid surface as shown in Figure I.1.

d) The centre of the grid surface shall read the highest light output provided by the DUT at a 0,5 m distance.

e) Measure illuminance levels at every 0,1 m distance on the grid surface, with the illuminance meter co-planar to the measurement grid (not normal to the light source).

f) Measure illuminance levels for the grid points that read a lux value greater than the resolution of the ~~light~~ illuminance meter and greater than 0,2 % of the maximum lux reading from the first surface measured.

g) Rotate the DUT 90° clockwise, repositioning the DUT, if necessary, such that the centre point of the light output is exactly 0,5 m from the ~~light~~ illuminance meter's sensor. It is also permissible to rotate the measurement grid about the DUT. Repeat steps d) through g) for the two remaining side faces until reaching the DUT's initial position.

h) Tilt the DUT 90° down (about the X axis) and reposition the DUT, if necessary, such that the centre point of the light output is exactly 0,5 m from the ~~light~~ illuminance meter's sensor. It is also permissible to rotate the measurement grid about the DUT.

i) Measure illuminance levels for the grid points that read a lux value greater than the resolution of the ~~light~~ illuminance meter and greater than 0,2 % of the maximum lux reading from the first surface measured.

j) Tilt the DUT 180° up (about the X axis) and reposition the DUT, if necessary, such that the centre point of the light output is exactly 0,5 m from the ~~light~~ illuminance meter's sensor. It is also permissible to rotate the measurement grid about the DUT.

k) Measure illuminance levels for the grid points that read a lux value greater than the resolution of the ~~light~~ illuminance meter and greater than 0,2 % of the maximum lux reading from the first surface measured.

I.4.3.6 Calculations

The illuminance data ~~may be~~ are used to estimate the DUT's luminous flux output. The six measured sides have virtually enclosed the DUT's light output within a box. All the illuminance values over the virtual surfaces will be integrated to calculate an estimate for luminous flux.

a) Estimate the luminous flux incident on the first measured surface: multiply the illuminance values by the appropriate area each one represents (0,01 m^2 for interior points, 0,005 m^2 for edge points, and 0,0025 m^2 for corner points) to obtain the luminous flux (lm) represented by each illuminance measurement.

b) Sum the luminous flux measurements over the entire surface.

c) Repeat step a) to calculate the luminous flux for the remaining five sides.

d) Total the luminous flux estimates over all six sides to obtain an estimated constant-voltage total luminous flux emitted from the DUT.

I.5 Correlated colour temperature (CCT) measurement

Measurement of correlated colour temperature shall be made in accordance ~~to IEC 60081, Annex D (which references~~ with CIE 15:2004~~)~~.

I.6 Colour rendering index (CRI) measurement

Measurement of colour rendering index (R_a) shall be made in accordance to CIE 13.3 and CIE 177.

IECNORM.COM : Click to view the full PDF of IEC TS 62257-9-5:2016 RLV
Withdrawn

I.7 Reporting

Report the following in the light output test report ~~(a sample template is provided in Annex X)~~.

- Metadata:
  - report name;
  - procedure(s) used;
  - DUT manufacturer;
  - DUT name;
  - DUT model number;
  - DUT setting;
  - test room temperature (°C);
  - name of test laboratory;
  - approving person;
  - date of report approval.
- Results for tested DUT aspects for samples 1 through n:
  - drive current (A);
  - drive voltage (V);
  - stabilisation time (min);
  - total constant-voltage luminous flux (lm);
  - correlated colour temperature;
  - colour rendering index.
- Average of n sample results for each DUT aspect tested.
- Coefficient of variation of n sample results for each DUT aspect tested (%).
- DUT's rating for aspects tested, if available.
- Deviation of the average result from the DUT's rating for each aspect tested, if available (%).
- Comments:
  - individual comments, as necessary, for samples 1 through n;
  - overall comments, as necessary, for collective set of samples 1 through n.

IECNORM.COM : Click to view the full PDF of IEC TS 62257-9-5:2016 RLV
Withdrawn

Annex J
(normative)

Lumen maintenance test

J.1 Background

An important performance metric for LED lights is consistent luminous flux over the product's lifetime. The lifetime of LEDs is strongly influenced by electrical operating conditions and thermal management. Further criteria which can accelerate degradation include the quality of the phosphor used in white LEDs, component level chip design and LED packaging materials and processes, and the ~~UV resistance of the housing~~ environmental stability of secondary optical components in the product housing. Assuming that an overall lifetime of 5 years and a daily burn time (DBT) of 4 h are achieved, this results in a total operation time of 7 300 h.

Examination of the lumen maintenance of LED light sources and products is performed in a long-term test of either the individual LED components or the entire LED product. LED components are sometimes tested by the LED manufacturer for a minimum of 6 000 h under IESNA LM-80-08. Because of time constraints, however, it is generally not practical to measure degradation a complete LED lighting product over the entire expected lifespan ~~of a product~~. The test methods described in this module ~~monitor light output over a fixed period of operation in order to identify and flag products that are found to suffer significant lumen depreciation~~ take two different approaches to estimating lumen maintenance.

The first approach monitors a DUT's light output over a fixed period of operation in order to identify and flag products that are found to suffer significant lumen depreciation. An initial screening method is described which monitors light output for 500 h (approximately 3 weeks) as well as a longer term evaluation in which light output is monitored for 2 000 h (approximately 12 weeks).

For the 2 000 h test, a ~~L_{70}~~ $L_{90} \geq$ 2 000 h judgment may be made at 1 000 h ~~for products that maintain a 95 % lumen maintenance average across all tested samples~~ if all tested product samples maintain $\geq$ 95 % lumen maintenance (L_{95}) for the entire 1 000 h. Testing has shown that these products are very likely to have L_{70} greater than 2 000 h.

Several of the tests used to evaluate solar LED products are relatively short-term, thus allowing a single test sample to be used on several different tests. Because the lumen maintenance test requires a sample to be dedicated for such a long period of time (up to 12 weeks), test samples should be dedicated to this test ~~and not utilized for other testing~~ until the test is completed. In cases where the battery is not required to conduct the lumen maintenance test, the DUT's battery can be used for other testing (e.g. battery durability testing).

An alternate method for estimating lumen maintenance uses an IESNA LM-80-08 (LM-80) test report from the manufacturer of the LED component. The temperature of the LED(s) in the DUT are measured and compared to the LM-80 data for the component LED(s) and an estimate is reported. The initial screening method monitoring light output for 500 h is still performed, but no further lumen maintenance tests are required. This method therefore represents a faster assessment of a product's lumen maintenance performance.

J.2 Test outcomes

The lumen maintenance test outcomes are listed in Table J.1.

IECNORM.COM : Click to view the full PDF of IEC TS 62257-9-5:2016 RLV
Withdrawn

Table J.1 – Lumen maintenance test outcomes

Metric	Reporting units	Related aspects	Notes
Lumen maintenance at 2 000 h	%	4.2.4.2 2 000 h lumen maintenance	The percentage of initial light output (time = 0 h) that the product generates at the end of the test (time = 2 000 h).
Lumen maintenance at 1 000 h	%	4.2.4.2 2 000 h lumen maintenance	The percentage of initial light output (time = 0 h) that the product generates at the mid-point of the test (time = 1 000 h); this may be used as a provisional result at the discretion of stakeholders.
Lumen maintenance at 500 h	%	4.2.4.1 500 h lumen maintenance	The percentage of initial light output (time = 0 h, after the initial 20-min warm-up period) that the product generates at the end of the test (time = 500 h).

J.3 Related tests

Annex J is not related to any of the other annexes.

J.4 Procedure

J.4.1 General

Two tests are described in J.4: a full lumen maintenance characterization in which DUTs are tested for 2 000 h and a quick screening test in which DUTs are tested for 500 h.

Similar to the full-battery run time test (Annex M), the lumen maintenance test requires an accurate measurement of relative light output over time. Measurements shall be taken in a conditioned space such that the air temperature is 24 °C ± 3 °C. There are four approved methods for making these measurements:

- Photometer tube method (J.4.2.1).
- Fixed geometry method (J.4.2.2).
- Photometer box method (J.4.2.3).
- Integrating sphere method (J.4.2.4).

J.4.2 Full screening

J.4.2.1 Photometer tube method

J.4.2.1.1 Equipment requirements

The following equipment is required. Equipment shall meet the requirements in Table CC.2.

- Photometer tube test apparatus that includes an illuminance meter (described below).
- DC power supply.
- DC voltmeter ~~(at least 0,5 % accuracy)~~ or multimeter.
- ~~DC ammeter (at least 1 % accuracy).~~

J.4.2.1.2 Test prerequisites

The DUT shall have been prepared as described in Annex G.

IECNORM.COM : Click to view the full PDF of IEC TS 62257-9-5:2016 RLV
Withdrawn

J.4.2.1.3 Apparatus

The photometer tube is a self-made device (made from low-cost materials that are readily available in developing countries) for taking measurements of relative luminous flux. A basic rendering of a photometer tube is included in Figure J.1.

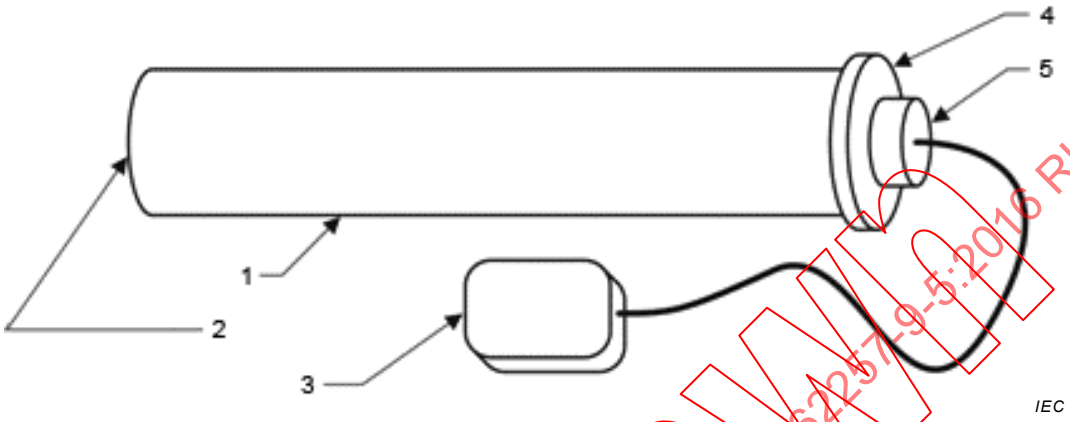

Key

1 Tube
2 Open end
~~3 Photometer~~
3 Illuminance meter
4 End cap
5 ~~Photometer~~ Illuminance meter sensor

Figure J.1 – Schematic of a photometer tube

The recommended tube for this application is made of cardboard, often available free of cost from fabric or paper rolls. PVC pipe is also relatively inexpensive and appropriate for use as a photometer tube. The tube inside diameter should be between 5 cm and 7 cm. The tube should be at least 50 cm in length.

An end cap is fit snugly to one end of the tube. The end cap holds the ~~light~~ illuminance meter sensor in a fixed position at the end of the tube and restricts stray light from entering. Due to material cost and ease of manufacture, wood is the recommended material for the end cap.

No reflective coating is necessary on the internal surface of the photometer tube.

J.4.2.1.4 Procedure

The following steps shall be followed.

a) The DUT battery is replaced by a laboratory power supply that is set to deliver the DUT's standard battery voltage or typical port voltage according to the power supply setup procedure (Annex H).

b) Light from the DUT is directed into the open end of the photometer tube.

The DUT and the photometer are both fixed to the photometer tube for the duration of the test. It is recognized that laboratories testing a large number of samples ~~may~~ are not ~~be~~ always able to dedicate a photometer to each sample that they are testing during the duration of the lumen maintenance test. Thus, an apparatus may be used in which the DUT or the photometer is installed just prior to the making measurements and then removed afterwards.

If such a method is utilized, great care shall be made to ensure that the photometer and the DUT are placed in precisely the same geometric arrangement for each measurement,

IECNORM.COM : Click to view the full PDF of IEC TS 62257-9-5:2016 RLV
Withdrawn

as even slight variation in placement can generate significant measurement errors. Also, if a photometer is installed and removed from an apparatus, it is important that the same photometer is used for all measurements (i.e. do not measure some readings with meter A, and subsequent readings with meter B). Using photometers with "max" functions can facilitate replication of the original geometry (i.e. if the original reading is at the peak of the light distribution, it is possible to search for the peak using a max function).

For DUTs with multiple identical lighting appliances, it is only necessary to measure one of each type of identical lighting appliance; therefore, it is not necessary for all the product's lighting appliances to be running during the duration of the test.

EXAMPLE The DUT includes three different types of lighting appliances (e.g. a tube light, four ambient light points, and two more focused light points). In this case, three of the seven lighting appliances would be measured during testing – one of each lighting appliance type.

c) Care shall be taken to ensure that the DUT is secured to the photometer tube such that exactly the same alignment is maintained for each measurement. Care shall also be taken when securing the DUT to the photometer tube that the DUT does not have its thermal environment altered significantly. If airflow around the DUT is significantly reduced due to the connection to the photometer tube (i.e. if the entire DUT is placed inside the tube), the test results could show a lower lumen maintenance rate than would actually result from normal use.

d) Refer to Table J.2 for the minimum frequency at which the relative illuminance of the DUT, ambient temperature, DUT voltage, and current are measured and recorded. The voltage measurement shall be made as close to the DUT as possible.

e) (optional) A data logger or a lux meter with a data-logging function may be used to record the illuminance every hour.

Table J.2 – Lumen maintenance test minimum frequency of measurement for full screening test

Measurement number	Time interval h	Cumulative time h
1	0,33 (20 min)	0
2	24	24
3	48	72
4	48	120
5	48	168
6	48	216
7	168	384
8	168	552
9	168	720
10	168	888
(optional)	112	1 000
11	168	1 056
12	168	1 224
13	168	1 392
14	168	1 560
15	168	1 728
16	168	1 896
17	104	2 000

IECNORM.COM : Click to view the full PDF of IEC TS 62257-9-5:2016 RLV
Withdrawn

J.4.2.1.5 Calculations

See Clause J.5.

J.4.2.2 Fixed geometry method

J.4.2.2.1 Equipment requirements

The following equipment is required. Equipment shall meet the requirements in Table CC.2.

- DC power supply.
- DC voltmeter ~~(at least 0,5 % accuracy)~~ or multimeter.
- ~~DC ammeter (at least 1 % accuracy).~~
- Illuminance meter.

J.4.2.2.2 Test prerequisites

The DUT shall have been prepared as described in Annex G.

J.4.2.2.3 Apparatus

The apparatus for the method is simply any dedicated space in which the DUT and the photometer are secured so they do not move relative to one another during testing and so no outside light is received. This could be a dedicated area in a "dark room" in which the photosensor and DUT are secured, or other similar setup.

J.4.2.2.4 Procedure

The following steps shall be followed.

~~a) The DUT battery is replaced by a laboratory power supply that is set to deliver the DUT's standard battery voltage (Annex H).~~

~~b) The DUT and the photometer are both place in a fixed locations relative to one another for the duration of the test. Care shall be taken to ensure that the DUT and the photometer are secured such that exactly the same alignment is maintained for each measurement. Care shall also be taken such that no stray light (i.e., ambient light, light from other test samples, etc.) is able to reach the photosensor.~~

a) Supply power to the lighting appliance according to I.4.1. The DUT and the photometer are both placed in a fixed locations relative to one another for the duration of the test. Care shall be taken to ensure that the DUT and the photometer are secured such that exactly the same alignment is maintained for each measurement. Care shall also be taken such that no stray light (i.e. ambient light, light from other test samples, etc.) is able to reach the light sensor.

   For DUTs with multiple identical lighting appliances, it is only necessary to measure one of each type of identical lighting appliance; therefore, it is not necessary for all the product's lighting appliances to be running during the duration of the test.

   EXAMPLE The DUT includes three different types of lighting appliances (e.g. a tube light, four ambient light points, and two more focused light points). In this case, three of the seven lighting appliances would be measured during testing – one of each lighting appliance type.

   The test lab shall determine the best way to test multiple lighting appliances. In some cases, it is possible to test all of the lighting appliances together (for example, the lighting appliances are small and can be placed and tested together inside the test enclosure). In other cases, the lighting appliances should be tested individually (for example, one lighting appliance is placed inside the test enclosure and the others are powered on but left outside the enclosure during the test).

b) Refer to Table J.2 for the minimum frequency at which the relative illuminance of the DUT, ambient temperature, DUT voltage, and current are measured and recorded. The voltage measurement shall be made as close to the DUT as possible.

IECNORM.COM : Click to view the full PDF of IEC TS 62257-9-5:2016 RLV
Withdrawn

c) A data logger or a lux meter with a data-logging function may be used to record the illuminance every hour.

J.4.2.2.5 Calculations

See Clause J.5.

J.4.2.3 Photometer box method

J.4.2.3.1 Equipment requirements

The following equipment is required. Equipment shall meet the requirements in Table CC.2.

- Photometer box that includes an illuminance meter.
- DC power supply.
- DC voltmeter ~~(at least 0,5 % accuracy)~~ or multimeter.
- ~~DC ammeter (at least 1 % accuracy).~~

J.4.2.3.2 Test prerequisites

The DUT shall have been prepared as described in Annex G.

J.4.2.3.3 Apparatus

The apparatus for the method is a photometer box, as described in the full-battery run time test (Annex M).

J.4.2.3.4 Procedure

The following steps shall be followed.

~~a) The DUT battery is replaced by a laboratory power supply that is set to deliver the DUT's standard battery voltage (Annex H).~~

a) Supply power to the lighting appliance according to I.4.1.

b) The relative illuminance is measured using the photometer box.

c) The location of the DUT in the photometer box shall be accurately noted to ensure exact replication of alignment and orientation for each measurement. A printed photograph of the DUT placement within the box is a useful reference (Figure J.1). Alignment marks may also be used to ensure repeatability.

For DUTs with multiple identical lighting appliances, it is only necessary to measure one of each type of identical lighting appliance; therefore, it is not necessary for all the product's lighting appliances to be running during the duration of the test.

EXAMPLE The DUT includes three different types of lighting appliances (e.g. a tube light, four ambient light points, and two more focused light points. In this case, three of the seven lighting appliances would be measured during testing – one of each lighting appliance type.

The test lab shall determine the best way to test multiple lighting appliances. In some cases, it is possible to test all of the lighting appliances together (for example, the lighting appliances are small and can be placed and tested together inside the test enclosure). In other cases, the lighting appliances should be tested individually (for example, one lighting appliance is placed inside the test enclosure and the others are powered on but left outside the enclosure during the test).

d) For the following measurements, the DUT shall be placed in the photometer box with exactly the same alignment and orientation.

e) Refer to Table J.2 for the minimum frequency at which the relative illuminance of the DUT, ambient temperature, DUT voltage, and current are measured and recorded. The voltage measurement shall be made as close to the DUT as possible.

IECNORM.COM : Click to view the full PDF of IEC TS 62257-9-5:2016 RLV
Withdrawn

f) In the case that the DUT remains in the box throughout the duration of the test, a data logger or a lux meter with a data-logging function may be used to record the illuminance every hour.

J.4.2.3.5 Calculations

See Clause J.5.

J.4.2.4 Integrating sphere method

J.4.2.4.1 Equipment requirements

The following equipment is required. Equipment shall meet the requirements in Table CC.2.

- Integrating sphere.
- DC voltmeter ~~(at least 0,5 % accuracy)~~ or multimeter.
- DC ammeter ~~(at least 1 % accuracy)~~.

J.4.2.4.2 Test prerequisites

The DUT shall have been prepared as described in Annex G.

J.4.2.4.3 Apparatus

Integrating sphere.

J.4.2.4.4 Procedure

The following steps shall be followed.

~~a) The DUT battery is replaced by a laboratory power supply that is set to deliver the DUT's standard battery voltage (Annex H).~~

a) Supply power to the lighting appliance according to I.4.1.

b) The luminous flux is measured using an integrating sphere system.

For DUTs with multiple identical lighting appliances, it is only necessary to measure one of each type of identical lighting appliances; therefore, not all the product's lighting appliance need to be running during the duration of the test.

EXAMPLE The DUT includes three different types of lighting appliances (e.g. a tube light, four ambient light points, and two more focused light points). In this case, three of the seven lighting appliances would be measured during testing – one of each lighting appliance type.

The test lab shall determine the best way to test multiple lighting appliances. In some cases, it is possible to test all of the lighting appliances together (for example, the lighting appliances are small and can be placed and tested together inside an integrating sphere). In other cases, the lighting appliances should be tested individually (for example, one lighting appliance is placed inside an integrating sphere and the others are powered on but left outside the sphere during the test).

c) Refer to Table J.2 for the minimum frequency at which the luminous flux of the DUT, ambient temperature, DUT voltage, and current are measured and recorded. The voltage measurement shall be made as close to the DUT as possible.

J.4.2.4.5 Calculations

See Clause J.5.

J.4.3 Initial screening (500 h test)

The lumen maintenance initial screening test is identical to the full screening test with the exception of the test duration, which is reduced from 2 000 h to 500 h. All four of the methods described above for the full screening test (photometer tube, fixed geometry, photometer box,

IECNORM.COM : Click to view the full PDF of IEC TS 62257-9-5:2016 RLV
Withdrawn

and integrating sphere) may be used for the initial screening test. Table J.3 shall be used for minimum testing duration.

Table J.3 – Lumen maintenance test minimum frequency of measurement for Initial screening test

Measurement number	Time interval h	Cumulative time h
1	0,33 (20 min)	0
2	24	24
3	48	72
4	48	120
5	48	168
6	48	216
7	168	384
8	116	500

J.5 Calculations

Lumen maintenance is calculated by dividing the final light output reading by the initial light output reading. Lumen maintenance is always reported along with the test duration.

If the light output of the DUT ever drops below ~~70~~ 85 % of the initial reading, then operating hours at which this occurs should be reported as ~~L_{70}~~ L_{85}. ~~For example, if the initial reading was 1 000 lx, and readings dropped to 700 lx after 720 h, then L_{70} = 720 h.~~

EXAMPLE If the initial reading was 1 000 lx, and readings dropped to 850 lx after 850 h, then L_{85} = 850 h.

If the light output of the DUT at the end of the 2 000 hour test is greater than ~~70~~ 85 % of the initial reading, the ~~L_{70}~~ L_{85} rating will then be ~~L_{70}~~ L_{85} > 2 000 h.

J.6 Alternate method for testing lumen maintenance using IESNA LM-80-08

J.6.1 Background

The lumen maintenance of an LED or LED array contained in a lighting product can be estimated by measuring the LED case temperature(s) (T_C). This measurement is compared to IESNA LM-80-08 data (minimum 6 000 h) from the LED manufacturer to estimate the DUT's lumen maintenance at 2 000 h.

The LED case temperature (T_C) measurement location, also sometimes referred to as the LED temperature measurement point (TMP), is established by the LED manufacture. T_C is related to the temperature of the LED die and is measured by attaching a thermocouple as close to the LED component as possible on a printed circuit board pad adjacent to the LED. This measurement location may be one of the LED lead pads or may be a separate, electrically neutral pad on the printed circuit board configured as a heat sink for the LED. The LED manufacturer will have information on the correct TMP for the LED that was used during the LM-80-08 tests. The DUT manufacturer shall provide a TMP for the LEDs in the product that matches the T_C measurement location used for the LM-80 tests. This is often done by using the same printed circuit board pad configuration that was used for the LM-80 tests in the design of the DUT.

This LED temperature procedure tests the instantaneous LED temperature during normal operation to make an LED lumen maintenance assessment. It does not test longer duration operation of the LED or LED drive circuitry. To assess the ability of the DUT electronics to

IECNORM.COM : Click to view the full PDF of IEC TS 62257-9-5:2016 RLV
Withdrawn

drive the LED(s) over a longer time period, a 500 h initial screening test shall also be performed as described in J.4.3.

J.6.2 Test prerequisites

This test shall not be performed unless *all* of the following criteria are met.

- The DUT manufacturer has supplied the DUT LED component specification(s), including the complete component number and the LED specification document from the LED manufacturer.
- The DUT manufacturer has supplied IESNA LM-80-08 (LM-80) test data for the LED(s) used in the lighting product. LM-80 testing is typically done by the LED manufacturer. The laboratory performing the LM-80 test shall be accredited to do this type of testing.
- The DUT manufacturer has supplied an LED RMS drive current measurement at the product's highest light setting.
- The LM-80 test data includes an LED case temperature (T_C) and LED drive current higher than the DUT's LED case temperature and drive current.
- The DUT is designed in such a way as to allow temperature measurement of the LED T_C as specified by the LED manufacturer.
- The DUT manufacturer has provided instructions and diagrams showing the appropriate attachment point for thermocouples used during the test.

J.6.3 Procedure

Perform the following procedure.

a) Review documentation supplied by the DUT manufacturer to confirm that the DUT qualifies for testing using this method.

b) Prepare the DUT for LED testing as outlined in J.6.4 below.

c) Attach thermocouples to one or more LED(s) as outlined in J.6.4 below.

d) Reassemble the product and orient in its normal operating position. The DUT shall be operated in a 25 °C ± 2 °C still air environment free from drafts, fans, and other air currents that could produce forced air convective currents and contribute to the cooling of the product.

e) Supply power to the lighting appliance according to I.4.1.

f) Allow the product to thermally stabilize for a minimum of 1 h. The LED case temperatures should be monitored to confirm thermal stabilization.

g) Record the LED case temperature (T_C).

h) Prepare the DUT for initial screening and perform a 500 h test as described in J.4.3.

J.6.4 DUT preparation and LED thermocouple attachment guidelines

The LED(s) in the DUT shall be accessed to allow the attachment of thermocouple wires. When opening the DUT optical housing to access the LED(s), the normal operating environment shall be preserved to the maximum degree possible. Holes drilled into compartments should be as small as possible and covered with tape to prevent additional air movement during operation. The T_C location of the LED(s) shall be accessible to allow thermocouple attachment without disturbing the normal operation of the array.

Small gauge Type T thermocouples (wire diameter ≤ 0,13 mm) are recommended and can be readily soldered to copper circuit board pads. Other thermocouples are acceptable but require the appropriate soldering flux and can be difficult to solder. The thermocouple attachment, including any additional solder or epoxy, shall be as small as possible to prevent an additional heat conduction pathway that could artificially contribute to the heat sinking of the LED component. LED(s) with large thermal pads or heat sinks can require preheating to facilitate soldering the thermocouple to the TMP or T_C measurement location.

IECNORM.COM : Click to view the full PDF of IEC TS 62257-9-5:2016 RLV
Withdrawn

A thermocouple shall be attached to an LED's temperature measurement point by soldering or gluing using a thermally conductive adhesive/epoxy. The attachment method shall ensure adequate thermal contact between the thermocouple and the TMP. Thermocouple wire should be routed away from direct illumination by the LED(s) and/or should be shielded from direct light to prevent artificial heating of the wire. This can usually be accomplished with white tape or white heat-shrink tubing. Tape or tubing should not cover the LED in a way that could increase the self-heating of the LED component.

When testing a DUT with multiple LEDs in an LED array, the test lab shall attempt to identify the LED in the array that will experience the highest temperature in operation. In practice, this is often an LED located in the centre of the array. Measurements on multiple LEDs in an array may be warranted to adequately identify the T_C value used for an LM-80 assessment.

J.6.5 Calculations

The LM-80 test report for the DUT LED will contain lumen maintenance data for LED temperature measurements at 55 °C, 85 °C, and one additional temperature chosen by the LED manufacturer. These measurements are performed for a minimum duration of 6 000 h and will therefore contain test data at 2 000 h.

The test lab shall compare the LM-80 data and T_C to estimate the lumen maintenance of the product. The test lab shall use the nearest LM-80 data point above the duration (> 2 000 h), DUT T_C , and LED drive current.

EXAMPLE If the DUT T_C is measured at 65 °C, LM-80 data at 85 °C (or greater than 65 °C when available) would be used. If the DUT LED drive current is 65 mA, the LM-80 data would be at drive currents greater than 65 mA.

The test lab shall report the lumen maintenance of the DUT as the lumen maintenance measured by the nearest (higher conditions for T_C and drive current) LM-80 test data as specified above.

J.7 Reporting

Report the following in the lumen maintenance test report ~~(a sample template is provided in Annex X)~~.

- Metadata:
  - report name;
  - procedure(s) used;
  - DUT manufacturer;
  - DUT name;
  - DUT model number;
  - DUT setting;
  - test room temperature (°C);
  - name of test laboratory;
  - approving person;
  - date of report approval.
- Results for tested DUT aspects for samples 1 through n:
  - drive current (A);
  - drive voltage (V);
  - stabilisation time (min);
  - lumen maintenance (note if at 500 h, 1 000 h, or 2 000 h) (%);

IECNORM.COM : Click to view the full PDF of IEC TS 62257-9-5:2016 RLV

  - ~~L_{70}~~ L_{85} (the cumulative time at which the light output of the DUT first drops below ~~70~~ 85 % of the initial reading) (h).
- Average of n sample results for each lumen maintenance and ~~L_{70}~~ L_{85} DUT aspect tested.
- Coefficient of variation of n sample results for each lumen maintenance and ~~L_{70}~~ L_{85} DUT aspect tested (%).
- DUT's rating for lumen maintenance and ~~L_{70}~~ L_{85} aspects tested, if available.
- Deviation of the average result from the DUT's rating for each lumen maintenance and ~~L_{70}~~ L_{85} aspect tested, if available (%).
- Comments:
  - individual comments, as necessary, for samples 1 through n;
  - overall comments, as necessary, for collective set of samples 1 through n.
- Figures:
  - plot of lumen maintenance (see example in Figure J.2).
- Datasets:
  - table with all illuminance or flux, ambient temperature, DUT voltage, and current measurements.

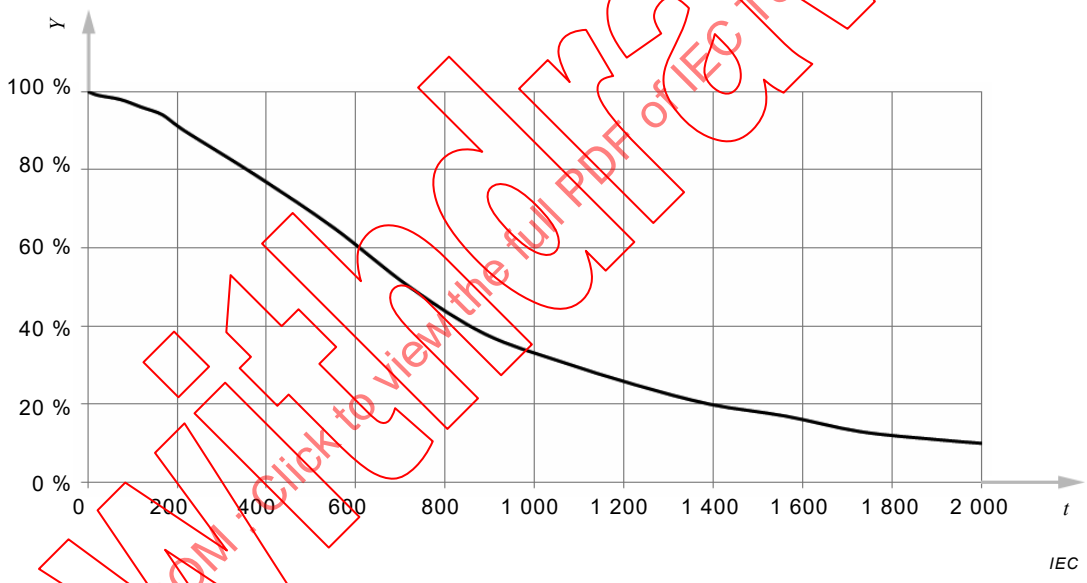

Key

t Time (h)

Y Relative luminous flux

Figure J.2 – Example lumen maintenance plot

IECNORM.COM : Click to view the full PDF of IEC TS 62257-9-5:2016 RLV
Withdrawn

Annex K
(normative)

Battery test

K.1 Background

The battery test is used to determine a DUT's actual battery capacity and ~~storage~~ round-trip energy efficiency. This information is useful to determine if a battery is mislabelled or damaged. During the test, the battery is connected to a battery analyser, which performs charge-discharge cycles on the battery. The last charge-discharge cycle data from the battery test is analysed to determine the actual battery capacity and battery ~~storage~~ round-trip energy efficiency.

K.2 Test outcomes

The test outcomes of the battery test are listed in Table K.1.

Table K.1 – Battery test outcomes

Metric	Reporting units	Related aspects	Note
Battery capacity (C_b)	Milliampere-hours (mAh) at a specific discharge current	4.2.5.1 Battery capacity	--
Battery ~~storage~~ round-trip energy efficiency (η_b)	Percentage (%)	4.2.5.2 Battery ~~storage~~ round-trip energy efficiency	At least two complete charge-discharge cycles are required for the calculation.

K.3 Related tests

The battery test results are inputs to the full-discharge preparation procedure (Annex N), the solar charge test (Annex R), the battery durability test (Annex BB), and the energy service calculations (Annex GG).

K.4 Procedure

K.4.1 General

Table K.2 contains battery testing information specific to the five common types (i.e. chemistries) of batteries. This information is pertinent to K.4.2.4, K.4.3.4, K.4.4.4, and K.4.5.4.

New or improved battery technologies ~~may~~ could have emerged for which Table K.2 does not contain information ~~for~~. The test lab should sufficiently research the new or improved battery technology to determine appropriate recommended battery practices for that new or improved battery technology. Communication directly with the supplier ~~for~~ of the DUT's battery is recommended. For example, if the battery under test is a lithium battery but is not the lithium ion (3,7 V nominal voltage) or lithium iron phosphate chemistry, alternative charging and discharging rates and end-of-cycle voltage parameters should be obtained, preferably from the battery supplier.

IECNORM.COM : Click to view the full PDF of IEC TS 62257-9-5:2016 RLV
Withdrawn

Table K.2 – Recommended battery testing specifications according to battery chemistry

Battery type	Charging				Discharging	
	Charge rate I_t A	Maximum charge voltage V/cell[a]	End-of-charge/ topping charge rate I_t A	End-of-charge time with constant voltage h[b]	Discharge rate I_t A	End-of-discharge voltage V/cell
~~Sealed~~ Valve-regulated lead-acid	0,1	2,40	0,05	10	0,1	~~1,75~~ 1,80
Lithium-ion	0,2	4,20	0,05	1	0,2	3,00
Lithium iron phosphate	0,2	3,60	0,01	1	0,2	2,50

Battery type	Charging				Discharging	
	Charge rate I_t A	Negative slope mV/cell	Overcharge (charge factor)[c]	Partial charge duration h[d]	Discharge rate I_t A	End-of-discharge voltage V/cell
Nickel-metal hydride	0,1	8,00	1,6	9	0,2	1,00
Nickel-cadmium	0,1	8,00	1,6	9	0,2	1,00

[a] For safety, never exceed the battery supplier's specified maximum allowable voltage.

[b] After a battery is charged to a specified voltage, it may be topped off using the recommended end-of-charge/ topping charge rate, or alternatively the battery may be topped off by supplying a constant voltage (the maximum charge voltage) over the recommended end-or-charge time.

[c] Some battery analysers are not equipped to end a charge based on the negative slope method. To ensure the battery is fully charged, an alternative option is to overcharge the battery.

[d] This value is used for measuring the battery efficiency only.

K.4.2 ~~Sealed~~ Valve-regulated lead-acid battery test

K.4.2.1 General

The DUT's ~~sealed~~ valve-regulated lead-acid battery is cycled on a battery analyser, and the data from the final charge-discharge cycle is used to determine the DUT's actual battery capacity and ~~storage~~ round-trip energy efficiency.

K.4.2.2 Equipment requirements

~~A battery analyser with an overall accuracy for voltage, current, and capacity measurements within the following tolerances:~~

- ~~± 1 % for voltage;~~
- ~~± 1 % for current;~~
- ~~± 1 % for capacity.~~

A battery analyser meeting the requirements in Table CC.2 is required.

A DC power supply is needed in some cases, depending on the battery tested and the battery analyser in use.

IECNORM.COM : Click to view the full PDF of IEC TS 62257-9-5:2016 RLV
Withdrawn

K.4.2.3 Test prerequisites

The battery may be taken out of the DUT for this test, if desired. The DUT shall have been prepared as described in Annex G. The test shall be carried out at 20 °C ± 5 °C.

K.4.2.4 Procedure

~~These steps shall be followed:~~

~~a) Prime the battery using the charge and discharge information from Table K.2—calculated using the battery's rated capacity.~~

~~1) Using the battery analyser, continuously cycle the battery until the maximum battery capacity is reached (i.e., until the capacity improvement is less than or equal to 5 % over the previous battery capacity).~~

~~b) Calculate the DUT's battery capacity using data from the final charge-discharge prime cycle (see K.4.2.5), and use the measured capacity as the target capacity for the next charge-discharge cycle.~~

~~c) Charge-discharge cycle the battery—using the previous cycle's calculated battery capacity as the next cycle's target battery capacity—until the change in measured battery capacity between subsequent cycles is less than or equal to 15 %.~~

~~1) Charge the battery using the charge information from Table K.2. After charging, the battery shall be stored in an ambient temperature of 20 °C ± 5 °C for 1 h.~~

~~2) Discharge the battery using the discharge information in Table K.2. Calculate the battery capacity according to K.4.2.5.~~

~~d) Once the requirement in K.4.2.4 (c) has been met, perform one final charge-discharge cycle using identical specifications to the last charge-discharge cycle in K.4.2.4 (c). The information from this final charge-discharge cycle shall be used to calculate the battery storage efficiency in K.4.2.5.~~

~~e) If the battery will be stored after undergoing this test, charge the battery using the charge information in Table K.2.~~

Perform the capacity test from IEC 61427-1:2013, 8.1 (which references IEC 61056-1), with the following modifications:

- Perform a minimum of five charge-discharge cycles to ensure that the battery is sufficiently exercised prior to determining capacity and to ensure that enough data are available to calculate round-trip energy efficiency. Use the final charge-discharge cycle to calculate the battery's actual capacity and round-trip energy efficiency.
- Carry out the test at 20 °C ± 5 K.
- The battery shall be kept at open circuit for 1 h to 24 h after charging before starting each discharge. (It is not necessary to wait 5 h as required by IEC 60156-1.)
- Equipment need not meet the accuracy requirements of IEC 61427-1:2013 or IEC 61056-1, provided that it meets the requirements of Table CC.2.
- Record the current at an interval of 1 min or less.

If the battery contains internal circuitry (refer to F.4.3.5) and either the battery analyser will not start the test or the tester decides that the results from the test are unexpected or faulty in some way, the test may be repeated with the battery analyser connected on the battery side of the internal circuitry, if the test laboratory determines that it is safe to do so.

If the battery will be stored after undergoing this test, charge the battery using the charge information in Table K.2 and disconnect the battery from the DUT. Charge the battery every six months, or every three months if stored at a temperature greater than 30 °C.

If the battery analyser does not recognize the battery upon starting any of the above steps, the battery voltage could have dropped below the battery analyser's minimum threshold. If

IECNORM.COM : Click to view the full PDF of IEC TS 62257-9-5:2016 RLV
Withdrawn

this is the case, a power supply shall be used to charge the battery in accordance with IEC 61427-1:2013 before the DUT's battery capacity is determined.

K.4.2.5 Calculations

Perform the following calculations.

a) Determine the total energy input into the DUT's battery during the final charge cycle (E_c) using the following formula:

$$E_c = \sum \left(V_c \cdot I_c \cdot \Delta t \right)$$

where

E_c is the energy entering the battery during the charge cycle, in watt·hours (Wh);

V_c is the voltage recorded during the charge cycle, in volts (V);

I_c is the current recorded during the charge cycle, in amperes (~~m~~A);

Δt is the time interval between ~~subsequent data points~~ measurements, in hours (h).

b) Determine the total energy output from the DUT's battery during the final discharge cycle using the following formula:

$$E_d = \sum \left(V_d \cdot I_d \cdot \Delta t \right)$$

where

E_d is the battery's energy output during the discharge cycle, in watt·hours (Wh);

V_d is the voltage recorded during the discharge cycle, in volts (V);

I_d is the current recorded during the discharge cycle, in amperes (~~m~~A);

Δt is the time interval between ~~subsequent data points~~ measurements, in hours (h).

c) Determine the DUT's battery capacity with data from the final discharge cycle using the following formula:

$$C = \sum \left(I_d \cdot \Delta t \right)$$

where

~~C_b~~ C is the measured battery capacity, in ~~milli~~ampere-hours (~~m~~Ah);

I_d is the current recorded during the discharge cycle, in amperes (~~m~~A);

Δt is the time interval between ~~subsequent current data~~ measurements, in hours (h).

d) Correct the capacity to the reference temperature of 25 °C using the following formula (from IEC 60896-21), with λ set to 0,006 K^{-1}:

$$C_a = C / \left(1 + \lambda \left(T - 25\ °C \right) \right)$$

where

C_a is the actual battery capacity, in ampere-hours (Ah);

C is the measured battery capacity, in amperes (A);

λ is 0,006 K^{-1}.

T is the battery temperature at the start of the final discharge cycle, in degrees Celsius (°C).

e) Determine the DUT's battery round-trip energy efficiency using the following formula:

$$\eta_b = \frac{E_d}{E_c}$$

where

η_b is the battery's ~~storage~~ round-trip energy efficiency;

IECNORM.COM : Click to view the full PDF of IEC TS 62257-9-5:2016 RLV
Withdrawn

E_d is the battery's energy output during the final discharge cycle, in watt·hours (Wh);

E_c is the energy input to the battery during the final charge cycle, in watt·hours (Wh).

Report the actual capacity (i.e. the value that has been corrected to 25 °C).

K.4.3 Nickel-metal hydride battery test

K.4.3.1 General

The DUT's nickel-metal hydride battery is cycled on a battery analyser, and the data from the final charge-discharge cycle is used to determine the DUT's actual battery capacity and battery ~~storage~~ round-trip energy efficiency.

The nickel-metal hydride battery test procedure refers to the following charging methods.

- Negative slope charging method: the battery is charged until the voltage decreases from its maximum value by the amount given in Table K.2.
- Overcharge charging method: the battery is charged at constant current for a fixed duration given by the following formula:

$$T_c = OC \cdot \frac{C_b}{I_c}$$

where

T_c is the duration of the charge cycle, in hours (h);

OC is the overcharge (charge factor) value given in Table K.2;

C_b is the measured or rated battery capacity, in milliampere-hours (mAh);

I_c is the charge current, in milliamperes (mA);

K.4.3.2 Equipment requirements

~~A battery analyser with the voltage, current, and capacity measurement tolerances specified in Clause 4 of IEC 61951-2.~~

A battery analyser meeting the requirements in Table CC.2.

K.4.3.3 Test prerequisites

The battery may be taken out of the DUT for this test, if desired. The DUT shall have been prepared as described in Annex G. The test shall be carried out at 20 °C ± 5 °C. As specified in IEC 61951-2:2011, the test shall be carried out at a relative humidity of 65 % ± 20 %.

K.4.3.4 Procedure

~~These steps shall be followed:~~

~~a) Prime the battery using the charge and discharge information from Table K.2—calculated using the battery's rated capacity.~~

~~1) Using the battery analyser, continuously cycle the battery until the maximum battery capacity is reached (i.e., until the capacity improvement is less than or equal to 5 % over the previous battery capacity).~~

~~b) Calculate the DUT's battery capacity using data from the final charge-discharge prime cycle (see K.4.2.5), and use the measured capacity as the target capacity for the next charge-discharge cycle.~~

~~c) Charge-discharge cycle the battery—using the previous cycle's calculated battery capacity as the next cycle's target battery capacity—until the change in measured battery capacity between subsequent cycles is less than or equal to 15 %.~~

IECNORM.COM : Click to view the full PDF of IEC TS 62257-9-5:2016 RLV
Withdrawn

~~1) Charge the battery using the charge information in Table K.2. After charging, the battery shall be stored in an ambient temperature of 20 °C ± 5 °C for 1 h.~~

~~2) Discharge the battery using the discharge information in Table K.2. Calculate the battery capacity according to K.4.2.5.~~

~~d) Once the requirement in K.4.3.4 (c) has been met, perform one final charge-discharge cycle using identical specifications to the last charge-discharge cycle in K.4.3.4 (c). The information from this final charge-discharge cycle shall be used to calculate the battery storage efficiency in K.4.2.5.~~

~~e) If the battery will be stored after undergoing this test, charge the battery using the charge information in Table K.2.~~

Perform the capacity test from IEC 61951-2:2011, 7.2, with the following modifications:

- Perform a minimum of five charge-discharge cycles to ensure that the battery is sufficiently exercised prior to determining capacity and to ensure that enough data are available to calculate round-trip energy efficiency. Use the final charge-discharge cycle to calculate the battery's actual capacity and round-trip energy efficiency.
- Record the current at an interval of 1 min or less.

If the battery contains internal circuitry (refer to F.4.3.5) and either the battery analyser will not start the test or the tester decides that the results from the test are unexpected or faulty in some way, the test may be repeated with the battery analyser connected on the battery side of the internal circuitry, if the test laboratory determines that it is safe to do so.

If the battery analyser does not recognize the battery upon starting any of the above steps, the battery output could have dropped to 0 V. If this is the case, a constant-current charge as specified in Table K.2 of Annex K from a power supply may be used to bring the battery out of a 0 V state of charge before the DUT's battery capacity is determined.

Nickel-based batteries need not be charged prior to storage; however, batteries should be disconnected from the DUT prior to long-term storage to avoid polarity reversal. It is often convenient to end the battery test with a charge to allow for further testing.

K.4.3.5 Calculations

~~Perform the same calculations listed in K.4.2.5.~~

Perform the following calculations.

a) Determine the total energy input into the DUT's battery during the final charge cycle (E_c) using the following formula:

$$E_c = \sum \left(V_c \cdot I_c \cdot \Delta t \right)$$

where

E_c is the energy entering the battery during the charge cycle, in watt·hours (Wh);

V_c is the voltage recorded during the charge cycle, in volts (V);

I_c is the current recorded during the charge cycle, in amperes (A);

Δt is the time interval between subsequent data points, in hours (h).

b) Determine the total energy output from the DUT's battery during the final discharge cycle using the following formula:

$$E_d = \sum \left(V_d \cdot I_d \cdot \Delta t \right)$$

where

E_d is the battery's energy output during the discharge cycle, in watt·hours (Wh);

IECNORM.COM : Click to view the full PDF of IEC TS 62257-9-5:2016 RLV
Withdrawn

V_d is the voltage recorded during the discharge cycle, in volts (V);

I_d is the current recorded during the discharge cycle, in amperes (A);

Δt is the time interval between subsequent data points, in hours (h).

c) Determine the DUT's battery capacity with data from the final discharge cycle using the following formula:

$$C_b = \sum \left(I_d \cdot \Delta t \right)$$

where

C_b is the measured battery capacity, in milliampere-hours (mAh);

I_d is the current recorded during the discharge cycle, in milliamperes (mA);

Δt is the time interval between subsequent current data, in hours (h).

d) Determine the DUT's battery efficiency using the following formula:

$$\eta_b = \frac{E_d}{E_c}$$

where

η_b is the battery round-trip energy efficiency;

E_d is the battery's energy output during the discharge cycle, in watt·hours (Wh);

E_c is the energy input to the battery during the charge cycle, in watt·hours (Wh).

K.4.4 Lithium-ion battery test

K.4.4.1 General

The DUT's lithium-ion battery is cycled on a battery analyser, and the data from the final charge-discharge cycle is used to determine the DUT's actual battery capacity and battery ~~storage~~ round-trip energy efficiency.

K.4.4.2 Equipment requirements

~~A battery analyser with the voltage, current, and capacity measurement tolerances specified in Clause 4 of IEC 61960.~~

A battery analyser meeting the requirements in Table CC.2 is required.

For battery packs containing more than one cell in series, a protection circuit that monitors the voltage of each cell (or each set of cells connected in parallel) shall be used during charging, if this functionality is not incorporated into the battery pack. This functionality may be built into the battery analyser or may be a separate piece of equipment. The voltage of each individual cell (or each set of cells connected in parallel) should not be allowed to exceed the maximum battery testing voltage given in Table L.2 unless manufacturer-provided battery specifications indicate that such operation can be performed safely. The temperature of each individual cell should not be allowed to exceed 45 °C. Care should be taken that any voltage drop introduced by the protection circuit (e.g. relay contact resistance) does not affect the results.

The use of a battery protection circuit other than the one incorporated into the DUT can affect the usable capacity of the battery. In cases where the test results are disputed for this reason, the battery capacity may also be evaluated by disassembling the battery pack and performing the test on a single cell (or set of cells connected in parallel). The cell or parallel grouping of cells should be selected at random for each DUT. The capacity of the entire pack may be assumed to be equal to the capacity of the selected cell or parallel grouping of cells. If the battery under test is to be used for further testing, care should be taken to return all cells of the battery to a balanced state of charge prior to further testing, e.g. by fully discharging or charging the cells under test to match the rest of the battery pack's state of charge.

IECNORM.COM : Click to view the full PDF of IEC TS 62257-9-5:2016 RLV
Withdrawn

K.4.4.3 Test prerequisites

The battery may be taken out of the DUT for this test, if desired. The DUT shall have been prepared as described in Annex G. The test shall be carried out at 20 °C ± 5 °C. As specified in IEC 61960:2011, the test shall be carried out in still air.

K.4.4.4 Procedure

~~These steps shall be followed:~~

~~a) Discharge the battery using the discharge information in Table K.2 – calculated using the battery's rated capacity. Calculate the battery capacity according to K.4.2.5.~~

~~b) Charge-discharge cycle the battery using the previous cycle's calculated battery capacity as the next cycle's target battery capacity – until the change in measured battery capacity between subsequent cycles is less than or equal to 15 %.~~

~~1) Charge the battery using the charging information in Table K.2. After charging, the battery shall be stored in an ambient temperature of 20 °C ± 5 °C for 1 h.~~

~~2) Discharge the battery using the discharge information in Table K.2. Calculate the battery capacity according to K.4.2.5.~~

~~c) Once the requirement in K.4.4.4 (b) has been met, perform one final charge-discharge cycle using identical specifications to the last charge-discharge cycle in K.4.4.4 (b). The information from this final charge-discharge cycle shall be used to calculate the battery storage efficiency in K.4.2.5 (d).~~

~~d) If the battery will be stored after undergoing this test, charge the battery using the charge rate specified in Table K.2 for 2.5 h (i.e., store at 50 % state of charge).~~

Perform the capacity test from IEC 61960:2011, 7.3.1, with the following modifications.

- Perform a minimum of five charge-discharge cycles to ensure that the battery is sufficiently exercised prior to determining capacity and to ensure that enough data are available to calculate round-trip energy efficiency. Use the final charge-discharge cycle to calculate the battery's actual capacity and round-trip energy efficiency.
- Charge and discharge the battery using the information in Table K.2 – calculated using the battery's rated capacity.
- Record the current at an interval of 1 min or less.

If the battery contains internal circuitry (refer to F.4.3.5) and either the battery analyser will not start the test or the tester decides that the results from the test are unexpected or faulty in some way, the test may be repeated with the battery analyser connected on the battery side of the internal circuitry, if the test laboratory determines that it is safe to do so.

If the battery will be stored after undergoing this test, charge the battery using the charge rate specified in Table K.2 for 2,5 h (i.e., store at 50 % state of charge) and disconnect the battery from the DUT.

If the battery analyser does not recognize the battery upon starting any of the above steps, the battery could have been disconnected by its internal protection circuit. In this case, the voltage at the battery terminals will be zero, which can prevent the battery analyser from recognizing the battery. In this situation, a current-limited constant-voltage charge, at a current no higher than that specified in Table K.2 of Annex K from a power supply may be required to re-enable the battery before the DUT's battery capacity is determined. If the cell voltage has decreased below 2,5 V for lithium iron phosphate or 3,0 V for other lithium-ion, perform the charge at 0,1 I_t A. The voltage shall not exceed the value given in Table K.2. It is recommended to set the power supply to the lowest possible voltage that will allow the battery analyser to recognize the battery and complete the charge cycle. If the battery is suspected to be damaged, it should not be charged using this method. It can be necessary to bypass the battery's internal protection circuit to perform this step; in this case, the cell voltage should be measured prior to charging the battery to ensure that it has not dropped below the minimum battery testing voltage given in Table L.1. If the battery voltage has dropped below the

IECNORM.COM : Click to view the full PDF of IEC TS 62257-9-5:2016 RLV
Withdrawn

minimum battery testing voltage, charging the battery can be unsafe; the test laboratory should discontinue the test if in the tester's discretion it would be unsafe to continue.

K.4.4.5 Calculations

Perform the same calculations listed in K.4.3.5.

K.4.5 Lithium iron phosphate battery test

K.4.5.1 General

The DUT's lithium iron phosphate battery is cycled on a battery analyser, and the data from the final charge-discharge cycle is used to determine the DUT's actual battery capacity and battery ~~storage~~ round-trip energy efficiency.

K.4.5.2 Equipment requirements

~~A battery analyser with the voltage, current, and capacity measurement tolerances specified in Clause 4 of IEC 61960.~~

A battery analyser meeting the requirements in Table CC.2 is required.

For battery packs containing more than one cell in series, a protection circuit that monitors the voltage of each cell (or each set of cells connected in parallel) shall be used during charging, if this functionality is not incorporated into the battery pack. This functionality may be built into the battery analyser or may be a separate piece of equipment. The voltage of each individual cell (or each set of cells connected in parallel) should not be allowed to exceed the maximum battery testing voltage given in Table L.2 unless manufacturer-provided battery specifications indicate that such operation can be performed safely. The temperature of each individual cell should not be allowed to exceed 45 °C. Care should be taken that any voltage drop introduced by the protection circuit (e.g. relay contact resistance) does not affect the results.

The use of a battery protection circuit other than the one incorporated into the DUT can affect the usable capacity of the battery. In cases where the test results are disputed for this reason, the battery capacity may also be evaluated by disassembling the battery pack and performing the test on a single cell (or set of cells connected in parallel). The cell or parallel grouping of cells should be selected at random for each DUT. The capacity of the entire pack may be assumed to be equal to the capacity of the selected cell or parallel grouping of cells. If the battery under test is to be used for further testing, care should be taken to return all cells of the battery to a balanced state of charge prior to further testing, e.g. by fully discharging or charging the cells under test to match the rest of the battery pack's state of charge.

K.4.5.3 Test prerequisites

The battery may be taken out of the DUT for this test, if desired. The DUT shall have been prepared as described in Annex G. The test shall be carried out at 20 °C ± 5 °C. As specified in IEC 61960:2011, the test shall be carried out in still air.

K.4.5.4 Procedure

Follow the procedure in K.4.4.4.

K.4.5.5 Calculations

Perform the same calculations listed in K.4.3.5.

IECNORM.COM : Click to view the full PDF of IEC TS 62257-9-5:2016 RLV
Withdrawn

~~**K.4.6 Nickel-cadmium battery test**~~

~~**K.4.6.1 General**~~

~~The DUT's nickel-cadmium battery is cycled on a battery analyser and the data from the final charge-discharge cycle is used to determine the DUT's actual battery capacity and battery storage efficiency.~~

~~**K.4.6.2 Equipment requirements**~~

~~A battery analyser with the voltage, current, and capacity measurement tolerances specified in Clause 4 of IEC 61951-1.~~

~~**K.4.6.3 Test prerequisites**~~

~~The battery may be taken out of the DUT for this test, if desired. The DUT shall have been prepared as described in Annex G. The test shall be carried out at 20 °C ± 5 °C.~~

~~**K.4.6.4 Procedure**~~

~~Follow the procedure in K.4.3.4.~~

~~**K.4.6.5 Calculations**~~

~~Perform the same calculations listed in K.4.2.5.~~

K.5 Reporting

Report the following in the battery test report ~~(a sample template is provided in Annex X)~~.

- Metadata:
  - report name
  - procedure(s) used
  - DUT manufacturer
  - DUT name
  - DUT model number
  - name of test laboratory
  - approving person
  - date of report approval
- Results for tested DUT aspects for samples 1 through n:
  - battery capacity (~~m~~Ah) ~~at a specific discharge current~~ and corresponding discharge current (in terms of I_t A);
  - battery ~~storage~~ round-trip energy efficiency (%).
- Average of n sample results for each DUT aspect tested.
- Coefficient of variation of n sample results for each DUT aspect tested (%).
- DUT's rating for aspects tested, if available.
- Deviation of the average result from the DUT's rating for each aspect tested, if available (%).

IECNORM.COM : Click to view the full PDF of IEC TS 62257-9-5:2016 RLV
Withdrawn

- Comments:
  - individual comments, as necessary, for samples 1 through n;
  - overall comments, as necessary, for collective set of samples 1 through n.

Withdrawn
IECNORM.COM : Click to view the full PDF of IEC TS 62257-9-5:2016 RLV

Annex L
(informative)

Battery testing recommended practices

L.1 Background

~~During the battery test (Annex K), a DUT's battery is cycled numerous times in order to determine the battery's actual capacity and storage efficiency. Clause L.2 provides a battery testing process flowchart that may be used to assist the battery testing process.~~

~~In addition to the deep discharge and overcharge protection guidelines specified in the charge controller behaviour test (Annex S), Clause L.3 and Clause L.4 provide recommended deep discharge protection voltage and overcharge protection voltage values and maximum and minimum battery testing voltage values to prevent damage to the DUT and ensure safety of test personnel.~~

~~If the deep discharge and overcharge protection voltage thresholds are not provided by the product or battery manufacturer, the information in Table L.1 and Table L.2 may be used to prevent damage to the DUT and ensure safety of test personnel.~~

Several tests in this part of IEC 62257 involve charging or discharging a battery:

- During the charge controller behaviour test (Annex S), the DUT's battery is either charged or discharged to determine if the DUT has appropriate deep discharge protection and overcharge protection.
- During the grid charge test (Annex O), solar charge test (Annex R), and electromechanical charge test (Annex P), the DUT's battery is charged.
- During the full-battery run time test (Annex M), the DUT's battery is discharged.

In some cases, it is not known whether the DUT provides sufficient protection to avoid damage to the battery or test apparatus or injury to test laboratory personnel. Annex L provides recommended charging and discharging practices to prevent damage to the DUT and ensure safety of test personnel.

A variety of battery chemistry types are used in products meeting the scope of this part of IEC 62257, potentially including types that were not in common use at the date of publication. The information in Table L.1 and Table L.2 is intended to prevent damage to the DUT and test apparatus and ensure safety of test personnel for most common battery types. When possible, battery specifications should be obtained from the battery manufacturer to evaluate whether the protection strategy used by the DUT is appropriate for the specific battery used.

~~L.2 Battery testing process flowchart~~

~~The battery testing flowchart below (Figure L.1) may be used to assist in performing the battery test procedures in the battery test (Annex K).~~

IECNORM.COM : Click to view the full PDF of IEC TS 62257-9-5:2016 RLV
Withdrawn

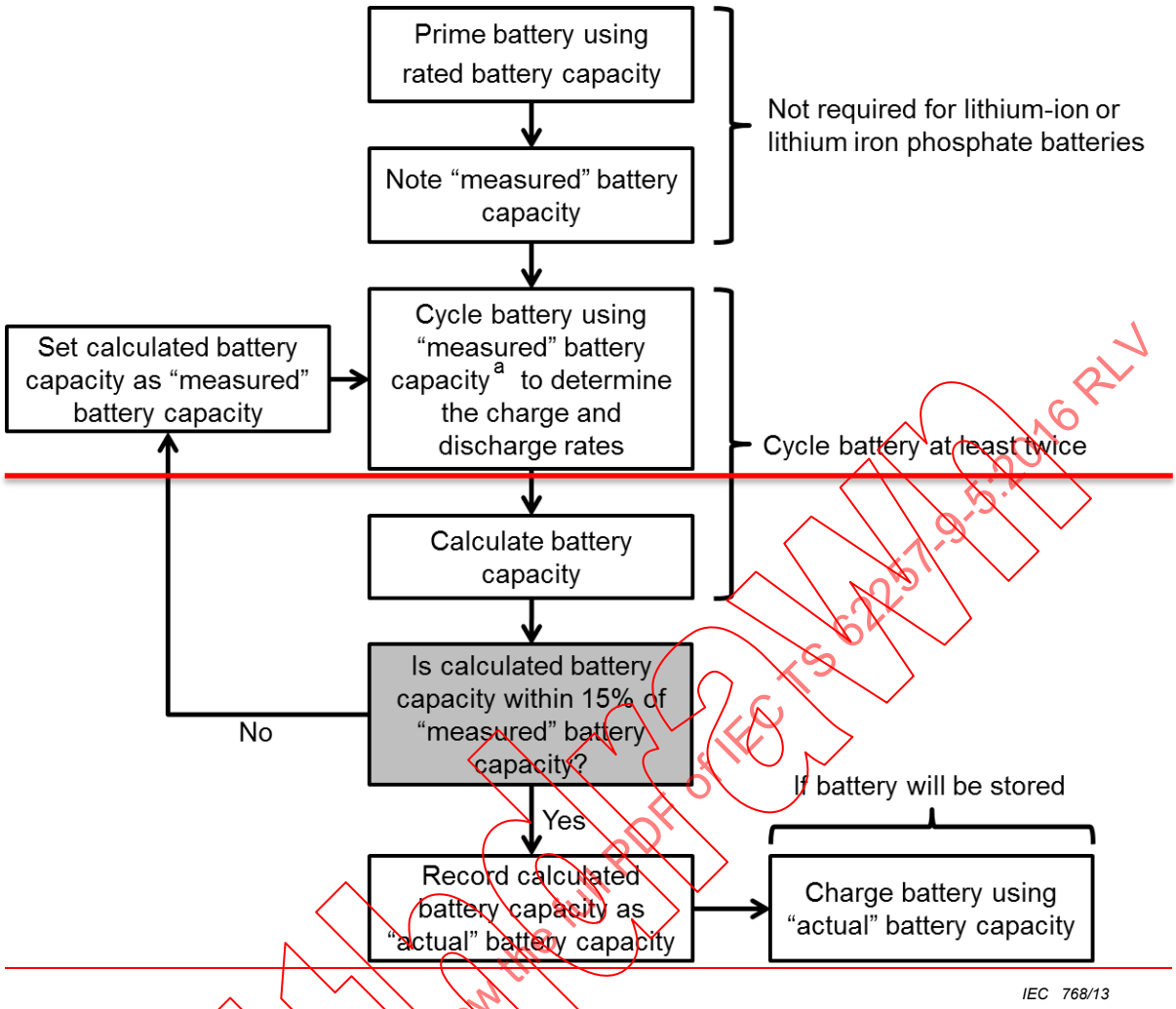

~~Key~~

~~a Use the rated battery capacity for the first cycle of lithium-ion and lithium iron phosphate batteries.~~

~~Figure L.1 – Battery testing flowchart for the battery test (Annex K)~~

L.2 Deep discharge protection specifications by battery type

Table L.1 contains recommended battery deep discharge protection voltages and minimum battery voltages ~~during testing specific to the five~~ for four common types (i.e., chemistries) of batteries. If the product or battery manufacturer has not provided an appropriate deep discharge protection voltage cutoff design value for the battery in the manufacturer self-reported information (Annex D), the information in Table L.1 may be used when determining if the DUT has appropriate deep discharge protection.

Table L.1 contains two voltage values for each battery type. The "recommended deep discharge protection voltage" is the recommended setpoint for the DUT's deep discharge protection (low voltage disconnect). The tolerance given is intended to account for measurement uncertainty both in the DUT and in the laboratory apparatus. The "minimum battery testing voltage" is intended to ensure laboratory personnel safety and prevent immediate, permanent damage to the battery. The test laboratory should immediately stop charging a battery if the battery voltage reaches the minimum testing voltage.

If the DUT does not have appropriate deep discharge protection, ~~it is possible that~~ the DUT's battery can ~~become~~ be damaged during the full-battery run time and the charge controller behaviour tests. As an option, the tester may incorporate a low-voltage disconnect device that

IECNORM.COM : Click to view the full PDF of IEC TS 62257-9-5:2016 RLV
Withdrawn

will stop a DUT's discharge when the DUT's battery reaches the minimum battery testing voltage specified in Table L.1.

Table L.1 – Recommended battery deep discharge protection voltage specifications according to battery chemistry

~~Battery type~~	~~Recommended deep discharge protection voltage V/cell~~	~~Recommended deep discharge protection voltage tolerance V/cell~~	~~Minimum battery testing voltage V/cell~~
~~Sealed lead-acid~~	~~≥ 1,87~~	~~± 0,05~~	~~none~~
~~Lithium-ion~~	~~≥ 3,00~~	~~± 0,05~~	~~2,50~~
~~Lithium iron phosphate~~	~~≥ 2,50~~	~~± 0,05~~	~~2,00~~
~~Nickel-metal hydride~~	~~= 1,00~~	~~+0,10/−0,05~~	~~0,80~~
~~Nickel-cadmium~~	~~= 1,00~~	~~+0,10/−0,05~~	~~0,80~~

Battery type	Deep discharge protection voltage V/cell			Minimum battery testing voltage V/cell
	Recommended	Minimum	Maximum	
Valve-regulated lead-acid	≥ 1,87	1,82	--	none
Lithium-ion	≥ 3,00	2,95	--	2,50
Lithium iron phosphate	≥ 2,50	2,45	--	2,00
Nickel-metal hydride	= 1,00	0,95	1,10 [a]	0,80 [b]

[a] These limits for NiMH batteries only apply to batteries with multiple cells in series. There is no personnel safety risk from discharging batteries below this limit, but there is a risk of polarity reversal, which can cause irreversible damage to the battery. There is no lower voltage limit for single-cell NiMH batteries.

[b] The intent of this upper limit is to prevent reversible capacity loss due to voltage depression ("memory effect") resulting from partial discharge.

L.3 Overcharge protection specifications by battery type

Table L.2 contains recommended battery overcharge protection voltages and maximum battery voltages~~and cell temperatures during testing~~ specific to ~~the five~~ four common types (i.e., chemistries) of batteries. If the product or battery manufacturer has not provided an appropriate overcharge protection voltage cutoff design value or maximum cell temperature design value for the battery in the manufacturer self-reported information (Annex D), the information in Table L.2 may be used when determining if the DUT has appropriate ~~deep discharge~~ overcharge protection. The maximum cell temperature should not be exceeded at any time when the battery is being charged.

Table L.2 contains two voltage values for each battery type. The "recommended overcharge protection voltage" is the recommended setpoint for the DUT's overcharge protection (overvoltage protection). The tolerance given is intended to account for measurement uncertainty both in the DUT and in the laboratory apparatus. The "maximum battery testing voltage" is intended to ensure laboratory personnel safety and prevent immediate, permanent damage to the battery. The test laboratory should immediately stop charging a battery if the battery voltage reaches the maximum testing voltage.

IECNORM.COM : Click to view the full PDF of IEC TS 62257-9-5:2016 RLV
Withdrawn

Table L.2 – Recommended battery overcharge protection voltage and temperature specifications according to battery chemistry

~~Battery type~~	~~Recommended overcharge protection voltage V/cell~~	~~Recommended overcharge protection voltage tolerance V/cell~~	~~Maximum battery testing voltage V/cell~~
~~Sealed lead-acid~~	~~= 2,40~~	~~+0,05/ -0,15~~	~~2,60~~
~~Lithium-ion~~	~~≤ 4,20~~	~~± 0,05~~	~~4,25~~
~~Lithium iron phosphate~~	~~≤ 3,65~~	~~± 0,05~~	~~3,85~~
~~Nickel-metal hydride~~	~~≤ 1,40~~	~~± 0,05~~	~~1,50~~
~~Nickel-cadmium~~	~~≤ 1,40~~	~~± 0,05~~	~~1,50~~

Battery type	Overcharge protection voltage V/cell			Maximum battery testing voltage	Maximum charging temperature
	Recommended	Minimum	Maximum	V/cell	°C
Valve-regulated lead-acid	= 2,40	2,35	2,45	2,60	45
Lithium-ion	≤ 4,20	--	4,25	4,26	45
Lithium iron phosphate	≤ 3,65	--	3,70	3,85	45
Nickel-metal hydride	≤ 1,45	--	1,50	1,51	60

IECNORM.COM : Click to view the full PDF of IEC TS 62257-9-5:2016 RLV
Withdrawn

Annex M
(normative)

Full-battery run time test

M.1 Background

The full-battery run time captures one of the key system-performance metrics from a user's perspective. It combines the relationship between battery capacity, circuit efficiency, and lighting system power consumption under realistic operating conditions.

In general terms, the full-battery run time test involves operating a DUT with a fully charged battery until the light output has decreased to some pre-defined minimum value (70 % in this case).

$$\Phi_{v,rel} = \Phi_v(t)/\Phi_v(t_i)$$

where

$\Phi_{v,rel}$ is the DUT's relative luminous flux, expressed in lumens (lm);

$\Phi_v(t)$ is the DUT's luminous flux, expressed in lumens (lm), corresponding to 70 % of the DUT's initial luminous flux;

$\Phi_v(t_i)$ is the DUT's initial luminous flux, expressed in lumens (lm).

The full-battery run time is defined as when $\Phi_{v,rel}$ reaches 70 % of the initial luminous flux $\Phi_v(t_i)$.[2)] To ensure that the DUT is measured in its thermal balance and with stabilized battery voltage (after initial voltage drop), the initial luminous flux is measured 20 min into the DUT's discharge.

M.2 Test outcomes

The test outcomes of the full-battery run time test are listed in Table M.1.

IECNORM.COM : Click to view the full PDF of IEC TS 62257-9-5:2016 RLV
Withdrawn

2) This limit was chosen since a decrease of more than 30 % is clearly visible for human eyes according to the Alliance for solid-state illumination systems and technologies (ASSIST).

Table M.1 – Full-battery run time test outcomes

Metric	Reporting units	Related aspects	Notes
Full-battery run time, to L_{70}	Hours (h)	4.2.8.5 Lighting full-battery run time	Run time to 70 % of initial light output.
Average relative light output, through L_{70}	%	4.2.9.1 Average luminous flux output 4.2.9.3 Average light distribution characteristics	The average RLO operating point determines the operating point for making light output measurements.
Average battery voltage and current at average relative light output (i.e., the "average operating point")	Voltage (V) and current (mA)	4.2.9.1 Average luminous flux output 4.2.9.3 Average light distribution characteristics	This operating point is used to make light output measurements.
Average power over the L_{70} run time	Watts (W)	4.2.8.5 Lighting full-battery run time	Average power draw over the run time while light output is over 70 % of initial light output.
Energy removed from the battery over the L_{70} run time	Watt·hours (Wh)	4.2.8.5 Lighting full-battery run time	Total energy removed over the run time while light output is over 70 % of initial light output.
Active deep discharge protection	Yes/no	4.2.3.13 Battery protection strategy	--
Deep discharge protection voltage	Volts (V)	4.2.3.13 Battery protection strategy	Measured only if the DUT has active deep discharge protection.
Passive deep discharge protection	Yes/no	4.2.3.13 Battery protection strategy	--
Passive deep discharge protection battery voltage at 24 h	Volts per cell (V/cell)	4.2.3.13 Battery protection strategy	Required only if tested for passive deep discharge protection.

M.3 Related tests

Annex M is related to the charge controller behaviour test (Annex S). The average operating point information from M.4.1.6 is used to set up the light output test (Annex I) and light distribution test (Annex T).

M.4 Procedure

M.4.1 Full-battery run time test

M.4.1.1 General

The DUT is set in the measurement cavity and turned on in order to record its light output over the duration of its discharge.

M.4.1.2 Equipment requirements

The following equipment is required. Equipment shall meet the requirements in Table CC.2.

- Integrating sphere, or other approved measurement cavity.
- Data-logging ~~light~~ illuminance meter~~, where a precision in the range of expected measurements being made is sufficient to provide ≤ 5 min resolution on run time. And the magnitude of stray light's influence on the absolute light output measurements are less than 0,5 % of the minimum light output magnitude being measured during the test.~~

IECNORM.COM : Click to view the full PDF of IEC TS 62257-9-5:2016 RLV
Withdrawn

- Battery analyser ~~with the voltage, current, and capacity measurement tolerances specified in Clause 4 of IEC 61951-2~~.
- ~~Data-logging voltage device.~~
- ~~Data-logging current device.~~
- Voltage data logger.
- Current data logger (e.g. voltage data logger and current transducer).
- Low-voltage disconnect device that will stop a DUT's discharge when the DUT's battery reaches a specified voltage (recommended).

The total series resistance added by the test apparatus and all measurement equipment shall be no more than 60 mΩ. This value includes the resistance of the wires and connectors, if any, added in the sample preparation procedure (G.4.4).

M.4.1.3 Test prerequisites

Cycle the DUT's battery according to the procedures in the battery test annex (Annex K) and the information in the battery testing recommended practices annex (Annex L).

M.4.1.4 Apparatus

The full-battery run time test requires an accurate measurement of relative light output over time. In practice, this means using an integrating sphere or a fixed-geometry measurement cavity to measure the illuminance level [3)] under constant conditions. Three approved measurement cavities are listed below in order of preference[4)].The lighting measurement is taken indirectly (reflected) in the first two types, while it is taken directly in the last type.

- Integrating sphere.
- A self-built photometer box with a baffled measurement of illuminance on a port (i.e. an "integrating cube" as shown in Figure M.1).
- A darkened room or cabinet with direct illuminance measurement under fixed geometry.

IECNORM.COM : Click to view the full PDF of IEC TS 62257-9-5:2016 RLV
Withdrawn

---

3) A measurement of illuminance in a fixed geometry (such as a dark room or isolated box) is always directly proportional in a linear fashion to the luminous flux of a lamp. Therefore, fixed-geometry measurements of illuminance may be used in place of luminous flux measurements for this test, which relies on relative light output to indicate the end of a discharge cycle.

4) Any of these cavities can result in identical estimates for full-battery run time. The preference order is related to the degree of operator care required to maintain a fixed geometry in each, with a preference for cavities whose relative measurement is less sensitive to small changes in the system (e.g. from accidentally bumping into the cavity during a test).

IEC

Figure M.1 – Interior view of photometer box with suspended light

M.4.1.5 Procedure

Before measurement, fully charge the battery ~~according to the procedures in the battery test annex (Annex K)~~ using one of the two procedures according to the DUT's battery chemistry:

- If the DUT's battery is of NiMH chemistry, then use the procedures in the battery test (Annex K) – either the overcharge or negative slope charging methods in K.4.3.1.
- If the DUT's battery is of any other chemistry, then use the procedures in the active overcharge protection test (S.4.2). If the DUT's solar module has not yet been tested, then set up the apparatus according to Figure S.1 and set the current limit to the rated maximum power point current at STC, I_{mpp}.

The run time test may be started between 1 h and 10 h after the DUT has finished receiving its full charge.

a) Set and secure the DUT inside the test cavity such that it is stable and cannot be jostled. Position the direction of light indirectly towards the ~~light~~ illuminance meter for an integrating sphere or photometer box measurement cavity. Position the direction of light directly towards the ~~light~~ illuminance meter for a darkened room/cabinet or tube measurement cavity.

b) Prepare the ~~data logging voltage device~~ voltage data logger to measure voltage across the DUT's battery terminals at intervals of 1 min or less. Prepare the ~~data logging current device~~ current data logger to measure the current exiting the DUT's battery at the negative battery terminal at intervals of 1 min or less. If it is unclear if the DUT has deep discharge protection for its battery, the tester may prepare the low-voltage disconnect device so that it stops the DUT's discharge if the DUT's battery reaches the minimum battery testing voltage specified in Annex L.

NOTE In case of pulse-width modulation (PWM) controllers, aliasing effects (beat effects) can occur due to un-synchronised PWM frequency and sampling frequency of the current logger. This can lead to "chaotic" measurements which are difficult to interpret.

c) The light is switched on at the correct brightness setting and the measurement is started. Light output (luminous flux for the integrating sphere; illuminance for other measurement devices) should be recorded every minute, at a minimum.

d) The initial light output is measured after 20 min (t_i). This defines the point at which relative light output (RLO) is 100 %. In the case where the DUT's light output cascades in steps while it discharges and the DUT's light output steps down to a dimmer setting prior to having been on for 20 min: the test lab should make a note and adjust the L_{70} discharge period to represent the setting in which the DUT was tested for.

e) The test should be continued until the RLO reaches 10 % or less (i.e. the light output measurement is 10 % of the value at t_i).

IECNORM.COM : Click to view the full PDF of IEC TS 62257-9-5:2016 RLV
Withdrawn

M.4.1.6 Calculations

Analyse the time-series light output data to estimate the L_{70} run time, the average relative light output, and the operating characteristics (voltage and current) that correspond to the average relative light output. Analyse the time-series current and voltage data to estimate the average power over the L_{70} run time and the total energy removed from the battery over the L_{70} run time.

a) The end of the L_{70} discharge period is reached when the RLO is 70 % of the initial value at ~~t_0~~ t_i (i.e., the light output is 70 %). The result shall be noted, expressed in hours (h).

b) If an integrating sphere was utilized, use the luminous flux averaged over the L_{70} run time.

c) The recorded data should be presented in a graph such as the one shown in Figure M.2 for each brightness level (Figure M.2 shows only the result of one brightness level). The graph should include the full discharge, beginning at 0 min, and may include RLO values greater than 100 %. If more than one brightness level are tested, prepare a separate graph for each test.

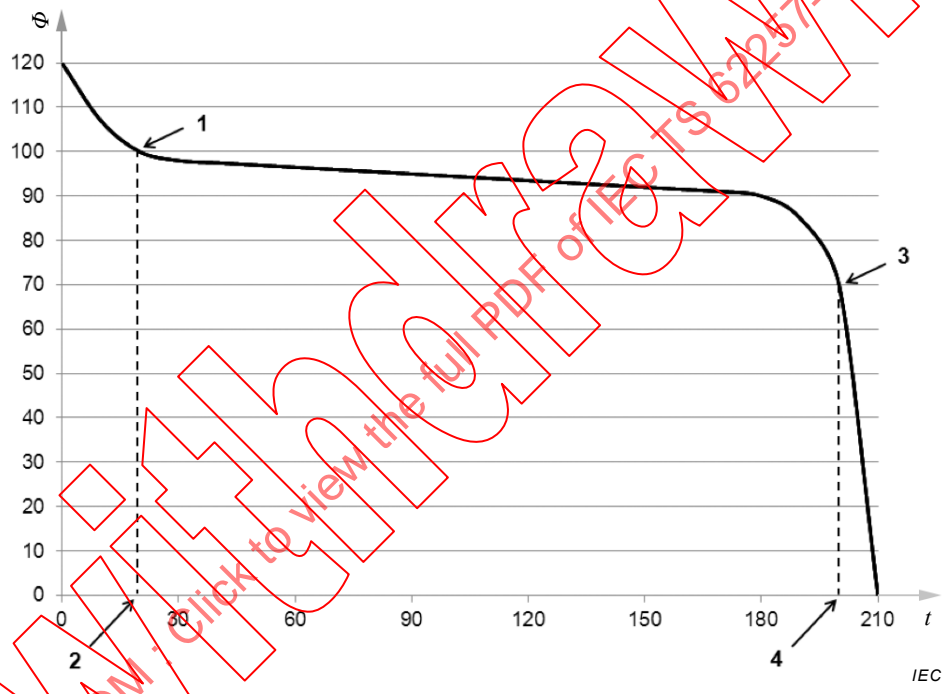

Key

t Time (min)

Φ Relative light output (%), which is directly proportional to the luminous flux output

1 20 min from point DUT is turned on

2 t_i, time when RLO is defined as 100 %

3 L_{70} reached (RLO is 70 %)

4 t_{70}, time when RLO is 70 %

Figure M.2 – Plot of example results from the full-battery run time test

d) Determine the average power over the L_{70} run time ($P_{b,i}$) using the following formula:

$$P_{b,i} = \frac{\sum_i \left(I_{b,i} \cdot V_{b,i} \right)}{n}$$

where

$P_{b,i}$ is the average power exiting the battery over the L_{70} run time, in watts (W);

IECNORM.COM : Click to view the full PDF of IEC TS 62257-9-5:2016 RLV
Withdrawn

$I_{b,i}$ is the current exiting the battery over the L_{70} run time, in amperes (A);

$V_{b,i}$ is the voltage exiting the battery over the L_{70} run time, in volts (V);

n is the total number of current and voltage measurements over the L_{70} run time (unitless).

e) Determine the energy removed from the battery over the L_{70} run time ($E_{b,i}$) using the following formula:

$$E_{b,i} = \sum_{i} \left(I_{b,i} \cdot V_{b,i} \cdot t_i \right)$$

where

$E_{b,i}$ is the energy exiting the battery over the L_{70} run time, in watt·hours (Wh);

$I_{b,i}$ is the current exiting the battery over the L_{70} run time, in amperes (A);

$V_{b,i}$ is the voltage exiting the battery over the L_{70} run time, in volts (V);

t_i is the duration of time associated with each current and voltage point over the L_{70} run time, in hours (h).

f) Determine the average relative light output during the L_{70} run time (RLO_{avg}).

g) Create a table listing the relative light output and current as a function of voltage operating point for the steady-state operating period – defined as the period beginning 20 min into the tests (when RLO is defined as 100 %) and ending at the L_{70} point. The table should list each operating voltage during the period in increments of 0,01 V. The average relative light output and average current should be found based on all the steady state points that fall into each voltage "bin."

h) Determine the operating voltage (V_{avg}) and current (I_{avg}) that correspond to the average operating point (RLO_{L70}) based on the table.

M.4.2 Full-battery run time test with deep discharge protection measurement

M.4.2.1 General

The DUT is set in the measurement cavity and switched on to run while recording its light output, battery voltage, and current over the duration of its discharge.

M.4.2.2 Equipment requirements

The following equipment is required. Equipment shall meet the requirements in Table CC.2.

- Integrating sphere, or other ~~approved measurement~~ appropriate optical cavity or dark room/closet.
- Data-logging ~~light~~ illuminance meter.
- Battery analyser ~~with an overall accuracy for voltage, current, and capacity measurements within the following tolerances~~.
  - ~~± 1 % for voltage~~
  - ~~± 1 % for current~~
  - ~~± 1 % for capacity~~
- ~~Data-logging voltage device.~~
- ~~Data-logging current device.~~
- Voltage data logger.
- Current data logger (e.g. voltage data logger and current transducer).
- Low-voltage disconnect device that will stop a DUT's discharge when the DUT's battery reaches a specified voltage (recommended).

IECNORM.COM : Click to view the full PDF of IEC TS 62257-9-5:2016 RLV

M.4.2.3 Test prerequisites

Cycle the DUT's battery according to the procedures in the battery test annex (Annex K) and the information in the battery testing recommended practices annex (Annex L).

M.4.2.4 Apparatus

The full-battery run time with ~~low-voltage disconnect (LVD)~~ deep discharge protection measurement method requires the same apparatus as the full-battery run time test (Annex M).

M.4.2.5 Procedure

The procedure for the full-battery run time test combined with deep discharge protection measurement is equivalent to the procedure for the full-battery run time test (M.4.1.5), with the addition that the DUT shall remain on until it reaches the product's LVD, the battery voltage falls below the value set on the optional low-voltage disconnect device, or the DUT continues to remain on for 24 h after it reaches its L_{70} run time. When performing this procedure, take note of the DUT's operating current, which may be used to ensure the DUT is operating at the same setting during other tests. If the low-voltage disconnect device stops the DUT's discharge during the test, record that the battery voltage reached the minimum battery testing voltage and that no deep discharge voltage was observed.

If the battery contains internal circuitry (refer to F.4.3.5) and the measured deep discharge protection voltage is outside of the targets specified by the manufacturer (D.3.2.2) or the DUT's battery falls below the recommended deep discharge protection voltage specified in Annex L, the test may be repeated with the voltage data logger connected on the battery side of the internal circuitry, if the test laboratory determines that it is safe to do so.

M.4.2.6 Calculations

Analyse the time-series light output data to estimate the L_{70} run time and the average relative light output during the period (see M.4.1.6). Analyse the time-series current and voltage data to estimate the average power over the L_{70} run time, the total energy removed from the battery over the L_{70} run time, the average relative light output during the L_{70} run time, and the operating voltage (V_{avg}) and current (I_{avg}) that correspond to the average operating point (RLO_{L70}) (see M.4.1.6). Also, determine if the DUT has active or passive deep discharge protection incorporated into its charge controller and determine the deep discharge protection voltage.

If the DUT has active deep discharge protection, one of two observations ~~may~~ will be seen: an abrupt drop will occur in the DUT's light output and current flow will quickly decrease to 0 A, or a relatively quick drop will occur in the DUT's light output and current will ultimately decrease to 0 A. At the instant before the light output reaches zero, the DUT's battery voltage is the active deep discharge protection voltage cutoff.

a) Report if active deep discharge protection was observed in the DUT.

b) If the DUT has active deep discharge protection, report the DUT's active deep discharge protection voltage, in volts (V). The battery voltage typically decreases until reaching its active deep discharge protection point. After the active deep discharge protection point is reached, typically the light turns off and the battery voltage increases. Determine the active deep discharge protection voltage by identifying the battery voltage just before the battery voltage increases.

   If the DUT does not have active deep discharge protection, the product ~~may~~ could have passive deep discharge protection. If the DUT has passive deep discharge protection, a gradual decrease will occur in the DUT's light output and current will gradually decrease to a relatively low value. If the DUT's battery voltage is greater than or equal to the selected deep discharge protection voltage (see M.4.2.5) threshold 24 h after it reaches its L_{70} run time, then the product has appropriate passive deep discharge protection.

c) Report if passive deep discharge protection was observed in the DUT.

IECNORM.COM : Click to view the full PDF of IEC TS 62257-9-5:2016 RLV

d) If the DUT has passive deep discharge protection, report the DUT's passive deep discharge protection voltage at 24 h, in volts (V). The battery voltage typically continues to decrease during the 24 hours after the DUT reaches its L_{70} run time. Determine the passive deep discharge protection voltage by identifying the battery voltage 24 h after the DUT reaches its L_{70} run time.

M.5 Reporting

Report the following in the full-battery run time test report ~~(a sample template is provided in Annex X)~~.

- Metadata:
  - report name;
  - procedure(s) used;
  - DUT manufacturer;
  - DUT name;
  - DUT model number;
  - DUT setting;
  - name of test laboratory;
  - approving person;
  - date of report approval.
- Results for tested DUT aspects for samples 1 through n:
  - run time to L_{70} (h);
  - average relative light output during the run time period (RLO_{avg});
  - average operating point that corresponds to RLO_{avg}, V_{avg} (V), and I_{avg} (mA);
  - average power over the L_{70} run time (W);
  - energy removed from the battery over the L_{70} run time (Wh);
  - presence of active deep discharge protection, if applicable (yes/no);
  - active deep discharge protection voltage, if applicable (V);
  - presence of passive deep discharge protection, if applicable (yes/no);
  - passive deep discharge protection voltage at 24 h, if applicable (V).
- Average of n sample results for each DUT aspect tested.
- Coefficient of variation of n sample results for each DUT aspect tested (%).
- DUT's rating for aspects tested, if available.
- Deviation of the average result from the DUT's rating for each aspect tested, if available (%).
- Comments:
  - individual comments, as necessary, for samples 1 through n;
  - overall comments, as necessary, for collective set of samples 1 through n.
- Figures;
  - plot showing the luminous flux (lm) against the run time (min), as in Figure M.2.
- Table showing relative light output and current as a function of operating voltage, as described above.

IECNORM.COM : Click to view the full PDF of IEC TS 62257-9-5:2016 RLV
Withdrawn

Annex N
(normative)

Full discharge preparation

N.1 Background

Prior to starting selected run time tests, a DUT shall be fully discharged. When performing the full-battery run time test (Annex M), a DUT is considered fully discharged when it reaches its L_{70}. This is the point at which the DUT provides 70 % of the initial light output. The initial light output is the light output reading taken at minute 20 of the DUT's full-battery run time.

The grid charge test (Annex O), electromechanical charge test (Annex P), and solar charge test (Annex R) use a specified charge cycle and the DUT's initial state of charge will influence the DUT's performance during the charge. It is important that the DUT be set to a prescribed state of charge to simulate a full discharge prior to commencing the selected run time tests so the results are repeatable and comparable across products.

N.2 Test outcomes

There are no full discharge preparation procedures outcomes.

N.3 Related tests

The full discharge preparation procedures shall be performed on all DUTs prior to conducting the grid charge test (Annex O), electromechanical charge test (Annex P), and solar charge test (Annex R).

N.4 Procedure

N.4.1 General

Each DUT is fully discharged prior to starting selected run time tests.

N.4.2 Equipment requirements

One of the following two pieces of equipment is required for the full discharge preparation. Equipment shall meet the requirements in Table CC.2.

a) Battery analyser with the voltage, current, and capacity measurement tolerances specified in Clause 4 of IEC 61951-2:2011.

b) ~~Digital timer with a precision of at least 2 min~~ Timer disconnect device consisting of a digital timer and a relay that can break the connection between the DUT's circuit and its battery (e.g. an AC digital timer combined with an AC-actuated mechanical relay).

N.4.3 Test prerequisites

~~Each DUT is fully charged according to the procedures and information in the battery test (Annex K). The full battery run time of the DUT is known from the results of the full battery run time test (Annex M).~~

Before measurement, fully charge the battery using one of the two procedures according to the DUT's battery chemistry.

IECNORM.COM : Click to view the full PDF of IEC TS 62257-9-5:2016 RLV
Withdrawn

- If the DUT's battery is of NiMH chemistry, then use the procedures in the battery test (Annex K) – either the overcharge or negative slope charging methods in K.4.3.1.
- If the DUT's battery is of any other chemistry, then use the procedures in the active overcharge protection test (S.4.2). If the DUT's solar module has not yet been tested, then set up the apparatus according to Figure S.1 and set the current limit to the rated maximum power point current at STC, I_{mpp}.

Any following steps may be started between 1 h and 10 h after the DUT has finished receiving its full charge.

N.4.4 Procedure

N.4.4.1 General

Products generally have one of five types of discharge curves.

a) A constant light output with a sharp turn-off when the product reaches its low-voltage disconnect (LVD) such that the light output does not drop below the L_{70} prior to turning off.

b) A relatively constant light output that begins to decrease in light output just prior to experiencing a sharp turn-off when the product reaches its LVD such that the light output does drop below the L_{70} prior to turning off.

c) A cascade of constant light outputs such that the product steps down in its light setting during its discharge, often reaching an LVD after providing some light in its lowest setting.

d) A gradually decreasing light output as the product discharges, reaching an LVD after hitting its L_{70}.

e) A gradually decreasing light output as the product discharges with no LVD.

If the product discharges as type a), proceed with procedure A (N.4.4.2). If the product discharges as type b), c), d), or e), proceed with either procedure B1 (N.4.4.3) or procedure B2 (N.4.4.4).

N.4.4.2 Procedure A

The following steps shall be followed.

a) Set the DUT in a secure location.

b) Turn the DUT on in the setting that it will be tested in for the selected run time test.

c) Allow the DUT to discharge uninterrupted until its LVD automatically turns it off.

d) After the DUT finishes discharging, wait at least 60 min prior to commencing the selected run time test.

N.4.4.3 Procedure B1

The following steps shall be followed.

a) Calculate the average discharge current measured from the DUT's battery during its full-battery run time test (Annex M) until it reached its L_{70} in the particular setting that it will be tested in for the selected run time test.

b) Set the DUT on the battery analyser such that it discharges at the average discharge current calculated in step a) for the duration of its full-battery run time (Annex M) until it reached L_{70} in the particular setting that it will be tested in for the selected run time test.

c) After the DUT finishes, wait at least 60 min prior to commencing the selected run time test.

N.4.4.4 Procedure B2

The following steps shall be followed.

IECNORM.COM : Click to view the full PDF of IEC TS 62257-9-5:2016 RLV
Withdrawn

a) Determine the time that the DUT reached its L_{70} during its full-battery run time test (Annex M) in the particular setting that it will be tested in for the selected run time test.

b) Program the timer for the duration of its full-battery run time (Annex M) until it reached L_{70} in the particular setting that it will be tested in for the selected run time test.

c) Connect the DUT to the timer device such that the timer device relay will disconnect the DUT circuit from the battery upon reaching the programmed discharge time. Turn the DUT on in the setting to be tested for the selected run time test.

d) After the DUT finishes, wait at least 60 min prior to commencing the selected run time test.

N.4.5 Calculations

No calculations are required with the full discharge preparation procedures.

N.5 Reporting

No reporting is required with the full discharge preparation procedures.

Withdrawn
IECNORM.COM : Click to view the full PDF of IEC TS 62257-9-5:2016 RLV

Annex O
(normative)

Grid charge test

O.1 Background

The possibility of grid charging improves the usability of an LED lighting product, even if it is designed for use in remote areas. This module describes the method for measuring the grid-charge run time of the lighting product.

The DUT is grid charged via the provided power adapter for 8 h.

O.2 Test outcomes

The test outcomes of the grid charge test are listed in Table O.1.

Table O.1 – Grid charge test outcomes

Metric	Reporting units	Related aspects	Notes
Grid-charge run time	Hours (h)	4.2.8.6 Grid-charge run time	--

O.3 Related tests

The grid charge test requires the full-battery run time test (Annex M) to be performed before the test. Also, if the charge controller behaviour test (Annex S) is performed before the grid charge test and it is determined the DUT has overcharge protection, no overcharge protection device is required during the grid charge test.

O.4 Procedure

O.4.1 General

The DUT sample is charged by the grid for 8 h to determine the DUT's grid charge run times.

O.4.2 Equipment requirements

The following equipment is required. Equipment shall meet the requirements in Table CC.2.

- AC power adapter supplied with the DUT.
- ~~Data-logging voltage device.~~
- ~~Data-logging current device.~~
- Voltage data logger.
- Current data logger (e.g. voltage data logger and current transducer).
- ~~Circuit cutoff~~ Timer disconnect device ~~with timer~~.
- Overcharge disconnect device (if necessary).
- Surface-mounted thermocouple(s) and a thermocouple reader ~~with a precision less than 2 °C~~ (optional).

IECNORM.COM : Click to view the full PDF of IEC TS 62257-9-5:2016 RLV

O.4.3 Test prerequisites

The following steps shall be followed.

a) The DUT battery should be discharged according to the full discharge preparation procedure (Annex N).

b) If it is unknown whether the DUT has an overcharge protection disconnect, an overcharge protection disconnect device should be used to protect the battery during the test.

c) Check that the grid voltage is suitable for the DUT's supplied AC power adapter.

O.4.4 Apparatus

A suitable location for the DUT to be undisturbed for 8 h while grid charging is required.

O.4.5 Procedure

The following steps shall be followed.

a) Set up the circuit cutoff device to disconnect the AC power circuit after 8 h of testing.

b) If it is unknown whether the DUT has an overcharge protection disconnect, integrate the overcharge protection disconnect device into the setup. ~~The maximum allowable voltage setpoint for the overcharge disconnect device may be selected from Table L.2.~~ Optionally, monitor the DUT's battery temperature to ensure that it does not exceed ~~45 °C~~ a safe value. The maximum allowable voltage setpoint for the overcharge disconnect device and the maximum allowable cell temperature may be selected from Table L.2. If temperature monitoring is used, lithium-based batteries shall not be allowed to exceed 45 °C unless higher temperatures are allowed by the battery manufacturer.

c) Plug the AC power adapter supplied with the DUT into the circuit cutoff device.

d) Set up the current and voltage sensors to monitor the charge into the battery and set data logging for one minute intervals or shorter.

e) Enable the circuit and begin the 8 h charging cycle.

f) After 8 h of grid charging, disconnect the equipment and check for data consistency.

O.4.6 Calculations

The following calculations shall be made:

a) Find the instantaneous power for each data point by multiplying current and voltage.

b) Find the total energy input to the battery during the 8 h charging cycle by multiplying each instantaneous power by the time step duration and summing the energy.

c) Find the grid-charge run time for each setting with the formula below:

$$t_{\text{grid,s}} = \min\left(\frac{E_{\text{grid}} \cdot \eta_{\text{batt}}}{P_{\text{FBR,s}}}, t_{\text{FBR,s}}\right)$$

where

$t_{\text{grid,s}}$ is the grid-charge run time on setting "s" in hours (h);

E_{grid} is the total energy input to the battery during the grid charge in watt·hours (Wh);

η_{batt} is the battery efficiency as a fraction;

$P_{\text{FBR,s}}$ is the average power during the full-battery run time for setting "s" in watts (W);

$t_{\text{FBR,s}}$ is the full-battery run time in hours (h).

IECNORM.COM : Click to view the full PDF of IEC TS 62257-9-5:2016 RLV
Withdrawn

O.5 Reporting

Report the following in the grid charge test report ~~(a sample template is provided in Annex X)~~.

- Metadata:
  - report name;
  - procedure(s) used;
  - DUT manufacturer;
  - DUT name;
  - DUT model number;
  - name of test laboratory;
  - approving person;
  - date of report approval.
- Results for tested DUT aspects for samples 1 through n:
  - grid-charge run time to L_{70} (h).
- Comments:
  - individual comments, as necessary, for samples 1 through n;
  - overall comments, as necessary, for collective set of samples 1 through n.

Withdrawn
IECNORM.COM : Click to view the full PDF of IEC TS 62257-9-5:2016 RLV

Annex P
(normative)

Electromechanical charge test

P.1 Background

A number of lighting products provide mechanical crank-charging as an alternative to grid and/or PV module charging.

Annex P describes a procedure for measuring the energy generated by electromechanical charging under predetermined conditions.

P.2 Test outcomes

The test outcomes of the electromechanical charge test are listed in Table P.1.

Table P.1 – Mechanical charge test outcomes

Metric	Reporting units	Related aspects	Notes
Electromechanical charger power rating	Watts (W)	4.2.8.7 Electromechanical charge ratio	--
Electromechanical charging ratio	Unitless (minutes of run time per minute of charging)	4.2.8.7 Electromechanical charge ratio	--

P.3 Related tests

The electromechanical charge test requires the full-battery run time test (Annex M) to be performed before the test.

P.4 Procedure

P.4.1 General

The DUT sample is electromechanically crank-charged for 5 min at approximately 120 rpm with measurements of the current and voltage available to charge the battery.

P.4.2 Equipment requirements

The following equipment is required. Equipment shall meet the requirements in Table CC.2.

- ~~Sensors to measure battery current and voltage with data logging.~~
- Voltage data logger.
- Current data logger.
- Stopwatch or clock.

IECNORM.COM : Click to view the full PDF of IEC TS 62257-9-5:2016 RLV
Withdrawn

P.4.3 Test prerequisites

The DUT battery should be discharged according to full discharge preparation procedure (Annex N).

P.4.4 Apparatus

No particular apparatus is required. For electromechanical chargers that require a fixed position (e.g. bicycle crank chargers), a special apparatus may need to be built or used.

P.4.5 Procedure

The following steps shall be followed.

a) Attach the voltage and current sensors to the product to measure charge into the battery. Set the data-logging interval for 2 s or less and begin logging.

b) Crank-charge the DUT for 5 min at approximately 120 rpm, resulting in approximately 600 total crank rotations.

c) Download the data and check for consistency.

P.4.6 Calculations

The following calculations shall be made.

a) Find the actual duration of the time series according to the dataset.

b) Calculate the instantaneous power input to the battery for each data point in the time series by multiplying current and voltage.

c) Find the average power input over the charging period.

d) Estimate the electromechanical charging ratio for each product setting tested with the formula below:

$$R_s = \frac{\eta_{batt} \cdot P_{FBR,s}}{P_{mech}}$$

where

R_s is the electromechanical run time to charging ratio on setting "s";

η_{batt} is the battery efficiency;

$P_{FBR,s}$ is the average power during the full-battery run time for setting "s";

P_{mech} is the average power during the electromechanical charging period.

P.5 Reporting

Report the following in the electromechanical charge test report ~~(a sample template is provided in Annex X)~~.

- Metadata:
  - report name;
  - procedure(s) used;
  - DUT manufacturer;
  - DUT name;
  - DUT model number;
  - name of test laboratory;
  - approving person;
  - date of report approval.

IECNORM.COM : Click to view the full PDF of IEC TS 62257-9-5:2016 RLV
Withdrawn

- Results for tested DUT aspects for samples 1 through n:
  - electromechanical charger power;
  - electromechanical charge ratio for each product setting of interest.
- Comments:
  - individual comments, as necessary, for samples 1 through n;
  - overall comments, as necessary, for collective set of samples 1 through n.

Withdrawn
IECNORM.COM : Click to view the full PDF of IEC TS 62257-9-5:2016 RLV

Annex Q
(normative)

~~Outdoor~~ Photovoltaic module I-V characteristics test

Q.1 Background

The purpose of the outdoor photovoltaic (PV) module I-V characteristics test is to validate the DUT manufacturer's PV module data (if available) and determine the PV module's I-V characteristic curve under standard test conditions (STC) and typical module operating temperatures (TMOT).

Solar LED lamp units are often powered by PV modules having a power range from approximately 0,3 W to 10 W.[5)] When selecting a measurement instrument, it is important to ensure that it is able to make accurate measurements of modules in the desired size range. This is particularly important for modules rated at less than 3,0 W since most measurement equipment is not designed for very small modules.

The PV module may be measured with a solar simulator in accordance with IEC 60904-1 and corrected for TMOT with IEC 60891:2009. This is the preferred technique for characterizing PV modules and laboratories with access to a solar simulator should use this procedure.

The test may also be performed with an instrument that is designed to make outdoor performance measurements of small solar modules.

Q.2 Test outcomes

The test outcomes of the outdoor photovoltaic module I-V characteristics test are listed in Table Q.1.

Table Q.1 – Outdoor photovoltaic module I-V characteristics test outcomes

Metric	Reporting units	Related aspects	Notes
Short-circuit current (I_{sc}) at STC	Amperes (A)	4.2.6.1 Solar I-V curve parameters	Report at STC
Open-circuit voltage (V_{oc}) at STC	Volts (V)	4.2.6.1 Solar I-V curve parameters	Report at STC
Maximum power point power (P_{mpp}) at STC	Watts (W)	4.2.6.1 Solar I-V curve parameters	Report at STC
Maximum power point current (I_{mpp}) at STC	Amperes (A)	4.2.6.1 Solar I-V curve parameters	Report at STC
Maximum power point voltage (V_{mpp}) at STC	Volts (V)	4.2.6.1 Solar I-V curve parameters	Report at STC
Short-circuit current ($I_{sc,TMOT}$) at TMOT	Amperes (A)	4.2.6.1 Solar I-V curve parameters	Report at TMOT
Open-circuit voltage ($V_{oc,TMOT}$) at TMOT	Volts (V)	4.2.6.1 Solar I-V curve parameters	Report at TMOT
Maximum power point power ($P_{mpp,TMOT}$) at TMOT	Watts (W)	4.2.6.1 Solar I-V curve parameters	Report at TMOT
Maximum power point current ($I_{mpp,TMOT}$) at TMOT	Amperes (A)	4.2.6.1 Solar I-V curve parameters	Report at TMOT

5) This is the nominal power a PV module shows under standard test conditions (STC). Since being at STC is extremely rare in practice, the achieved power is usually lower.

IECNORM.COM : Click to view the full PDF of IEC TS 62257-9-5:2016 RLV
Withdrawn

Metric	Reporting units	Related aspects	Notes
Maximum power point voltage ($V_{mpp,TMOT}$) at TMOT	Volts (V)	4.2.6.1 Solar I-V curve parameters	Report at TMOT
Temperature coefficient	Per degree Celsius (1/°C)	4.2.6.1 Solar I-V curve parameters	Based on temperature variation in $V_{oc.}$
STC I-V Curve dataset	Volts (V), Amperes (A)	4.2.6.1 Solar I-V curve parameters	Delimited dataset

Q.3 Related tests

Annex Q should be completed before the solar charge test (Annex R).

Q.4 Procedure

~~Q.4.1 Test programme using indoor (simulated measurements)~~

~~Q.4.1.1 I-V curve measurements~~

~~Use standard IEC 60904-1.~~

~~Q.4.1.2 I-V curve adjustment for TMOT~~

~~Use standard IEC 60891, where TMOT is defined as 50 °C cell temperature, solar irradiance of 1 000 W/m^2, and air mass 1,5.~~

Q.4.1 Testing using IEC 61215 (all parts)

The I-V characteristics of the DUT's PV module may be determined using the "Performance at STC and NMOT" test of IEC 61215-2. Test results provided by the manufacturer of the DUT may be accepted if the tests were performed at a laboratory accredited to perform the tests by a recognized accrediting organization (e.g. ILAC) and if the test results include full datasets for the I-V curves.

If the module's nominal module operating temperature (NMOT), as determined in IEC 61215-2, is within the range 50 °C ± 5 °C, the performance at TMOT may be assumed to be identical to the performance at NMOT. Otherwise, the I-V curve at TMOT (50 °C cell temperature, solar irradiance of 1 000 W/m^2, and air mass 1,5) shall be calculated from the performance at STC and NMOT using any of the correction procedures in IEC 60891:2009. Correction procedure 3 (IEC 60891:2009, 3.4) is recommended as it requires no additional measurements other than the two I-V curves.

Q.4.2 Test programme using a solar simulator

Q.4.2.1 Test prerequisites

If the PV module is amorphous silicon or otherwise could be subject to degradation (e.g. because it is thin film or of unknown technology), it shall sun-soak for 30 days prior to performing this test.

Q.4.2.2 I-V curve measurements

Use the procedure defined in IEC 60904-1:2006, with the following modifications.

- The spectral mismatch correction described in IEC 60904-1:2006, Clause 3 a), may be omitted if the reference device is a PV cell or module made using the same cell technology or using optical filtration to achieve a spectral response typical of the cell

IECNORM.COM : Click to view the full PDF of IEC TS 62257-9-5:2016 RLV
Withdrawn

technology of the DUT. For example, a monocrystalline PV cell with KG5 glass window may be used with an amorphous silicon DUT.

- For measurements in steady-state simulated sunlight, the irradiance sensor of IEC 60904-1:2006, 4.2 d), may be omitted.
- For temperature measurements, a single thermocouple, meeting the accuracy requirements of Q.4.3.2 and positioned directly behind a cell near the centre of the module, may be used. If the back of the module is inaccessible, the front-mounted thermocouple procedure detailed in the outdoor test procedure (Q.4.3.5.3) shall be used for the indoor test.
- If the PV module charges the DUT via a cable extended from the PV module's junction box, measure the I-V curve from the end of the cable that plugs into the DUT for charging by cutting the connector from the end of the PV module cable, leaving as much of the cable connected to the PV module as possible, and strip the wire ends. However, if the PV module's performance deviates from the advertised values by more than the truth-in-advertising tolerance specified in the product specification, the I-V curve test may be repeated measuring the I-V curve from the PV module's junction box (before the PV module's charging cable). The results from the original test shall be used as input for the solar charge test and results from the repeated test shall be reported for the photovoltaic module I-V characteristics test.

Q.4.2.3 I-V curve adjustment for STC and TMOT

The I-V curve measured in Q.4.2.1 shall be adjusted to STC (25 °C cell temperature, solar irradiance of 1 000 W/m^2, and air mass 1,5) and TMOT (50 °C cell temperature, solar irradiance of 1 000 W/m^2, and air mass 1,5) using either of the following two procedures, ensuring that all voltage measurements are taken with the same device and all temperature measurements are taken with the same device:

Procedure 1: Use any of the correction procedures defined in IEC 60891:2009. For temperature coefficient measurements, a single thermocouple, meeting the accuracy requirements of Annex CC and positioned directly behind a cell near the centre of the module, may be used. If the back of the module is inaccessible, the front-mounted thermocouple procedure detailed in the outdoor test procedure (Q.4.3.5.3) shall be used.

NOTE Correction procedure 3 (IEC 60891:2009, 3.4) allows temperature correction using two I-V curves at different temperatures. If no irradiance correction is needed, this method is likely to be the simplest for a low-cost test.

Procedure 2: Measure the temperature coefficient of voltage ($T_{c,voc}$) using the procedure defined in Q.4.3, under either natural or simulated sunlight, then use the calculations in Q.4.3.5.4 to adjust the curve to STC and TMOT.

Q.4.3 Outdoor photovoltaic module I-V characteristics test

Q.4.3.1 General

The PV module is tested outdoors to obtain its characteristic I-V curve, from which the maximum power (P_{mpp}), open-circuit voltage (V_{oc}), and short-circuit current (I_{sc}) ~~may be~~ are determined.

Q.4.3.2 Equipment requirements

The following equipment is required. Equipment shall meet the requirements in Table CC.2.

- Outdoor I-V curve analyser. ~~A current measuring range of up to 2 A and a voltage measuring range of up to 60 V is generally acceptable. The basic measurement uncertainty should be less than or equal to 0,5 % of the measuring range. The analyser may include an integrated pyranometer, provided it is a fast-response (i.e., silicon PV-based pyranometer with less than 5 % error).~~ The analyser may include an integrated pyranometer, provided it is fast-response (i.e. silicon PV-based pyranometer).

IECNORM.COM : Click to view the full PDF of IEC TS 62257-9-5:2016 RLV
Withdrawn

- Fast-response (i.e., silicon PV-based) pyranometer ~~with less than 5 % error~~.
- ~~Voltage meter or multimeter with a basic measurement uncertainty less than or equal to 0,5 % of the measuring range.~~
- Voltmeter or multimeter.
- Surface-mounted thermocouple(s) and a thermocouple reader ~~with a precision less than 2 °C~~.

Q.4.3.3 Test prerequisites

The following prerequisites shall be met.

- Constant atmospheric conditions (i.e. a clear, sunny day with no clouds).
- Incident solar ~~radiation~~ irradiance between 850 W/m^2 and 1 150 W/m^2 and an ambient temperature between 15 °C and 35 °C.
- Air mass less than or equal to 2.
- If the PV module is amorphous silicon or otherwise ~~may~~ could be subject to degradation (e.g. because it is thin film or of unknown technology), it shall sun-soak for 30 days prior to performing this test.

Q.4.3.4 Apparatus

There should be an appropriate stand to hold the PV module and pyranometer in the same plane, directly normal to the sun. The PV module should be placed as close as possible to the pyranometer to ensure that each device "sees" the same sky view. A sighting tube with bracket may be used to ensure the stand is directly normal to the sun (Figure Q.1).

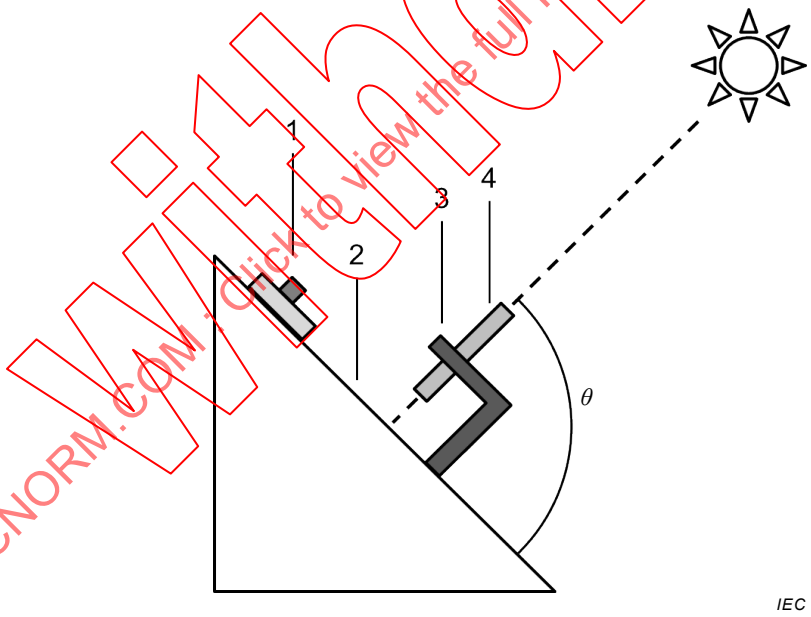

Key

1 Pyranometer
2 Board or other flat surface
3 Bracket
4 Sighting tube
θ 90°

Figure Q.1 – PV module I-V curve testing rack

IECNORM.COM : Click to view the full PDF of IEC TS 62257-9-5:2016 RLV

Q.4.3.5 Procedure

Q.4.3.5.1 General

Determine the appropriate thermocouple mounting technique based on PV panel configuration. If the PV module is separate from the lighting product or can be easily removed without damaging the active PV material and the back of the PV module is accessible, use the back-mounted thermocouple procedure (Q.4.3.5.2). Otherwise, use the front-mounted thermocouple procedure (Q.4.3.5.3).

Procedure 1 of Q.4.2.3 may be used as an alternative means to adjust the I-V curve to STC and TMOT (as opposed to using the methods provided below in Q.4.3.5.2 and Q.4.3.5.3). This would involve taking I-V curve measurements at two different module temperatures rather than only taking I-V curve measurements when the module has reached thermal equilibrium after warming under natural sunlight. When using procedure 1 of Q.4.2.3, it is acceptable to use step a) in Q.4.3.5.4 to adjust all measured curves to an irradiance value of 1000 W/m^2.

Q.4.3.5.2 Back-mounted thermocouple

The following steps shall be followed.

a) Before the PV module is exposed to sunlight, do the following:

   1) cut the connector from the end of the PV module cable, leaving as much of the cable connected to the PV module as possible, and strip the wire ends;

   2) connect a voltage meter or multimeter (DC voltage range) to the PV module.

b) Fix the thermocouple to the back of the PV module directly behind a cell near the centre of the active area and affix insulating material (e.g. foil-backed foam tape) over the thermocouple.

c) Expose the PV module to direct normal sunlight and immediately measure and record the open-circuit voltage ($V_{oc,1}$) and the PV module temperature (T_1).

d) Leave the PV module in direct normal sunlight until thermal equilibrium is reached (i.e. the PV module temperature is not changing by more than 1 °C/min).

e) Connect the PV module to the I-V curve analyser per the I-V curve analyser's manufacturer's instructions.

f) Execute the I-V measurement per the I-V curve analyser's manufacturer's instructions and record the PV module temperature (T) and incident solar ~~radiation~~ irradiance.

g) After the I-V curve measurement, measure and record the PV module temperature again (T_2) using the same instrument that was used in step a).

h) Measure the record the PV module's open-circuit voltage at T_2 ($V_{oc,2}$) using the same instrument that was used in step a).

Q.4.3.5.3 Front-mounted thermocouple

The following steps shall be followed.

a) Before the PV module is exposed to sunlight, do the following:

   1) connect a voltage meter or multimeter (DC voltage range) to the PV module.

b) Fix the thermocouple to the front of the PV module directly over a cell in the centre of the active area and affix insulating material (e.g. foil-backed foam tape) over the thermocouple.

c) Expose the PV module to direct normal sunlight and immediately measure and record the PV module temperature (T_1), then quickly remove the thermocouple and insulating material from the front of the PV module, and measure and record the open-circuit voltage ($V_{oc,1}$).

IECNORM.COM : Click to view the full PDF of IEC TS 62257-9-5:2016 RLV
Withdrawn

d) After measuring ($V_{oc,1}$), again fix the thermocouple to the front of the PV module directly over a cell in the centre of the active area in the same location as before and affix insulating material (e.g. foil-backed foam tape) over the thermocouple.

e) Leave the PV module in direct normal sunlight until thermal equilibrium is reached (i.e. the PV module temperature is not changing by more than 1 °C/min).

f) Connect the PV module to the I-V curve analyser per the I-V curve analyser's manufacturer's instructions.

g) Remove the thermocouple.

h) Measure and record the PV module's open-circuit voltage at T_2 ($V_{oc,2}$) using the same instrument that was used in step a).

i) Immediately after obtaining $V_{oc,2}$, affix the thermocouple and insulating material to the front of the PV module (i.e. the same place as in step a)) and measure and record the temperature of the PV module (T_2 and T) using the same instrument that was used in step a).

j) Immediately execute the I-V measurement per the I-V curve analyser's manufacturer's instructions.

Q.4.3.5.4 Calculations

The following calculations shall be made, unless temperature adjustments are being performed using procedure 1 of Q.4.2.3. If procedure 1 of Q.4.2.3 is being used, the current measurements may be converted to 1 000 W/m^2 using step a).

a) Convert all of the current measurements to STC using the following formula:

$$I = I_m \times \frac{1\,000\ \text{W/m}^2}{G}$$

where

I is the PV module's current at STC, in amperes (A);

I_m is the PV module's measured current, in amperes (A);

G is the measured incident solar ~~radiation~~ irradiance during the I-V curve measurement, in watts per square metre (W/m^2).

b) Determine the temperature coefficient for the voltage ($T_{c,voc}$) using the following formula:

$$T_{c,voc} = \frac{\left(V_{oc,1} - V_{oc,2}\right)/V_{oc,2}}{T_1 - T_2}$$

where

$T_{c,voc}$ is the PV module's temperature coefficient for the voltage, per degree Celsius (1/°C);

$V_{oc,1}$ is the PV module's open-circuit voltage immediately after exposure to sunlight, in volts (V);

$V_{oc,2}$ is the PV module's open-circuit voltage after the I-V measurement is taken, in volts (V);

T_1 is the PV module's temperature immediately before exposure to sunlight, in degrees Celsius (°C);

T_2 is the PV module's temperature after the I-V curve measurement is taken, in degrees Celsius (°C).

c) Convert all of the voltage measurements to STC using the following formula:

$$V = V_m\left[1 + T_{c,voc}\left(T_{stc} - T\right)\right]$$

where

V is the PV module's voltage at STC, in volts (V);

IECNORM.COM : Click to view the full PDF of IEC TS 62257-9-5:2016 RLV
Withdrawn

V_m is the PV module's measured voltage, in volts (V);

$T_{c,voc}$ is the PV module's temperature coefficient for the voltage, per degree Celsius (1/°C);

T_{stc} is the temperature at STC, 25 °C;

T is the PV module's temperature during the I-V curve measurement, in degrees Celsius (°C).

d) The PV module's short-circuit current at STC (I_{sc}) is the current corresponding to 0 V on the STC-adjusted I-V curve.

e) The PV module's open-circuit voltage at STC (V_{oc}) is the voltage corresponding to 0 A on the STC-adjusted I-V curve.

f) Determine the PV module's measured maximum power point power at STC (P_{mpp}) using the following formula:

$$P_{mpp} = \max\left(I \cdot V\right)$$

where

P_{mpp} is the PV module's measured maximum power point power at STC, in watts (W);

I is the PV module's current at STC, in amperes (A);

V is the PV module's voltage at STC, in volts (V).

g) The PV module's maximum power point current at STC (I_{mpp}) is the current corresponding to P_{mpp} on the STC-adjusted I-V curve.

h) The PV module's maximum power point voltage at STC (V_{mpp}) is the voltage corresponding to P_{mpp} on the STC-adjusted I-V curve.

i) Repeat steps c) through h) for TMOT in place of STC, where TMOT is defined as 50 °C.

Q.5 Reporting

Report the following in the outdoor photovoltaic module I-V characteristics test report ~~(a sample template is provided in Annex X)~~.

- Metadata:
  - report name;
  - procedure(s) used;
  - lighting product manufacturer;
  - lighting product name;
  - lighting product model number;
  - name of test laboratory;
  - description of location of test;
  - approving person;
  - date of report approval.
- Results for tested PV module aspects for samples 1 through n:
  - short-circuit current at STC (A);
  - open-circuit voltage at STC (V);
  - maximum power point power at STC (W);
  - maximum power point current at STC (A);
  - maximum power point voltage at STC (V);
  - short-circuit current at TMOT (A);
  - open-circuit voltage at TMOT (V);

IECNORM.COM : Click to view the full PDF of IEC TS 62257-9-5:2016 RLV
Withdrawn

  - maximum power point power at TMOT (W);
  - maximum power point current at TMOT (A);
  - maximum power point voltage at TMOT (V);
  - temperature coefficient for voltage (1/°C).
- Average of n sample results for each PV module aspect tested.
- Coefficient of variation of n sample results for each PV module aspect tested (%).
- PV module's rating for aspects tested, if available.
- Deviation of the average result from the PV module's rating for each aspect tested, if available (%).
- Comments:
  - individual comments, as necessary, for samples 1 through n;
  - overall comments, as necessary, for collective set of samples 1 through n.
- Figures:
  - single plot showing the I-V and power-voltage curves for every PV module sample.
- Datasets:
  - comma-delimited or tabular dataset listing current (A) and voltage (V) adjusted to STC across the full measured I-V curve.

Withdrawn
IECNORM.COM : Click to view the full PDF of IEC TS 62257-9-5:2016 RLV

Annex R
(normative)

Solar charge test

R.1 Background

The solar charge test provides estimates for two key sources of energy loss during solar charging: suboptimal operation of the solar module ("solar operation efficiency") and losses from the DUT's internal electronic circuits that charge the battery(-ies) ("battery-charging circuit efficiency"). Along with the battery ~~charge~~ round-trip energy efficiency (Annex K), these values are used in the daily energy service calculations (Annex GG) and/or the solar run time calculation (R.4.4).

A power supply along with two resistors is used to simulate a solar module and charge a DUT's battery(-ies). The voltage operating point during the test combined with the solar I-V curve is used to calculate the solar operating efficiency. Measurements of energy input to the DUT solar charging port and DUT battery(-ies) are used to estimate the battery-charging circuit efficiency.

If the DUT is a kit that has multiple independent light units (each with their own battery pack) that can be charged simultaneously by a single solar module, the test should be done with all the independent light units connected at once. This will require additional measurements of battery current and voltage for each battery.

R.2 Test outcomes

The test outcomes of the solar charge test are listed in Table R.1.

Table R.1 – Solar charge test outcome

Metric	Reporting units	Related aspects	Note
Solar operation efficiency ($\eta_{sol\text{-}op}$)	Percentage	4.2.6 Solar module aspects	This is representative of the efficiency with respect to optimal operation of the PV module (where optimal operation is at the maximum power point).
Battery-charging circuit efficiency (η_{bcc})	Percentage	4.2.10 Battery-charging circuit efficiency	This is a lump figure for the whole lighting kit and is not disaggregated by lighting unit.
Average charging voltage	V	n/a	This value is used in the assessment of DC ports (Annex EE) when a typical charging voltage is needed.
Solar run time (standard solar day)	Hours (h)	4.2.8.3 Solar-day lighting run time	Multiple outcomes will be found – one for each setting on each independent lighting unit.
Solar charging system characteristics	n/a	n/a	This describes key features of the solar charging circuit

R.3 Related tests

The solar charge test is related to the battery test (Annex K), the outdoor photovoltaic module I-V characteristics test (Annex Q), the full-battery run time test (Annex M), and the energy service calculations (Annex GG).

IECNORM.COM : Click to view the full PDF of IEC TS 62257-9-5:2016 RLV

R.4 Procedure

R.4.1 General

~~The current and voltage from an electronics setup that simulates a solar module and into the DUT battery(-ies) are recorded at 1 min or shorter intervals.~~

In this test, the DUT is charged using an apparatus to simulate the PV module during a typical day of solar charging. The PV simulation shall be performed using a resistor network and programmable laboratory power supply or a solar array simulator meeting the requirements of Table CC.2. The voltage and current at the DUT's PV input and battery(-ies) are recorded at one-minute or shorter intervals.

R.4.2 Test method using a resistor network

R.4.2.1 Equipment requirements

The following equipment is required. Equipment shall meet the requirements in Table CC.2.

- Programmable power supply with constant-voltage and constant-current modes and ability to automatically step through a timed program, or alternative apparatus described below.
- ~~Data-logging voltage devices.~~
- ~~Data-logging current devices (e.g. voltage data logger and current transducer).~~
- Voltage data loggers (one for the DUT's PV input and one for each of the DUT's batteries).
- Current data loggers (e.g. voltage data logger and current transducer) (one for the DUT's PV input and one for each of the DUT's batteries).

  NOTE Most DUTs have only one battery.
- Series and parallel resistors (or variable resistors) for simulating PV input.
- Variable resistor for measuring the I-V curve from the PV simulator (optional).
- Resistance meter or multimeter.
- Surface-mounted thermocouple(s) and a thermocouple reader ~~with a precision less than 2 °C~~ or other suitable surface-mounted temperature measurement devices (optional).
- Overcharge disconnect device that will stop a DUT's discharge when the DUT's battery reaches a specified voltage (if necessary).

Instead of a programmable power supply, an electronic apparatus designed to simulate the PV module's diode characteristic may be used. The characteristics of the apparatus shall be modelled and incorporated into the circuit simulation described in R.4.2.4 a). An example of an apparatus intended for this purpose is described by Stütz (2014). The use of such an apparatus can improve the curve-fitting accuracy and dynamic performance, especially with DUTs that use pulse-width modulation (PWM) or maximum power point tracking (MPPT). The laboratory shall ensure that any such apparatus has voltage and current accuracy at least equivalent to the overall accuracy of the resistor network with a power supply meeting the requirements above.

The series resistance added by the test apparatus and all measurement equipment between the PV-simulating apparatus and the DUT's PV input, and the series resistance added between the DUT and the battery, shall each be no more than 90 mΩ. This value includes the resistance of the wires and connectors, if any, added in the sample preparation procedure (G.4.4).

R.4.2.2 Test prerequisites

The DUT's battery should be at a state of charge that corresponds to the "end of discharge," which ~~may~~ shall be accomplished using procedures in Annex N. Additionally, this test shall be performed after completion of the outdoor PV module I-V characteristics measurements

IECNORM.COM : Click to view the full PDF of IEC TS 62257-9-5:2016 RLV
Withdrawn

(Annex Q), since the I-V curve information from the PV module during that test are needed to set up the inputs to the power supply for the electronics efficiency test. The results from the battery test (Annex K) and full-battery run time test (Annex M) are required for the calculations.

Special charging features that do not operate during a normal charge cycle, such as equalization or boost charging, shall not be enabled during this test, unless it is not possible to disable these features. Lights and appliances not containing batteries shall be disconnected and the DUT shall be turned off or set to standby mode (i.e. the mode in which the DUT's functionality is not active but the DUT's battery can be charged).

In some cases a product can contain multiple components with batteries that can charge from the PV module. In this case, there are two allowed methods for conducting the test. The choice of method depends on the characteristics of the product and the included appliances.

Method 1: The test is conducted with all batteries and appliances containing batteries connected, including those devices that can be charged from another battery in the system. The batteries in any light units are prepared according to Annex N. The batteries in any non-lighting appliances are prepared by operating the appliance for a duration equal to a typical day's usage; for appliances listed in Table GG.3, the typical use duration from Table GG.3 should be used. The run times for all appliances containing batteries are calculated in R.4.4.

Method 2: The test is conducted with all batteries connected except those batteries that can be charged from another battery in the system (i.e. batteries that can be charged at night). For example, if a system contains two battery units that connect to a single PV module via a splitter cable, both battery units would be connected for this test. However, a radio, torch, or portable lamp that contains a battery and charges from the DUT's main unit battery (e.g. via a USB port) would not be connected. Run times for lighting units and appliances that are not connected during the solar charge test shall be calculated using the methods in Annex GG.

R.4.2.3 Apparatus

The apparatus for the solar charge efficiency test is shown schematically in Figure R.1.

IECNORM.COM : Click to view the full PDF of IEC TS 62257-9-5:2016 RLV
Withdrawn

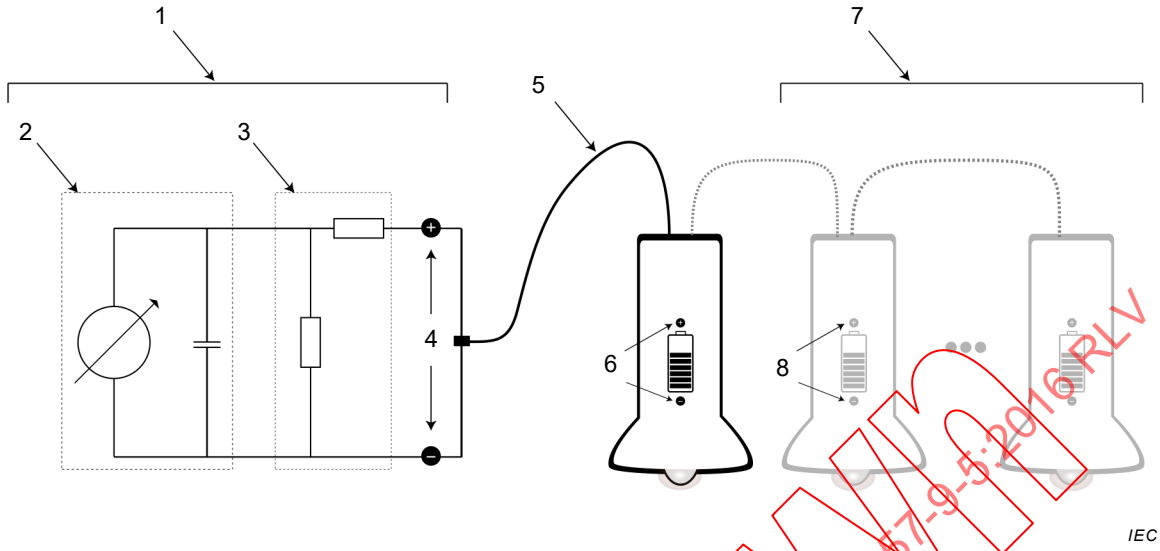

Key

1 PV simulation circuit

2 Laboratory power supply

3 Series and parallel resistors (or variable resistors)

4 PV simulation circuit output (measure current and voltage here during simulated solar charging)

5 Connection cable from PV simulation circuit to lighting unit

6 Lighting product battery (measure current and voltage here during simulated solar charging)

7 [optional] Additional lighting units with separate batteries that are included in the kit

8 [optional] Additional lighting unit battery(-ies) (measure current and voltage here during simulated solar charging)

Figure R.1 – Schematic of the power supply and DUT connection for the solar charge efficiency test

R.4.2.4 Procedure

Preparation for the test.

a) Use the TMOT I-V curve (from Annex Q) to find appropriate resistor values and power supply set points to simulate the PV module operating at TMOT during the charging cycle. A computer spreadsheet or program should be used for this step.

   – The spreadsheet or program is used to estimate the response curve of the PV simulator circuit over the range of voltages that corresponds to the I-V curve.

   – The input variables to the spreadsheet shall be the following:

   - series resistance;
   - parallel resistance;
   - voltage setpoint;
   - current setpoints corresponding to each level of simulated solar ~~radiation~~ irradiance listed in Table R.2.

   – The circuit simulation shall be based on Ohm's law. When the diode characteristic is simulated using an apparatus other than a laboratory power supply, as described in R.4.2.1, the behaviour of the apparatus shall be included in the circuit model.

   – The spreadsheet or program shall estimate the TMOT current at evenly spaced voltage points by linearly interpolating between points on the measured I-V curve.

IECNORM.COM : Click to view the full PDF of IEC TS 62257-9-5:2016 RLV
Withdrawn

– The spreadsheet or program shall scale the interpolated I-V curve for each level of simulated solar ~~radiation~~ irradiance listed in Table R.2 by multiplying the interpolated current values by the ratio of the desired solar ~~radiation~~ irradiance level to 1 000 W/m^2:

$$I_{pv}(V) = I_{interp}(V) \times \frac{G}{1\,000\ W/m^2}$$

where

$I_{pv}(V)$ is the scaled, interpolated current at each solar ~~radiation~~ irradiance level i and voltage V, in amperes (A);

$I_{interp}(V)$ is the interpolated current at TMOT and 1 000 W/m^2 at voltage V, in amperes (A);

G is the simulated solar ~~radiation~~ irradiance, in watts per square metre (W/m^2).

– The spreadsheet or program shall use a non-linear minimization technique to minimize the weighted sum of the squared residuals between the scaled, interpolated TMOT I-V curve values and the simulated I-V curve of the PV simulator by altering the input variables. To give preference for close agreement near the maximum power point, the SSR at each point shall be weighted by the product of the duration of each solar ~~radiation~~ irradiance step (from Table R.2) and the power in the scaled TMOT curve:

$$\text{weighted SSR} = \sum_G \left(\Delta t_G \cdot \sum_V I_{pv,G}(V) \cdot V \cdot \left(I_{fit,G}(V) - I_{pv,G}(V) \right)^2 \right)$$

where

G is the simulated solar ~~radiation~~ irradiance, in watts per square metre (W/m^2);

Δt_G is the duration corresponding to each solar ~~radiation~~ irradiance level i, in hours (h);

V is the voltage at each point in the interpolated I-V curve, in volts (V);

$I_{pv,G}(V)$ is the scaled, interpolated current at solar ~~radiation~~ irradiance level G and voltage V, in amperes (A);

$I_{fit,G}(V)$ is the fitted simulated current at solar ~~radiation~~ irradiance level G and voltage V, in amperes (A);

– The outcomes of the spreadsheet or program are the best fit input variables:

- series resistance (R_s);
- parallel resistance (R_p);
- voltage setpoint (V_{sim});
- current setpoints ($I_{sim,1000}$, $I_{sim,900}$, $I_{sim,700}$, $I_{sim,500}$, $I_{sim,300}$).

b) Build a PV simulator circuit as in Figure R.1 using fixed or variable resistors with appropriate power ratings wired in parallel and series with the power supply. Use a resistance meter or multimeter to verify that the actual resistance values meet the accuracy requirement in Table CC.2.

~~c) Use a resistance meter or multimeter to measure the actual values of the parallel and series resistance in the PV simulator circuit and enter them in the spreadsheet from step (a). Re-solve the minimization problem with those resistances held constant to find new ideal values for the other input variables (the power supply setpoints).~~

c) For each simulated solar ~~radiation~~ irradiance level, check that the simulated I-V curve is a reasonable approximation of the true curve by calculating the deviation ratio between the simulated and scaled, interpolated TMOT I-V curves. The deviation ratio is defined as the simulated current divided by the scaled, interpolated TMOT current at each voltage point. For this calculation, use the true values of the input variables rounded to the precision of the test equipment. In the example below (Figure R.2), the deviation ratio is close to unity (between 0,95 and 1,05, or less than 5 % error) in the key parts of the I-V curve (at and to the left of the maximum power point).

IECNORM.COM : Click to view the full PDF of IEC TS 62257-9-5:2016 RLV
Withdrawn

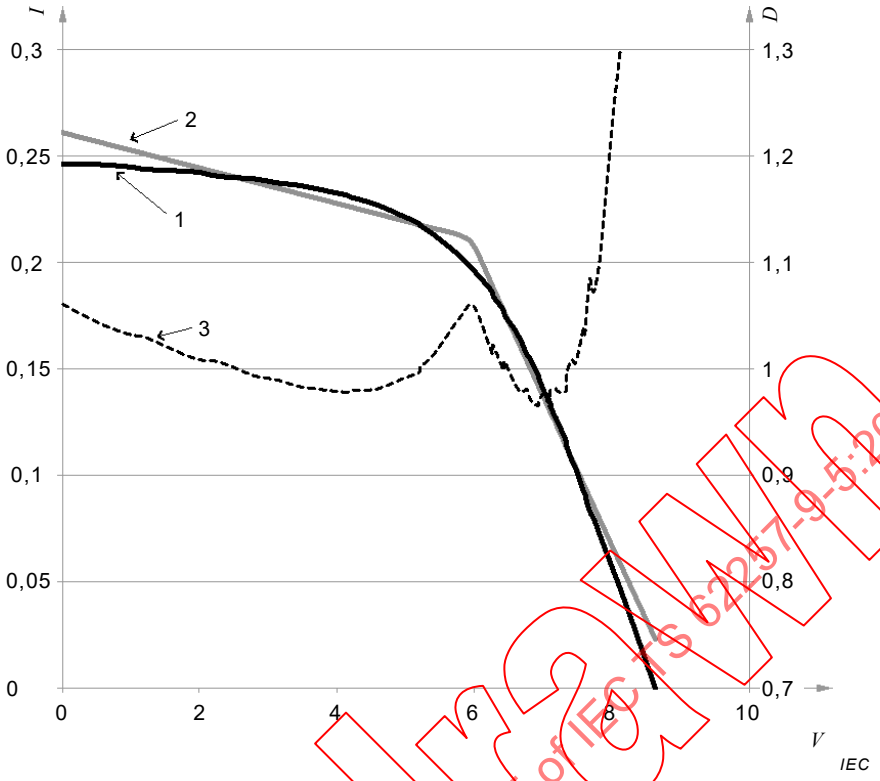

Key

I is current with units of amperes on the primary vertical axis

V is voltage with units of volts on the horizontal axis

D is the deviation ratio (unitless) on the secondary vertical axis

1 is the measured "true" I-V curve, plotted on the primary axis

2 is the I-V curve from the PV simulator ($I_{fit,c}(V)$), plotted on the primary axis

3 is the deviation ratio as a function of voltage, plotted on the secondary axis

Figure R.2 – Example "true" and simulated I-V curves plotted with the deviation ratio

d) (optional step) Experimentally verify the calculated deviation for the 1 000 W/m^2 I-V curve, using the following procedure. Alternatively, the I-V curve analyser specified in Annex Q may be used to trace the I-V curve of the simulated solar module.

   1) Connect data-logging current and voltage sensors to the PV simulator output. Set the sensors to log data at very short intervals, 1 s or less.

e) Simulate a PV module at TMOT and 1 000 W/m^2. Set the power supply current and voltage setpoints to $I_{sim,1000}$ and V_{sim}.

f) Measure an I-V curve for the PV simulator. Connect a variable resistor between the positive and negative terminals of the PV simulator and slowly sweep from high to low resistance and back.

g) Disconnect the resistor and stop the data collection.

h) Check to ensure the quality of the I-V curve data; cross check with the original (target) I-V curve to ensure the PV simulator is reasonably close, particularly in the region with voltages slightly below the maximum power point. Figure R.2 shows an example comparison. The true I-V curve (line 1) is compared to the simulated I-V curve (line 2).

i) Set up the prepared DUT (see ~~notes~~ requirements in R.4.2.2) and PV simulator circuit with current and voltage sensors, ensuring the PV simulator circuit is connected such that it replaces only the part of the PV module assembly included in the I-V curve (i.e. the PV simulator circuit is connected at the same point the I-V curve data were measured). Set the data-logging interval to 1 minute or less. Record the following quantities:

   – current entering the DUT's battery(-ies), in amperes (A);

IECNORM.COM : Click to view the full PDF of IEC TS 62257-9-5:2016 RLV
Withdrawn

– voltage across the DUT's battery(-ies), in volts (V);

– current provided by the PV simulator circuit, in amperes (A);

– voltage across the PV simulator circuit output, in volts (V).

j) Program the power supply to simulate a "standard solar day" of charging using the steps indicated below (Table R.2). To facilitate identification of solar ~~radiation~~ irradiance levels during data analysis, short pauses at 0 volts may be inserted between steps.

Table R.2 – Simulated solar day power supply settings

Step duration h	Simulated solar ~~radiation~~ irradiance W/m^2	Current setpoint	Voltage setpoint
0,5	300	$I_{sim,300}$	V_{sim}
0,5	500	$I_{sim,500}$	V_{sim}
1	700	$I_{sim,700}$	V_{sim}
1	900	$I_{sim,900}$	V_{sim}
1	1 000	$I_{sim,1000}$	V_{sim}
1	900	$I_{sim,900}$	V_{sim}
1	700	$I_{sim,700}$	V_{sim}
0,5	500	$I_{sim,500}$	V_{sim}
0,5	300	$I_{sim,300}$	V_{sim}

~~h) Check the connections and setpoints, then begin data logging and start the simulated charging cycle.~~

k) The DUT's battery voltage shall be continuously monitored such that the battery voltage shall not exceed a safety limit, either relying on the internal charge controller or based on the judgement of the laboratory. If necessary, integrate the overcharge protection disconnect device into the setup. The overcharge protection device shall disconnect if battery voltage rises above safety limits that are determined by the laboratory. Refer to the battery recommended testing practices (Annex L) for recommended maximum battery testing voltage values (refer to Table L.2). Optionally, monitor the DUT's battery temperature to ensure that it does not exceed ~~45 °C~~ Table L.2. If temperature monitoring is used, lithium-based batteries shall not be allowed to exceed 45 °C unless higher temperatures are allowed by the battery manufacturer. If the charge cycle is stopped by an overcharge or overtemperature protection device added by the test laboratory, the test results shall be considered invalid.

l) Check the connections and setpoints, then begin data logging and start the simulated charging cycle. Caution: Do not disconnect the product after having started the simulated charging cycle. The electronics of some DUTs can be damaged if their batteries are disconnected while voltage is applied to the PV input.

m) After the 7 h charging cycle is complete, stop the power supply, stop the data logging, disconnect the product from the PV simulator, and verify that the current and voltage data are valid with a quick check.

R.4.3 Test method using a solar array simulator (SAS)

R.4.3.1 Equipment requirements

The following equipment is required. Equipment shall meet the requirements in Table CC.2.

- Solar array simulator meeting the accuracy requirement specified in Table CC.2, including footnote a.
- Voltage data loggers (one for the DUT's PV input and one for each of the DUT's batteries).

IECNORM.COM : Click to view the full PDF of IEC TS 62257-9-5:2016 RLV
Withdrawn

- Current data loggers (e.g. voltage data logger and current transducer) (one for the DUT's PV input and one for each battery).

  NOTE Most DUTs have only one battery.

- Surface-mounted thermocouple(s) and a thermocouple reader or other suitable surface-mounted temperature measurement devices (optional).
- Overcharge disconnect device that will stop a DUT's discharge when the DUT's battery reaches a specified voltage (if necessary).

If the solar array simulator includes data-logging functionality, this functionality may be used instead of the voltage and current data loggers at the PV input, provided the accuracy and resolution requirements for data loggers (Table CC.2) are met.

R.4.3.2 Test prerequisites

The test prerequisites are identical to those for the test method using a resistor network (R.4.2.2).

R.4.3.3 Apparatus

The apparatus is identical to that for the test method using a resistor network (R.4.2.3), except the PV simulator circuit (item 1 in Figure R.1) is replaced with a solar array simulator.

R.4.3.4 Procedure

The following steps shall be followed.

a) Configure the solar array simulator to simulate the DUT's I-V curve at TMOT.

b) If the solar array simulator does not meet the accuracy requirement described in Table CC.2 according to the manufacturer's specifications, measure the simulator's I-V curve and verify that the simulated current is within the tolerance specified in Table CC.2 for all applicable voltage values. If the measured current is not within the specified tolerance, the solar array simulator shall not be used for this DUT. If the solar array simulator meets the accuracy requirement described in Table CC.2 according to the manufacturer's specifications, this step is optional.

c) Set up the prepared DUT (see requirements in R.4.3.2) and PV simulator circuit with current and voltage sensors, ensuring the PV simulator circuit is connected such that it replaces only the part of the PV module assembly included in the I-V curve (i.e. the PV simulator circuit is connected at the same point the I-V curve data were measured). Set the data-logging interval to 1 minute or less. Record the following quantities:

   – Current entering the DUT's battery(s), in amperes (A).
   – Voltage across the DUT's battery(s), in volts (V).
   – Current provided by the PV simulator circuit, in amperes (A).
   – Voltage across the PV simulator circuit output, in volts (V).

d) Program the solar array simulator to simulate a "standard solar day" of charging using the steps indicated in Table R.2. To facilitate identification of solar irradiance levels during data analysis, short pauses at 0 volts may be inserted between steps. Adjust the curve to the reduced solar irradiance levels by adjusting the current only, according to the following formula:

$$I_{SAS} = I_{TMOT} \cdot \frac{G_{sim}}{G_{TMOT}}$$

where

I_{SAS} is the current at each point on the simulated I-V curve, in amperes (A);

I_{TMOT} is the current at each point on the measured I-V curve, adjusted to TMOT, in amperes (A);

IECNORM.COM : Click to view the full PDF of IEC TS 62257-9-5:2016 RLV
Withdrawn

G_{sim} is the simulated solar irradiance from Table R.2, in watts per square metre (W/m^2).

G_{TMOT} is the solar irradiance at TMOT (1 000 W/m^2).

e) The DUT's battery voltage shall be continuously monitored such that the battery voltage shall not exceed a safety limit, either relying on the internal charge controller or based on the judgement of the laboratory. If necessary, integrate the overcharge protection disconnect device into the setup. The overcharge protection device shall disconnect if battery voltage rises above safety limits that are determined by the laboratory. Refer to the battery recommended testing practices (Annex L) for recommended maximum battery testing voltage values (refer to Table L.2). Optionally, monitor the DUT's battery temperature to ensure that it does not exceed a safe value (refer to Table L.2). If temperature monitoring is used, lithium-based batteries shall not be allowed to exceed 45 °C unless higher temperatures are allowed by the battery manufacturer. If the charge cycle is stopped by an overcharge or overtemperature protection device added by the test laboratory, the test results shall be considered invalid.

f) Check the connections and setpoints, then begin data logging and start the simulated charging cycle. Caution: Do not disconnect the battery after having started the simulated charging cycle. The electronics of some DUTs can be damaged if their batteries are disconnected while voltage is applied to the PV input.

g) After the 7 h charging cycle is complete, stop the power supply, stop the data logging, disconnect the battery from the PV simulator, and verify that the current and voltage data are valid with a quick check.

R.4.4 Calculations

The following calculations shall be made.

NOTE 1 In the following procedure, "PV simulator" refers to the resistor network or solar array simulator, whichever is applicable to the test method used.

a) Determine the maximum power available from the PV simulator ~~circuit~~ ($P_{max,sim,G}$) at each simulated solar ~~radiation~~ irradiance level G, using the following formula:

$$P_{max,sim,G} = \max_{V}\left(I_{pvsim,G}(V)\cdot V\right)$$

where

$P_{max,sim,G}$ is the maximum power available from the PV simulator ~~circuit~~ at simulated solar ~~radiation~~ irradiance level G, in watts(W);

V is the voltage at each point in the interpolated I-V curve, in volts (V);

~~I_{fit}~~ $I_{pvsim,G}(V)$ is the ~~fitted~~ simulated current at solar ~~radiation~~ irradiance level ~~i~~ G and voltage V, in amperes (A). If a resistor network is used, this is the fitted current $I_{fit,G}(V)$ calculated in step a) of R.4.2.4, as a function of voltage. If a solar array simulator is used, this is the I-V curve programmed into the solar array simulator, as a function of voltage.

NOTE 2 Regardless of the test method used, this quantity is the power at the maximum power point of the simulated I-V curve. This quantity is calculated from the DUT's I-V curve, not from the measurements performed for this test.

b) For each measurement at time t, identify the maximum power available from the PV simulator ($P_{max,sim}(t)$). This is the maximum available power $P_{max,sim,G}$ at the solar ~~radiation~~ irradiance level $G(t)$ corresponding to time t.

c) For each measurement at time t, compute the power supplied by the PV simulator ~~circuit~~ ($P_{pvsim}(t)$) using the following formula:

$$P_{pvsim}(t) = I_{pvsim}(t)\cdot V_{pvsim}(t)$$

where

$P_{pvsim}(t)$ is the power supplied by the PV simulator at time *t*, in watts (W);

$I_{pvsim}(t)$ is the current supplied by the PV simulator at time t, in amperes (A);

IECNORM.COM : Click to view the full PDF of IEC TS 62257-9-5:2016 RLV
Withdrawn

$V_{pvsim}(t)$ is the voltage supplied by the PV simulator at time t, in volts (V).

d) For each measurement at time t and each battery i, compute the power delivered to the battery ($P_{b,i}(t)$) using the following formula:

$$P_{b,i}(t) = I_{b,i}(t) \cdot V_{b,i}(t)$$

where

$P_{b,i}(t)$ is the power supplied by the PV simulator at time t, in watts (W);

$I_{b,i}(t)$ is the current supplied by the PV simulator at time t, in amperes (A);

$V_{b,i}(t)$ is the voltage across battery i at time t, in volts (V).

e) If the charge controller terminates the battery charge during the test (for example, if the battery is full), the battery-charging circuit efficiency and solar operation efficiency shall be calculated based on the current and voltage data prior to charge termination. To identify the charge termination time and detect if the event has occurred, the following procedure shall be used.

1) For each battery i, identify the potential charge termination voltage ($V_{b,ct,i}$). Use the following formula:

$$V_{b,ct,i} = V_{b,min,i} + 0{,}95 \times \left(V_{b,max,i} - V_{b,min,i}\right)$$

where

$V_{b,ct,i}$ is the charge termination voltage for battery i, in volts (V);

$V_{b,min,i}$ is the lowest voltage measured at battery i during the test, in volts (V);

$V_{b,max,i}$ is the highest voltage measured at battery i during the test, in volts (V).

2) For each battery i, find the time in hours when the battery voltage first reaches or exceeds $V_{b,ct,i}$. This is the charge termination time for battery i ($t_{ct,i}$). This is the time at which charge termination may occur; the following steps determine whether the charge cycle actually terminates at this time.

3) Determine the energy delivered to each battery i before charge termination ($E_{batt,ct,i}$) using the following formula:

$$E_{b,ct,i} = \sum_{t=0}^{t_{ct,i}} \left(P_{b,i}(t) \times \Delta t\right)$$

where

$E_{b,ct,i}$ is the energy delivered to battery i before charge termination, in watt-hours (Wh);

t is the elapsed time, in hours (h);

$t_{ct,i}$ is the charge termination time, in hours (h);

$P_{b,i}(t)$ is the power delivered to battery i at time t, in watts (W);

Δt is the duration of time associated with each measurement, in hours (h).

4) Determine the total energy delivered to each battery during the test ($E_{b,tot,i}$) using the following formula:

$$E_{b,tot,i} = \sum_{t=0}^{t_{max}} \left(P_{b,i}(t) \times \Delta t\right)$$

where

$E_{b,tot,i}$ is the total energy delivered to battery i, in watt-hours (Wh);

t is the elapsed time, in hours (h);

t_{max} is the full duration of the test, in hours (h);

$P_{b,i}(t)$ is the power delivered to battery i at time t, in watts (W);

IECNORM.COM : Click to view the full PDF of IEC TS 62257-9-5:2016 RLV
Withdrawn

Δt is the duration of time associated with each measurement, in hours (h).

5) For each battery, calculate the sun-to-battery efficiency before charge termination ($\eta_{s\text{-}b,before,i}$) using the following formula:

$$\eta_{s\text{-}b,before,i} = \frac{E_{b,ct,i}}{\sum_{t=0}^{t_{ct,i}} \left(P_{max,sim}(t) \times \Delta t \right)}$$

where

$\eta_{s\text{-}b,before,i}$ is the sun-to-battery efficiency before charge termination for battery i, as a fraction;

$E_{b,ct,i}$ is the energy delivered to battery i before charge termination, in watt-hours (Wh);

t is the elapsed time, in hours (h);

$t_{ct,i}$ is the charge termination time for battery i, in hours (h);

$P_{max,sim}(t)$ is the maximum power available from the PV simulator at time t, in watts (W);

Δt is the duration of time associated with each measurement, in hours (h).

6) For each battery, calculate the sun-to-battery efficiency after charge termination ($\eta_{s\text{-}b,after,i}$) using the following formula:

$$\eta_{s\text{-}b,after,i} = \frac{E_{b,tot,i} - E_{b,ct,i}}{\sum_{G} \left(P_{max,sim,G} \times \Delta t_G \right) - \sum_{t=0}^{t_{ct,i}} \left(P_{max,sim}(t) \times \Delta t \right)}$$

where

$\eta_{s\text{-}b,after,i}$ is the sun-to-battery efficiency after charge termination for battery i, as a fraction;

$E_{b,tot,i}$ is the total energy delivered to battery i during the test, in watt-hours (Wh);

$E_{b,ct,i}$ is the energy delivered to battery i before charge termination, in watt-hours (Wh);

$P_{max,sim,G}$ is the maximum available power from the PV simulator circuit at simulated solar radiation level G, in watts (W);

Δt_G is the duration of time at each solar radiation level, in hours (h).

t is the elapsed time, in hours (h);

$t_{ct,i}$ is the charge termination time for battery i, in hours (h);

$P_{max,sim}(t)$ is the maximum power available from by the PV simulator at time t, in watts (W);

Δt is the duration of time associated with each measurement, in hours (h).

7) For each battery i, compute the battery-specific data analysis end time ($t_{end,i}$). If the sun-to-battery efficiency after the charge termination time is less than half of the value before the charge termination time and the energy delivered to the battery up to the charge termination time is more than 80 % of the total energy delivered to the battery over the test, charge termination is determined to have occurred. Use the following formula to calculate $t_{end,i}$:

$$t_{end,i} = \begin{cases} t_{ct,i} & \text{if } \eta_{s\text{-}b,after,i} < 0{,}5 \times \eta_{s\text{-}b,before,i} \text{ and } E_{b,ct,i} > 0{,}8 \times E_{b,tot,i} \\ t_{max} & \text{otherwise} \end{cases}$$

where

$t_{end,i}$ is the battery-specific data analysis end time for battery i, in hours (h);

IECNORM.COM : Click to view the full PDF of IEC TS 62257-9-5:2016 RLV

~~$t_{ct,i}$ is the charge termination time for battery i, in hours (h);~~

~~t_{max} is the total duration of the test, in hours (h);~~

~~$\eta_{s\_b,after,i}$ is the sun-to-battery efficiency after charge termination, as a fraction;~~

~~$\eta_{s\_b,before,i}$ is the sun-to-battery efficiency before charge termination, as a fraction;~~

~~$E_{b,ct,i}$ is the energy delivered to battery i before charge termination, in watt-hours (Wh);~~

~~$E_{b,tot,i}$ is the total energy delivered to battery i during the test, in watt-hours (Wh).~~

1) For each battery i, identify the battery-specific charge termination time ($t_{end,i}$) by plotting the current into the battery vs. time and identifying the time at which the current drops to zero or becomes negative. If the current does not drop to zero, but there is a clear change in the charging regime as the battery approaches a full charge, the tester may use his or her discretion in determining whether charging has stopped. If the current drops to zero due to a full battery, but then increases (for example, if the battery voltage drops below the overcharge protection voltage and charging resumes), the earliest cutoff time should be used. In any case, the tester may use his or her discretion to determine the most accurate charge termination time. See Figure R.3 below for examples.

   An automated method, such as a spreadsheet or computer program, may be used to identify a possible value for the charge termination time, provided the result obtained by such a method is checked for correctness by examining the plot of the current vs. time. The tester should also check that the current dropped to zero due to the behaviour of the DUT, not due to a data collection error, loose connection, or other fault in the test apparatus or DUT.

   Due to noise or measurement error, the current will sometimes be observed to drop to a low but nonzero value rather than to zero. For this step, the current should be considered to have dropped to zero if it drops to a value that is indistinguishable from zero due to the uncertainty in the current measurement.

   If pauses were inserted between solar irradiance steps to facilitate identification of solar irradiance levels, some DUTs could restart charging after a pause, even if charging had previously stopped. In this case, the charge termination time should be the first time that charging stopped, before the pause.

NOTE 3 In case of pulse-width modulation (PWM) controllers, aliasing effects (beat effects) can occur due to unsynchronised PWM frequency and sampling frequency of the current logger. This can lead to "chaotic" measurements which are difficult to interpret.

IECNORM.COM : Click to view the full PDF of IEC TS 62257-9-5:2016 RLV
Withdrawn

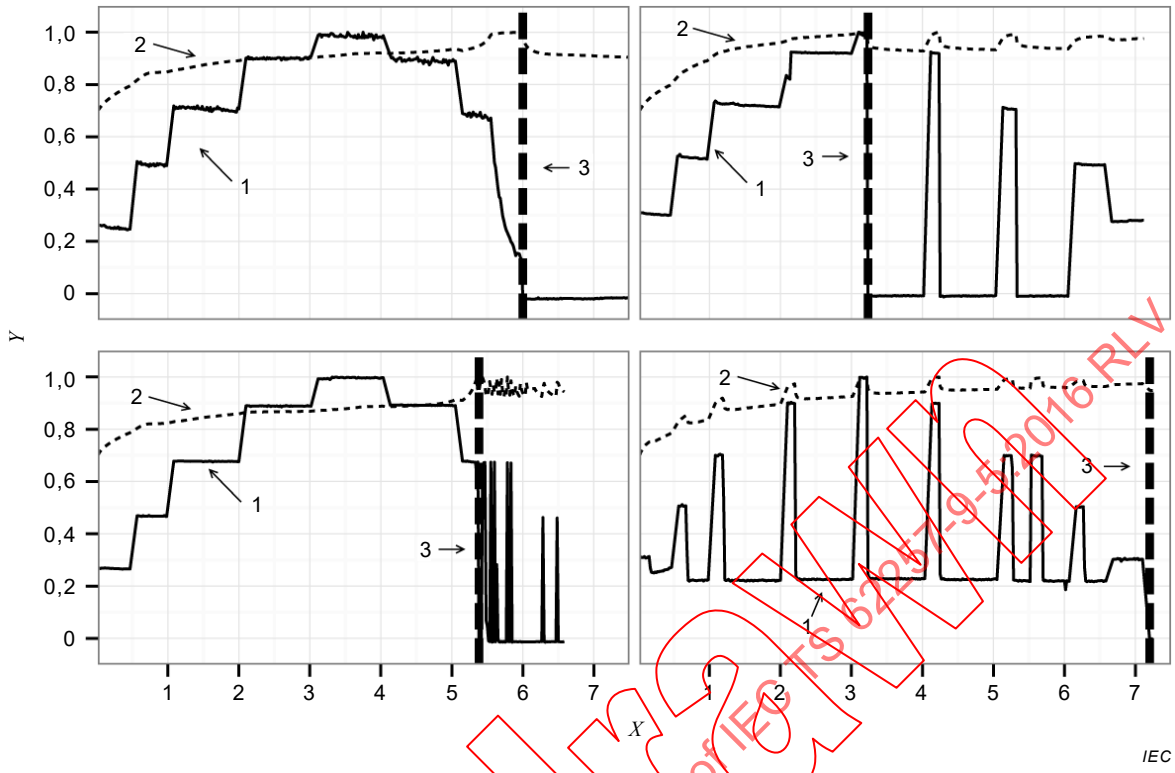

Key

X is time with units of hours on the horizontal axis

Y is current or voltage in arbitrary units on the vertical axis

1 is the current into the battery, in arbitrary units

2 is the battery voltage, in arbitrary units

3 indicates the charge termination time

NOTE 1 The thick dashed line indicates the correct charge termination time for each battery. The battery voltage is also plotted for reference.

NOTE 2 Plotting the battery voltage can be helpful in determining whether the charge has terminated due to the behaviour of the DUT's charge controller or due to a fault in the apparatus or DUT. Usually, the battery voltage will reach a local maximum at the charge termination time and then remain constant or decrease after charging stops.

Figure R.3 – Example plots of current vs. time for four different DUT batteries.

2) Determine the overall data analysis end time (t_{end}) as the largest value of $t_{end,i}$ for all batteries:

$$t_{end} = \max_{i}\left(t_{end,i}\right)$$

where

t_{end} is the overall data analysis end time, in hours (h);

$t_{end,i}$ is the battery-specific data analysis end time for battery i, in hours (h).

For the remaining calculation steps, all energy totals (E_{pvsim}, $E_{max,sim}$, and $E_{b,i}$) shall be calculated using only the values for times less than t_{end}.

f) Determine the energy supplied by the PV simulator ~~circuit~~ (E_{pvsim}) using the following formula:

$$E_{pvsim} = \sum_{t=0}^{t_{end}}\left(P_{pvsim}(t)\cdot\Delta t\right)$$

where

IECNORM.COM : Click to view the full PDF of IEC TS 62257-9-5:2016 RLV
Withdrawn

E_{pvsim} is the energy supplied by the PV simulator, in watt·hours (Wh);

t is the elapsed time, in hours (h);

t_{end} is the overall data analysis end time, in hours (h);

$P_{pvsim}(t)$ is the power supplied by the PV simulator at time t, in watts (W);

Δt is the duration of time associated with each measurement, in hours (h).

g) Calculate the maximum available simulated PV energy ($E_{max,sim}$) using the following formula:

$$E_{max,sim} = \sum_{t=0}^{t_{end}} \left(P_{max,sim}(t) \cdot \Delta t \right)$$

where

$E_{max,sim}$ is the maximum available simulated PV energy, in watt·hours (Wh);

t is the elapsed time, in hours (h);

t_{end} is the overall data analysis end time, in hours (h);

$P_{max,sim}(t)$ is the maximum power available from the PV simulator at time t, in watts (W);

Δt is the duration of time associated with each measurement, in hours (h).

h) Determine the energy delivered to each battery ($E_{b,i}$) using the following formula:

$$E_{b,i} = \sum_{t=0}^{t_{end}} \left(P_{b,i}(t) \cdot \Delta t \right)$$

where

$E_{b,i}$ is the energy delivered to battery i, in watt·hours (Wh);

t is the elapsed time, in hours (h);

t_{end} is the overall data analysis end time, in hours (h);

$P_{b,i}(t)$ is the power delivered to battery i at time t, in watts (W);

Δt is the duration of time associated with each measurement, in hours (h).

i) Determine the energy allocation ratio for each battery using the following formula:

$$\alpha_i = \frac{E_{b,i}}{\sum_i E_{b,i}}$$

where

α_i is the energy allocation ratio for battery i, a unitless ratio;

$E_{b,i}$ is the energy delivered to battery i, in watt·hours (Wh).

j) Determine the battery-charging circuit efficiency (η_{bcc}) using the following formula:

$$\eta_{bcc} = \frac{\sum_i E_{b,i}}{E_{pvsim}}$$

where

η_{bcc} is the battery-charging circuit efficiency as a fraction, from the battery test (Annex K);

$E_{b,i}$ is the energy delivered to battery i, in watt·hours (Wh), from the full-battery run time test (Annex M);

E_{pvsim} is the energy supplied by the ~~power supply~~ PV simulator, in watt·hours (Wh).

k) Estimate the solar operation efficiency ($\eta_{sol\text{-}op}$) using the following formula:

IECNORM.COM : Click to view the full PDF of IEC TS 62257-9-5:2016 RLV
Withdrawn

$$\eta_{\text{sol-op}} = \frac{E_{\text{pvsim}}}{E_{\text{max,sim}}}$$

where

$\eta_{\text{sol-op}}$ is the solar operation efficiency as a fraction;

$E_{\text{max,sim}}$ is the maximum available simulated PV energy, in watt·hours (Wh);

E_{pvsim} is the energy supplied by the PV simulator, in watt·hours (Wh).

l) If the DUT was configured according to method 1 in R.4.2.2, or optionally if the DUT was configured according to method 2, estimate the solar run time on each setting for each battery with the following formula:

$$t_{\text{SRT},s,i} = \min\left(\frac{E_{\text{solar}}}{1\ \text{kW/m}^2} \times \frac{P_{\text{mpp,TMOT}} \cdot \eta_{\text{sol-op}} \cdot \alpha_i \cdot \eta_{\text{bcc}} \cdot \eta_{\text{batt}}}{P_{\text{FBR},s,i}}, t_{\text{FBR},s,i}\right)$$

where

$t_{\text{SRT},s,i}$ is the solar run time on setting s for battery i, in hours (h);

E_{solar} is the total solar resource, in kilowatt·hours per square metre (kWh/m^2) – typically use the standard solar day, 5 kWh/m^2;

$P_{\text{mpp,TMOT}}$ is the maximum power point power of the PV module at TMOT in watts (W);

$\eta_{\text{sol-op}}$ is the solar operation efficiency as a fraction;

α_i is the allocation ratio for battery i, a unitless ratio;

η_{bcc} is the battery-charging circuit efficiency as a fraction;

η_{batt} is the battery efficiency as a fraction;

$P_{\text{FBR},s,i}$ is the average power during the full-battery run time test on setting s for battery i in watts (W);

$t_{\text{FBR},s,i}$ is the full-battery run time on setting s for battery i in hours (h).

NOTE 4 This solar run time calculation is most appropriate for products in which the battery and light point(s) are integrated into a single unit. For products with detachable lighting units and non-lighting appliances, the energy service calculations defined in Annex GG provide a more comprehensive and flexible approach to estimating daily energy and services.

m) ~~(optional step)~~ Optionally, repeat the previous step with an alternative solar resource. This step should be performed if the DUT's packaging or documentation explicitly advertises performance at solar resource values other than 5 kWh/m^2/day.

n) For each time t, calculate the instantaneous battery-charging circuit efficiency ($\eta_{\text{bcc}}(t)$) using the following formula:

$$\eta_{\text{bcc}}(t) = \frac{\sum_i P_{\text{b},i}(t)}{P_{\text{pvsim}}(t)}$$

where

$\eta_{\text{bcc}}(t)$ is the instantaneous battery-charging circuit efficiency at time t as a fraction;

$P_{\text{b},i}(t)$ is the power delivered to battery i at time t, in watts (W);

$P_{\text{pvsim}}(t)$ is the power supplied by the PV simulator at time t, in watts (W).

o) For each time t, calculate the instantaneous solar operation efficiency ($\eta_{\text{sol-op}}(t)$) using the following formula:

$$\eta_{\text{sol-op}}(t) = \frac{P_{\text{pvsim}}(t)}{P_{\text{max,sim}}(t)}$$

where

$\eta_{\text{sol-op}}(t)$ is the instantaneous solar operation efficiency at time t as a fraction;

IECNORM.COM : Click to view the full PDF of IEC TS 62257-9-5:2016 RLV
Withdrawn

$P_{pvsim}(t)$ is the power supplied by the PV simulator at time t, in watts (W);

$P_{max,sim}(t)$ is the maximum power available from the PV simulator at time t, in watts (W);

p) Based on the test data, identify if the following characteristics are present in the circuit between the solar module and the battery.

- DC-DC converter: if present, the sum of the current entering all batteries does not equal the current delivered from the PV simulator.
- Constant current with voltage drop: if present, the sum of the current entering all batteries equals the current delivered from the PV simulator throughout the test. Use the relationship between current and voltage drop to approximate the resistance and/or diode characteristics of the circuit. The voltage drop as a function of current in this case will be equal to a constant term (diode) plus a linear term (resistor).

q) For each battery i, calculate the average voltage from the start of the test to $t_{end,i}$. This is the average charging voltage.

R.5 Reporting

Report the following in the electronics efficiency test report ~~(a sample template is provided in Annex X)~~.

- Metadata:
  - report name;
  - procedure(s) used;
  - DUT manufacturer;
  - DUT name;
  - DUT model number;
  - name of test laboratory;
  - approving person;
  - aate of report approval.
- Results for tested DUT aspects for samples 1 through n:
  - battery-charging circuit efficiency (%);
  - solar operation efficiency (%);
  - solar run time from a standard solar day on each setting (when applicable);
  - solar run time from an alternative solar day on each setting (optional);
  - average charging voltage for each battery (V).
- Average of n sample results for tested DUT aspects.
- Coefficient of variation of n sample results for tested DUT aspects.
- Solar charging circuit characteristics.
- Comments:
  - individual comments, as necessary, for samples 1 through n;
  - overall comments, as necessary, for collective set of samples 1 through n.
- Figures
  - Plot showing the solar charging cycle for each sample in time series over the 7-hour charging period including the maximum power available from the PV simulator ($P_{max,sim}(t)$), actual power supplied by the PV simulator ($P_{pvsim}(t)$), and power delivered to the batteries ($P_{b,i}(t)$) (see Figure R.4 for an example plot). (This may be plotted as the sum over all batteries or separately for each battery.) In a separate plot or on a secondary axis show the instantaneous solar operation efficiency and

IECNORM.COM : Click to view the full PDF of IEC TS 62257-9-5:2016 RLV
Withdrawn

instantaneous battery-charging circuit efficiency in time series (see Figure R.5 for an example plot).

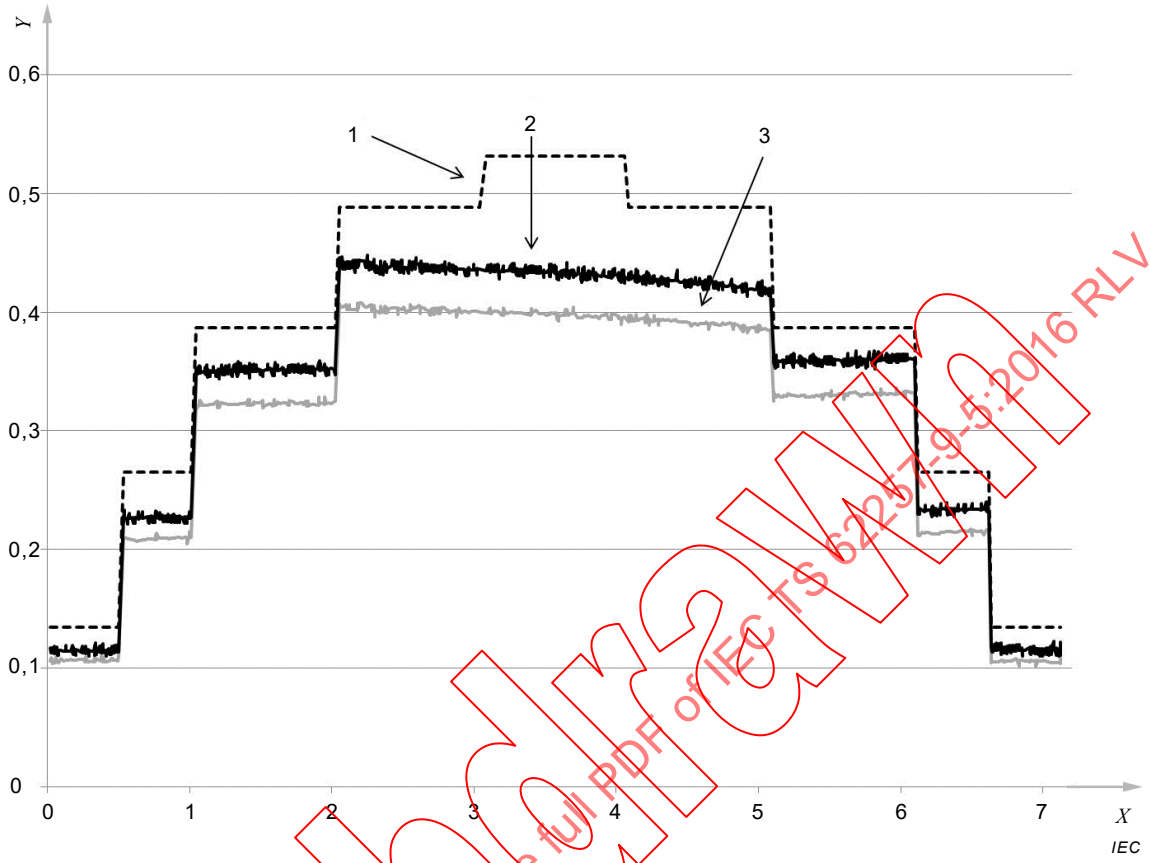

Key

X is time with units of hours on the horizontal axis

Y is power with units of watts on the vertical axis

1 is the maximum power available from the PV simulator ($P_{max,sim}(t)$), in watts

2 is the actual power supplied by the PV simulator ($P_{pvsim}(t)$), in watts

3 is the power delivered to the batteries ($P_{b,i}(t)$), in watts

Figure R.4 – Example time series plot of the solar charging cycle showing the maximum power available from the PV simulator, actual power supplied by the PV simulator, and power delivered to the batteries

IECNORM.COM : Click to view the full PDF of IEC TS 62257-9-5:2016 RLV
Withdrawn

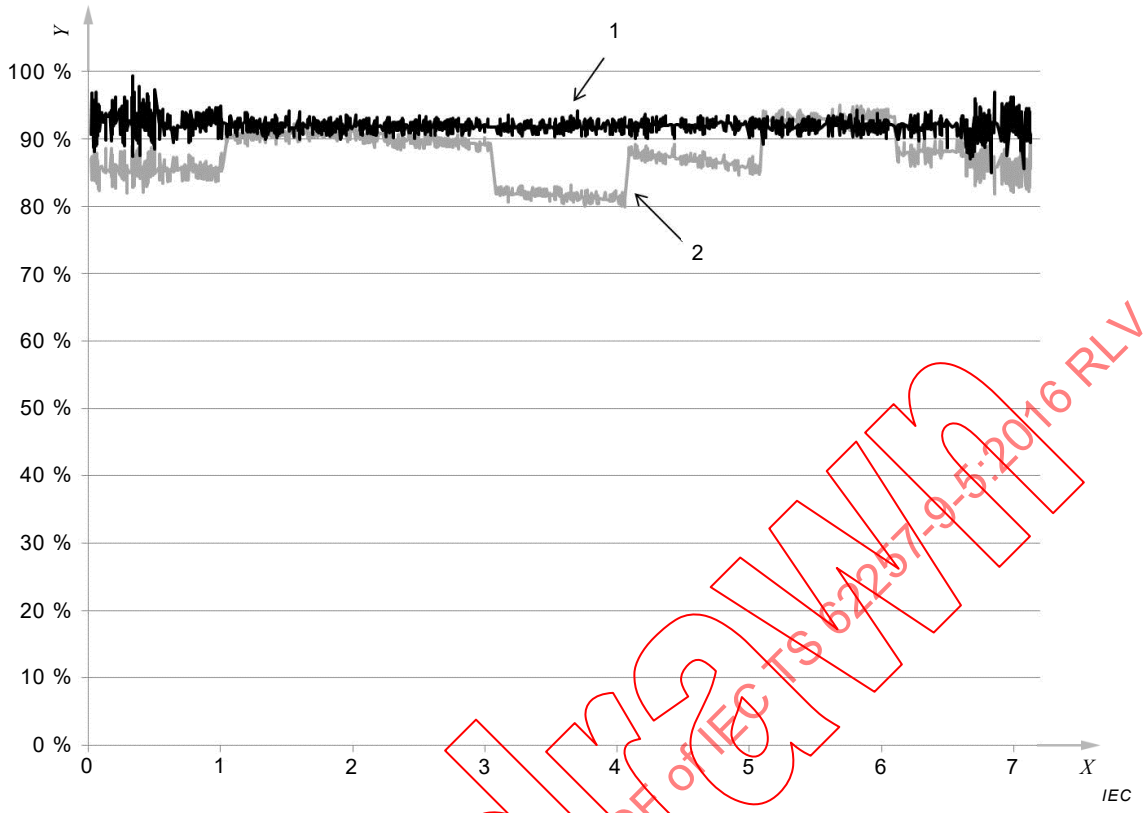

Key

X is time with units of hours on the horizontal axis

Y is efficiency as a percent on the vertical axis

1 is the instantaneous battery-charging circuit efficiency ($\eta_{bcc}(t)$), as a percent

2 is the instantaneous solar operation efficiency ($\eta_{sol\text{-}op}(t)$), as a percent

Figure R.5 – Example time series plot of the solar charging cycle showing the instantaneous battery-charging circuit efficiency and solar operation efficiency

IECNORM.COM : Click to view the full PDF of IEC TS 62257-9-5:2016 RLV
Withdrawn

Annex S
(normative)

Charge controller behaviour test

S.1 Background

Deep discharge and overcharge protection is important for user safety and battery longevity. Charge control is most critical for products with lead-acid, Li-ion, and $LiFePO_4$ batteries.

The charge controller behaviour test contains five methods to examine a DUT's charge controller. Every DUT shall be tested with the active deep discharge method, where the DUT is discharged until reaching its low-voltage disconnect (LVD) voltage or appropriately exceeding its recommended deep discharge voltage threshold. Every DUT shall also be tested with the active overcharge protection method, where the DUT is charged until reaching its overvoltage protection (OVP) voltage or appropriately exceeding its recommended OVP voltage threshold. For DUTs that have no active deep discharge protection, the passive deep discharge protection method shall be used, where the DUT's battery voltage is examined for safety during a long-term discharge. For DUTs with NiMH batteries that have no active overcharge protection, the passive overcharge protection method shall be used, where the DUT's long-term charging current is examined for safety.

Every DUT shall also be examined for standby losses. A DUT's electronics can draw substantial amounts of energy from the DUT's batteries while the DUT is not in use, and this standby loss can lead to shorter run times or problems when storing the DUT for long periods of time.

The choice of test methods and assessment of the appropriateness of charge control should include input from the battery manufacturer and/or system integrator about the approach to charge control and the design values for cutoff or other control algorithms. The best practice for testing is to establish what the design algorithm and setpoints are and measure for those using the appropriate methods. The assessment of whether charge control is present and appropriate ~~may~~ shall then be based on the combination of two factors: the appropriateness of the design values and whether the design was accurately realized as shown during the tests.

S.2 Test outcomes

The test outcomes of the charge controller behaviour test are listed in Table S.1.

Table S.1 – Charge controller behaviour test outcomes *(1 of 2)*

Metric	Reporting units	Related aspects	Notes
Active deep discharge protection	Yes/no	4.2.3.13 Battery protection strategy	--
Deep discharge protection voltage	Volts (V)	4.2.3.13 Battery protection strategy	Measured only if the DUT has active deep discharge protection
Active overcharge protection	Yes/no	4.2.3.13 Battery protection strategy	--
Overcharge protection voltage	Volts (V)	4.2.3.13 Battery protection strategy	Measured only if the DUT has active overcharge protection

IECNORM.COM : Click to view the full PDF of IEC TS 62257-9-5:2016 RLV
Withdrawn

Table S.1 *(2 of 2)*

Passive deep discharge protection	Yes/no	4.2.3.13 Battery protection strategy	--
Passive deep discharge protection battery voltage at 24 h	Volts per cell (V/cell)	4.2.3.13 Battery protection strategy	Required only if tested for passive deep discharge protection
Passive overcharge protection	Yes/no	4.2.3.13 Battery protection strategy	Measured only for NiMH batteries with no active overcharge protection
Passive overcharge protection continuous charging current	Milliamperes (mA)	4.2.3.13 Battery protection strategy	Required only if tested for passive overcharge protection
~~30-day battery~~ Standby loss ~~fraction~~ current	~~Percentage (%)~~ Amperes (A)	4.2.3.13 Battery protection strategy	~~Fraction of the battery's measured capacity that is drawn from a product's battery with the product switched off over 30 days~~ Current that is drawn from a product's battery when the product is switched off when at 50 % state of charge

S.3 Related tests

The results of the active deep discharge protection test (S.4.1) may be substituted with results of the full-battery run time test combined with deep discharge protection measurement (M.4.2).

The results of the passive deep discharge protection test (S.4.3) may be substituted with results of the full-battery run time test combined with deep discharge protection measurement (M.4.2).

Annex S shall be performed after the outdoor photovoltaic module IV characteristics test (Annex Q) for solar-charged products because the active overcharge protection test (S.4.2) requires the DUT's maximum power point current (I_{mpp}) and the passive overcharge protection test (S.4.4) requires the DUT's entire I-V curve data set.

The DUT's full battery run time from the full-battery run time test procedure (Annex M) is required to set the DUT's battery to the proper state of charge during the standby loss test.

S.4 Procedure

S.4.1 Active deep discharge protection test

S.4.1.1 General

The DUT is discharged until its battery voltage reaches the DUT's LVD voltage or the low-voltage disconnect device's set point.

S.4.1.2 Equipment requirements

The following equipment is required. Equipment shall meet the requirements in Table CC.2.

- ~~DC power supply.~~
- DC voltmeter ~~and/~~or multimeter ~~(at least 0,5 % accuracy)~~.
- ~~Data-logging voltage measurement device (optional).~~

IECNORM.COM : Click to view the full PDF of IEC TS 62257-9-5:2016 RLV
Withdrawn

- ~~Data-logging light meter or data-logging current measurement device (e.g., voltage data logger with a current transducer) (optional).~~
- Voltage data logger (recommended).
- Ammeter or current data logger (e.g. voltage data logger with a current transducer) (current data-logger recommended).
- Low-voltage disconnect device that will stop a DUT's discharge when the DUT's battery reaches a specified voltage (recommended).

The total series resistance added by the test apparatus and all measurement equipment shall be no more than 60 mΩ. This value includes the resistance of the wires and connectors, if any, added in the sample preparation procedure (G.4.4).

S.4.1.3 Test prerequisites

The DUT shall be either fully charged at the start of the test or charged enough to provide at least ~~30~~ 20 min of ~~light~~ service before reaching its deep discharge protection voltage or reaching sufficiently below the recommended deep discharge protection voltage threshold for the DUT's battery chemistry (see Table L.1 for recommended thresholds).

If the DUT's battery needs to be charged, charge the battery using one of the two procedures according to the DUT's battery chemistry.

- If the DUT's battery is of NiMH chemistry, then use the procedures in the battery test (Annex K) – either the overcharge or negative slope charging methods in K.4.3.1.
- If the DUT's battery is of any other chemistry, then use the procedures in the active overcharge protection test (S.4.2). If the DUT's solar module has not yet been tested, then set up the apparatus according to Figure S.1 and set the current limit to the rated maximum power point current at STC, I_{mpp}.

S.4.1.4 Apparatus

The DUT shall be set in a secure location such that its parameters ~~may~~ can be monitored and/or data-logged.

If necessary, a low-voltage disconnect device may be used that monitors the battery voltage and can cut the battery circuit if the voltage drops below a predetermined level.

S.4.1.5 Procedure

The following steps shall be followed.

a) If it is unclear if the DUT has deep discharge protection for its battery, the tester may prepare the low-voltage disconnect device so that it stops the DUT's discharge if the DUT's battery reaches the minimum battery testing voltage specified in Annex L.

~~b) Turn on the DUT to begin discharging the battery. Continuously monitor the battery terminal voltage and visual light output. If using data-logging devices, the light does not need to be continuously visually monitored. The battery voltage and either the battery current or light output shall be collected at intervals less than or equal to 1 min.~~

~~c) If the DUT automatically turns itself off, the DUT has active deep discharge protection and the voltage immediately before it turns off is the DUT's deep discharge protection voltage.~~

~~d) If the DUT is turned off by the low-voltage disconnect device, no active deep discharge protection is incorporated into the DUT's charge controller. If no active deep discharge protection is observed, perform the passive deep discharge protection test (S.4.3).~~

b) Set and secure the DUT in a safe location to prevent interference and plug in all the included appliances that the DUT can power. Turn on the DUT to begin discharging the battery. The DUT service(s) shall be on in highest setting(s) (i.e., lights in their brightest setting, fan in its fastest speed). Continuously monitor the DUT's battery terminal voltage

IECNORM.COM : Click to view the full PDF of IEC TS 62257-9-5:2016 RLV
Withdrawn

and current at the negative battery terminal. The battery voltage and current shall be collected at intervals less than or equal to 1 min.

NOTE In case of pulse-width modulation (PWM) controllers, aliasing effects (beat effects) can occur when data logging due to unsynchronised PWM frequency and sampling frequency of the current logger. This can lead to "chaotic" measurements which are difficult to interpret.

c) If the DUT has active deep discharge protection, one of two observations will be seen: (1) an abrupt drop will occur in the functioning of the DUT's appliance(s) and current flow will quickly decrease to 0 A, or (2) a relatively quick drop will occur in the functioning of the DUT's appliance(s) and current will ultimately decrease to 0 A. The DUT's battery voltage at the instant before the light output reaches zero is the active deep discharge protection voltage. Typically after reaching its deep discharge protection voltage, the DUT's battery voltage increases.

d) If the battery contains internal circuitry (refer to F.4.3.5) and the measured deep discharge protection voltage is outside of the targets specified by the manufacturer (D.3.2.2) or the DUT's battery voltage falls below the recommended deep discharge protection voltage specified in Annex L, the test may be repeated with the voltage data logger connected on the battery side of the internal circuitry, if the test laboratory determines that it is safe to do so.

e) If no active deep discharge protection is observed, perform the passive deep discharge protection test (S.4.3).

f) If the low-voltage disconnect device stops the DUT's discharge during the test, record that the battery voltage reached the minimum battery testing voltage and that no deep discharge voltage was observed.

S.4.1.6 Calculations

There are no calculations for the active deep discharge protection test.

S.4.2 Active overcharge protection test

S.4.2.1 General

The DUT is charged until its battery voltage reaches the DUT's OVP voltage or the overcharge protection disconnect device's set point, or if the battery's temperature exceeds ~~45 °C~~ a safe value (refer to Table L.2).

S.4.2.2 Equipment requirements

The following equipment is required. Equipment shall meet the requirements in Table CC.2.

- DC power supply or solar array simulator.
- DC voltmeter ~~and/~~or multimeter ~~(at least 0,5 % accuracy)~~.
- DC ammeter ~~and/~~or multimeter ~~(at least 1 % accuracy)~~.
- ~~Data-logging voltage measurement device (optional).~~
- Voltage data logger (optional).
- ~~Data-logging current measurement device (e.g., voltage data logger with a current transducer) (optional).~~
- Current data logger (e.g. voltage data logger with a current transducer) (optional).
- Series resistor or series and parallel resistors (or variable resistors) for simulating PV input ~~(optional)~~ (when using a DC power supply as opposed to a solar array simulator).
- Surface-mounted thermocouple(s) and a thermocouple reader ~~with a precision less than 2 °C~~ (optional).
- AC power adapter supplied with the DUT (for DUTs with a grid-charging option and no solar-charging option)

IECNORM.COM : Click to view the full PDF of IEC TS 62257-9-5:2016 RLV
Withdrawn

- Overcharge disconnect device that will stop a DUT's discharge when the DUT's battery reaches a specified voltage (if necessary)

The total series resistance added by the test apparatus and all measurement equipment shall be no more than 60 mΩ. This value includes the resistance of the wires and connectors, if any, added in the sample preparation procedure (G.4.4).

S.4.2.3 Test prerequisites

The DUT shall be either fully discharged at the start of the test or discharged enough to accept at least ~~30~~ 20 min of charging before reaching its overcharge protection voltage or the overcharge disconnect device's cutoff, which may be selected based on information in Table L.2 if the overcharge voltage set point is not supplied by the manufacturer.

S.4.2.4 Apparatus

The DUT shall be set in a secure location such that its parameters ~~may~~ can be monitored and/or data-logged. If the DUT has a solar-charging option, the DUT is charged via the PV module socket from a DC power supply with a series resistor in place (Figure S.1). An alternative is to charge the DUT via the PV module socket from a DC power supply with a series resistor and parallel resistor in place (Figure R.1), or using a solar array simulator. If the product does not have a solar-charging option, the DUT shall be charged via its provided grid charger or charged via its electromechanical charging process or by a DC power supply configured to simulate the electromechanical charging device.

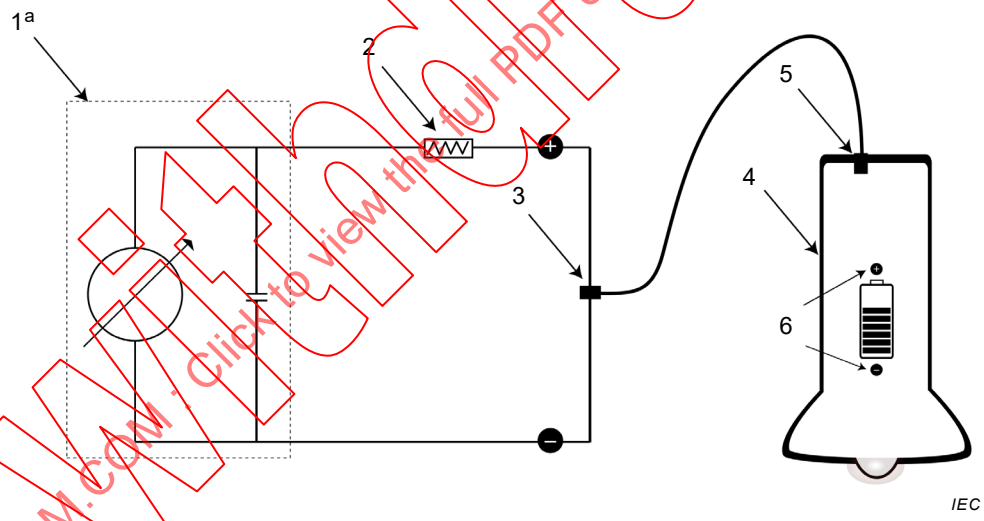

Key

1 DC power supply
2 Series protection resistor
3 Plug
4 DUT
5 DUT's PV module input socket
6 Battery

a Set current limiting with the maximum power point current at STC, I_{mpp}, from the outdoor photovoltaic module I-V characteristics test (Annex Q), or, if the product is charged with other means set the current to the typical delivery current for the charging system.

Figure S.1 – Schematic of the DC power supply-DUT connection using a series protection resistor

S.4.2.5 Procedure

The following steps shall be followed if the DUT has a solar charging option.

IECNORM.COM : Click to view the full PDF of IEC TS 62257-9-5:2016 RLV
Withdrawn

a) If the setup includes the parallel resistor (Figure R.1), adjust the current limiting value of the DC power supply to the ~~PV module's maximum power point current at TMOT, $I_{mpp,TMOT}$ (refer to the results of the outdoor photovoltaic module I-V characteristics test (Annex Q))~~ current setpoint at 1 000 W/m^2 irradiance, $I_{sim,1000}$, calculated in the solar charge test (Annex R). Also adjust the voltage of the DC power supply, V_{ps}, to the voltage setpoint, V_{sim}, calculated in the solar charge test (Annex R). Also set the series resistance, R_s, and the parallel resistance, R_p, to the values calculated in the solar charge test (Annex R). Skip steps (b) through (f) and proceed to step (g).

~~b) If the setup does not include the parallel resistor (Figure S.1), adjust the current limiting value of the DC power supply to the PV module's maximum power point current at TMOT, $I_{mpp,TMOT}$ (refer to the results of the outdoor photovoltaic module I-V characteristics test (Annex Q)).~~

b) If the setup uses a solar array simulator, configure the solar array simulator as for the solar charge test (Annex R) to simulate the I-V curve at an irradiance of 1 000 W/m^2. Skip steps c) through f) and proceed to step g).

c) If the setup includes a series resistor only (Figure S.1), adjust the current limiting value of the DC power supply to the PV module's maximum power point current at TMOT, $I_{mpp,TMOT}$ (refer to the results of the outdoor photovoltaic module I-V characteristics test (Annex Q)).

d) Due to voltage drops from the PV module's blocking diode, cable losses, and the series resistor, set the power supply output voltage, V_{ps}, using the following formula:

$$V_{ps} = 1{,}25 \times V_{b,max}$$

where

V_{ps} is the DC power supply output voltage, in volts (V);

$V_{b,max}$ is the DUT's battery's maximum charge voltage, in volts (V), which may be obtained from the battery testing recommended practices annex (Annex L).

e) Connect the PV module socket of the DUT to the DC power supply in series with a protection resistor. In cases where the DUT has an integrated PV module, connect the positive and negative wires from the DUT that were attached to the PV module to the DC power supply in series with a protection resistor. (This protection resistor is only needed in cases where a "shunt regulator" is built in; however, as a schematic of the DUT's electronics is usually not provided, this resistor should be used in all cases for safety reasons). The voltage drop in the series resistor should be between 10 % and 15 % of the voltage setting of the DC power supply (V_{ps}); therefore, size the resistor based on the following formula:

$$\frac{0{,}1 \times V_{ps}}{I_{mpp,TMOT}} \leq R_s \leq \frac{0{,}15 \times V_{ps}}{I_{mpp,TMOT}}$$

where

V_{ps} is the DC power supply output voltage, in volts (V);

$I_{mpp,TMOT}$ is the PV module's maximum power point current at TMOT, in amperes (A), obtained from the outdoor photovoltaic module I-V characteristics test (Annex Q);

R_s is the resistance of the series resistor, in ohms (Ω).

f) Ensure the series resistor's power dissipation rating is greater than or equal to the value given by the following formula:

$$P_{rs} \geq I^2_{mpp,TMOT} \cdot R_s$$

where

P_{rs} is the series resistor's minimum required power dissipation, in watts (W);

IECNORM.COM : Click to view the full PDF of IEC TS 62257-9-5:2016 RLV
Withdrawn

$I_{mpp,TMOT}$ is the PV module's maximum power point current at TMOT, in amperes (A), obtained from the outdoor photovoltaic module I-V characteristics test (Annex Q);

R_s is the resistance of the series resistor, in ohms (Ω).

g) If it is unknown whether the DUT has an overcharge protection disconnect, integrate the overcharge protection disconnect device into the setup. The overcharge protection device shall disconnect if battery voltage rises above safety limits that are determined by the laboratory. In some cases, the DUT's charge controller will be designed with an OVP battery voltage that is greater than the overcharge protection device's cutoff; therefore, ~~the person conducting~~ the tester has the discretion to allow the battery voltage to proceed above the recommended OVP voltage threshold if deemed safe and necessary. For Li-ion batteries, the battery voltage shall not exceed the maximum safe value specified by the battery supplier, or ~~4,25~~ 4,26 V/cell if no supplier-provided information is available; otherwise there is a risk of explosion. Optionally, monitor the DUT's battery temperature to ensure that it does not exceed ~~45 °C~~ a safe value (refer to Table L.2). If temperature monitoring is used, lithium-based batteries shall not be allowed to exceed 45 °C unless higher temperatures are allowed by the battery manufacturer.

h) Charge the DUT ~~at V_{ps} and $I_{mpp,TMOT}$~~ while continuously monitoring the DUT's battery terminal voltage and current at the negative battery terminal. ~~If the battery pack contains internal circuitry, it may be necessary to monitor the voltage across the actual battery cells rather than at the external battery pack terminals. If using a data-logging device,~~ The battery voltage and current ~~input~~ shall be collected at intervals less than or equal to 1 min.

NOTE In case of pulse-width modulation (PWM) controllers, aliasing effects (beat effects) can occur when data logging due to unsynchronised PWM frequency and sampling frequency of the current logger. This can lead to "chaotic" measurements which are difficult to interpret.

i) If the DUT automatically stops accepting charge, the highest voltage ~~immediately before it turns off~~ measured during the test is the DUT's overcharge protection voltage. For some DUTs, the current will not stop completely, but will begin tapering off when the DUT's battery voltage reaches its overcharge protection voltage. Continue monitoring until the DUT's battery voltage is no longer rising.

j) If the battery contains internal circuitry (refer to F.4.3.5) and the measured overcharge protection voltage is outside of the targets specified by the manufacturer (D.3.2.2) or the DUT's battery voltage exceeds the recommended overcharge protection voltage specified in Annex L, the test may be repeated with the voltage data logger connected on the battery side of the internal circuitry, if the test laboratory determines that it is safe to do so.

k) If the battery terminal voltage reaches the overcharge protection cutoff device's voltage threshold, no active overcharge protection is incorporated into the DUT's charge controller.

l) If in the case of a NiMH ~~or NiCd~~ battery the battery voltage levels off or begins to decrease before reaching the recommended overcharge protection voltage, but the current does not go to zero, no active overcharge protection is detected.

The following steps shall be followed if the DUT does not have a solar charging option:

m) If it is unknown whether the DUT has an overcharge protection disconnect, integrate the overcharge protection disconnect device into the setup. The overcharge protection device shall disconnect if battery voltage rises above safety limits that are determined by the laboratory. In some cases, the DUT's charge controller will be designed with an OVP battery voltage that is greater than the overcharge protection device's cutoff; therefore, ~~the person conducting~~ the tester has the discretion to allow the battery voltage to proceed above the recommended OVP voltage threshold if deemed safe and necessary. For Li-ion batteries, the battery voltage shall not exceed the maximum safe value specified by the battery supplier, or 4,25 V/cell if no supplier-provided information is available; otherwise there is a risk of explosion. Optionally, monitor the DUT's battery temperature to ensure that it does not exceed ~~45 °C~~ a safe value (refer to Table L.2). If temperature monitoring is used, lithium-based batteries shall not be allowed to exceed 45 °C unless higher temperatures are allowed by the battery manufacturer.

n) If the product has a grid-charging option, plug the AC power adapter supplied with the DUT into an outlet with AC voltage that is suitable for the DUT's supplied AC power adapter.

IECNORM.COM : Click to view the full PDF of IEC TS 62257-9-5:2016 RLV

o) If the product does not have a grid-charging option, but has an electromechanical charging option, crank-charge the DUT continuously at approximately 120 rpm or use a power supply to source current that is equal to the charging current generated at 120 rpm.

p) Charge the DUT while continuously monitoring the DUT's battery terminal voltage and current at the negative battery terminal. ~~If using a data-logging device,~~ The battery voltage and current input shall be collected at intervals less than or equal to 1 min.

~~m) If an overcharge protection disconnect device is not used, the DUT's battery voltage shall be continuously monitored to ensure it does not exceed a predetermined overvoltage limit.~~

q) If the DUT automatically stops accepting charge, the DUT has active overcharge protection, and the highest voltage ~~immediately before it turns off~~ measured during the test is the DUT's overcharge protection voltage. For some DUTs, the current will not stop completely, but will begin tapering off when the DUT's battery voltage reaches its overcharge protection voltage.

r) If the battery contains internal circuitry (refer to F.4.3.5) and the measured overcharge protection voltage is outside of the targets specified by the manufacturer (D.3.2.2) or the DUT's battery voltage exceeds the recommended overcharge protection voltage specified in Annex L, the test may be repeated with the voltage data logger connected on the battery side of the internal circuitry, if the test laboratory determines that it is safe to do so.

s) If the battery terminal voltage sufficiently exceeds the predetermined overvoltage limit, no active overcharge protection is incorporated into the DUT's charge controller.

S.4.2.6 Calculations

There are no calculations for the active overcharge protection test.

S.4.3 Passive deep discharge protection test

S.4.3.1 General

The DUT is left to discharge for 24 h and the minimum voltage ~~after~~ within the 24 h period is recorded. This method is only performed on DUTs that show no active deep discharge protection.

S.4.3.2 Equipment requirements

The following equipment is required. Equipment shall meet the requirements in Table CC.2.

- ~~DC power supply.~~
- DC voltmeter ~~and~~/or multimeter ~~(at least 0,5 % accuracy)~~.
- Voltage data logger (recommended).
- Ammeter or current data logger (e.g. voltage data logger with a current transducer) (optional).
- Low-voltage disconnect device that will stop a DUT's discharge when the DUT's battery reaches a specified voltage (recommended).

The total series resistance added by the test apparatus and all measurement equipment shall be no more than 60 mΩ. This value includes the resistance of the wires and connectors, if any, added in the sample preparation procedure (G.4.4).

S.4.3.3 Test prerequisites

The DUT shall have undergone the active deep discharge protection test. For DUTs with NiMH batteries, the battery voltage shall have just passed its recommended deep discharge protection voltage (Table L.1) when discharging. For DUTs with other battery chemistries, the battery shall be in the same state of charge as when the DUT reaches L_{70} (70 % of its initial light output during the full-battery run time test).

IECNORM.COM : Click to view the full PDF of IEC TS 62257-9-5:2016 RLV
Withdrawn

S.4.3.4 Apparatus

The DUT shall be placed in a secure location where it ~~may~~ can discharge for 24 h.

If necessary, a low-voltage disconnect device may be used that monitors the battery voltage and can cut the battery circuit if the voltage drops below a predetermined level.

S.4.3.5 Procedure

The following steps shall be followed.

a) Specify the accepted 24 h passive deep discharge battery protection voltage. This voltage may be selected based on information from Table L.1, if it is not supplied with the DUT or battery manufacturer.

b) If it is unclear if the DUT has deep discharge protection for its battery, the tester may prepare the low-voltage disconnect device so that it stops the DUT's discharge if the DUT's battery reaches the minimum battery testing voltage specified in Annex L.

~~c) Turn on the DUT and let it discharge for 24 h.~~

~~d) The battery voltage after 24 h is the DUT's passive deep discharge battery protection voltage.~~

c) Set and secure the DUT in a safe location to prevent interference and plug in all the included appliances that the DUT can power. Turn on the DUT and discharge the battery for 24 h. The DUT service(s) shall be on in highest setting(s) (i.e., lights in their brightest setting, fan in its fastest speed). Continuously monitor the DUT's battery terminal voltage and optionally monitor the DUT's battery current at the negative battery terminal. The battery voltage and optional current shall be collected at intervals less than or equal to 1 min.

NOTE In case of pulse-width modulation (PWM) controllers, aliasing effects (beat effects) can occur when data logging due to unsynchronised PWM frequency and sampling frequency of the current logger. This can lead to "chaotic" measurements which are difficult to interpret.

d) The minimum battery voltage observed over 24 h is the DUT's passive deep discharge battery protection voltage.

e) If the battery contains internal circuitry (refer to F.4.3.5) and the measured deep discharge protection voltage is outside of the targets specified by the manufacturer (D.3.2.2) or the DUT's battery voltage falls below the recommended deep discharge protection voltage specified in Annex L, the test may be repeated with the voltage data logger connected on the battery side of the internal circuitry, if the test laboratory determines that it is safe to do so.

f) If the low-voltage disconnect device stops the DUT's discharge during the test, record that the battery voltage reached the minimum battery testing voltage and that no passive deep discharge voltage was observed.

S.4.3.6 Calculations

There are no calculations for the passive deep discharge protection test.

S.4.4 Passive overcharge protection test

S.4.4.1 General

This method is only performed on DUTs with NiMH batteries that show no active deep discharge protection.

In some cases, the DUT's PV module's short circuit current alone ~~may~~ proves that the DUT has passive overcharge protection; otherwise, the DUT is overcharged and the charging current is observed to determine if the DUT has passive overcharge protection. If the product does not have a solar-charging option, the DUT shall be charged via its provided grid charger

IECNORM.COM : Click to view the full PDF of IEC TS 62257-9-5:2016 RLV
Withdrawn

or charged via its electromechanical charging process. This method is only performed on DUTs with NiMH batteries that show no active overcharge protection.

S.4.4.2 Equipment requirements

The following equipment is required. Equipment shall meet the requirements in Table CC.2.

- DC power supply or solar array simulator.
- DC ammeter or multimeter.
- ~~Current meter and/or multimeter (at least 1 % accuracy).~~
- ~~Data-logging voltage measurement device (optional).~~
- Voltage data logger (optional).
- ~~Data-logging current measurement device~~ Current data logger (e.g., voltage data logger with a current transducer) (optional)
- Series resistor or series and parallel resistors (or variable resistors) for simulating PV input (when using a DC power supply as opposed to a solar array simulator)
- AC power adapter supplied with the DUT (for DUTs with a grid-charging option and no solar-charging option).
- Surface-mounted thermocouple(s) and a thermocouple reader with a precision less than 2 °C (optional).

The total series resistance added by the test apparatus and all measurement equipment shall be no more than 60 mΩ. This value includes the resistance of the wires and connectors, if any, added in the sample preparation procedure (G.4.4).

S.4.4.3 Test prerequisites

The DUT shall have undergone the active overcharge protection test, such that its battery voltage has just passed its recommended overcharge protection voltage (Table L.2) when charging or, if the battery voltage does not reach the recommended overcharge protection voltage, the battery has reached the maximum voltage observed during the active overcharge protection test (i.e. the battery voltage has levelled off or peaked and begun to decrease).

S.4.4.4 Apparatus

The DUT shall be set in a secure location such that its parameters ~~may~~ can be monitored and/or data-logged. If the DUT has a solar-charging option, the DUT is charged via the PV module socket from a DC power supply using a series resistor or series and parallel resistor identical to those used in the active overcharge protection test (S.4.2.4).

S.4.4.5 Procedure

The following steps shall be followed if the DUT has a solar charging option and the product's battery-charging circuit does not include a DC-DC converter (see R.4.4, step p)).

a) Determine the accepted passive overcharge protection continuous battery charging current. A passive overcharge protection continuous battery charging current of less than or equal to 0,2 I_t A is recommended for NiMH batteries.

b) Compare the PV module's short-circuit current at STC (I_{sc}) to the passive overcharge protection continuous battery charging current (I_{sc} may be obtained from the outdoor photovoltaic module I-V characteristics test (Annex Q)). If I_{sc} is the smaller of the two, the DUT has passive overcharge protection and no further testing is necessary.

c) Convert the PV module's STC I-V pairs from the outdoor photovoltaic module I-V characteristics test (Annex Q) to typical module operating temperature (TMOT), where TMOT is defined as 50 °C cell temperature and solar irradiance of 1 000 W/m^2. Refer to Q.4.3.5.4 of Annex Q for conversion formulas.

IECNORM.COM : Click to view the full PDF of IEC TS 62257-9-5:2016 RLV
Withdrawn

d) Plot the TMOT I-V curve.

e) If the passive overcharge protection test follows the active overcharge protection test using a parallel resistor (Figure R.1), use the same current limiting and voltage values and resistor values that were used in the active overcharge protection test (S.4.2.5).

f) If the passive overcharge protection test follows the active overcharge protection test using a solar array simulator, use the same solar array simulator configuration that was used in the active overcharge protection test (S.4.2.5).

g) If the passive overcharge protection test follows the active overcharge protection test without a ~~parallel~~ series resistor only (Figure S.1), set the current limiting and voltage values of the DC power supply to the PV module's maximum power point current at TMOT, $I_{mpp,TMOT}$ and $V_{oc,TMOT}$ (refer to the results of the outdoor photovoltaic module I-V characteristics test (Annex Q)), respectively. Use the same series resistor value as was used in the active overcharge protection test (S.4.2.5).

h) Connect the DC power supply via the resistor(s) and the product's entire PV cable to the DUT's PV module input socket. Let charge for 5 min. After the 5 min period is complete, ~~calculate~~ determine the voltage drop, V_{drop}, between the power supply's output and the DUT's battery terminals. If the DUT is has an integrated PV module, connect the DC power supply to the ends of the internal leads where the PV module connects to the DUT's circuitry. Optionally, monitor the DUT's battery temperature to ensure that it does not exceed ~~45 °C~~ a safe value (refer to Table L.2). If temperature monitoring is used, lithium-based batteries shall not be allowed to exceed 45 °C unless higher temperatures are allowed by the battery manufacturer.

i) Add V_{drop} to the battery end of the charge voltage, V_{charge}, which is determined by multiplying the number of battery cells by the recommended overcharge protection voltage for NiMH batteries (Table L.2). This is the total charge voltage, V_{max}.

j) Plot a vertical line at V_{max} on the TMOT I-V curve (see part d)) that extends from the voltage axis to the I-V curve.

k) Plot a horizontal line that intersects the TMOT I-V curve at the same point V_{max} does and extends to the current axis. The current where the horizontal line intersects the current axis is the charging current.

l) If the charging current is less than or equal to 0,2 I_t A, the DUT has passive overcharge protection.

These steps shall be followed if the DUT does not have a solar charging option or if the DUT utilizes a DC-DC converter.

m) Determine the DUT's accepted passive overcharge protection continuous battery charging current. A passive overcharge protection continuous battery charging current of less than or equal to 0,2 I_t A is recommended for DUT's with NiMH batteries.

n) Compare the passive overcharge protection continuous battery-charging current to the average charging current observed over the final 5 min from when carrying out the active overcharge protection procedure (S.4.2). If the average charging current is the smaller of the two, the DUT has passive overcharge protection.

S.4.4.6 Calculations

There are no calculations for the passive overcharge protection test.

S.4.5 Standby loss measurement

S.4.5.1 General

This measurement quantifies the standby loss of a DUT when not in use. If the standby loss is substantial, it ~~may~~ can affect the use of the DUT. The DUT shall be configured to best simulate how it would be left in the home while not in use.

IECNORM.COM : Click to view the full PDF of IEC TS 62257-9-5:2016 RLV

S.4.5.2 Equipment requirements

An ammeter ~~with a precision of 0,01 mA~~ m(data-logging functionality is optional) and a timer. Equipment shall meet the requirements in Table CC.2.

S.4.5.3 Test prerequisites

Set the DUT's battery to a 50 % state of charge. The DUT's battery should be discharged to its LVD or, in the case of the DUT not having a LVD, the specified deep discharge protection voltage threshold (see S.4.1).

If the DUT's battery needs to be charged, charge the battery using one of the two procedures according to the DUT's battery chemistry:

- If the DUT's battery is of NiMH chemistry, then use the procedures in the battery test (Annex K) – either the overcharge or negative slope charging methods in K.4.3.1.
- If the DUT's battery is of any other chemistry, then use the procedures in the active overcharge protection test (S.4.2). If the DUT's solar module has not yet been tested, then set up the apparatus according to Figure S.1 and set the current limit to the rated maximum power point current at STC, I_{mpp}.

After the battery is fully charged, turn the DUT on its brightest setting. Stop the discharge once the discharge duration equals 50 % of the DUT's full-battery run time ±25 %.

S.4.5.4 Apparatus

The DUT shall be set in a secure location such that its battery's current draw ~~may~~ can be recorded for 15 min.

S.4.5.5 Procedure

The following steps shall be followed.

a) Configure the DUT to simulate how it would be left in the home while not in use. Connect all the included appliances to the product that can be turned off with an on/off switch. For example, it is unlikely that a user unplugs a light point that has an on/off switch every time he or she wants to turn off the light; it is more likely that the user will turn off the light point via its switch. If the DUT does not have enough ports to connect all the included appliances that have on/off switches, connect the appliances that are estimated to maximize the standby loss. In addition, turn on/off system power switches on. For example, if the DUT's control box has a system on/off switch that connects the DUT's battery to the rest of the system, keep the switch in the on position. It is unlikely that a user will turn the system's power switch off when the system is not in use.

b) For DUT's with separate solar modules, connect the DUT's solar module. For all DUT's with solar modules, prevent light from reaching the PV material (e.g. cover the solar module with an opaque dark cloth or turn the module upside down so that its PV material is facing downwards over an opaque surface).

c) Break the DUT's circuit at the battery's negative terminal, connect the current meter in series, and ensure that all power buttons and switches on the DUT are turned off.

d) Wait 5 min to allow the DUT to stabilize. Then, over a 10 min period, record (or data-log) the current draw at the battery's negative terminal at intervals less than or equal to 1 min.

e) Report the average battery current draw over the 10 min data-collection period.

S.4.5.6 Calculations

~~Determine the fraction of capacity the battery self-consumes over a 30-day period using the following formula:~~

IECNORM.COM : Click to view the full PDF of IEC TS 62257-9-5:2016 RLV
Withdrawn

~~$$F_{b,self} = \frac{I_{avg,self} \times (720\,h/30\,days)}{C_b}$$~~

~~where~~

~~$F_{b,self}$ is the fraction of the battery's measured capacity that is drawn from the product's battery with the product switched off over 30 days (%);~~

~~$I_{avg,self}$ is the average battery current draw over the 10-min data-collection period, in milliamperes (mA);~~

~~C_b is the measured battery capacity, in milliampere-hours (mAh), obtained from the battery test (Annex K).~~

There are no calculations for the standby loss measurement.

S.5 Reporting

Report the following in the charge controller behaviour test report ~~(a sample template is provided in Annex X)~~.

- Metadata:
  - report name;
  - procedure(s) used;
  - DUT manufacturer;
  - DUT name;
  - DUT model number;
  - name of test laboratory;
  - approving person;
  - date of report approval.
- Results for tested DUT aspects for samples 1 through n:
  - presence of active deep discharge protection (yes/no);
  - active deep discharge protection voltage, if applicable (V);
  - presence of active overcharge protection (yes/no);
  - active overcharge protection voltage, if applicable (V);
  - presence of passive deep discharge protection (yes/no);
  - passive deep discharge voltage (V/cell);
  - presence of passive overcharge protection (yes/no);
  - passive overcharge protection continuous charging current (mA);
  - ~~30-day battery~~ standby loss ~~fraction (decimal)~~ current (A).
- Average of n sample results for each DUT aspect tested.
- Coefficient of variation of n sample results for each DUT aspect tested (%).
- DUT's rating for aspects tested, if available.
- Deviation of the average result from the DUT's rating for each aspect tested, if available (%).
- Comments:
  - individual comments, as necessary, for samples 1 through n
  - overall comments, as necessary, for collective set of samples 1 through n. In particular, include an assessment of the appropriateness of the charge control strategy given the information available.

IECNORM.COM : Click to view the full PDF of IEC TS 62257-9-5:2016 RLV
Withdrawn

- Figures:
  - plot of the PV module's new, realistic-temperature I-V curve with lines indicating the presence of passive overcharge protection, if applicable.

Withdrawn
IECNORM.COM : Click to view the full PDF of IEC TS 62257-9-5:2016 RLV

Annex T
(normative)

Light distribution test

T.1 Background

Luminous flux and light distribution are two primary metrics used to assess the performance of a lighting product. Measurements of luminous flux (the total amount of light emitted by a source) are appropriate for any type of light and are discussed in Annex I. Measurements of light distribution are also appropriate for any type of light, with particular relevance to the performance of task lights that have focused light outputs.

The light distribution of ~~solar LED lights~~ lighting appliances can vary greatly, ranging from very narrow-beam task lights to omnidirectional ambient lights. While there is no distribution that is necessarily "ideal," some distributions are more appropriate for certain applications than others. Annex T is intended to characterize a product's light distribution so purchasers can select products that are appropriate for the applications in which they are used.

The most common applications for ~~solar LED lights~~ lighting appliances are:

- ambient lighting,
- task lighting from a mounted or suspended fixture, and
- task lighting from a fixture placed on the surface to be illuminated (e.g. a desk light).

Ambient lights, products that have ~~very~~ wide or omnidirectional light output, are best characterized by measuring total luminous flux (Annex I). A full width half maximum (FWHM) angle measurement may be used to help categorize a light distribution (ambient or task), and some lights may be considered for both ambient and task lighting applications. In circumstances where it is not clear how to classify a light, both luminous flux and light distribution testing is appropriate.

Task lights that have ~~narrow, focused, or~~ directed light distributions may be characterized by measuring the illuminance on a specified task plane. The task plane used in the light distribution ~~annex~~ test is 1 m^2 and is positioned relative to the DUT according to the type of task light use (desk light or suspended light).

T.2 Test outcomes

The light distribution test outcomes are listed in Table T.1.

IECNORM.COM : Click to view the full PDF of IEC TS 62257-9-5:2016 RLV
Withdrawn

Table T.1 – Light distribution test outcomes

Metric	Reporting units	Related aspects	Notes
Vertical and horizontal full width half maximum (FWHM) angles	Degrees (°)	4.2.9.2 Full width half maximum (FWHM) angle 4.2.9.3 Average light distribution characteristics	--
Usable area with illuminance greater than a specified threshold	Area (m^2)	4.2.9.3 Average light distribution characteristics	Determined from a specified distance
Work surface illuminance	Lux (lx)	4.2.9.3 Average light distribution characteristics	Maximum possible over testing surface
Luminous flux	Lumens (lm)	4.2.9.1 Average luminous flux output	Only obtained when using multi-plane (T.4.3) or goniophotometer (T.4.2) test methods

T.3 Related tests

The light distribution test is related to the light output test (Annex I) ~~and the full battery run time test (Annex M)~~. Specifically, either the multi-plane method described in I.4.3 of Annex I or the goniophotometer method described in I.4.2 may be used to gather all needed data to generate polar plots, surface plots, and FWHM ~~calculations~~ angles for ambient and suspended task lights.

T.4 ~~Recognized~~ Approved test methods

T.4.1 General

As discussed above, this module utilizes three different test procedures to characterize DUTs based on their expected use application. For DUTs where the intended application is not clear or which ~~may be~~ are designed to be used in multiple applications, conduct distribution tests using multiple procedures.

Furthermore, there are multiple approved methods for two of the three test procedures (ambient and suspended task). Each of the approved options and their associated apparatus are described in T.4.1. Table T.2 summarizes the three different applications covered, the approved test methods for each application, and the test outcomes for each of the approved test methods.

Each relevant method employed in the light distribution test shall be completed on a sample size of two. If more than one identical lighting appliance is included with the DUT kit, it is only necessary to test one of each type of identical lighting appliances. Also, if the DUT has multiple unique lighting appliances, each unique lighting appliance shall be tested.

IECNORM.COM : Click to view the full PDF of IEC TS 62257-9-5:2016 RLV

Table T.2 – Summary of testing options for characterizing lamp distributions

Test method	Application(s)	Test outcomes
Goniophotometer or multi-plane	Ambient light Suspended task light Desktop task light	• Vertical and horizontal FWHM angles • Usable area with illuminance greater than a specified threshold • Luminous flux (see Annex I) • Work surface illuminance
Illuminance on a plane	Ambient light Suspended task light	• Usable area with illuminance greater than a specified threshold • Vertical and horizontal FWHM angles, if determined • Work surface illuminance
~~Rotary disk~~ Turntable	Ambient light Suspended task light	• Vertical and horizontal FWHM angles
Illuminance on a desktop	Desktop task light	• ~~Vertical and horizontal FWHM angles~~ • Usable area with illuminance greater than a specified threshold • Work surface illuminance

~~Ambient lights are typically tested to determine the total luminous flux output.~~

The following steps shall be followed before performing the test by any method.

a) Determine the "horizontal" and "vertical" planes for the purposes of the light distribution measurement, using the following guidelines. Describe the selected orientation in the test report. Photographs or diagrams can be useful in describing the product orientation, but are not required if the text description is unambiguous.

   1) These guidelines consider two types of light points: omnidirectional and directed. If the distribution of illuminance is measured on an imaginary sphere surrounding an omnidirectional product, the maximum illuminance will occur at the equator and local minima will occur at the poles. For a directional product, the maximum illuminance will occur at one pole and the minimum will occur at the other pole. Typical omnidirectional light points include lanterns and some bulbs; typical directed light points include torches and suspended task lights.

   2) For an omnidirectional light point, the horizontal plane is the plane of maximum illuminance, typically parallel to the ground, and the vertical plane is the plane perpendicular to the horizontal plane containing the point of maximum illuminance. In some cases there are multiple possible choices of vertical plane, if the maximum illuminance value occurs at more than one point. In this case, the test laboratory should select one plane to measure. See Figure T.1.

IECNORM.COM : Click to view the full PDF of IEC TS 62257-9-5:2016 RLV
Withdrawn

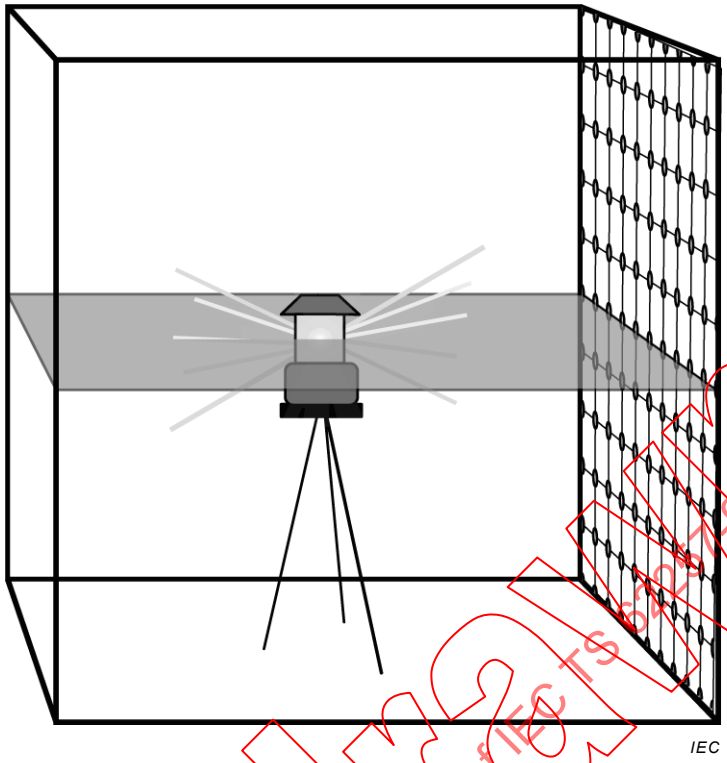

Figure T.1 – Horizontal plane for determining FWHM angle and radial illuminance distribution, for an omnidirectional light point

3) Some directed light points have identifiable top and bottom surfaces. For example, the bottom surface could be flat for desktop mounting and the power button could be located on the top of the light point. In this case, the vertical plane is the plane that contains the point of maximum illuminance and the centres of the top and bottom surfaces of the light point, and the horizontal plane is the plane perpendicular to the horizontal plane that contains the point of maximum illuminance. See Figure T.2.

IECNORM.COM : Click to view the full PDF of IEC TS 62257-9-5:2016 RLV
Withdrawn

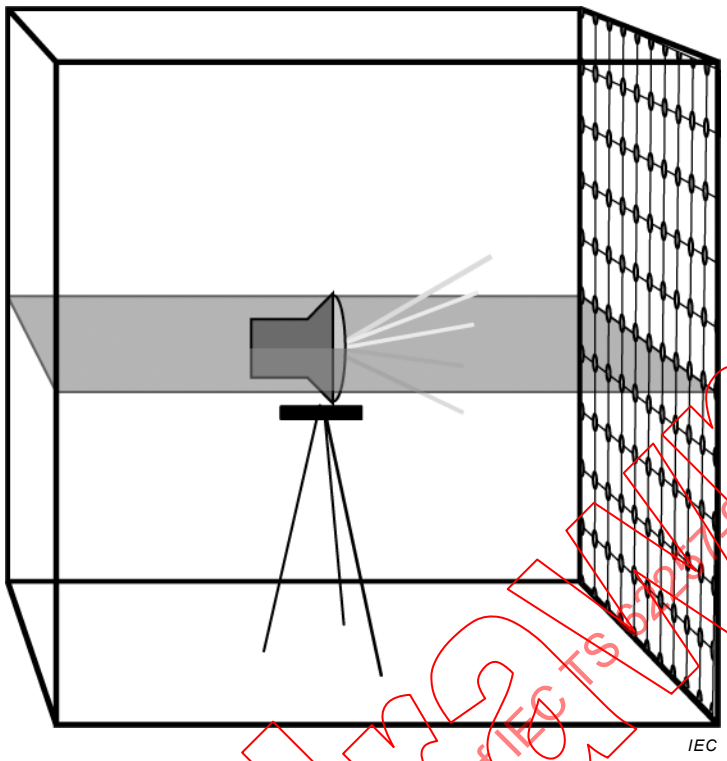

Figure T.2 – Horizontal plane for determining FWHM angle and radial illuminance distribution, for a directed light point

4) For light points with no identifiable top and bottom, the choice of horizontal and vertical planes may be arbitrary.

5) If the light point contains a two-dimensional array of light sources (e.g. LEDs) and multiple choices of horizontal and/or vertical planes are available following the above criteria, it is preferable to align the light point such that the intersections of the horizontal and vertical planes with the array plane are lines of symmetry of the array configuration, if possible. For example, if the product contains LEDs in a grid pattern, the grid lines should be parallel with the horizontal and vertical plane.

6) If the light point contains a three-dimensional array of light sources (e.g. LEDs) and multiple choices of horizontal and/or vertical planes are available following the above criteria, it is preferable to align the light point such that the horizontal and vertical planes are planes of symmetry of the array configuration, if possible. For example, if the light point contains four LED PCBs with outward-facing LEDs at 90° angles, the vertical plane could be chosen to pass through the centres of two of the LED PCBs.

7) In all cases, the intersection of the horizontal and vertical planes should contain the line segment that connects the centre of the light source with the point of maximum illuminance.

8) Sometimes, as in the case of LED bulbs, it can be difficult to determine whether a light point should be treated as omnidirectional prior to conducting the test. In some cases, it is necessary to perform the test with multiple choices of horizontal and vertical planes. Generally, the radial distribution of illuminance in the vertical plane of an omnidirectional product will have two local maxima at or near 90° and 270°. If a light point is tested as directed but exhibits this characteristic, or if the horizontal and vertical FWHM angles are greater than 180°, the possibility should be considered that the light point should be tested as directed.

NOTE The terms "horizontal" and "vertical" are used for notational convenience; the horizontal and vertical planes for the purposes of light distribution are not necessarily horizontal and vertical relative to the ground when the light point is in use or when the measurement is being performed. The orientation of the light point in the laboratory does not necessarily correspond to the product's intended use.

b) Prepare the test sample for lighting evaluation as described in I.4.1.

IECNORM.COM : Click to view the full PDF of IEC TS 62257-9-5:2016 RLV
Withdrawn

T.4.2 Goniophotometer

A goniophotometer may be used to measure both the light distribution characteristics of a light source and also the total luminous flux. Operation of a goniophotometer is beyond the scope of this part of IEC 62257, and testing with a goniophotometer device should ~~refer~~ be conducted according to the following standard test methods, with the DUT operated using the average operating voltage as described in Annex I:

- CIE 084~~: The Measurement of Luminous Flux~~
- CIE 127~~: Measurement of LEDs~~
- IESNA LM-79-08~~: Electrical and Photometric Measurement of Solid State Lighting Products~~

T.4.3 Multi-plane method

T.4.3.1 General

The multi-plane method, described in I.4.3, can be used to measure luminous flux and characterize light distribution of ambient lights, suspended task lights, and desktop task lights. For characterizing the light distribution of desktop task lights, depending on the details of the intended application, the illuminance on a desktop method (T.4.6) is generally more appropriate; the multi-plane and illuminance on a desktop methods may be used in conjunction to obtain both luminous flux and light distribution characteristics.

T.4.3.2 Equipment requirements

The following equipment is required. Equipment shall meet the requirements in Table CC.2.

- Multi-plane test apparatus (described in Annex I).
- DC power supply.
- Illuminance meter.
- DC voltmeter ~~(at least 0,5 % accuracy)~~ or multimeter.
- DC ammeter.

T.4.3.3 Test prerequisites

~~Specify the distance and minimum illuminance necessary to meet useable area requirements (these values will usually depend on the testing standard used). The DUT's battery voltage and current draw corresponding to the average light output over the L_{70} run time is required. Preparation of DUT for lighting evaluation as described in Annex G. Before measurement, the battery of the DUT shall be replaced by a DC power supply.~~

The product specification shall define the distance(s) at which the usable area, work surface illuminance, and radial distribution of illuminance are to be determined and the minimum illuminance to be used in the usable area calculation. Distances shall be specified as the distance from the grid surface to the centre of the light point. The DUT's battery voltage and current draw corresponding to the average light output over the L_{70} run time are required. The DUT shall be prepared for lighting evaluation as described in Annex G. Before measurement, the battery of the DUT shall be replaced by a DC power supply.

T.4.3.4 Apparatus

The multi-plane apparatus is described in I.4.3.

T.4.3.5 Procedure

The test procedures for determining the ambient light characterization are the same procedures as those used to determine total luminous flux and are described in I.4.3.5. This procedure needs only to be conducted once per test sample to gather all necessary

Withdrawn
IECNORM.COM : Click to view the full PDF of IEC TS 62257-9-5:2016 RLV

information needed to calculate luminous flux (as detailed in Annex I), usable area, work surface illuminance, and FWHM angles. This test shall be completed on two test samples, i.e. a sample size of two.

T.4.3.6 Calculations

Since the multi-plane method requires the DUT to be positioned so that its centre point is at a distance of 0,5 m from the lighting distribution grid surface, the measurements shall be adjusted by performing the following calculations:

a) Correct for differences in measurement distance by adjusting the illuminance values to ~~a specified~~ the desired distance for only the measurements on the first ~~measured~~ surface ~~of the 1 m² grid (i.e., the surface containing the highest light output provided by the DUT)~~ measured in the multi-plane method (i.e. the surface containing the point of maximum illuminance). ~~Do so by multiplying each measured lux value by the square of the ratio between the actual measurement distance and the specified distance (the specified distance is determined in T.4.4.2).~~ Use the following formula:

$$E_{v,adj} = E_{v,surf}\left(\frac{y_{surf}}{y_{spec}}\right)^2$$

where

$E_{v,adj}$ is the illuminance adjusted for distance, in lux (lx);

$E_{v,surf}$ is the measured illuminance on the grid surface, in lux (lx);

y_{surf} is the distance between the centre of the grid surface and the DUT during the test (0,5 m), in metres (m);

y_{spec} is the distance at which usable area and work surface illuminance are to be determined (see T.4.3.3), in metres (m).

~~b) Sum the number of illuminance readings equal to or greater than a specified minimum illuminance. Each reading corresponds to 100 cm². Multiply the number of readings by 100 cm² to obtain the total usable area for the specified minimum illuminance threshold determined in T.4.4.2 (a maximum usable area of 1,21 m² is achievable when taking 121 measurements).~~

b) Calculate the average of the illuminance adjusted for distance ($E_{v,adj}$) over all possible regions of the first measured 1 m² grid surface that are composed of twelve illuminance values in a four by three configuration. The maximum of the calculated averages is the DUT's work surface illuminance.

NOTE 1 The work surface dimensions were selected to correspond to two adjacent sheets of A4 paper.

c) Count the number of illuminance values equal to or greater than the specified minimum illuminance (see T.4.3.3). Each value corresponds to 0,01 m². Multiply the number of values by 0,01 m² to obtain the total usable area. (A maximum usable area of 1,21 m² is achievable when taking 121 measurements.)

d) Repeat step c) for a range of minimum illuminance values. See Table T.3 for an example of determining the usable area for a range of minimum illuminance values.

e) Plot the usable area as a function of minimum illuminance ~~for each of the DUT's settings tested on the same plot~~. Plot the values for each of the tested settings on the same plot. The domain of the plot shall include the maximum illuminance value for the DUT's brightest setting. See Figure T.7 for an example of a plot showing usable area as a function of minimum illuminance.

f) ~~Plot the illuminance readings on the brightest "face" of the 1 m² grid over a three-dimensional surface.~~ Create a three-dimensional surface plot showing the illuminance values on the brightest surface of the 1 m² grid. See Figure T.8 for an example of a three-dimensional surface plot.

In order to generate polar plots of the distribution and to calculate FWHM angles, the data collected by the multi-plane method will need to be adjusted to estimate the illuminance on

IECNORM.COM : Click to view the full PDF of IEC TS 62257-9-5:2016 RLV
Withdrawn

the inner surface of a virtual sphere centred on the DUT's light source. ~~Measurements taken by the multi-plane method are at a variety of distances from the test source to the sensor (shorter near the centre of the test plane and further near the edge of the test plane) and are at a variety of angles (normal at the centre of the test plane and at increasing angles off-normal approaching the edge of the test plane). To accurately plot distribution and calculate FWHM angles, these values shall be "corrected" so they represent a "virtual sphere" of readings around the DUT in which each reading is converted to the same distance and measurement angle. These calculations are only valid if the distance from the light source to the actual measurement is at least five times the longest dimension of the emissive surface of the DUT.~~ These calculations are only valid if the distance from the light source to the illuminance meter is at least five times the longest dimension of the emissive surface of the DUT. If this condition is not met, the polar plots shall be generated and FWHM angles determined using the goniophotometer (T.4.2) or turntable (T.4.5) method.

g) Correct the original ~~multi-plane measurements~~, measured illuminance values ($E_{v,surf}$) for differences in measurement distance by adjusting ~~the illuminance values to a 1 m distance for all of the measurements~~ each measured illuminance value to a constant distance from the DUT, using the following formula: ~~Do so by multiplying each measured lux value by the square of the ratio between the actual measurement distance and the specified distance.~~

$$E_{v,d} = E_{v,surf} \frac{x^2 + z^2 + y_{surf}^2}{R^2}$$

where

$E_{v,d}$ is the illuminance adjusted to a constant distance from the light source, in lux (lx);

$E_{v,surf}$ is the measured illuminance on the grid surface, in lux (lx);

x is the horizontal position of the illuminance meter relative to the centre of the grid, in metres (m);

z is the vertical position of the illuminance meter relative to the centre of the grid, in metres (m);

y_{surf} is the distance between the centre of the grid surface and the DUT during the test (0,5 m), in metres (m);

R is the distance at which the radial distribution of illuminance is to be determined (see T.4.3.3), in metres (m).

NOTE 2 The coordinate axes are oriented according to Figure I.1, with the origin at the DUT's light source; that is, at the centre of the grid, $x = 0$, $z = 0$, and $y = y_{surf}$. The numerator of the fraction in the formula is the distance, in metres, from the illuminance meter to the DUT.

NOTE 3 Only those values that will be used in further calculations need to be corrected. Typically, this is the set of values lying in the horizontal and vertical planes, as described in steps i) and j) below.

h) Next, correct for differences in measurement angle so that the illuminance values represent ~~flux that is normal to the virtual sphere surface~~ the illuminance on the inner surface of a sphere of radius R centred at the DUT's light source, using the following formula: ~~Divide each measured illuminance value by the cosine of the angle between the beam and the original measurement surface.~~

$$E_{v,sphere} = \frac{E_{v,d}}{\cos\theta} = E_{v,d} \frac{\sqrt{x^2 + z^2 + y_{surf}^2}}{R}$$

where

$E_{v,sphere}$ is the illuminance on the virtual sphere, in lux (lx);

$E_{v,d}$ is the illuminance adjusted to a constant distance from the light source, in lux (lx);

θ is the angle between a line connecting the DUT and the illuminance meter and a line connecting the DUT and the centre of the grid;

IECNORM.COM : Click to view the full PDF of IEC TS 62257-9-5:2016 RLV
Withdrawn

x is the horizontal position of the illuminance meter relative to the centre of the grid, in metres (m);

z is the vertical position of the illuminance meter relative to the centre of the grid, in metres (m);

y_{surf} is the distance between the centre of the grid surface and the DUT during the test, in metres (m);

R is the distance at which the radial distribution of illuminance is to be determined (see T.4.3.3), in metres (m).

~~h) The total included angle for which the illumination is greater than or equal to half the illumination at the brightest point in the plane is the FWHM angle for a given orientation (horizontal or vertical, typically). Report horizontal and vertical FWHM angles separately.~~

i) Calculate the horizontal FWHM angle using the following steps.

1) Identify the illuminance values on the virtual sphere ($E_{v,sphere}$) that lie on the horizontal plane (parallel to the ground) that intersects the centre of the brightest surface of the 1 m^2 grid (Figure T.1 and Figure T.2). The point of maximum illuminance should fall on this plane.

2) For each illuminance value in the horizontal plane, calculate the angle between the Y axis (as defined in Figure I.1, with the origin of the coordinate system at the DUT) and the line connecting the DUT's light source and the location of the illuminance measurement. Tabulate the illuminance ($E_{v,sphere}$) as a function of angle.

3) Calculate the half-maximum illuminance ($E_{v,1/2}$), which is half of the maximum value of $E_{v,sphere}$ in the plane identified in step (1).

4) Linearly interpolate between adjacent illuminance values (as a function of angle) to identify the regions over which the illuminance $E_{v,sphere}$ is greater than $E_{v,1/2}$.

5) Calculate the FWHM angle as the total angle subtended by the regions where $E_{v,sphere}$ is greater than $E_{v,1/2}$. If there are multiple regions over which the illuminance is greater than or equal to $E_{v,1/2}$, the FWHM angle is the sum of the angles subtended by all such regions. If there are no points for which the illuminance is less than $E_{v,1/2}$, the FWHM angle is 360°. See Figure T.3 for examples.

IECNORM.COM : Click to view the full PDF of IEC TS 62257-9-5:2016 RLV
Withdrawn

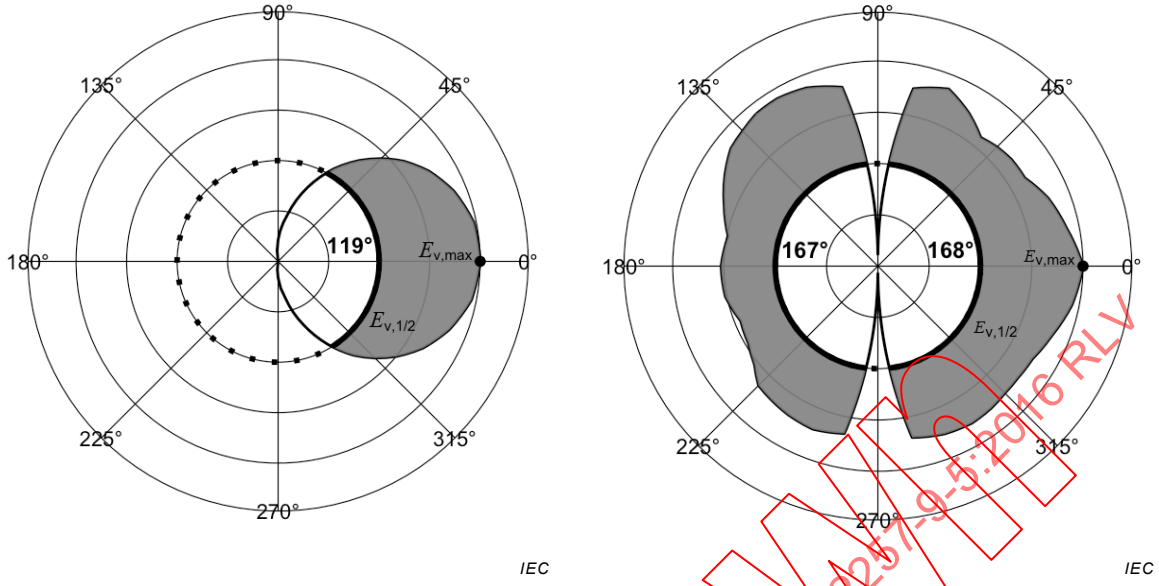

a) Suspended task light with FWHM = 119° **b) Omnidirectional ambient light with FWHM = 335°**

Key

$E_{v,max}$ Maximum illuminance (lx)

$E_{v,1/2}$ Half-maximum illuminance (lx)

NOTE The half-maximum illuminance ($E_{v,1/2}$) is indicated by the dotted line. The illuminance exceeds $E_{v,1/2}$ in the shaded areas. The sum of the angles subtended by the shaded areas is the FWHM angle.

Figure T.3 – Radial illuminance distributions for two example DUTs, showing the calculation of the FWHM angle

j) To calculate the vertical FWHM angle, repeat the previous step using the vertical plane that intersects the centre of the brightest surface of the 1 m^2 grid. (The point of maximum illuminance should be on the intersection of the horizontal and vertical planes.) Report horizontal and vertical FWHM angles separately.

k) Plot the radial distribution of illuminance ~~readings over the "horizontal" and "vertical" sweeps on two separate polar plots~~ in the horizontal and vertical planes on two separate polar plots. The "horizontal" sweep includes the brightest measurement and all of the measurements within the plane parallel to the ground during testing. The "vertical" sweep includes the brightest measurement and all of the measurements in the plane that is normal to the "horizontal" plane. See Figure T.9 for an example of a polar plot.

T.4.4 Illuminance on a plane method

T.4.4.1 General

In this test, an examination is made and a report given of the illumination level on a surface of 1 m^2. ~~Measurements shall be taken in a conditioned space such that the air temperature is 24 °C ± 3 °C.~~ This test measures the usable area and work surface illuminance. If the DUT's light distribution is sufficiently narrow, the FWHM angles can also be measured using this method. To measure wider FWHM angles, or if plots of the radial illuminance distribution are desired, this method may be used in conjunction with the turntable method (T.4.5). This test is appropriate for ambient and suspended task lights; ambient lights with very wide-angle or omnidirectional output should be tested using the goniophotometer (T.4.2), multi-plane (T.4.3), or turntable (T.4.5) method.

T.4.4.2 Equipment requirements

The following equipment is required. Equipment shall meet the requirements in Table CC.2.

- DC power supply.

IECNORM.COM : Click to view the full PDF of IEC TS 62257-9-5:2016 RLV
WITHDRAWN

- DC voltmeter or multimeter ~~(at least 0,5 % accuracy)~~.
- DC ammeter ~~(at least 1 % accuracy)~~.
- Illuminance meter.
- Lighting distribution grid testing surface.

T.4.4.3 Test prerequisites

~~Specify the distance and minimum illuminance necessary to meet useable area requirements (these values will usually depend on the testing standard used).~~ The product specification shall define the distance(s) at which the usable area, work surface illuminance, and radial distribution of illuminance are to be determined and the minimum illuminance to be used in the usable area calculation. The specified distance is 0,75 m to the centre of the light point unless a specification states otherwise. The DUT's battery voltage and current draw corresponding to the average light output over the L_{70} run time is required. ~~Preparation of~~ The DUT shall be prepared for lighting evaluation as described in Annex G. Before measurement, the battery of the DUT shall be replaced by a DC power supply. Measurements shall be taken in a conditioned space such that the air temperature is 24 °C ± 3 °C.

T.4.4.4 Apparatus

The apparatus for this test consists of a 1 m^2 measurement target with 121 evenly-spaced measurement points (spaced 10 cm apart), ~~a photometer~~ an illuminance meter, and a mechanism capable of mounting the DUT at the specified distance from the measurement target ~~0,75 m from the measurement target~~ (see Figure T.4). Testing ~~should~~ shall be done in a completely dark space, except for illumination provided by the DUT. The test operator should wear all-black clothing if required to be near to the measurement surface.

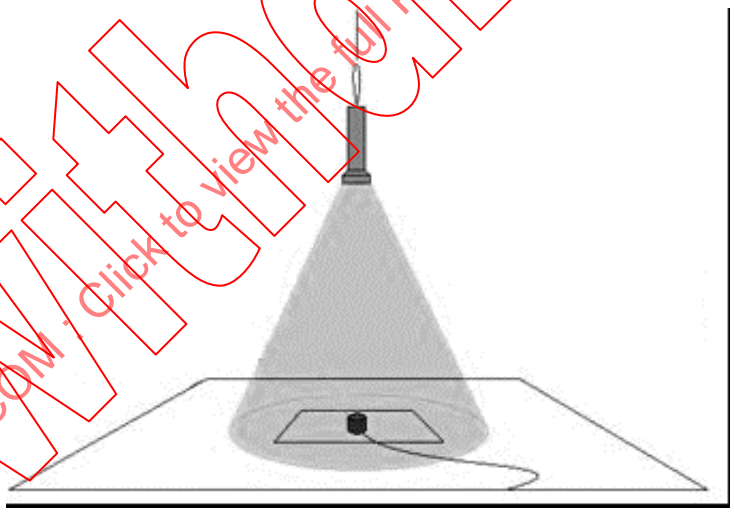

IEC

Figure T.4 – Schematic of a task light suspended ~~0,75 m~~ above ~~a photometer~~ an illuminance meter

T.4.4.5 Procedure

The following steps shall be followed.

a) Set the voltage of the power supply such that the voltage at the DUT is ~~at~~ equal to the average operating voltage of the battery (Annex M). Follow power supply guidelines in the power supply set up procedure (Annex H).

b) If at the desired voltage the DUT will not ~~perform~~ operate in the desired setting, increase the power supply voltage by increments of 0,05 V until the DUT is able to ~~perform~~ operate in the desired setting, then attempt to reduce the voltage to the desired level.

IECNORM.COM : Click to view the full PDF of IEC TS 62257-9-5:2016 RLV

~~c) Suspend the DUT at a specified distance from the top of the photometer head in a manner commensurate with the mounting device (preferably vertical) as shown in Figure T.1. The specified distance is determined from the testing standard used.~~

~~d) If the DUT features different brightness levels, the highest level shall be set.~~

~~e) The DUT shall be operated for at least 20 min before the first measurement is started.~~

~~f) Illuminance is measured in the centre of each measurement square on the test plane.~~

c) Position the DUT as shown in Figure T.4 so that the point of maximum illuminance is in the centre of the grid. The distance from the DUT's light source to the grid shall be equal to the distance at which the usable area and work surface illuminance are to be determined (see T.4.4.3). The DUT need not be suspended vertically; the measurement grid may be on a horizontal or vertical surface.

d) Operate the DUT for at least 20 min at the desired setting before the first measurement is started.

e) Measure illuminance at each of the 121 measurement points on the test plane. However, illuminance need not be measured for the grid points at which the illuminance is less than the resolution of the illuminance meter or less than 0,2 % of the maximum illuminance reading on the grid.

T.4.4.6 Calculations

The following calculations shall be made:

~~a) Sum the number of illuminance readings equal to or greater than a specified minimum illuminance. Each reading corresponds to 100 cm^2. Multiply the number of readings by 100 cm^2 to obtain the total usable area for the specified minimum illuminance threshold determined in T.4.5.3 (a maximum usable area of 1,21 m^2 is achievable when taking 121 measurements).~~

a) Calculate the average illuminance overall possible regions of the 1 m^2 grid surface that are composed of twelve illuminance values in a four by three configuration. The maximum of the calculated averages is the DUT's work surface illuminance.

b) Count the number of illuminance values equal to or greater than the specified minimum illuminance (see T.4.4.3). Each value corresponds to 0,01 m^2. Multiply the number of values by 0,01 m^2 to obtain the total usable area (a maximum usable area of 1,21 m^2 is achievable when taking 121 measurements).

c) Repeat step b) for a range of minimum illuminance values. See Table T.3 for an example of determining the usable area for a range of minimum illuminance values.

d) Plot the usable area as a function of minimum illuminance. Plot the values for each of the ~~DUT's~~ tested settings on the same plot. The domain of the plot shall include the maximum illuminance value for the DUT's brightest setting. See Figure T.7 for an example of a plot showing usable area as a function of minimum illuminance.

e) ~~Plot the illuminance readings on~~ Create a three-dimensional surface plot showing the illuminance values on the entire grid. See Figure T.8 for an example of a three-dimensional surface plot.

~~In some cases~~ For DUTs with sufficiently narrow light distributions, the FWHM angles can be determined from the illuminance on a plane method ~~for ambient and task lighting products~~. In order to calculate FWHM angles, the data collected by the illuminance on a plane method will need to be adjusted to estimate the illuminance on the inner surface of a virtual sphere centred on the DUT's light source. ~~Measurements taken by the illuminance on a plane method are at a variety of distances from the DUT's light source to the sensor (shorter near the centre of the test plane and further near the edge of the test plane) and are at a variety of angles (normal at the centre of the test plane and at increasing angles off-normal approaching the edge of the test plane). To accurately calculate FWHM angles, the values measured in the middle column and middle row of the lighting distribution grid surface, which include the brightest measured point, shall be "corrected" so they represent equidistant readings around the DUT.~~ These calculations are only valid if the distance from the light source to the ~~actual measurement~~ illuminance meter is at least five times the longest dimension of the emissive

IECNORM.COM : Click to view the full PDF of IEC TS 62257-9-5:2016 RLV
Withdrawn

surface of the DUT. If this condition is not met, the FWHM angles shall be determined using the goniophotometer (T.4.2) or turntable (T.4.5) method. If the FWHM angle cannot be determined because the distribution is too wide, the FWHM angles shall be determined using the goniophotometer (T.4.2), multi-plane (T.4.3), or turntable (T.4.5) method.

f) ~~Correct the original measurements for differences in measurement distance by adjusting the illuminance values to a 1 m distance for all of the measurements. Do so by multiplying each measured lux value by the square of the ratio between the actual measurement and the specified distance.~~
Correct the measured illuminance values for differences in measurement distance by adjusting each measured illuminance value to a constant distance from the DUT, using the following formula:

$$E_{v,d} = E_{v,surf} \frac{x^2 + z^2 + y_{surf}^2}{R^2}$$

where

$E_{v,d}$ is the illuminance adjusted to a constant distance from the light source, in lux (lx);

$E_{v,surf}$ is the measured illuminance on the grid surface, in lux (lx);

x is the horizontal position of the illuminance meter relative to the centre of the grid, in metres (m);

z is the vertical position of the illuminance meter relative to the centre of the grid, in metres (m);

y_{surf} is the distance between the centre of the grid surface and the DUT during the test (typically 0,5 m), in metres (m);

R is the distance at which the radial distribution of illuminance is to be determined (see T.4.4.3), in metres (m).

NOTE 1 The coordinate axes are oriented according to Figure I.1, with the origin at the DUT's light source; that is, at the centre of the grid, $x = 0$, $z = 0$, and $y = y_{surf}$. The numerator of the fraction in the formula is the distance, in metres, from the illuminance meter to the DUT.

NOTE 2 Only those values that will be used in further calculations need to be corrected. Typically, this is the set of values lying in the horizontal and vertical planes, as described in steps h) and i) below.

f) Next, correct for differences in measurement angle so that the illuminance values represent ~~flux that is normal to the virtual sphere surface~~ the illuminance on the inner surface of a sphere of radius R centred at the DUT's light source, using the following formula: ~~Divide each measured illuminance value by the cosine of the angle between the beam and the original measurement surface.~~

$$E_{v,sphere} = \frac{E_{v,d}}{\cos\theta} = E_{v,d} \frac{\sqrt{x^2 + z^2 + y_{surf}^2}}{R}$$

where

$E_{v,sphere}$ is the illuminance on the virtual sphere, in lux (lx);

$E_{v,d}$ is the illuminance adjusted to a constant distance from the light source, in lux (lx);

θ is the angle between a line connecting the DUT and the illuminance meter and a line connecting the DUT and the centre of the grid;

x is the horizontal position of the illuminance meter relative to the centre of the grid, in metres (m);

z is the vertical position of the illuminance meter relative to the centre of the grid, in metres (m);

y_{surf} is the distance between the centre of the grid surface and the DUT during the test, in metres (m);

Withdrawn
IECNORM.COM : Click to view the full PDF of IEC TS 62257-9-5:2016 RLV

R is the distance at which the radial distribution of illuminance is to be determined (see T.4.4.3), in metres (m).

~~g) The total included angle for which the illumination is greater than or equal to half the illumination at the brightest point in the plane is the FWHM angle for a given orientation (horizontal or vertical, typically). Report the horizontal and vertical FWHM angles separately. If the DUT's FWHM angle is not captured with the illuminance on a plane method, the DUT shall undergo the rotary disk method.~~

h) Calculate the horizontal FWHM angle using the following steps:

1) Identify the illuminance values on the virtual sphere ($E_{v,sphere}$) that lie on the horizontal plane (parallel to the ground) that intersects the centre of the brightest surface of the 1 m^2 grid (). The point of maximum illuminance should fall on this plane.

2) For each illuminance value on the horizontal plane, calculate the angle between the Y axis (as defined in Figure I.1, with the origin of the coordinate system at the DUT) and the line connecting the DUT's light source and the location of the illuminance measurement. Tabulate the illuminance ($E_{v,sphere}$) as a function of angle.

3) Calculate the half-maximum illuminance ($E_{v,1/2}$), which is half of the maximum value of $E_{v,sphere}$ in the plane identified in step (1).

4) Linearly interpolate between adjacent illuminance values (as a function of angle) to identify the regions over which the illuminance $E_{v,sphere}$ is greater than $E_{v,1/2}$.

5) Calculate the FWHM angle as the total angle subtended by the regions where $E_{v,sphere}$ is greater than $E_{v,1/2}$. If there are multiple regions over which the illuminance is greater than or equal to $E_{v,1/2}$, the FWHM angle is the sum of the angles subtended by all such regions. If the illuminance at the leftmost or rightmost point is greater than $E_{v,1/2}$, the FWHM angle cannot be determined using the illuminance on a plane method. See Figure T.3 for examples.

6) To calculate the vertical FWHM angle, repeat the previous step using the vertical plane that intersects the centre of the brightest surface of the 1 m^2 grid. (The point of maximum illuminance should be on the intersection of the horizontal and vertical planes.) Report horizontal and vertical FWHM angles separately.

T.4.5 ~~Rotating disk~~ Turntable method

T.4.5.1 General

~~This test will be performed with the help of a "rotary disk" (see Figure T.2). The DUT is placed on the rotary disk platform and illuminance is measured at a distance of one metre (centre point LED/LEDs to sensor). Testing should be done in a completely dark space, except for illumination provided by the DUT. Preparation of DUT for lighting evaluation as described in Annex G. Before measurement, the battery of the DUT shall be replaced by a DC power supply. Measurements shall be taken in a conditioned space such that the air temperature is 24 °C ± 3 °C.~~

This test measures the radial distribution of illuminance at a constant distance from the DUT. The turntable method is suited for ambient and suspended task lights. This method may be used in conjunction with the illuminance on a plane method to determine the FWHM angles, usable area, and work surface illuminance.

T.4.5.2 Equipment requirements

The following equipment is required. Equipment shall meet the requirements in Table CC.2.

- ~~Rotating disk~~ Turntable (see Figure T.5).
- DC power supply.
- Illuminance meter.
- DC voltmeter or multimeter ~~(at least 0,5 % accuracy)~~.

IECNORM.COM : Click to view the full PDF of IEC TS 62257-9-5:2016 RLV
Withdrawn

T.4.5.3 Test prerequisites

The product specification shall define the distance at which the radial distribution of illuminance is to be determined. The specified distance is 1 m unless the product specification states otherwise. ~~Preparation of test sample~~ The DUT shall be prepared for lighting evaluation as described in Annex G. Before measurement, the battery of the DUT shall be replaced by a DC power supply. Measurements shall be taken in a conditioned space such that the air temperature is 24 °C ± 3 °C.

T.4.5.4 Apparatus

This test ~~will be~~ is performed ~~with the help of a "rotary disk"~~ using a turntable (see Figure T.5). The DUT is placed on the ~~rotary disk platform~~ turntable and illuminance is measured at the distance ~~of 1 m (centre point LED/LEDs to sensor)~~ given in the product specification (from the centre of the DUT's light source to the illuminance meter sensor). Testing ~~should~~ shall be done in a completely dark space, except for illumination provided by the DUT. The test operator should wear all-black clothing if required to be near to the measurement surface. ~~Ensure that the light source is at the same level as the light sensor during the test and that the brightest light point is positioned closest to the light sensor.~~ Ensure that the centre of the DUT's light source is at the same height as the illuminance meter during the test and that the illuminance meter is positioned at the point of maximum illuminance. If tilting the DUT to position the illuminance meter at the point of maximum illuminance would result in an inaccurate measurement of the FWHM angle and radial illuminance distribution (for example, if the DUT is an omnidirectional ambient light), the DUT or illuminance meter may be raised or lowered instead. As an alternative to a turntable, an apparatus in which the illuminance meter is rotated or positioned at points at a constant distance around a stationary DUT may be used.

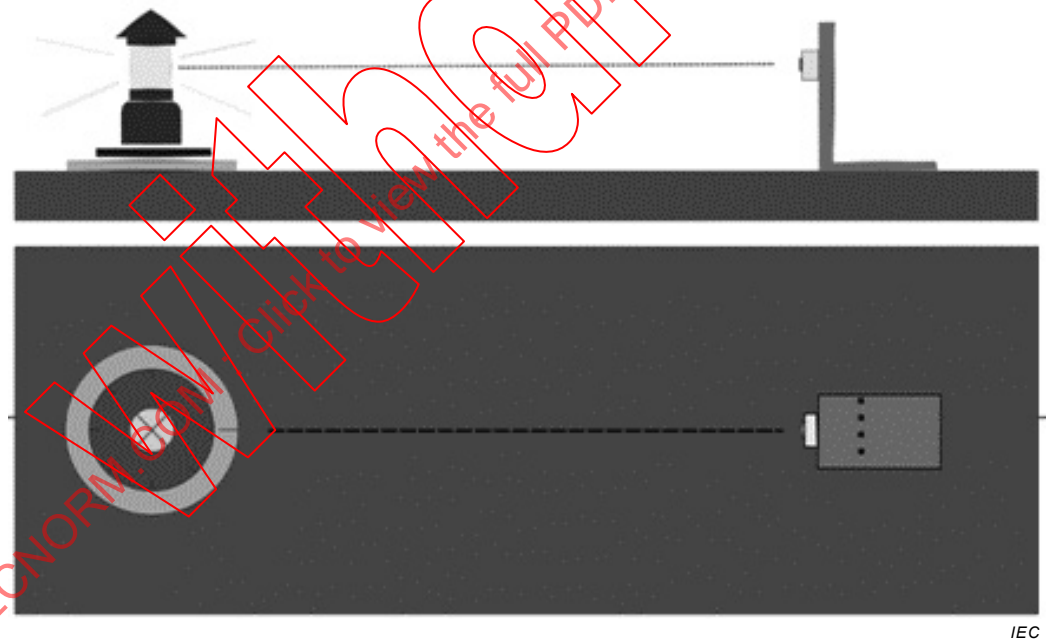

Figure T.5 – Schematic of ~~"rotary disk"~~ turntable setup, with the DUT shown

T.4.5.5 Procedure

The following steps shall be followed.

a) Set the voltage of the power supply such that the voltage at the product is ~~at~~ equal to the average operating voltage of the battery (Annex M) and use it to power the DUT, which should be resting ~~"normally"~~ or secured on the ~~rotary device~~ turntable so that the measured illuminance values lie in the horizontal plane shown in Figure T.1, with the illuminance meter at the point of maximum illuminance. Follow power supply guidelines in the power supply setup procedure (Annex H). The distance from the centre of the DUT's

IECNORM.COM : Click to view the full PDF of IEC TS 62257-9-5:2016 RLV
Withdrawn

light source to the illuminance meter should be equal to the distance at which the radial distribution of illuminance is to be measured (see T.4.5.3).

b) If at desired voltage the DUT will not ~~perform~~ operate at the desired setting, increase the power supply voltage by increments of 0,05 V until the DUT is able to ~~perform~~ operate at the desired setting, then attempt to reduce the voltage to the desired level.

c) Operate the DUT for at least for 20 min at the desired setting before the first measurement is started.

d) Measure illuminance levels at least every 10° sweep for the full 360° angle. However, measurements need not be taken for angles at which the illuminance value is known to be less than the resolution of the illuminance meter or less than 0,2 % of the illuminance at the brightest point. Further, if the FWHM angles are captured after measuring the illuminance levels over the brightest 180°, additional measurements need not be performed.

e) Repeat the procedure with the DUT resting at an orientation normal to the "horizontal" orientation. This will allow measurement of a "vertical" sweep. A special apparatus may be required to secure the DUT in this orientation.

T.4.5.6 Calculations

The following calculations shall be made:

~~a) The total included angle for which the illumination is greater than or equal to half the illumination at the brightest point in the plane is the FWHM angle for a given orientation (horizontal or vertical, typically). Report the horizontal and vertical FWHM angles separately.~~

a) Calculate the horizontal FWHM angle using the following steps.

   1) Calculate the half-maximum illuminance ($E_{v,1/2}$), which is half of the maximum illuminance value from the horizontal sweep.

   2) Identify the regions from the horizontal sweep over which the measured illuminance is greater than $E_{v,1/2}$. If the angular resolution of the measurements performed in T.4.5.5 is coarser than 2°, linearly interpolate between measurements (as a function of angle) to obtain finer resolution.

   3) Calculate the FWHM angle as the total angle subtended by the regions where the measured illuminance is greater than $E_{v,1/2}$. If there are multiple regions over which the illuminance is greater than or equal to $E_{v,1/2}$, the FWHM angle is the sum of the angles subtended by all such regions. If there are no points for which the illuminance is less than $E_{v,1/2}$, the FWHM angle is 360°. See Figure T.3 for examples.

b) To calculate the vertical FWHM angle, repeat the previous step using the measurements from the vertical sweep. Report horizontal and vertical FWHM angles separately.

c) Plot the illuminance values readings over the "horizontal" and "vertical" sweeps as two separate polar plots. See Figure T.8 for an example of a polar plot.

T.4.6 Illuminance on a desktop method

T.4.6.1 Equipment requirements

The following equipment is required. Equipment shall meet the requirements in Table CC.2.

- DC power supply.
- ~~Photometer~~ Illuminance meter.
- Lighting distribution grid testing surface.

T.4.6.2 Test prerequisites

The DUT's battery voltage and current draw corresponding to the average light output over the L_{70} run time is required. ~~Preparation of~~ The DUT shall be prepared for lighting evaluation as described in Annex G. Before measurement, the battery of the DUT shall be replaced by a

IECNORM.COM : Click to view the full PDF of IEC TS 62257-9-5:2016 RLV
Withdrawn

DC power supply. Measurements shall be taken in a conditioned space such that the air temperature is 24 °C ± 3 °C.

T.4.6.3 Apparatus

Figure T.6 shows a side view of the desktop light measuring setup. The test operator should wear all-black clothing if required to be near to the measurement surface.

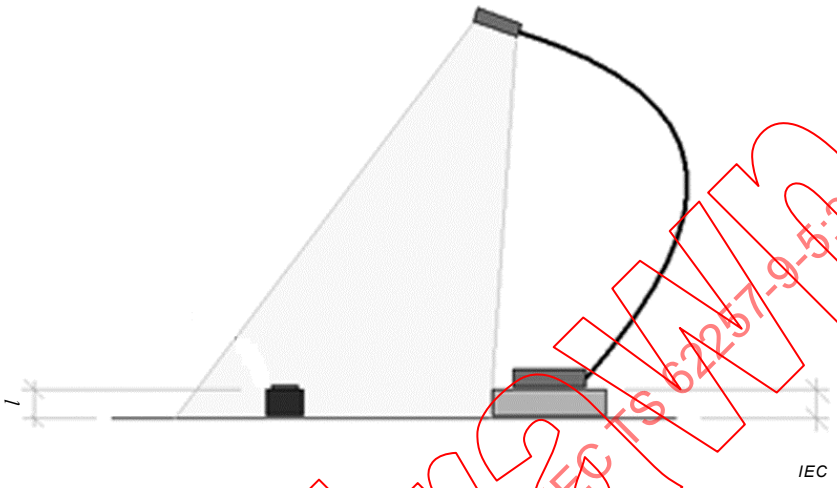

Key

l Height of ~~photometer~~ illuminance meter head and desktop light spacer

Figure T.6 –Side view of desktop light measuring setup

Testing ~~should~~ shall be done in a completely dark space, except for illumination provided by the DUT.

T.4.6.4 Procedure

The following steps shall be followed.

a) Set the voltage of the power supply such that the voltage at the product is ~~at~~ equal to the average operating voltage of the battery (Annex M)~~, and put the DUT onto its highest setting~~. Follow power supply guidelines in the power supply set up procedure (Annex H).

b) If at the desired voltage the DUT will not ~~perform in~~ operate at the desired setting, increase the power supply voltage by increments of 0,05 V until the DUT is able to ~~perform in~~ operate at the desired setting, then attempt to reduce the voltage to the desired level (Annex M).

c) Operate the DUT at least for 20 min at the desired setting before the first measurement is taken.

~~d) Illuminance is measured in the centre of each square of a desktop-specific grid surface. This grid surface has 121 measurement points.~~

~~e) Desktop lamps are placed on the surface using a spacer to compensate for errors owing to the height of the photometer head in such a way that the widest area of the surface with > 25 lux is illuminated. The desktop lamp shall be positioned to the tester's best ability to simulate how it would be used in practice.~~

d) Place the DUT on the surface using a spacer to compensate for the height of the illuminance meter head. The height of the spacer shall be equal to the height of the measurement plane of the illuminance meter (see Figure T.6). The lamp shall be oriented in the manner that it would be used by the consumer, to the best of the tester's ability, using the provided stand or mounting mechanism, if any. The lamp shall be located at the position that the tester estimates will maximize the usable area that falls on the grid (as defined in T.4.4.6 step b)).

IECNORM.COM : Click to view the full PDF of IEC TS 62257-9-5:2016 RLV
Withdrawn

e) Measure the illuminance at 121 evenly spaced points, 10 cm apart, on a 1 m × 1 m horizontal grid surface. Measure illuminance levels for the grid points that read an illuminance value greater than the resolution of the illuminance meter and greater than 0,2 % of the maximum illuminance reading.

T.4.6.5 Calculations

The calculations for the illuminance on a desktop method are identical to the calculations for the illuminance on a plane method (refer to T.4.4.6). Omit steps f) through h). (Do not calculate FWHM angles or generate polar plots.)

T.5 Reporting

Report the following in the light distribution test report ~~(a sample template is provided in Annex X)~~.

- Metadata
  - report name;
  - procedure(s) used;
  - DUT manufacturer;
  - DUT name;
  - DUT model number;
  - DUT setting;
  - test room temperature (°C);
  - name of test laboratory;
  - approving person;
  - date of report approval.
- Results for tested DUT aspects for samples 1 through n:;
  - drive current (A);
  - drive voltage at product (V);
  - waiting time (min);
  - vertical FWHM angle (°);
  - horizontal FWHM angle (°);
  - average usable area through L_{70} (m^2);
  - work surface illuminance (lux).
- Average of n sample results for each DUT aspect tested.
- Coefficient of variation of n sample results for each DUT aspect tested (%).
- Comments:
  - individual comments, as necessary, for samples 1 through n;
  - overall comments, as necessary, for collective set of samples 1 through n.
- Tables
  - table of illuminance values on the brightest "face" of the 1 m^2 grid (see Table T.3 for an example).
- Figures
  - plot of illuminated area as a function of minimum illuminance (see Figure T.7 for an example);
  - surface plots and/or polar plots (see Figure T.8 and Figure T.9 for examples).

IECNORM.COM : Click to view the full PDF of IEC TS 62257-9-5:2016 RLV
Withdrawn

Table T.3 – Table of example illuminance measurements on the brightest "face" of the 1 m² grid and usable area as a function of minimum illuminance

Illuminance measurements lx											Minimum illuminance lx	Usable area m²
13,6	17,3	21,0	24,5	26,6	27,8	26,6	22,7	19,7	16,5	13,5	10	1,21
16,9	22,1	28,0	33,5	38,5	41,1	38,1	33,2	27,7	21,5	16,6	20	1,06
20,6	27,1	35,8	44,4	52,7	54,7	51,6	43,0	34,7	26,9	20,0	30	0,69
24,1	32,4	44,3	57,4	69,3	74,3	68,4	55,9	42,5	32,0	23,3	40	0,46
26,4	36,8	52,1	66,9	82,7	88,7	81,9	66,1	49,1	35,4	25,1	50	0,34
27,4	38,2	54,5	71,1	88,1	95,0	87,0	69,5	52,1	36,9	26,2	60	0,21
27,0	36,7	51,2	66,7	81,8	87,4	80,8	64,9	49,4	34,9	24,3	70	0,12
24,0	32,2	43,4	56,5	66,7	70,5	66,2	55,4	41,6	30,0	22,0	80	0,09
20,8	26,8	35,7	43,7	49,6	52,2	50,3	41,6	32,7	25,1	18,4	90	0,01
17,3	21,9	27,6	32,6	36,9	38,1	35,9	31,4	25,6	20,2	15,4	100	0,00
13,8	17,0	20,3	23,3	25,6	26,1	25,4	22,6	18,9	15,2	12,3		

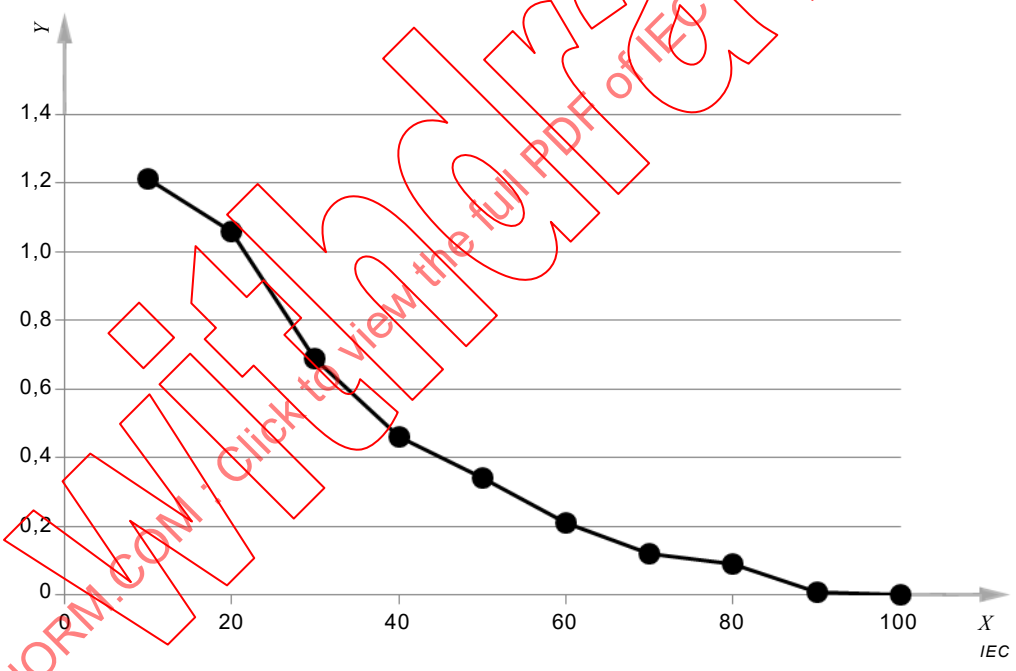

Key

X Minimum illuminance (lx)

Y Usable area (m²)

Figure T.7 – Example plot of usable area as a function of minimum illuminance

IECNORM.COM : Click to view the full PDF of IEC TS 62257-9-5:2016 RLV
Withdrawn

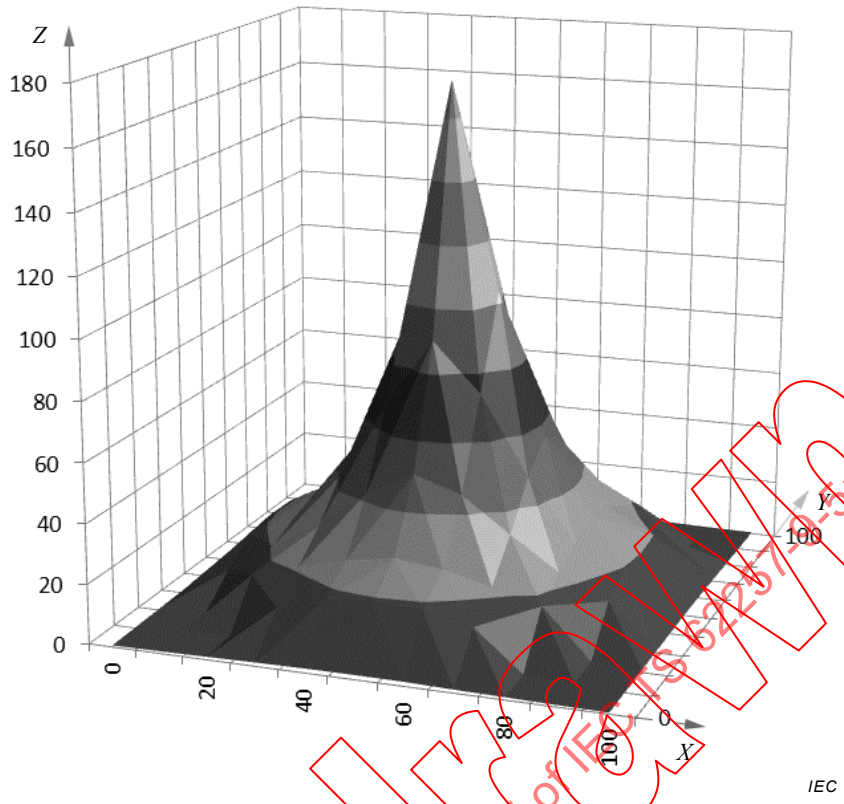

Key

X ~~Length~~ Horizontal position (cm)

Y ~~Width~~ Vertical position (cm)

Z Illuminance (lx)

Figure T.8 – Example of resulting surface plot of light distribution from the brightest "face" of the multi-plane method or illuminance on a plane method

IECNORM.COM : Click to view the full PDF of IEC TS 62257-9-5:2016 RLV
Withdrawn

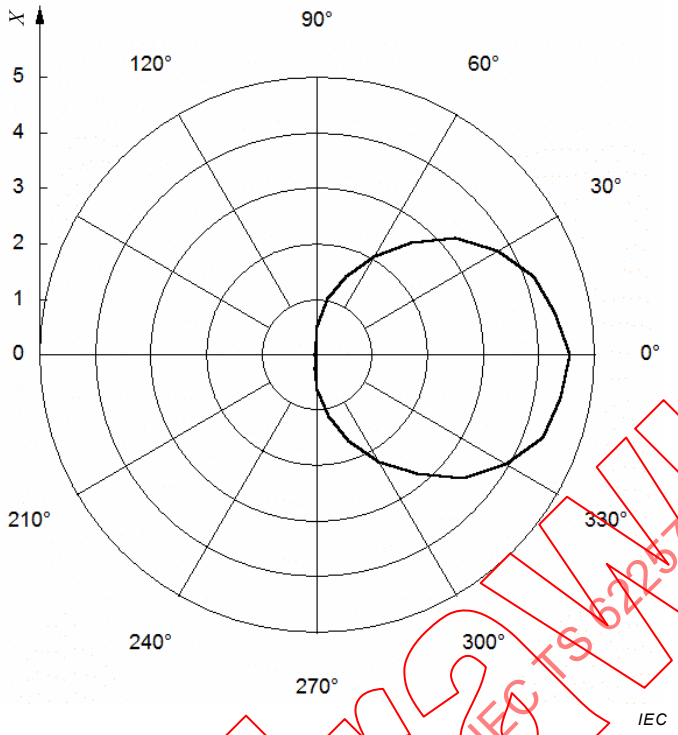

Key

X Illuminance (lx)

Figure T.9 – Example of resulting polar plot of illuminance from the multi-plane or ~~rotating disk~~ turntable method

IECNORM.COM : Click to view the full PDF of IEC TS 62257-9-5:2016 RLV
Withdrawn

Annex U
(normative)

Physical and water ingress protection test

U.1 Background

Ingress protection (IP) testing determines the degrees of protection provided by the enclosures of a DUT's ~~enclosure~~ components. The IP rating uses two numerals to define the degrees of protection. The first numeral identifies the degree the DUT has protection against solid foreign objects. The second numeral identifies the degree the DUT has protection against ingress of water with harmful effects.

This test applies to any components of the DUT that contain electronics or electrical connections, including the primary components of the DUT, the PV module, and any appliances included with the DUT. Note that the test requirements for components may be specified based on the component category (fixed outdoor, portable integrated, portable separate, fixed indoor or PV module) as described in 4.1.2. If more than one identical component or appliance is included with the DUT kit, only one of each set of identical appliances should be tested.

U.2 Test outcomes

The water exposure and physical ingress protection test outcomes are listed in Table U.1.

Table U.1 – Water exposure and physical ingress protection test outcomes *(1 of 2)*

Metric	Reporting units	Related aspects	Notes
IP2x	Pass/fail	4.2.3.5 Physical ingress protection	12,5 mm diameter probe
~~IP4~~ IP3x	Pass/fail	4.2.3.5 Physical ingress protection 4.2.3.6 Physical ingress protection – solar module	~~1~~ 2,5 mm diameter probe
IP5x	Pass/fail	4.2.3.5 Physical ingress protection 4.2.3.6 Physical ingress protection – solar module	No ingress of dust ~~Must be tested by IP-certified testing laboratory~~ Shall be tested by a laboratory that has been accredited to test according to IEC 60529. Laboratories shall use the procedure in IEC 60529; no simplified alternative is acceptable.
IPx1	Pass/fail	4.2.3.1 Water protection – enclosure 4.2.3.2 Water protection – circuit protection and drainage	Vertically dripping water

IECNORM.COM : Click to view the full PDF of IEC TS 62257-9-5:2016 RLV

Table U.1 *(2 of 2)*

IPx3	Pass/fail	4.2.3.1 Water protection – enclosure 4.2.3.2 Water protection – circuit protection and drainage	Direct sprays of water from within 60° of vertical
Modified IPx4	Pass/fail	4.2.3.4 Water protection – solar module	Splashes of water from any direction
IPx5	Pass/fail	4.2.3.1 Water protection – enclosure 4.2.3.2 Water protection – circuit protection and drainage	Water projected in jets Shall be tested by a laboratory that has been accredited to test according to IEC 60529. Laboratories shall use the procedure in IEC 60529; no simplified alternative is acceptable.

U.3 Related tests

Annex U is related to the level of water protection annex (Annex V).

U.4 Procedure

U.4.1 General

The IP class may be assessed either by sending samples of the DUT component to a laboratory that has been accredited to test according to IEC 60529 or by estimating the IP class according to the methods below, except that in the case of testing for IPx5 or IP5x, the DUT component shall be tested by a laboratory that has been accredited to test according to IEC 60529. When testing for IPx5 or IP5x, laboratories shall use the procedure in IEC 60529; no simplified alternative is acceptable.

U.4.2 IP testing at ~~an international~~ laboratory that has been accredited to test according to IEC 60529

U.4.2.1 General

Samples are sent to ~~an IP-certified test laboratory to determine the passing or failing for the desired IP requirements according to IEC 60529~~ a laboratory that has been accredited to test according to IEC 60529 to determine the passing or failing for the desired IP requirements.

U.4.2.2 Guidance on working with external IP testing laboratory

Many international IP testing laboratories will require two samples for testing. These should be samples that have not been altered in anyway.

This test is destructive. Do not perform any additional tests on the samples after testing.

For water ingress testing, specify to the ~~IP-certified test~~ laboratory that has been accredited to test according to IEC 60529 how the DUT component shall be oriented during testing. It shall be oriented in the way that the DUT component is most likely to be used.

NOTE The test used to assess solar modules for ingress of water with harmful effects is modified from the test described in IEC 60529. The modified IPx4 assessment for water ingress protection follows the same procedure to test for IPx4 as described in IEC 60529 with the exception of the angle of spray. In IEC 60529, the solar module be sprayed at angles ±180° from vertical, while in the modified method described below the solar module is sprayed at angles ±90° from vertical.

IECNORM.COM : Click to view the full PDF of IEC TS 62257-9-5:2016 RLV
Withdrawn

U.4.3 Simplified IP ~~preliminary~~ inspection for ingress of solid foreign objects

U.4.3.1 General

The DUT component is visually inspected for protection against ingress of solid foreign objects to determine the passing or failing for the desired IP requirement. This method ~~applies for~~ may be performed to estimate IP ratings IP2x and ~~IP4~~ IP3x.

U.4.3.2 Equipment requirements

The following equipment is required. Equipment shall meet the requirements in Table CC.2.

- ~~1~~ 2,5 mm diameter rigid probe or 12,5 mm diameter rigid probe.
- Camera.

U.4.3.3 Test prerequisites

This test is destructive. Do not perform any additional tests on the sample after testing. The sample tested should have not been altered in anyway.

U.4.3.4 Apparatus

No apparatus is required for this test.

U.4.3.5 Procedure

~~These steps shall be followed:~~

U.4.3.5.1 Procedure for testing DUT component enclosures

a) Before the measurement, be sure that the DUT component is properly functioning and that it is sufficiently charged to check for functionality during the test.

~~b) The DUT should be oriented in the way that it is most likely to be used.~~

~~c) If the DUT requires passing IPx1, sprinkle water from the controlled water source over the DUT so that the water drops are vertical to the DUT. The water flow rate should be close to 1 mm/min. Let the water drip over the DUT for 10 min while rotating the DUT at approximately 1 rpm about its vertical axis. The distance between the water source and DUT should be approximately 0,2 m.~~

~~d) If the DUT requires passing IPx3, spray water from the controlled water source over the DUT in all practical directions at an angle less than or equal to 60° from vertical. The water flow rate should be close to 10 l/min. Spray the water over the DUT for 1 min per square metre of enclosure surface area. The distance between the water source and the DUT should be between 0,3 m and 0,5 m.~~

b) If the DUT component requires passing IP2x, select the 12,5 mm probe. If the DUT component requires passing IP3x, select the 2,5 mm probe.

c) Explore the DUT component's entire surface to test for penetration with the selected probe.

d) If the 12,5 mm probe can enter a part of the DUT component's enclosure and touch electronic components, electrical connections or circuits, the DUT component is estimated to fail the IP2x assessment for ingress of solid foreign objects.

e) If the 2,5 mm probe can enter a part of the DUT component's enclosure that contains electronic components, electrical connections or circuits, the DUT component is estimated to fail the IP3x assessment.

f) If the probe can enter an external jack, this is not considered a failure, unless it can enter the DUT's enclosure through the external jack. Document any failures with photographs and text.

Withdrawn
IECNORM.COM : Click to view the full PDF of IEC TS 62257-9-5:2016 RLV

U.4.3.5.2 Procedure for testing a product's external solar module (if applicable)

PV modules that have been tested according to and meet all requirements of the IEC 61215 series need not be tested using this procedure. Test results provided by the manufacturer of the DUT may be accepted if the tests were performed at a laboratory accredited to perform the tests by a recognized accrediting body.

a) Before the measurement, be sure that the solar module is properly functioning and that the enclosure and/or junction box has never been opened previously.

b) To estimate IP3x, select the 2,5 mm probe.

c) Explore the solar module's entire surface to test for penetration with the selected probe.

d) If the probe can enter a part of the solar module's enclosure that contains electronic components, electrical connections or circuits, the solar module is estimated to fail the IP3x assessment for ingress of solid foreign objects. If the probe can enter an external jack, this is not considered a failure, unless it can enter the solar module's enclosure through the external jack. Document any failures with photographs and text.

NOTE Since the solar module junction box is not opened until the enclosure inspection steps below, it is not always possible to determine whether the DUT passes or fails this test until after the enclosure inspection steps are performed.

Enclosure inspection: Open the junction box or PV enclosure of the solar module to determine if a circuit board or other sensitive electronics are present. (This can be destructive.) If no circuit boards or sensitive electronics are present or if the junction box or PV enclosure is completely potted with silicone or similar sealant, the solar module is estimated to pass for protection from water ingress and the tester does not need to assess the solar module for water ingress. Simple screw terminals or a single diode, not soldered to a circuit board, need not be considered "sensitive electronic components". Any printed circuit board shall be considered "sensitive".

e) If a circuit board or other sensitive electronic components are present within the junction box or PV enclosure, the water ingress test should be conducted on a new solar module sample that has not been opened.

U.4.3.6 Calculations

No calculations are made for the ingress of solid foreign objects IP test performed through visual inspection.

U.4.4 Simplified IP preliminary inspection for ingress of water with harmful effects

U.4.4.1 General

The DUT component is visually inspected for protection against ingress of water with harmful effects to determine if it is likely to pass or fail with respect to the desired IP requirement. This method may be performed ~~for~~ to estimate IP ratings IPx1, IPx3 and a modified IPx4.

NOTE The test used to assess solar modules for ingress of water with harmful effects is modified from the test described in IEC 60529. The modified IPx4 assessment for water ingress protection follows the same procedure to test for IPx4 as described in IEC 60529 with the exception of the angle of spray. In IEC 60529, the DUT be sprayed at angles ±180° from vertical, while in the modified method described below the DUT is sprayed at angles ±90° from vertical.

U.4.4.2 Equipment requirements

The following equipment is required. Equipment shall meet the requirements in Table CC.2.

- Controlled water source.
- Camera.

IECNORM.COM : Click to view the full PDF of IEC TS 62257-9-5:2016 RLV
Withdrawn

U.4.4.3 Test prerequisites

This test is destructive. Do not perform any additional tests on the sample after testing. The sample tested should have not been altered in anyway.

U.4.4.4 Apparatus

No apparatus is required for this test.

U.4.4.5 Procedure

~~These steps shall be followed:~~

U.4.4.5.1 Procedure for testing DUT component enclosures

a) Before the measurement, be sure that the DUT component is properly functioning and that it is sufficiently charged to check for functionality during the test.

b) The DUT component should be oriented in the way that it is most likely to be used. Reference the product's packaging, user's manual, and/or website to determine the orientation in which the DUT component is most likely to be used. Record the selected orientation.

c) If the DUT component requires passing IPx1, sprinkle water from the controlled water source over the DUT component so that the water drops are vertical to the DUT component. The water flow rate should be close to 1 mm/min. Let the water drip over the DUT component for 10 min while rotating the DUT component at approximately 1 rpm about its vertical axis. The distance between the water source and DUT component should be approximately 0,2 m.

d) If the DUT component requires passing IPx3, spray water from the controlled water source over the DUT component in all practical directions at an angle less than or equal to 60° from vertical. The water flow rate should be close to 10 l/min. Spray the water over the DUT component for approximately 1 min per square metre of enclosure surface area for a minimum of 5 min. The distance between the water source and the DUT should be between 0,3 m and 0,5 m.

e) After sprinkling or spraying water over the DUT component, dry the enclosure's exterior with a towel without moving the DUT component from its orientation during testing.

f) Enclosure inspection: While keeping the product in the same orientation from testing, open the enclosure with the proper screwdriver(s) or other devices.

g) If any water is found ~~on~~ within any compartment holding electronic components inside the enclosure, the DUT component does not pass the required IP class for ingress of water with harmful effects. Document with photographs and text.

U.4.4.5.2 Procedure for testing a product's external solar module (if applicable)

PV modules that have been tested according to and meet all requirements of IEC 61215 (all parts), whichever part is applicable, need not be tested using this procedure. Test results provided by the manufacturer of the DUT may be accepted if the tests were performed at a laboratory accredited to perform the tests by a recognized accrediting body.

a) Be sure that before the measurement, the junction box of another sample's external solar module has already been opened to determine if a circuit board or other sensitive electronics are present. (This can be destructive.) If no circuit boards or sensitive electronics are present or if the junction box is completely potted with silicone or similar sealant, the solar module passes for protection from water ingress with harmful effects and the tester does not need to assess the solar module for water ingress.

b) Before the measurement, be sure that the solar module is properly functioning and that the enclosure and/or junction box has never been opened previously.

c) Place the solar module with the active PV area facing up on a smooth, solid, flat surface that is tilted at a 10° angle from the horizontal (Figure U.1). The DUT should be placed in the least favourable orientation on the surface. The placement is intended to resemble

IECNORM.COM : Click to view the full PDF of IEC TS 62257-9-5:2016 RLV
Withdrawn

common rooftop installations and allow for the possibility that water would run behind the module. This will typically be accomplished by allowing the PV cord to rest under the frame as could occur when installed.

NOTE 1 The least favourable orientation is typically the one in which the cable exits the junction box on the upslope side.

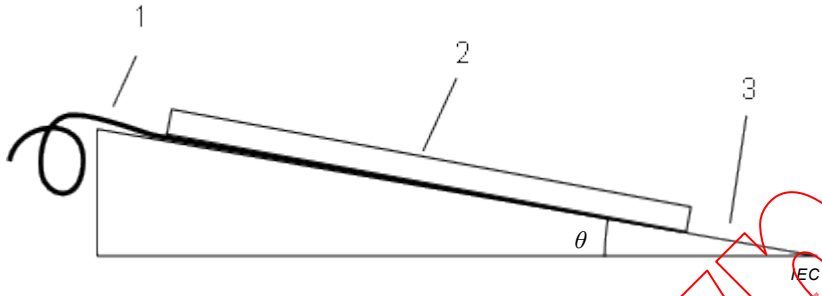

Key

1 Solar module cable
2 Solar module
3 Flat surface
θ 10° incline

Figure U.1 – Side view of the apparatus for testing a DUT's external solar module for protection against water ingress

d) Spray water from the controlled water source over the solar module in all practical directions (at angles up to 90° from vertical). The water flow rate should be close to 10 l/min. Spray the water over the solar module for approximately 1 min per square metre of enclosure surface area for a minimum of 5 min. The distance between the water source and the solar module should be between 0,3 m and 0,5 m.

e) After spraying water over the solar module, dry the solar module's exterior on all sides with a towel without tilting the solar module.

f) Open the junction box or the solar module's enclosure protecting its electronic components with the proper screwdriver(s) or other devices. (This can be destructive.)

NOTE 2 Some external solar modules do not have a typical junction box, but rather its connections are within an enclosure around the module itself.

g) After opening the solar module's junction box or enclosure, note if there are any unsealed penetrations around the solar module's frame through which water reaches the active material of the solar module.

h) If no water is found inside the junction box, enclosures or any unsealed penetrations, the DUT's solar module is estimated to pass for modified IPx4 protection from water ingress with harmful effects.

i) If any water is found on electronic components inside the junction box, enclosures or any unsealed penetrations, document with photographs and text. For the DUT to pass, electronic components and the active material of the PV module shall be adequately protected according to the technical aspects outlined in Annex V. Adequate protection is evaluated by an organization with expertise in product design, failure analysis, energy systems, and general engineering practices. This requirement cannot be met through labelling or consumer-facing documentation.

U.4.4.6 Calculations

No calculations are made for the ingress of water with harmful effects IP test performed through visual inspection.

IECNORM.COM : Click to view the full PDF of IEC TS 62257-9-5:2016 RLV
Withdrawn

U.5 Reporting

Report the following in the water exposure and physical ingress protection test report ~~(a sample template is provided in Annex X)~~.

- Metadata:
  - report name;
  - procedure(s) used;
  - DUT manufacturer;
  - DUT name;
  - DUT model number;
  - name of test laboratory;
  - approving person;
  - date of report approval;
  - component name.
- Results for tested DUT aspects for samples 1 through n:
  - IP rating for the ingress of solid foreign objects;
  - IP rating for the ingress of water with harmful effects;
  - pass/fail for the IP rating for the ingress of solid foreign objects, if applicable;
  - pass/fail for the IP rating for the ingress of water with harmful effects, if applicable.
- Comments:
  - individual comments, as necessary, for samples 1 through n;
  - overall comments, as necessary, for collective set of samples 1 through n.
- Figures:
  - photographs to evidence the ingress of solid foreign objects or water, as necessary.

IECNORM.COM : Click to view the full PDF of IEC TS 62257-9-5:2016 RLV
Withdrawn

Annex V
(normative)

Level of water protection

V.1 Background

The enclosure of a solar lighting product can prevent water and solid foreign particles from coming in contact with internal electronic circuits, components, wires, and battery components (electronic components). The degree of protection provided by the enclosure is determined through ingress protection (IP) as outlined in Annex U. IP testing does not, however, assess the actual or potential damage caused to electronic components by water exposure.

Alternate means of protection exist for electronic components exposed to water. These alternate means ~~may~~ can allow manufactures to reduce the cost of their product(s) to the consumer, thereby increasing consumer access to modern lighting technology. Annex V outlines procedures for assessing overall water exposure protection based on IP test results combined with alternate protection means.

Annex V does not attempt to characterize the damage caused by water exposure to sensitive electronic components. Rather, Annex V provides a framework to assess the likelihood, during the service life of a product, that unprotected internal electronic components will be exposed to water that could negatively affect product operation.

V.2 Test outcomes

The procedures in Annex V may be used to establish a DUT's water exposure protection level. The four levels are:

a) No protection – The product has no water protection and ~~may~~ could be damaged by any water exposure.

b) Occasional rain – The product ~~may~~ can be exposed to occasional light rain without damage.

c) Frequent rain – The product ~~may~~ can be exposed to frequent rain without damage.

d) Permanent rooftop installation for PV modules – when installed on a roof, the product's solar module can be exposed to frequent heavy rain without damage.

e) Permanent outdoor exposure – The product ~~may~~ can be exposed to frequent heavy rain without damage.

The water exposure and physical ingress protection test outcomes are listed in Table V.1.

IECNORM.COM : Click to view the full PDF of IEC TS 62257-9-5:2016 RLV
Withdrawn

Table V.1 – Water exposure and physical ingress protection test outcomes

Metric	Reporting units	Related aspects	Notes
Overall level of water protection	Qualitative (from list above)	~~4.2.11 Water protection integrated assessment~~ 4.2.3.1 Water protection – enclosure 4.2.3.2 Water protection – circuit protection and drainage 4.2.11.1 Product and manufacturer information 4.2.2.7 Packaging and user's manual information	This is the level of water protection that is achieved when considering user instructions and labels in addition to the technical elements of the product.
Technical level of water protection	Qualitative (from list above)	~~4.2.11 Water protection integrated assessment~~ 4.2.3.1 Water protection – enclosure 4.2.3.2 Water protection – circuit protection and drainage 4.2.3.4 Water protection – solar module 4.2.11.1 Product and manufacturer information	This is the level of water protection provided by only the technical elements of the product – the enclosure, circuits, and other physical aspects.
Enclosure-only level of water protection	Qualitative (from list above)	~~4.2.11 Water protection integrated assessment~~ 4.2.3.1 Water protection – enclosure 4.2.3.4 Water protection – solar module	This only refers to the IP rating of the enclosure.

V.3 Related tests

Annex V is related to the water exposure and physical ingress protection test (Annex U) and visual screening (Annex F).

V.4 Laboratory requirements

The assessments in Annex V are typically done by an organization with broad experience in the off-grid lighting sector, including technical and field experience.

Assessments regarding the technical level of water protection should be completed by an organization with expertise in product design, failure analysis, energy systems, and general engineering practices.

Assessments of the overall level of water protection (incorporating consumer labelling information) should be completed by a committee with expertise in communication and end user behaviour in the off-grid lighting market.

V.5 Procedure

V.5.1 General

The following procedures establish a product's level of water protection. All of the procedures in Annex V require an IP test result as specified in Annex U. Additional factors, such as

IECNORM.COM : Click to view the full PDF of IEC TS 62257-9-5:2016 RLV
Withdrawn

product labelling or specific product design features, may also be considered when determining the level of water protection.

V.5.2 Level of water protection for enclosure only

This procedure uses a product's IP rating, and only its IP rating, to determine the level of water protection. No other tests are required. The level of water protection by IP rating is determined according to Table V.2.

Table V.2 – Enclosure-only level of water protection requirements

Enclosure level of water protection	IP rating requirement
No protection	IPx0
Occasional rain	IPx1
Frequent rain	IPx3
Permanent rooftop installation for PV modules	Modified IPx4
Permanent outdoor exposure	IPx5
NOTE The modified IPx4 assessment for water ingress protection follows the same procedure to test for IPx4 as described in IEC 60529 with the exception of the angle of spray. IEC 60529 requires that the DUT be sprayed at angles ±180° from vertical, while the modified method described below requires that the DUT be sprayed at angles ±90° from vertical.	

V.5.3 Level of water protection from technical aspects

V.5.3.1 General

This procedure describes an assessment of the technical aspects of a product to establish the level of water protection that is achieved by a product from an engineering design standpoint. The aspects included in this holistic assessment are:

- the enclosure,
- circuit design and protection,
- internal draining,
- manufacturing processes, and
- other innovative approaches.

The overall product design shall be assessed on a case-by-case basis to determine the technical level of water protection. The assessment includes information from lab tests, field experience, and statements supplied by the manufacturer.

Products may be considered to have a technical level of water protection according to Table V.3.

IECNORM.COM : Click to view the full PDF of IEC TS 62257-9-5:2016 RLV
Withdrawn

Table V.3 – Technical level of water protection requirements

Technical level of water protection	Requirement
No protection	N/A
Occasional rain	Assessment indicates the enclosure and other technical aspects will protect from occasional rain, equivalent to IPx1 protection.
Frequent rain	Assessment indicates the enclosure and other technical aspects will protect from frequent rain, equivalent to IPx3 protection.
Permanent rooftop installation for PV modules	Assessment indicates the enclosure and other technical aspects will protect from permanent outdoor exposure in the context of a rooftop installation, equivalent to a modified IPx4 protection.
Permanent outdoor exposure	Assessment indicates the enclosure and other technical aspects will protect from permanent outdoor exposure, typically requiring an enclosure with at least IPx3 protection and additional circuit protection.

V.5.3.2 Gathering product design information from lab testing

Results and observations from the following tests are relevant for this assessment:

- Annex U (physical and water ingress protection test);
- Annex F (visual screening).

V.5.3.3 Gathering field and experiential information

Information from field trials and using samples of the product in a variety of environmental conditions may supplement other information and provide unique, targeted insights.

V.5.3.4 Gathering product design information from the manufacturer

V.5.3.4.1 General

The manufacturer is responsible for providing information about product design and manufacturing that is part of a water protection strategy.

Ask the manufacturer to provide product design data and explanations justifying a technical level of water protection. This data should include the following.

a) Written descriptions of the product design elements and materials that will protect the circuit components from water exposure damage.
b) Photographs or video clips showing the relevant design features.
c) Specification sheets for materials used for protection.
d) Written descriptions of protection for each circuit component in V.5.3.4.2.
e) Written descriptions of relevant manufacturing processes employed for circuit component protection.
f) Written descriptions of quality control processes relevant to circuit component protection.
g) Descriptions of tests performed by the manufacturer to demonstrate protection of circuit components from damage caused by water exposure.

V.5.3.4.2 Circuit design information

The relevant circuit components to provide information about include:

IECNORM.COM : Click to view the full PDF of IEC TS 62257-9-5:2016 RLV
Withdrawn

a) printed circuit boards,
b) component solder joints,
c) wire to board solder joints,
d) wire to board connectors,
e) wire to battery terminal solder joints,
f) wire to battery terminal connectors,
g) LED components, and
h) switch components.

V.5.3.4.3 Manufacturing quality control information

The manufacturer should describe quality control processes that are in place to ensure consistent application of coatings, use of gaskets, etc.

V.5.3.4.4 Water resistant coatings

Polymer coatings on printed circuit boards, wire solder joints, connectors, and electronic components have been shown to reduce or eliminate the negative effects of water exposure to live electronic circuit elements. In order to be effective, these coatings shall be properly applied to clean substrates in a quality controlled manufacturing process.

V.5.3.4.5 Novel design approaches

Other means ~~may be~~ are available to protect electronic components from water exposure damage. For example, the product ~~may~~ could be designed to allow water to drain from the case and not collect on circuit components. These novel approaches shall be outlined and explained by the manufacturer with supporting documentation justifying a level of water protection as outlined in Table V.3.

V.5.3.5 Assessment of technical level of water protection

The final assessment of the technical level of water protection should include information from each of the sources listed above.

The assessment details should include an evaluation of protection for critical components on a piece by piece basis. Reference should be provided where appropriate to the manufacturer supplied data. See Table V.4 for an example product where the manufacturer is using conformal coatings and silicone sealants to protect internal circuit components:

IECNORM.COM : Click to view the full PDF of IEC TS 62257-9-5:2016 RLV
Withdrawn

Table V.4 – Example detailed assessment supporting technical level of water protection

Circuit component	Method of protection	Manufacturer reference material	Notes
Printed circuit boards	Conformal coating	Pcb_coating1.jpg	
Component solder joints	Conformal coating	Pcb_coating2.jpg	
Wire to board solder joints	None		Wire to board solder joints are not sealed or encapsulated
Wire to board connectors	N/A		None used
Wire to wire connectors	N/A		None used
Wire to battery terminal solder joints	Silicone encapsulant	Battery_coating1.jpg	
Wire to battery terminal connectors	N/A		None used
LED components	Case design	LED_lens1.jpg	Manufacturer statement
Switch components	None		Switch is not sealed

V.5.4 Overall level of water protection

V.5.4.1 General

The overall level of water protection assessment accounts for consumer labelling and instructions in combination with either the technical or enclosure-only level of water protection.

If appropriate consumer information is provided, the level of water protection is increased relative to the technical or enclosure-only findings.

This assessment cannot result in an increase to the permanent outdoor exposure level, since products that are permanently mounted outdoors are not protected from water by the end user.

Table V.5 lists the requirements for assessing the overall level of water protection.

Table V.5 – Overall level of water protection requirements

Technical level of water protection or Enclosure-only level of water protection	Overall level of water protection without consumer labelling	Overall level of water protection with consumer labelling
No protection	Same	Occasional rain
Occasional rain	Same	Frequent rain
Frequent rain	Same	Same
Permanent rooftop installation for PV modules	Same	Same
Permanent outdoor exposure	Same	Same

V.5.4.2 Assessing consumer labels and information

V.5.4.2.1 General

Subclause V.5.4.2 describes a framework for assessing consumer labels and instructions for appropriateness.

The overall requirement for consumer labels and instructions is that the communication strategy should be designed and implemented so that a typical user understands both the degree of protection from water for the product and what they should do to maintain the product in an instance of water exposure.

IECNORM.COM : Click to view the full PDF of IEC TS 62257-9-5:2016 RLV

The factors to consider are:

- language and literacy of expected end users,
- prominence of information, and
- clarity of presentation.

V.5.4.2.2 Gathering information on water protection messages

Information from visual screening (Annex F) and additional inspection of the packaging should be used to establish the messages to buyers and end users concerning water protection.

Potential locations (not inclusive) of information:

- Labels and pictograms on packaging.
- Instructions in the users manual.
- Information on the warranty card.
- Advertising and media.

V.6 Reporting

Report the following in the Equivalent IP water exposure protection report.

- Metadata:
  - name of test;
  - procedures used to qualify for level of water protection (IP rating, labelling and/or product design);
  - DUT manufacturer;
  - DUT name;
  - DUT model number;
  - name of test laboratory;
  - approving person;
  - date of report approval.
- Main findings:
  - overall level of water protection;
  - technical level of water protection;
  - enclosure-only level of water protection.
- Supporting information:
  - IP rating for enclosure;
  - description of other technical approaches (if applicable);
  - suitability of consumer labelling for communicating level of technical water protection and steps to protect the product.
- Manufacturer supplied data (Include all manufacturer supplied data in the test report).
- Assessment of manufacturer supplied data ~~(include a table similar to Table V.4)~~.
- Comments:
  - individual comments, as necessary, on the specific material provided by the manufacturer demonstrating an equivalent IP level protection;
  - overall comments, as necessary, for the collective set of materials provided by the manufacturer demonstrating an equivalent level of IP protection.

IECNORM.COM : Click to view the full PDF of IEC TS 62257-9-5:2016 RLV
Withdrawn

Annex W
(normative)

Mechanical durability test

W.1 Background

The mechanical durability test captures a DUT's robustness in withstanding the rigors of expected daily usage. The mechanical durability test includes the drop test, the switch and connector test, the gooseneck and moving part test (if applicable), and the strain relief test (if applicable).

During the drop test, the DUT is dropped from a height of 1 m onto a concrete surface. Six drops occur per DUT sample, with each drop impacting a different side of the sample. During the switch and connector test, each switch and/or connector of the DUT sample is cycled 1 000 times. The gooseneck and moving part test is only conducted on DUT samples with goosenecks/moving parts, and it requires the gooseneck/moving part of the DUT sample to be bent 1 000 times through its feasible range of usage. The strain relief test involves attaching a 2 kg weight onto any permanently connected cable ends (i.e. cable ends without connectors) for 60 s at three different strain angles. Throughout all four tests, the DUT sample is examined for functionality, damage, and the presence of user safety hazards.

W.2 Test outcomes

The test outcomes of the mechanical durability test are listed in Table W.1.

Table W.1 – Mechanical durability test outcomes *(1 of 2)*

Metric	Reporting units	Related aspects	Notes
Drop test sample functionality	Yes/no	4.2.3.7 Drop resistance	--
Drop test user safety hazard(s) present	Yes/no, description	4.2.3.7 Drop resistance	--
Drop test sample damage	Yes/no, description	4.2.3.7 Drop resistance	--
Switch and connector test cycles achieved	Cycles	4.2.3.9 Connector durability 4.2.3.10 Switch durability	--
Switch and connector test sample functionality	Yes/no	4.2.3.9 Connector durability 4.2.3.10 Switch durability	--
Switch and connector test user safety hazard(s) present	Yes/no, description	4.2.3.9 Connector durability 4.2.3.10 Switch durability	--
Switch and connector test sample damage	Yes/no, description	4.2.3.9 Connector durability 4.2.3.10 Switch durability	--
Gooseneck/moving part test cycles achieved	Cycles	4.2.3.8 Gooseneck and moving part durability	
Gooseneck/moving part test sample functionality	Yes/no	4.2.3.8 Gooseneck and moving part durability	--
Gooseneck/moving part test user safety hazard(s) present	Yes/no, description	4.2.3.8 Gooseneck and moving part durability	--
Gooseneck/moving part test sample damage	Yes/no, description	4.2.3.8 Gooseneck and moving part durability	--

IECNORM.COM : Click to view the full PDF of IEC TS 62257-9-5:2016 RLV
Withdrawn

Table W.1 *(2 of 2)*

Strain relief time achieved for each weight and strain angle	Seconds (s)	4.2.3.11 Strain relief durability	--
Strain relief test sample functionality	Yes/no	4.2.3.11 Strain relief durability	--
Strain relief test user safety hazard(s) present	Yes/no, description	4.2.3.11 Strain relief durability	--
Strain relief test sample damage	Yes/no, description	4.2.3.11 Strain relief durability	--

W.3 Related tests

Annex W is not related to any of the other annexes.

W.4 Procedures

W.4.1 Drop test

W.4.1.1 General

The DUT sample is dropped on six different sides from a height of 1 m onto a level concrete surface and examined for functionality, user safety hazards, and damage.

W.4.1.2 Equipment requirements

The ~~following equipment~~ camera is required.

- ~~Tape measure or ruler at least 1 m in length~~
- ~~Camera~~

W.4.1.3 Test prerequisites

At the start of the drop test, the DUT samples shall be minimally altered (ideally unaltered), fully functional, and have sufficient charge to check for functionality throughout the test.

If the DUT samples have multiple units or components, determine an appropriate order to test the parts that need to undergo the drop test. DUT samples or sample parts that are intended to be stationary (e.g. separate control boxes, lamp units intended to be mounted) and PV modules do not need to be drop-tested. Portable DUT samples or sample parts (e.g. torches, lanterns, desktop lamps) shall be drop tested.

This test is destructive. Do not carry out additional tests with the tested samples.

W.4.1.4 Apparatus

Choose an appropriate location to perform the drop test. The location should have a smooth, level concrete surface with ample space to avoid personal injury from a DUT projectile (e.g. glass and/or plastic shards). A height of 1 m shall be established from the ground to begin the drop.

W.4.1.5 Procedure

The following steps shall be followed.

a) Drop the DUT sample six times from a height of 1 m – once on each of the six "faces" of the product, taking care to drop the DUT sample on parts deemed mechanically weak (e.g. handles, loose parts). Using the three-dimensional system shown in Figure W.1, the DUT should be rotated after each drop as follows: The DUT sample is rotated by 90° along the

IECNORM.COM : Click to view the full PDF of IEC TS 62257-9-5:2016 RLV
Withdrawn

x-axis following each of the first three drops, rotated by 90° along the y-axis from its initial drop orientation for the fifth drop, and rotated 180° along the y-axis from its fifth drop orientation for the sixth drop.

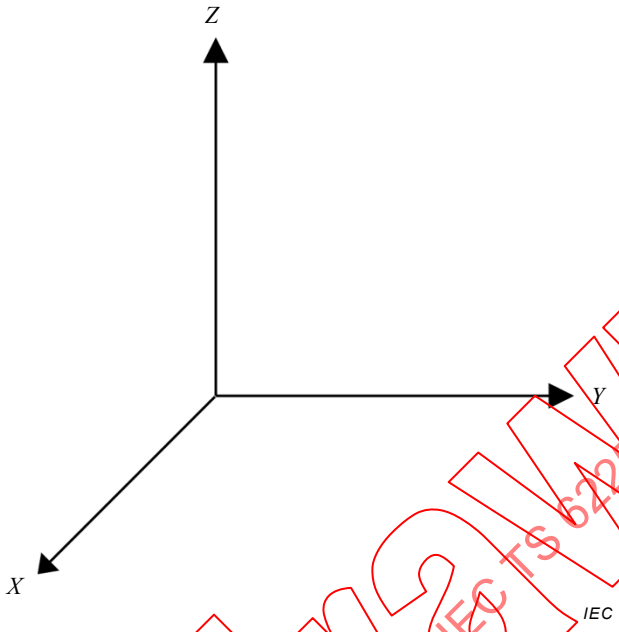

Figure W.1 – Three-dimensional Cartesian coordinate system for drop test reference

b) After each of the six drops, examine the DUT sample for functionality, the presence of user safety hazards (e.g. glass shards, short circuits), and damage and record the observations with descriptions and photographs. Superficial damage (minor scrapes or "popped off" components that can easily be put back in place) shall not be noted; only note damage that is permanent and non-superficial.

W.4.1.6 Calculations

No calculations are made for the drop test.

W.4.2 Switch and connector test

W.4.2.1 General

Each DUT sample switch and/or connector is cycled 1 000 times and examined for functionality, user safety hazards, and damage.

W.4.2.2 Equipment requirements

A camera is required.

W.4.2.3 Test prerequisites

At the start of the switch and connector test, the DUT samples shall be fully functional and have sufficient charge to check for functionality throughout the test.

This test is destructive. Do not carry out additional tests with the tested samples, with the exception of the switch and connector test, the strain relief test, and the drop test (if the DUT samples are still functional after the switch and connector test).

W.4.2.4 Apparatus

No apparatus is required for the switch and connector test.

IECNORM.COM : Click to view the full PDF of IEC TS 62257-9-5:2016 RLV
Withdrawn

W.4.2.5 Procedure

The following steps shall be followed.

a) Cycle each of the DUT sample's unique switch(es) and/or connector(s) 1 000 times. This test can be done manually or by using a mechanical device. A unique switch or connector is one that is not identical to any other switch or connector of the DUT. If the DUT has two or more identical switches or connectors, only one of those identical switches is considered unique and shall be cycled. A cycle consists of a complete function of the switch or connector's performance (e.g. a push button completes one cycle of its function each time it is pushed and released regardless of whether the DUT changes light output settings over different cycles. A rocker switch completes one cycle of its function after it is rocked through all options, possibly toggling the DUT's light output through multiple settings).

b) If the DUT has at least two identical switches or connectors and more than one DUT is being tested (e.g. six DUTs are tested using the QTM), the selection of the unique switch or connector to be tested within the set of identical switches or connectors on any single DUT shall rotate between the identical switches or connectors (e.g. if a product has six identical barrel plug sockets and the product is undergoing QTM testing, each DUT should have a different barrel plug socket tested).

c) If damage is observed during the testing, record the observations with descriptions and photographs. Superficial damage (minor scrapes or "popped off" components that can easily be put back in place) shall not be noted; only note damage that is permanent and non-superficial.

d) Continue testing until the product fails to function, a user safety hazard develops (e.g. short circuit), or 1 000 cycles are achieved. If potential damage cannot instantly be observed during testing (e.g. damage to a PV module or mobile phone connector), check for DUT sample functionality after every 100 cycles.

W.4.2.6 Calculations

No calculations are made for the switch and connector test.

W.4.3 Gooseneck and moving part test

W.4.3.1 General

If applicable, each DUT sample's gooseneck/moving part is bent 1 000 times through its feasible range of usage.

W.4.3.2 Equipment requirements

A camera is required.

W.4.3.3 Test prerequisites

At the start of the gooseneck and moving part test, the DUT samples shall be fully functional and have sufficient charge to check for functionality throughout the test.

This test is destructive. Do not carry out additional tests with the tested samples, with the exception of other destructive tests (if the DUT samples are still functional after the gooseneck and moving part test).

W.4.3.4 Apparatus

No apparatus is required for the gooseneck and moving part test.

W.4.3.5 Procedure

The steps shall be followed.

IECNORM.COM : Click to view the full PDF of IEC TS 62257-9-5:2016 RLV
Withdrawn

a) Bend the DUT sample's gooseneck/moving part 1 000 times through its feasible range of usage (this can be done manually or by using a mechanical device).

b) If damage is observed during the testing, record the observations with descriptions and photographs. Superficial damage (minor scrapes or "popped off" components that can easily be put back in place) shall not be noted; only note damage that is permanent and non-superficial.

c) Continue testing until the product fails to function, a user safety hazard develops (e.g. short circuit), or 1 000 bends are achieved.

W.4.3.6 Calculations

No calculations are made for the gooseneck and moving part test.

W.4.4 Strain relief test

W.4.4.1 General

If applicable, each DUT samples' permanent cable ends (i.e. cable ends without connectors) are subjected to a 2 kg weight for 60 s at various strain angles.

W.4.4.2 Equipment requirements

The following equipment is required. Equipment shall meet the requirements in Table CC.2.

- Camera.
- Clamp or other means of holding DUT components in place.
- Calibrated 2 kg weight.
- Protractor or other means of determining the strain angle.
- Stopwatch.

W.4.4.3 Test prerequisites

At the start of the strain relief test the DUT samples and their PV modules should be fully functional and the DUTs should have sufficient charge to check for functionality throughout the test.

This test is destructive. Do not carry out additional tests with the tested samples, with the exception of the switch and connector test, the drop test, and the gooseneck and moving part test (if the DUT samples and PV modules are still functional after the strain relief test).

W.4.4.4 Apparatus

A clamp or other means of securely holding a 2 kg weight and the DUT and/or the DUT's PV module in place is required.

W.4.4.5 Procedure

The following steps shall be followed.

a) Determine which DUT cable ends are permanently attached (i.e., do not have a connector end) to the DUT and/or PV module.

b) Clamp the DUT, DUT component, or PV module in place and attach the 2 kg weight to the cable so that the strain angle (γ) is 0° relative to the direction from which the cable protrudes from the DUT, DUT component, or PV module (see Figure W.2).

IECNORM.COM : Click to view the full PDF of IEC TS 62257-9-5:2016 RLV
Withdrawn

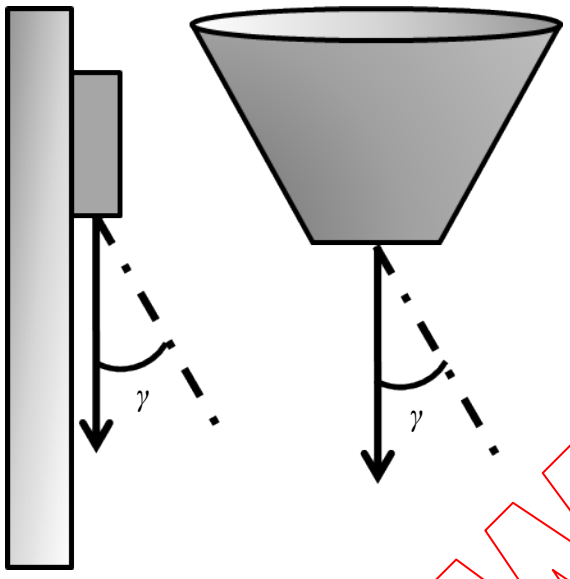

Key

γ Cable strain angle (°)

Figure W.2 – Cable strain angle (γ) schematics for a PV module junction box (left) and a separate light point (right)

c) Observe the DUT, DUT component, or PV module for 60 s. After 60 s, record the DUT's, DUT component's, or PV module's functionality, any physical damage, and the presence of safety hazards. Superficial damage (minor scrapes or "popped off" components that can easily be put back in place) should not be noted; only note damage that is permanent and non-superficial.

d) Repeat steps b) and c) for strain angles of 45° and 90°.

e) Repeat step b) through step d) for each permanently-attached cable end found in step a).

W.4.4.6 Calculations

No calculations are made for the strain relief test.

W.5 Reporting

Report the following in the mechanical durability test report ~~(a sample template is provided in Annex X)~~.

- Metadata:
  - report name;
  - procedure(s) used;
  - DUT manufacturer;
  - DUT name;
  - DUT model number;
  - name of test laboratory;
  - approving person;
  - date of report approval.
- Results for tested DUT aspects for samples 1 through n:
  - drop tests:
    a) functions after each drop (pass/fail);

IECNORM.COM : Click to view the full PDF of IEC TS 62257-9-5:2016 RLV
Withdrawn

b) no damage present after each drop (pass/fail);
c) no user safety hazard present after each drop (pass/fail).

– switch/connector tests:
a) cycles achieved for each switch and/or connector;
b) functions after test (pass/fail);
c) no damage present after test (pass/fail);
d) no user safety hazard present after test (pass/fail).

– gooseneck and moving part test:
a) cycles achieved for the gooseneck/moving part;
b) functions after test (pass/fail);
c) no damage present after test (pass/fail);
d) no user safety hazard present after test (pass/fail).

– strain relief test:
a) time achieved for each strain angle (s);
b) functions after test (pass/fail);
c) no damage present after test (pass/fail);
d) no user safety hazard present after test (pass/fail).

- Comments:
  – individual comments, as necessary, for samples 1 through n for each test;
  – overall comments, as necessary, for collective set of samples 1 through n for each test.
- Figures:
  – photographs of observed user safety hazards and/or DUT sample damage.

Withdrawn
IECNORM.COM : Click to view the full PDF of IEC TS 62257-9-5:2016 RLV

Annex X
(informative)

Example test report templates

X.1 Background

All of the tests conducted on the lighting product samples have information, specifications, and/or results to report. Annex X provides example test report templates for organizing the outcomes of the tests in a consistent manner.

These templates contain fields for all pertinent outcomes of each test or procedure, and in some cases not every field will be completed. Furthermore, the size of the template fields will likely need to be increased to incorporate certain test outcomes and comments.

X.2 Test report templates

X.2.1 Manufacturer self-reported information

Table X.1 may be used to report the manufacturer self-reported information (Annex D).

Withdrawn
IECNORM.COM : Click to view the full PDF of IEC TS 62257-9-5:2016 RLV

Table X.1 – Manufacturer self-reported information test report template *(1 of 2)*

Report name	Manufacturer self-reported information
Manufacturer	-
Product name	-
Model number	-
Test lab	-
Approving person	-
Approval date	
	Confidential information
Manufacturer company physical address	
Contact person	
Contact person position at company	
Contact telephone number	
Contact fax number	
Contact e-mail	
Product markets	
Product FOB price ($)	
Typical shipping point of origin	
Product driver type (if known)	
Product battery charge control methods (if applicable)	
Description of battery charge control methods (if applicable)	
Is the battery certified according to IEC 62133 procedures? (yes/no)	

Withdrawn
IECNORM.COM : Click to view the full PDF of IEC TS 62257-9-5:2016 RLV

Table X.1 *(2 of 2)*

	Public information
Manufacturer company name	
Manufacturer company physical address	
Contact person name	
Contact person position at company	
Contact telephone number	
Contact fax number	
Contact e-mail	
Manufacturer company website	
Product name	
Product model number	
Product lighting technologies	
Product battery chemistry	
Product battery package type	
Product battery nominal voltage (V)	
Product battery capacity (mAh)	
Product charging systems	
Included product features	
Optional product features	
Description of product warranty terms	
Manufacturer company certifications	
Product certifications	

X.2.2 Product sampling information

Table X.2 may be used to report the product sampling information (Annex E).

IECNORM.COM : Click to view the full PDF of IEC TS 62257-9-5:2016 RLV
Withdrawn

Table X.2 – Product sampling information test report template

Report name	Product sampling
Procedure(s)	-
Manufacturer	-
Product name	-
Model number	-
Test lab	-
Approving person	-
Approval date	
Sampling instructions	
Name of sampling agency	
Name(s) of sampling agent(s)	
Sampling location(s)	
Number of samples procured (at each location)	
Name of shipping agency	
Shipment tracking number	
Date samples are shipped to test lab	
Date samples are received at test lab	

X.2.3 Visual Screening results

Table X.3 may be used to report the visual screening results (Annex F).

Table X.3 – Visual screening results test report template *(1 of 7)*

Report name	Visual screening
Procedure(s)	
Manufacturer	
Product name	
Model number	
Test lab	
Approving person	-
Approval date	
Manufacturer contact information	
Retail box description	

IECNORM.COM : Click to view the full PDF of IEC TS 62257-9-5:2016 RLV
Withdrawn

Table X.3 *(2 of 7)*

	Included (yes/no)	Type	Language	Comments
User's manual				

Warranty length (months)	
Warranty terms and conditions	
Disposal instructions	

	Mass (g)	List of components included in product mass measurement
Complete product		

Cable	Length (m)	Description of cable
1		
2		
⋮		
n		

Component	Length (cm)	Width (cm)	Height (cm)	Number included	Description of component
Lamp unit 1					
Lamp unit 2					
⋮					
Lamp unit n					
Battery					
Charge controller					

Lamp unit	Type	Number of light points	Number of arrays	Description of lamp unit
1				
2				
⋮				
n				

Product arrangement description	

Setting	Name	Description of setting
1		
2		
⋮		
n		

Component	Material(s)	Description of material(s)
Lamp unit 1		
Lamp unit 2		
⋮		
Lamp unit n		
Battery unit		
Charge controller		

IECNORM.COM : Click to view the full PDF of IEC TS 62257-9-5:2016 RLV

Table X.3 *(3 of 7)*

Component	Number of indicators	Description of indicator(s)
Lamp unit 1		
Lamp unit 2		
⋮		
Lamp unit n		
Battery unit		
Charge controller		

Component	Feature(s)	Description of feature(s)
Lamp unit 1		
Lamp unit 2		
⋮		
Lamp unit n		
Battery unit		
Charge controller		

Radio (yes/no)	
Mobile phone charging (yes/no)	
Describe other included product accessories and connectors	

Charging mechanism	Supported (yes/no)	Specific type	Description of robustness
Central			
Independent			

PV module	Length (cm)	Width (cm)	Active area (cm^2)	Form
1				
2				
⋮				
n				

PV module	Cable length (m)	Active solar material	Encasing	Robustness
1				
2				
⋮				
n				

PV module junction box workmanship description	
Additional PV module information	
Can the product be turned on while being charged with its PV module? (yes/no)	

IECNORM.COM : Click to view the full PDF of IEC TS 62257-9-5:2016 RLV
Withdrawn

Table X.3 *(4 of 7)*

Primary form factor	
Secondary form factor(s)	
Expected uses	
Overall visual inspection comments	

Provided product specification	Outside of product's packaging box	Product documentation inside packaging box	Component	Other	Source of "other"
Battery chemistry					
Rated battery capacity (mAh)					
Battery nominal voltage (V)					
Lamp type(s)					
Lamp driver					
Charge controller present (yes/no)					
Charge controller deep discharge protection voltage (V)					
Charge controller overcharge protection voltage (V)					
PV module P_{mpp} (W)					
PV module V_{oc} (V)					
PV module I_{sc} (A)					
PV module V_{mpp} (V)					
PV module I_{mpp} (A)					

Describe any product specification discrepancies	

IECNORM.COM : Click to view the full PDF of IEC TS 62257-9-5:2016 RLV
Withdrawn

Table X.3 *(5 of 7)*

Provided run-time specification	Lamp setting	Outside of product's packaging box	Product documentation inside packaging box	Other	Source of "other"
Full-battery run time (h)	1				
	2				
	⋮				
	n				
Daily solar run time (h)	1				
	2				
	⋮				
	n				
Mechanical run time (h)	1				
	2				
	⋮				
	n				
Grid run time (h)	1				
	2				
	⋮				
	n				
Other run time (h)	1				
	2				
	⋮				
	n				
Describe any run time specification discrepancies					
Light output (lm)	1				
	2				
	⋮				
	n				
Describe any light output discrepancies					
Does the product function out of the box (yes/no)					

Sample ID	Switch(es) function (yes/no)	Connector(s) function (yes/no)	Comments
1			
2			
⋮			
n			
Indicate and describe strain reliefs, if applicable			

IECNORM.COM : Click to view the full PDF of IEC TS 62257-9-5:2016 RLV
Withdrawn

Table X.3 *(6 of 7)*

Sample ID	Number of poor solder joints	Number of workmanship deficiencies	Comments
1			
2			
⋮			
n			

Fixture of parts	Lamp unit(s)	Charge controller	PV module(s)	Remote	Other
Screws (yes/no)					
Glue (yes/no)					
Tape (yes/no)					
Clamps/straps (yes/no)					
Other (describe)					
General fixture of parts comments					

Description of methods used to secure wires and cables	
Easily replaceable battery (yes/no)	
Easily replaceable PCB (yes/no)	
Comments on ease of battery and/or PCB replacement	
Overall description of internal workmanship	

Properties, features, and information photographs

IECNORM.COM : Click to view the full PDF of IEC TS 62257-9-5:2016 RLV
Withdrawn

Table X.3 *(7 of 7)*

Specifications photographs
Functionality and internal inspection photographs

X.2.4 Light output test results

Table X.4 may be used to report the light output test results (Annex I).

Withdrawn
IECNORM.COM : Click to view the full PDF of IEC TS 62257-9-5:2016 RLV

Table X.4 – Light output test report template

Report name	Light output test
Procedure(s)	-
Manufacturer	-
Product name	-
Model number	-
Setting	
Test lab	-
Approving person	-
Approval date	

Sample ID	Total luminous flux (lm)	Correlated colour temperature	Colour rendering index	Drive current (A)	Drive voltage (V)	Waiting time (min)
1						
2						
⋮						
n						
Average						
Coefficient of Variation (%)						
Rating						
Average deviation from rating (%)						

Sample ID	Comments	Overall comments
1		
2		
⋮		
n		

X.2.5 Lumen maintenance test results

Table X.5 may be used to report the lumen maintenance test results (Annex J).

IECNORM.COM : Click to view the full PDF of IEC TS 62257-9-5:2016 RLV
Withdrawn

Table X.5 – Lumen maintenance test report template

Report name	Lumen maintenance test				
Procedure(s)	-				
Manufacturer	-				
Product name	-				
Model number	-				
Test lab	-				
Approving person	-				
Approval date					

Sample ID	RLO at 2 000 h (%)	RLO at 1 000 h (%)	RLO at 500 h (%)	Drive current (A)	Drive voltage (V)
1					
2					
⋮					
n					
Average (%)					
Coefficient of Variation (%)					

Sample ID	Comments	Overall comments
1		
2		
⋮		
n		

X.2.6 Battery test results

Table X.6 may be used to report the battery test results (Annex K).

IECNORM.COM : Click to view the full PDF of IEC TS 62257-9-5:2016 RLV
Withdrawn

Table X.6 – Battery test report template

Report name	Battery test	
Procedure(s)	-	
Manufacturer	-	
Product name	-	
Model number	-	
Test lab	-	
Approving person	-	
Approval date		
Battery chemistry		
Battery nominal voltage (V)		
Battery discharge rate during test		
Sample ID	Battery capacity (mAh)	Battery storage efficiency (%)
1		
2		
⋮		
n		
Average (%)		
Coefficient of Variation (%)		
Rating		
Average deviation from rating (%)		
Sample ID	Comments	Overall comments
1		
2		
⋮		
n		

X.2.7 Full-battery run time test results

Table X.7 may be used to report the full-battery run time test results (Annex M).

Table X.7 – Full-battery run time test report template *(1 of 2)*

Report name	Full-battery run time test
Procedure(s)	
Manufacturer	
Product name	
Model number	
Setting	
Test lab	
Approving person	-
Approval date	

IECNORM.COM : Click to view the full PDF of IEC TS 62257-9-5:2016 RLV
Withdrawn

Table X.7 *(2 of 2)*

Sample ID	Run time to L_{70} (h)	Average relative light output to L_{70} (%)	Average voltage operating point (V)	Average current operating point (mA)	Deep discharge protection present (yes/no)	Deep discharge protection voltage, if present (V)
1						
2						
⋮						
n						
Average						
Coefficient of Variation (%)						
Rating						
Average Deviation from Rating (%)						

Sample ID	Comments	Overall comments
1		
2		
⋮		
n		

Plot of results

-

-

Withdrawn
IECNORM.COM : Click to view the full PDF of IEC TS 62257-9-5:2016 RLV

X.2.8 Grid charge test results

Table X.8 may be used to report the grid charge test results (Annex O).

Table X.8 – Grid charge test report template

Report name	Grid charge test
Procedure(s)	-
Manufacturer	-
Product name	-
Model number	-
Test lab	-
Approving person	-
Approval date	

Sample ID	Grid charge run time to L_{70} (h)
1	
2	
⋮	
n	
Average (%)	
Coefficient of variation (%)	
Rating	
Average deviation from rating (%)	

Sample ID	Comments	Overall comments
1		
2		
⋮		
n		

X.2.9 Electromechanical charge test results

Table X.9 may be used to report the electromechanical charge test results (Annex P).

IECNORM.COM : Click to view the full PDF of IEC TS 62257-9-5:2016 RLV
Withdrawn

Table X.9 – Electromechanical charge test report template

Report name	Electromechanical charge test	
Procedure(s)	-	
Manufacturer	-	
Product name	-	
Model number	-	
Test lab	-	
Approving person	-	
Approval date		
Sample ID	Mechanical charger power (W)	Mechanical charge ratio
1		
2		
⋮		
n		
Average (%)		
Coefficient of variation (%)		
Rating		
Average deviation from rating (%)		

Sample ID	Comments	Overall comments
1		
2		
⋮		
n		

X.2.10 Outdoor photovoltaic module I-V characteristics test results

Table X.10 may be used to report the outdoor photovoltaic module I-V characteristics test results (Annex Q).

IECNORM.COM : Click to view the full PDF of IEC TS 62257-9-5:2016 RLV
Withdrawn

Table X.10 – Outdoor photovoltaic module I-V characteristics test report template *(1 of 2)*

Report name	PV module I-V characteristics test
Procedure(s)	-
Manufacturer	-
Product name	-
Model number	-
Test lab	-
Test location	
Approving person	-
Approval date	

Sample ID	Measurements at STC				
	Short-circuit current (A)	Open-circuit voltage (V)	Maximum power point		
			Power (W)	Current (A)	Voltage (V)
1					
2					
⋮					
n					
Average					
Coefficient of Variation (%)					
Rating					
Average deviation from rating (%)					

Sample ID	Measurements at TMOT					Temperature coefficient for voltage (1/°C)
	Short-circuit current (A)	Open-circuit voltage (V)	Maximum power point			
			Power (W)	Current (A)	Voltage (V)	
1						
2						
⋮						
n						
Average						
Coefficient of Variation (%)						

IECNORM.COM : Click to view the full PDF of IEC TS 62257-9-5:2016 RLV
Withdrawn

Table X.10 *(2 of 2)*

Sample ID	Comments	Overall comments
1		
2		
⋮		
n		
I-V curve plot(s)		

X.2.11 Solar charge test results

Table X.11 may be used to report the solar charge test results (Annex R).

Withdrawn
IECNORM.COM : Click to view the full PDF of IEC TS 62257-9-5:2016 RLV

Table X.11 – Solar charge test report template

Report name	Solar charge test
Procedure(s)	-
Manufacturer	-
Product name	-
Model number	-
Test lab	-
Approving person	-
Approval date	

Sample ID	Battery charging circuit efficiency (%)	Solar operation efficiency (%)	Solar run time (h)
1			
2			
⋮			
n			
Average (%)			
Coefficient of Variation (%)			

Sample ID	Comments	General comments
1		
2		
⋮		
n		

X.2.12 Charge controller behaviour test results

Table X.12 may be used to report the charge controller behaviour test results (Annex S).

IECNORM.COM : Click to view the full PDF of IEC TS 62257-9-5:2016 RLV
Withdrawn

Table X.12 – Charge controller behaviour test report template

Report name	Charge controller behaviour test
Procedure(s)	
Manufacturer	
Product name	
Model number	
Test lab	
Approving	-
Approval date	

Active deep discharge protection (yes/no)	
Active overcharge protection (yes/no)	
Passive deep discharge protection (yes/no)	
Passive overcharge protection (yes/no)	

Sample ID	Deep discharge protection voltage (V)	Overcharge protection voltage (V)	Passive deep discharge protection voltage at 24 h (V/cell)	Passive overcharge continuous charging current (mA)	30-day battery standby loss fraction (%)
1					
2					
⋮					
n					
Average					
Coefficient of Variation (%)					
Rating					
Average Deviation from Rating (%)					

Sample ID	Comments	General comments
1		
2		
⋮		
n		

X.2.13 Light distribution test results

Table X.13 may be used to report the light distribution test results (Annex T).

IECNORM.COM : Click to view the full PDF of IEC TS 62257-9-5:2016 RLV
Withdrawn

Table X.13 – Light distribution test report template

Report name	Light distribution test
Procedure(s)	-
Manufacturer	-
Product name	-
Model number	-
Setting	
Test lab	-
Approving person	-
Approval date	

Sample ID	Vertical full width half maximum angle (°)	Horizontal full width half maximum angle (°)	Average useable area through L_{70} (m^2)	Drive current (A)	Drive voltage (V)
1					
2					
⋮					
n					
Average					
Coefficient of Variation (%)					

Sample ID	Comments	General comments
1		
2		
⋮		
n		

Plots

IECNORM.COM : Click to view the full PDF of IEC TS 62257-9-5:2016 RLV
Withdrawn

X.2.14 Physical and water ingress protection test results

Table X.14 may be used to report the water exposure and physical ingress protection test results (Annex U).

Table X.14 – Physical and water ingress protection test report template

Report name	Physical and water ingress protection test			
Procedure(s)	-			
Manufacturer	-			
Product name	-			
Model number	-			
Test lab	-			
Approving person	-			
Approval date				
Minimum required water exposure rating				
Minimum required physical ingress protection rating				
Sample ID	**Water exposure rating**	**Method used**	**Physical ingress protection rating**	**Method used**
1				
2				
⋮				
n				

Sample ID	Comments	General comments
1		
2		
⋮		
n		

Photographs

-

-

IECNORM.COM : Click to view the full PDF of IEC TS 62257-9-5:2016 RLV
Withdrawn

X.2.15 Mechanical durability test results

Table X.15 may be used to report the mechanical durability test results (Annex W).

Table X.15 – Mechanical durability test report template *(1 of 3)*

Report name	Mechanical durability test
Procedure(s)	
Manufacturer	
Product name	
Model number	
Test lab	
Approving person	-
Approval date	

Sample ID	1. Functional (pass/fail) 2. Damage (pass/fail) 3. Safety hazard(s) (pass/fail)						
	Drop 1	Drop 2	Drop 3	Drop 4	Drop 5	Drop 6	Comments
1							
2							
⋮							
n							
General drop test comments							

Sample ID	1. Cycles achieved 2. Damage (pass/fail) 3. Safety hazard(s) (pass/fail)				Comments
	Switch/connector 1	Switch/connector 2	…	Switch/connector n	
1					
2					
⋮					
n					
General switch and connector test comments					

IECNORM.COM : Click to view the full PDF of IEC TS 62257-9-5:2016 RLV
Withdrawn

Table X.15 *(2 of 3)*

Sample ID	Gooseneck cycles achieved	Damage (pass/fail)	Safety hazard(s) (pass/fail)	Comments
1				
2				
⋮				
n				
General gooseneck test comments				

Sample ID	1. Strain relief hanging time achieved (s) 2. Damage (pass/fail) 3. Safety hazard(s) (pass/fail)												Comments
	Cable end 1			Cable end 2			...			Cable end n			
	0	45	90	0	45	90	0	45	90	0	45	90	
1													
2													
⋮													
n													
General strain relief test comments													

Drop test photographs

-

-

IECNORM.COM : Click to view the full PDF of IEC TS 62257-9-5:2016 RLV
Withdrawn

Table X.15 *(3 of 3)*

Switch and connector test photographs
Gooseneck test photographs
Strain relief test photographs

Withdrawn
IECNORM.COM : Click to view the full PDF of IEC TS 62257-9-5:2016 RLV

X.2.16 Summary of test results

Table X.16 may be used to report a summary of the test results.

Table X.16 – Summary test report template *(1 of 3)*

Report name	**Summary**
Manufacturer	-
Product name	-
Model number	-
Test lab	-
Approving person	-
Approval date	

Metric	**Average measured value**	**Coefficient of variation (%)**	**Rating (if available)**	**Deviation, if applicable (%)**
Battery capacity (mAh)				
PV module power (W)				
Full battery run time, setting 1 (h)				
Full battery run time, setting 2 (h)				
⋮				
Full battery run time, setting n (h)				
Average luminous flux during discharge, setting 1 (lm)				
Average luminous flux during discharge, setting 2 (lm)				
⋮				
Average luminous flux during discharge, setting n (lm)				
Solar run time, setting 1 (h)				
Solar run time, setting 2 (h)				
⋮				
Solar run time, setting n (h)				

IECNORM.COM : Click to view the full PDF of IEC TS 62257-9-5:2016 RLV
Withdrawn

Table X.16 *(2 of 3)*

Metric	Average measured value	Coefficient of variation (%)	Rating (if available)	Deviation, if applicable (%)
Working area ≥ 25 lux, setting 1 (m^2)				
Working area ≥ 25 lux, setting 2 (m^2)				
⋮				
Working area ≥ 25 lux, setting n (m^2)				
Angle of radiation ≥ 4 lux, setting 1 (°)				
Angle of radiation ≥ 4 lux, setting 2 (°)				
⋮				
Angle of radiation ≥ 4 lux, setting n (°)				
Percentage of initial lumen output maintained (%)				
Colour rendering index, setting 1				
Colour rendering index, setting 2				
⋮				
Colour rendering index, setting n				
Correlated colour temperature, setting 1				
Correlated colour temperature, setting 2				
⋮				
Correlated colour temperature, setting n				
Number of non-functional samples after drop test				
Number of samples with safety hazards after drop test				
Number of non-functional samples after switch/connector test				

IECNORM.COM : Click to view the full PDF of IEC TS 62257-9-5:2016 RLV
Withdrawn

Table X.16 *(3 of 3)*

Metric	Average measured value	Coefficient of variation (%)	Rating (if available)	Deviation, if applicable (%)
Number of samples with safety hazards after switch/connector test				
Number of non-functional samples after gooseneck test				
Number of samples with safety hazards after gooseneck test				
Number of non-functional samples after strain relief test				
Number of samples with safety hazards after strain relief test				
RLO at 2 000 h				
RLO at 1 000 h				
RLO at 500 h				
General comments				

Withdrawn
IECNORM.COM : Click to view the full PDF of IEC TS 62257-9-5:2016 RLV

Annex X
(informative)

Reserved

Annex X is reserved as a placeholder.

Withdrawn
IECNORM.COM : Click to view the full PDF of IEC TS 62257-9-5:2016 RLV

Annex Y
(informative)

Photometer box for relative luminous flux measurements

Y.1 Background

Annex Y includes plans and instructions for building a photometer box (Figure Y.1 and Figure Y.2) – an optical cavity for relative luminous flux measurements that ~~may~~ can be used to measure the run time or lumen maintenance of lighting products, but not the absolute luminous flux of lighting products. Photometer boxes can be built for much lower cost than integrating spheres or similar equipment.

The box is a cube that is painted with high-reflectivity, matte white paint inside. The DUT is placed in the centre of the box either by hanging from the top or on a stand. An illuminance meter is placed in one of the corners with a baffle blocking direct light from the DUT. Because the ~~light~~ illuminance meter only "sees" reflected light, the measurements of relative illuminance in time are less sensitive to the arrangement of the lighting device and therefore more robust.

For a given product in a fixed orientation, the reading from the illuminance meter is directly proportional to the luminous flux of the DUT but does not represent the absolute luminous flux. The same photometer box and ~~light~~ illuminance meter should be used for any given test, since different boxes and ~~light~~ illuminance meters will result in different relative light outputs.

IEC

Figure Y.1 – Interior view of completed photometer box

IECNORM.COM : Click to view the full PDF of IEC TS 62257-9-5:2016 RLV
Withdrawn

IEC

Figure Y.2 – Exterior view of completed photometer box

Y.2 Plans

~~The measurements in the plans below are in cm (see Figures Y.3 and Y.4).~~

Plans for a photometer box are given in Figure Y.3 and Figure Y.4.

IECNORM.COM : Click to view the full PDF of IEC TS 62257-9-5:2016 RLV
Withdrawn

Dimensions in centimetres

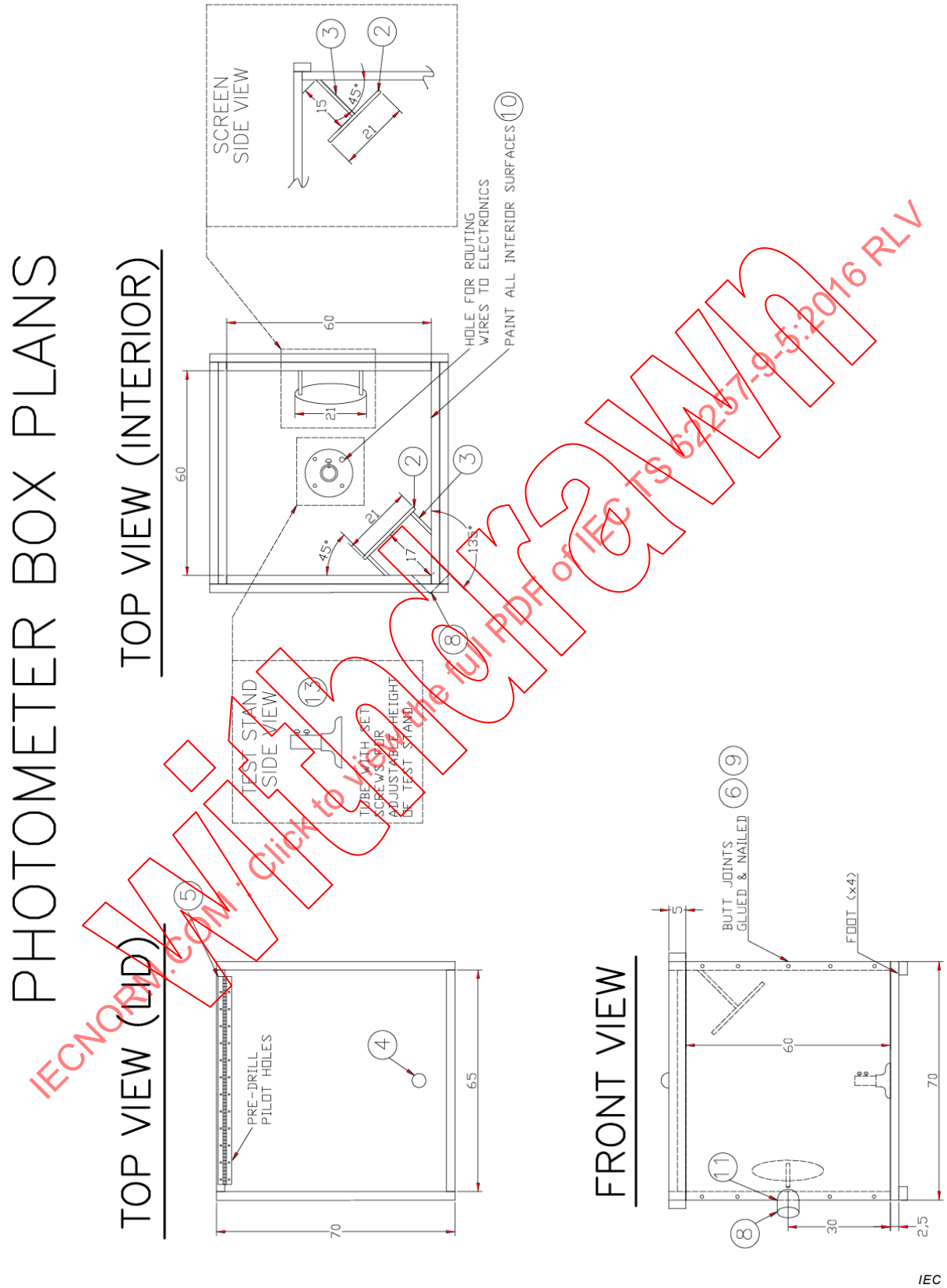

IEC

Figure Y.3 – Photometer box dimensions

IECNORM.COM : Click to view the full PDF of IEC TS 62257-9-5:2016 RLV
Withdrawn

Dimensions in centimetres

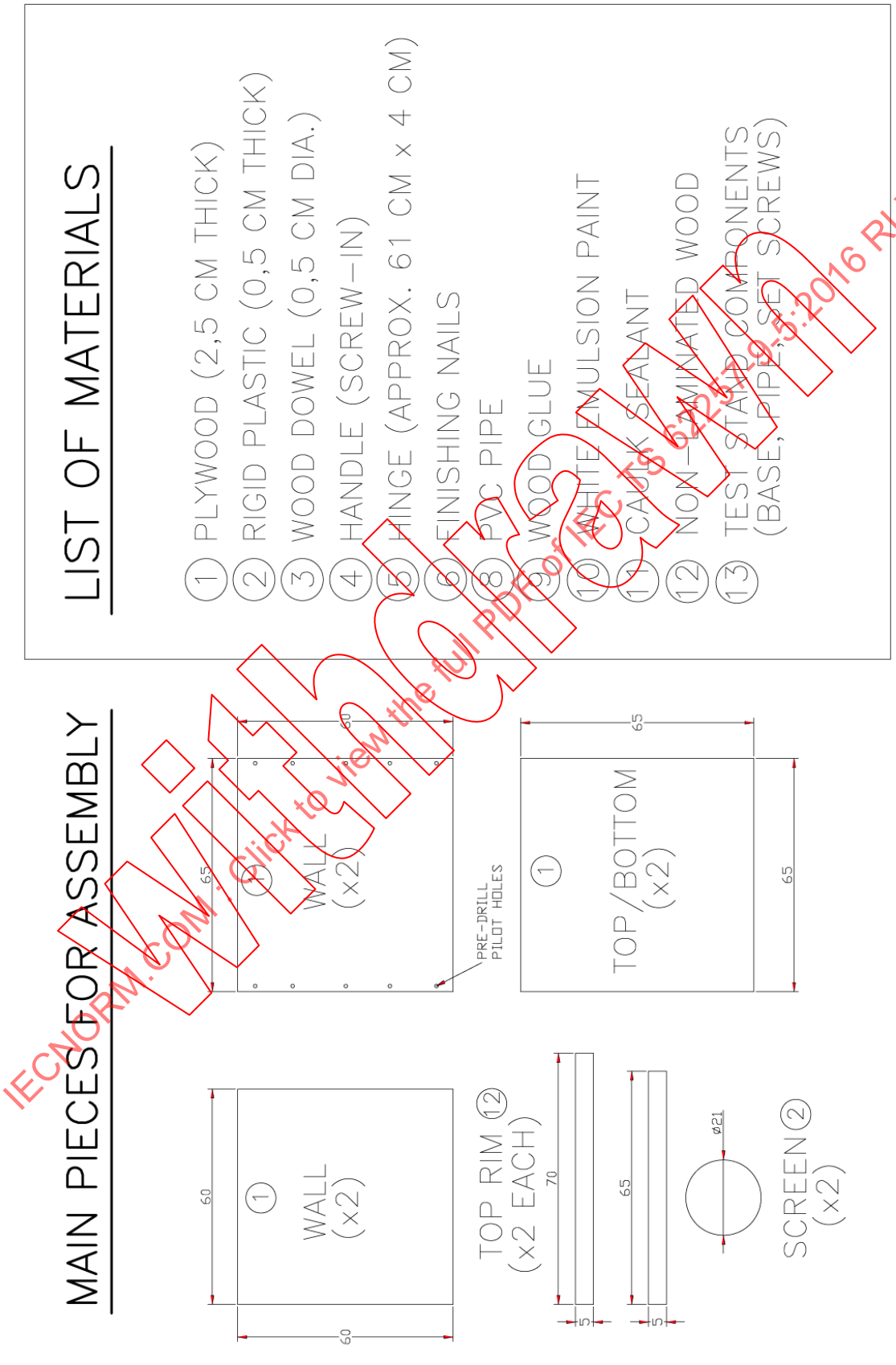

IECNORM.COM : Click to view the full PDF of IEC TS 62257-9-5:2016 RLV
Withdrawn

Figure Y.4 – Photometer box assembly pieces and list of materials

Y.3 Instructions for construction

The following steps shall be followed.

a) Cut the pieces in Figure Y.4 to the dimensions shown in Figure Y.3 – Use a table saw if available.

b) Pre-drill pilot holes on 65 cm × 60 cm wall pieces.

c) Apply glue along 2,5 cm × 60 cm area of wall pieces with pilot holes.

d) Use four clamps (one at top, one at bottom for each side) to hold the four walls together as shown on in the top view of Figure Y.3.

e) Drive finish nails into pre-drilled pilot holes.

f) Allow 12 h for glue to cure.

g) Remove clamps.

h) Check butt joints for structural integrity.

i) Apply glue to bottom edges of walls.

j) Align and clamp bottom piece to walls.

k) Allow 12 h for glue to cure.

l) Remove clamps.

m) Check for structural integrity.

n) Cut 4 cm × 4 cm feet (as shown in front view of Figure Y.3) and glue to four exterior corners of bottom piece. The weight of the photometer box will hold the feet in place while the glue cures.

o) Apply glue to 2,5 cm width of "top rim" pieces along top outside perimeter of walls.

p) Place "top rim" pieces on outside walls as shown in Figure Y.3 and clamp in place.

q) Allow 12 h for glue to cure.

r) Remove clamps.

s) Check for structural integrity.

t) Drill hole in corner of photometer box for placement of PVC section – Use a hole saw if available.

u) Cut PVC pipe to appropriate length and mitre cut to tightly fit against hole in photometer box.

v) Affix PVC section to photometer box with caulk sealant, making sure to seal against all possible light intrusion at joint.

w) Assemble test stand and attach with wood screws to centre bottom of photometer box as shown in top view.

x) Cut plastic screens and drill holes for insertion of dowels.

y) Drill holes at appropriate angles and locations for screen dowels, refer to top view (interior).

z) Insert screen dowels into holes in photometer box walls. No glue should be required.

aa) Place top lid piece onto photometer box.

bb) Align hinge as shown in top view (lid).

cc) Pre-drill pilot holes and attach hinge with wood screws.

dd) Pre-drill hole for handle (as shown in top view) and attach to lid.

ee) Paint all interior surfaces of photometer box with white emulsion paint, matte finish. Several light coats are recommended (at least five coats).

IECNORM.COM : Click to view the full PDF of IEC TS 62257-9-5:2016 RLV
Withdrawn

Annex Z
(informative)

Photometer tube for relative luminous flux measurements

Z.1 Background

Annex Z includes plans and instructions for building a photometer tube – a very simple optical cavity for relative illuminance measurements that ~~may~~ can be used to measure the run time or lumen maintenance of lighting products, but not the absolute luminous flux of lighting products. Photometer tubes are very low cost option; the only option with lower equipment costs is placing a lighting product in a dark room or closet and arranging the ~~light~~ illuminance meter in a fixed position relative to the product.

The tube is simply a cardboard (or similar) tube with ~~a photometer~~ an illuminance meter sensor fixed on one end. The other end of the tube is placed so the sensor has a clear view of the peak light output from the DUT. The function of the cardboard tube is to block stray light.

For a given product in a fixed orientation, the reading from the illuminance meter is directly proportional to the luminous flux of the DUT but does not represent the absolute luminous flux. The same photometer tube and ~~light~~ illuminance meter should be used for any given test, since different ~~boxes~~ tubes and ~~light~~ meters will result in different relative light outputs.

Z.2 Plans

The photo below (Figure Z.1) and schematic (see J.4.2.1.3) give a general indication of how to construct a photometer tube.

IEC

Figure Z.1 – Completed photometer tube

Z.3 Instructions for construction

Photometer tubes can be constructed of a variety of materials. The specific materials should be selected based on availability. Below are some guidelines for selecting materials.

Tube: cardboard or paperboard is typically used. PVC pipe or similar materials may also be used. The inside diameter should be between 5 cm and 7 cm. The length should be approximately 50 cm. No coatings are required on the inside of the tube.

~~Photometer: the photometer should have appropriate sensitivity to measure.~~

Illuminance meter: the illuminance meter shall meet the requirements in Table CC.2.

Cap: the cap should fit snugly in one end of the tube and hold the ~~photometer~~ illuminance meter sensor in a fixed position so it is faced directly down the centre axis of the tube. Wood that has been turned on a lathe is often the best material, since it can be sanded to fit.

IECNORM.COM : Click to view the full PDF of IEC TS 62257-9-5:2016 RLV

Annex AA
(~~normative~~ informative)

Field testing methods

AA.1 Background

Annex AA describes "field modifications" to the laboratory test methods described in other annexes of this ~~document and are generally applicable for use in field screening (see Clause 9)~~ part of IEC 62257. Note that the results from field measurements are not directly comparable to those from laboratory measurements because they are generally not made with instruments that are as accurate or procedures that are as controlled or repeatable.

The use of these methods requires some care and understanding of the way off-grid lighting products function.

The following measurements may be made in the field with modifications to the laboratory methods:

- full-battery run time;
- solar run time;
- luminous flux;
- light distribution.

AA.2 Test outcomes

The test outcomes of the field tests are listed in Table AA.1.

Table AA.1 – Field test outcomes

Metric	Reporting units	Related aspects	Notes
Full-battery run time	Hours (h)	4.2.8.5 Lighting full-battery run time	Run time from a full charge.
Solar run time	Hours (h)	4.2.8.3 Solar-day lighting run time	Run time after one day of solar charging, done over several days to establish a clear trend.
Luminous flux	Lumens (lm)	4.2.9.1 Average luminous flux output	Completed while the product is self-powered.
Light distribution	Illuminance on a surface (lux)	4.2.9.3 Average light distribution characteristics	Completed while the product is self-powered.

AA.3 Related tests

The field testing methods are related to the light output test (Annex I), the full-battery run time test (Annex M), and the light distribution test (Annex T). The full laboratory procedures should be read and understood before implementing the field modifications described below.

IECNORM.COM : Click to view the full PDF of IEC TS 62257-9-5:2016 RLV
Withdrawn

AA.4 Laboratory requirements

A technically adept, detail-oriented person to make measurements.

AA.5 Procedures

AA.5.1 Full-battery run time test

AA.5.1.1 General

The DUT is set in the measurement cavity and turned on in order to record its light output over the duration of its discharge.

AA.5.1.2 Equipment requirements

The following equipment is required. Equipment shall meet the requirements in Table CC.2.

- ~~An~~ Appropriate optical cavity or dark room/closet for discharging the light.
- ~~Light~~ Illuminance meter.
- Stopwatch or similar timekeeping equipment.

AA.5.1.3 Test prerequisites

Prepare the optical cavity (see Annex Y and Annex Z for examples) or locate a dark, unused room or closet where discharge measurements ~~may~~ can be made. If the DUT's battery has not been cycled frequently in the previous days, the DUT should be fully charged and discharged at least twice before beginning the test.

AA.5.1.4 Procedure

Refer to Annex M for the official procedure. The modifications to the procedure are the following:

a) Instead of charging on a battery analyser, fully charge the battery using whichever charging mechanism is provided by the manufacturer or an alternative if it is safe and effective. Note that for solar products that have an external solar module, it is often possible to charge with an AC/DC adapter that has appropriate voltage and current characteristics (i.e. those that approximately match the PV module).

b) Do not record the battery current and voltage during the discharge.

c) Instead of using automated data logging, take manual readings from the ~~light~~ illuminance meter at regular intervals during the test. Table AA.2 is an example of a datasheet to support the measurements.

IECNORM.COM : Click to view the full PDF of IEC TS 62257-9-5:2016 RLV
Withdrawn

Table AA.2 – Example run time test datasheet

Run time test datasheet			
Model tested: brand name, manufacturer's name		**Sample tested:** code used for identification of each sample	**Date/location:**
Position of the lantern: hanging or supported			
Charge type: full recharge (note method) OR solar charge (note weather)			
Time		Illuminance	
T_0	Starting time of the light application		
Planned measurement time	Real measurement time		
T_0+ 5 min	T_0 +…	Measured value with the illuminance meter	
T_1 = T_0+20 min	T_1 =	…	
T_2 = T_1+15 min	T_2 =	…	
T_3 = T_2+15 min	T_3 =	…	
T_4 = T_3+15 min	T_4 =	…	
T_5 = T_4+15 min	T_5 =	…	
…	…	…	
~~T0 + n~~ T_n	~~T0 + …~~ T_n +=	Measured value with the illuminance meter	
~~Notes~~ **Remarks on test:**			

AA.5.2 Solar run time test

AA.5.2.1 General

The DUT is charged with a solar module, then set in the measurement cavity and turned on in order to record its light output over the duration of its discharge. This is repeated over successive days to estimate the solar run time.

AA.5.2.2 Equipment requirements

The following equipment is required. Equipment shall meet the requirements in Table CC.2.

- ~~An~~ Appropriate optical cavity or dark room/closet for discharging the light.
- ~~Light~~ Illuminance meter.
- Stopwatch or similar timekeeping equipment.

AA.5.2.3 Test prerequisites

Prepare the optical cavity (see Annex Y and Annex Z for examples) or locate a dark, unused room or closet where discharge measurements ~~may~~ can be made. If the DUT's battery has not been cycled frequently in the previous days, the DUT should be fully charged and discharged at least twice before beginning the test.

AA.5.2.4 Procedure

Starting with a fully discharged DUT. A DUT is considered fully discharged when it reaches its L_{70}. This is the point at which the DUT provides 70 % of the initial light output. The initial light output is the light output reading taken at minute 20 of the DUT's full-battery run time. Refer to Annex N for guidance on fully discharging the DUT.

IECNORM.COM : Click to view the full PDF of IEC TS 62257-9-5:2016 RLV
Withdrawn

Charge the DUT with solar energy during the day and discharge the DUT at night. Repeat the cycle over at least five sunny days.

Refer to Annex M for the full-battery discharge and measurement procedure. The modifications to the procedure are the following.

a) Instead of charging on a battery analyser, partially charge the battery using the solar module provided by the manufacturer on a sunny day. Ensure the solar module captures the full solar resource by placing it in an unshaded location for the whole day, facing the equator at a tilt equal to the latitude. Note the weather patterns on the data sheet.

b) Do not record the battery current and voltage during the discharge.

c) Instead of using automated data logging, take manual readings from the ~~light~~ illuminance meter at regular intervals during the test.

d) Repeat the test over several successive sunny days. Do not charge or discharge the product on "off" days.

e) After five sunny days, find the average run time after a solar charge.

AA.5.3 Luminous flux test

AA.5.3.1 General

The DUT luminous flux is measured with a modified version of the "multiplane light distribution" method (see I.4.3).

AA.5.3.2 Equipment requirements

The following equipment is required. Equipment shall meet the requirements in Table CC.2.

- A room that can be darkened (without stray light) with low-reflectivity surfaces inside.
- ~~Light~~ Illuminance meter.

AA.5.3.3 Test prerequisites

Prepare the room to make measurements by eliminating sources of reflection. If the DUT's battery has not been cycled frequently in the previous days, the DUT should be fully charged and discharged at least twice before beginning the test.

AA.5.3.4 Procedure

Refer to Annex I for the official multiplane light distribution procedure. The modifications to the procedure are the following:

a) Instead of powering the DUT with an external power supply, fully charge the battery before the test using whichever charging mechanism is provided by the manufacturer or an alternative if it is safe and effective. Note that for solar products that have an external solar module, it is often possible to charge with an AC/DC adapter that has appropriate voltage and current characteristics (i.e. those that approximately match the PV module).

b) Operate the DUT using the fully charged battery during the test.

c) Work quickly to avoid changes in the light output that occur during the test. Consider the "trend" in light output from the full-battery run time test (Annex M or AA.5.1) when you plan the multiplane test logistics. If the DUT has a particularly fast-changing light output during the discharge, ~~it may be appropriate to divide~~ the multiplane measurements may be divided into parts, recharging the DUT between the parts.

IECNORM.COM : Click to view the full PDF of IEC TS 62257-9-5:2016 RLV
Withdrawn

AA.5.4 Light distribution test

AA.5.4.1 General

The DUT light distribution is measured with a modified version of the "light distribution" method. If the multiplane distribution method has been used to measure luminous flux, much of the light distribution data will be available from that test.

AA.5.4.2 Equipment requirements

The following equipment is required. Equipment shall meet the requirements in Table CC.2.

- A room that can be darkened (without stray light) with low-reflectivity surfaces inside.
- ~~Light~~ Illuminance meter.

AA.5.4.3 Test prerequisites

Prepare the room to make measurements by eliminating sources of reflection. If the DUT's battery has not been cycled frequently in the previous days, the DUT should be fully charged and discharged at least twice before beginning the test.

AA.5.4.4 Procedure

Refer to Annex T for the official procedures. The modifications to the procedure are the following.

a) Instead of powering the DUT with an external power supply, fully charge the battery before the test using whichever charging mechanism is provided by the manufacturer or an alternative if it is safe and effective. Note that for solar products that have an external solar module, it is often possible to charge with an AC/DC adapter that has appropriate voltage and current characteristics (i.e. those that approximately match the PV module).

b) Operate the DUT using the fully charged battery during the test.

c) Work quickly to avoid changes in the light output that occur during the test. Consider the "trend" in light output from the full-battery run time test (Annex M or AA.5.1) when you plan the test logistics. If the DUT has a particularly fast-changing light output during the discharge, ~~it may be appropriate to divide~~ the measurements may be divided into parts, recharging the DUT between the parts.

AA.6 Reporting

Report the following in the field test report ~~(slight modifications to the sample templates provided in Annex X may be appropriate)~~:

- Metadata:
  - report name;
  - procedure(s) used (note that they were with field modifications);
  - DUT manufacturer;
  - DUT name;
  - DUT model number;
  - DUT setting;
  - location of test;
  - technician;
  - date of test.
- Main results for tested DUT aspects for samples 1 through n:
  - full-battery run time;

Withdrawn
IECNORM.COM : Click to view the full PDF of IEC TS 62257-9-5:2016 RLV

  - solar run time;
  - luminous flux output;
  - light distribution.
- DUT's rating for aspects tested, if available.
- Supporting information:
  - notes and hand-collected data sheets
  - illustrative plots (e.g. plot showing the illuminance against the run time (min), similar to Figure J.2).
- Comments:
  - individual comments, as necessary, for samples 1 through n;
  - overall comments, as necessary, for collective set of samples 1 through n.

Withdrawn
IECNORM.COM : Click to view the full PDF of IEC TS 62257-9-5:2016 RLV

Annex BB
(~~informative~~ normative)

Battery durability test

~~BB.1 Background~~

~~The battery durability test aims to identify batteries unsuitable for the application in stand-alone lighting kits. The procedures are related to the regular use (cycling of the batteries) and storage of the stand-alone lighting kits.~~

~~In general terms, the cycling procedures simulate the DUT's typical daily use, and the storage procedures use methods to accelerate the ageing mechanisms occurring during storage. These methods enable the identification of batteries which age prematurely and are therefore unsuitable for use in stand-alone lighting kits.~~

~~BB.2 Test outcomes~~

~~The test outcomes of the battery durability test are listed in Table BB.1.~~

~~**Table BB.1 – Battery durability test outcomes**~~

~~Metric~~	~~Reporting Units~~	~~Related aspects~~	~~Notes~~
~~Capacity loss from cycling (δC)~~	~~Percentage (%)~~	~~4.2.5.3 Battery durability parameters~~	
~~Capacity loss from storing (δC)~~	~~Percentage (%)~~	~~4.2.5.3 Battery durability parameters~~	
~~Number of cycles necessary to reach 60 % of initial battery capacity (i_{60})~~	~~Percentage (%)~~	~~4.2.5.3 Battery durability parameters~~	~~Only for DUTs with lithium batteries~~

~~BB.3 Related tests~~

~~The battery durability test is related to the battery test (Annex K).~~

~~Related standards: PVRS 5A, DIN EN 43539-5, (Lead-acid); DIN EN 43539-15, DIN EN 69151, (NiMH); DIN EN 61960 (Lithium-ion)~~

~~BB.4 Procedure~~

~~BB.4.1 Cycling test for lead-acid batteries~~

~~BB.4.1.1 General~~

~~The DUT's sealed lead-acid battery is cycled 50 times on a battery analyser and the data from the charge-discharge cycles are used to determine the DUT's battery resistance to cycling. The capacity loss due to cycling shall be measured. The capacity loss between the 5th and the 50th cycle should not be higher than 25 %, and the measured battery capacity after the cycling procedure should not be less than 80 % of the measured battery capacity before the cycling procedure.~~

IECNORM.COM : Click to view the full PDF of IEC TS 62257-9-5:2016 RLV
Withdrawn

BB.4.1.2 Equipment requirements

A battery analyser with an overall accuracy for voltage, current, and capacity measurements within the following tolerances:

- ± 1 % for voltage;
- ± 1 % for current;
- ± 1 % for capacity.

BB.4.1.3 Test prerequisites

The DUT's battery shall be recently received and fully discharged. The battery capacity shall have been determined using the sealed lead-acid battery test (Annex K). The product shall have been cycled no more than two times and shall have been stored for no more than 1 week since undergoing the battery capacity test. The battery may be removed from the DUT. The test shall be carried out at 20 °C ± 5 °C.

BB.4.1.4 Procedure

These steps shall be followed, starting with a fully discharged battery:

a) Charge and discharge the DUT's battery over 50 cycles using the following procedure. The value of I_t for the 50 cycles shall be determined using the battery capacity measured in the battery test.

   1) Charge the battery with a constant current at a rate of 0,1 I_t A until a voltage of 2,4 V/cell is reached, followed by a constant voltage charge at 2,4 V/cell for 30 min.

   2) Discharge the battery at a rate of 0,1 I_t A until a voltage of 1,8 V/cell is reached. Calculate the battery capacity from the discharge data.

b) Determine the DUT's battery capacity according to the sealed lead-acid battery test, K.4.2 in the battery test annex (Annex K).

BB.4.1.5 Calculations

The following calculations shall be made:

a) Calculate the DUT's battery capacity after each of the 50 cycles using the following formula:

$$C_i = \sum_t (I_d(t) \times \Delta t)$$

where

C_i is the battery capacity measured in cycle i, in milliampere-hours (mAh);

I_d is the current recorded during the discharge cycles, in milliamperes (mA);

Δt is the time interval between subsequent data points, in hours (h).

b) Determine the capacity loss from the 5th to the 50th cycle using following formula:

$$\delta C = \left(1 - \frac{C_{50}}{C_5}\right) \times 100\%$$

where

δC is the percent capacity loss between the 5th and the 50th cycle (%);

C_{50} is the battery capacity measured in the 50th cycle, in milliampere-hours (mAh);

C_5 is the battery capacity measured in the 5th cycle, in milliampere-hours (mAh).

IECNORM.COM : Click to view the full PDF of IEC TS 62257-9-5:2016 RLV
Withdrawn

BB.4.2 Storage test for sealed lead-acid batteries

BB.4.2.1 General

The DUT's sealed lead-acid battery is stored for 30 days connected to a resistance corresponding to a current of 0,2 I_t A, which causes a deep discharge. The measured battery capacity after the storage procedure should not be less than 80 % of the measured battery capacity before the storage procedure.

BB.4.2.2 Equipment requirements

The following equipment is required:

- Battery analyser with the voltage, current, and capacity measurement tolerances specified in BB.4.1.2.
- Wire cutters
- Wire strippers
- Soldering iron and solder
- Heat-shrink tubing and heat gun, or electrical tape
- Resistor with resistance corresponding to a current of 0,2 I_t A and a power rating that is greater than the maximum power dissipated during the test.

BB.4.2.3 Test prerequisites

The DUT's battery shall be recently received and fully charged. The battery capacity shall have been determined using the sealed lead-acid battery test (Annex K). The product shall have been cycled no more than two times and shall have been stored for no more than 1 week since undergoing the battery capacity test. The battery shall be removed from the DUT. The storage test shall be carried out at 30 °C ± 5 °C.

BB.4.2.4 Procedure

The following steps shall be followed, starting with a fully charged battery:

a) Discharge the battery at a rate of 0,1 I_t A until a voltage of 1,8 V/cell is reached. The value of I_t shall be determined using the battery capacity measured in the battery test (Annex K).

b) Connect across the battery terminals a resistor with resistance and power rating calculated using the following formulas, respectively:

$$R = \frac{V_{nom}}{0{,}2 \times I_t}$$

where

R is the resistance corresponding to a current of 0,2 I_t A, in ohms (Ω);

V_{nom} is the battery's nominal voltage, in volts (V);

I_t is the current corresponding to a 1 h discharge, in amperes (A).

$$P \geq \frac{\left(V_{initial}\right)^2}{R}$$

where

P is the resistor's power rating, in watts (W);

$V_{initial}$ is the battery voltage when the resistor is first connected, in volts (V);

R is the resistance of the selected resistor, in ohms (Ω).

c) Store the battery for 30 days at 30 °C ± 5 °C.

Withdrawn
IECNORM.COM : Click to view the full PDF of IEC TS 62257-9-5:2016 RLV

d) Determine the DUT's battery capacity according to the sealed lead-acid battery test, K.4.2 in the battery test annex (Annex K).

BB.4.2.5 Calculations

Determine the capacity loss using following formula:

$$\delta C = \left(1 - \frac{C_A}{C_B}\right) \times 100\ \%$$

where

δC is the percent capacity loss experienced by the battery after the 30 days storage (%);

C_A is the battery capacity measured after the storage, in milliampere-hours (mAh);

C_B is the battery capacity measured before the storage, in milliampere-hours (mAh).

BB.4.3 Cycling test for nickel-metal hydride batteries

BB.4.3.1 General

The DUT's nickel-metal hydride battery is cycled 50 times on a battery analyser with partial charge-discharge cycles.[6] The measured battery capacity after the cycling procedure should not be less than 80 % of the measured battery capacity before the cycling procedure.

BB.4.3.2 Equipment requirements

A battery analyser with the voltage, current, and capacity measurement tolerances specified in BB.4.1.2.

BB.4.3.3 Test prerequisites

The DUT's battery shall be recently received and fully discharged. The battery capacity shall have been determined using the nickel-metal hydride battery test (Annex K). The product shall have been cycled no more than two times and shall have been stored for no more than 1 week since undergoing the battery capacity test. The battery may be removed from the DUT. The test shall be carried out at 20 °C ± 5 °C.

BB.4.3.4 Procedure

The following steps shall be followed, starting with a fully discharged battery:

a) Partially charge and discharge the DUT's battery over 50 cycles using the following procedure. The value of I_t for the 50 cycles shall be determined using the battery capacity measured in the battery test (Annex K).

   1) Charge the battery with a constant current at a rate of 0,2 I_t A for 3 h and 10 min.

   2) Discharge the battery at a rate of 0,2 I_t A for 2 h and 20 min. Calculate the battery capacity from the discharge data.

b) Determine the DUT's battery capacity according to the nickel-metal hydride battery test, K.4.3 in the battery test annex (Annex K).

BB.4.3.5 Calculations

No additional calculations are required.

---

[6] If the battery analyser is not capable of carrying out incomplete cycles, the alternative is to carry out a full cycling test with a charge factor of 1,4. In this case the battery shall be charged with 0,2 I_t A for 7 hours and discharged to the cut-off voltage of 1 V/cell.

IECNORM.COM : Click to view the full PDF of IEC TS 62257-9-5:2016 RLV

BB.4.4 Storage test for nickel-metal hydride batteries

BB.4.4.1 General

The DUT's nickel-metal hydride battery is stored for 30 days at 60 °C ± 5 °C connected to a resistance corresponding to a current of 0,2 I_t A, which causes a deep-discharge in the battery.

BB.4.4.2 Equipment requirements

- Battery analyser with the voltage, current, and capacity measurement tolerances specified in BB.4.1.2.
- Wire cutters
- Wire strippers
- Soldering iron and solder
- Heat-shrink tubing and heat gun, or electrical tape
- Oven, environmental chamber, or other apparatus capable of maintaining temperature in the required range
- Resistor with resistance corresponding to a current of 0,2 I_t A and a power rating that is greater than the maximum power dissipated during the test.

BB.4.4.3 Test prerequisites

The battery shall be recently received and fully charged. The battery capacity shall have been determined using the nickel-metal hydride battery test (Annex K). The product shall have been cycled no more than two times and shall have been stored for no more than 1 week since undergoing the battery capacity test. The battery shall be taken out of the DUT. The storage test shall be carried out at 60 °C ± 5 °C.

BB.4.4.4 Procedure

The following steps shall be followed, starting with a fully charged battery:

a) Discharge the battery at a rate of 0,2 I_t A until a voltage of 1,0 V/cell is reached. The value of I_t shall be determined using the battery capacity measured in the battery test (Annex K).

b) Connect across the battery terminals a resistor with resistance and power rating determined using the formulas listed in BB.4.2.4, step (b).

c) Store the battery for 30 days at 60 °C ± 5 °C.

d) Determine the DUT's battery capacity according to the nickel-metal hydride battery test, K.4.3 in the battery test annex (Annex K).

BB.4.4.5 Calculations

The calculations required for the storage test for nickel-metal hydride batteries are identical to those for lead-acid batteries (BB.4.2.5).

IECNORM.COM : Click to view the full PDF of IEC TS 62257-9-5:2016 RLV
Withdrawn

~~**BB.4.5 Cycling test for nickel-cadmium batteries**~~

~~**BB.4.5.1 General**~~

~~The DUT's nickel-cadmium battery is cycled 50 times on a battery analyser with partial charge-discharge cycles.[7)] The measured battery capacity after the cycling procedure should not be less than 80 % of the measured battery capacity before the cycling procedure.~~

~~**BB.4.5.2 Equipment requirements**~~

~~A battery analyser with the voltage, current, and capacity measurement tolerances specified in BB.4.1.2.~~

~~**BB.4.5.3 Test prerequisites**~~

~~The DUT's battery shall be recently received and fully discharged. The battery capacity shall have been determined using the nickel-cadmium battery test (Annex K). The product shall have been cycled no more than two times and shall have been stored for no more than 1 week since undergoing the battery capacity test. The battery may be removed from the DUT. The test shall be carried out at 20 °C ± 5 °C.~~

~~**BB.4.5.4 Procedure**~~

~~The following steps shall be followed, starting with a fully discharged battery:~~

~~a) Partially charge and discharge the DUT's battery over 50 cycles using the following procedure. The value of I_t for the 50 cycles shall be determined using the battery capacity measured in the battery test (Annex K).~~

~~1) Charge the battery with a constant current at a rate of 0,2 I_t A for 3 h and 10 min.~~

~~2) Discharge the battery at a rate of 0,2 I_t A for 2 h and 20 min. Calculate the battery capacity from the discharge data.~~

~~b) Determine the DUT's battery capacity according to the nickel-cadmium battery test, K.4.6 in the battery test annex (Annex K).~~

~~**BB.4.5.5 Calculations**~~

~~No additional calculations are required.~~

~~**BB.4.6 Storage test for nickel-cadmium batteries**~~

~~**BB.4.6.1 General**~~

~~The DUT's nickel-cadmium battery is stored for 30 days at 60 °C ± 5 °C connected to a resistance corresponding to a current of 0,2 I_t A, which causes a deep-discharge in the battery.~~

~~**BB.4.6.2 Equipment requirements**~~

- ~~Battery analyser with the voltage, current, and capacity measurement tolerances specified in BB.4.1.2.~~
- ~~Wire cutters~~
- ~~Wire strippers~~
- ~~Soldering iron and solder~~
- ~~Heat-shrink tubing and heat gun, or electrical tape~~

~~7)~~ ~~If the battery analyser is not capable of carrying out incomplete cycles, the alternative is to carry out a full cycling test with a charge factor of 1,4. In this case the battery shall be charged with 0,2 I_t A for 7 h and discharged to the cut-off voltage of 1 V/cell.~~

IECNORM.COM : Click to view the full PDF of IEC TS 62257-9-5:2016 RLV
Withdrawn

- Oven, environmental chamber, or other apparatus capable of maintaining temperature in the required range
- Resistor with resistance corresponding to a current of 0,2 I_t A and a power rating that is greater than the maximum power dissipated during the test.

BB.4.6.3 Test prerequisites

The battery shall be recently received and fully charged. The battery capacity shall have been determined using the nickel-cadmium battery test (Annex K). The product shall have been cycled no more than two times and shall have been stored for no more than 1 week since undergoing the battery capacity test. The battery shall be taken out of the DUT. The storage test shall be carried out at 60 °C ± 5 °C.

BB.4.6.4 Procedure

The following steps shall be followed, starting with a fully charged battery:

a) Discharge the battery at a rate of 0,2 I_t A until a voltage of 1,0 V/cell is reached. The value of I_t shall be determined using the battery capacity measured in the battery test (Annex K).

b) Connect across the battery terminals a resistor with resistance and power rating determined using the formulas listed in BB.4.2.4, step (b).

c) Store the battery for 30 days at 60 °C ± 5 °C.

d) Determine the DUT's battery capacity according to the nickel-cadmium battery test, K.4.6 in the battery test annex (Annex K).

BB.4.6.5 Calculations

The calculations required for the storage test for nickel-cadmium batteries are identical to those for lead-acid batteries (BB.4.2.5).

BB.4.7 Cycling test for lithium-ion batteries

BB.4.7.1 General

The DUT's lithium-ion battery is cycled during one month on a battery analyser. The number of cycles necessary to reach 60 % of the initial capacity should not be lower than 300 for batteries composed of a more than one cell and 400 for batteries composed of a single cell, and the measured battery capacity after the cycling procedure should not be less than 80 % of the measured battery capacity before the cycling procedure.

BB.4.7.2 Equipment requirements

A battery analyser with the voltage, current, and capacity measurement tolerances specified in BB.4.1.2.

BB.4.7.3 Test prerequisites

The battery shall be recently received and fully discharged. The battery capacity shall have been determined using the lithium-ion battery test (Annex K). The product shall have been cycled no more than two times and shall have been stored for no more than 1 week since undergoing the battery capacity test. The battery may be removed from the DUT. The test shall be carried out at 20 °C ± 5 °C.

BB.4.7.4 Procedure

The following steps shall be followed, starting with a fully discharged battery:

IECNORM.COM : Click to view the full PDF of IEC TS 62257-9-5:2016 RLV

a) Charge and discharge the DUT's battery over 1 month using the following procedure. The value of I_t for the 50 cycles shall be determined using the battery capacity measured in the battery test (Annex K).

1) Charge the battery with a constant current at a rate of 1 I_t A until a voltage of 4,2 V/cell is reached, followed by a constant-voltage charge at 4,2 V/cell for 1 h.

2) Discharge the battery at a rate of 0,2 I_t A until a voltage of 3,0 V/cell is reached. Calculate the battery capacity from the discharge data.

b) Determine the DUT's battery capacity according to the lithium-ion battery test, K.4.4 in the battery test annex (Annex K).

BB.4.7.5 Calculations

The following calculations shall be made:

a) Calculate the capacity for each cycle using the formula in BB.4.1.5, step (a).

b) Plot the capacity values against the number of cycles. Using linear regression, find the best-fit line relating capacity to cycle number, corresponding to the following formula:

$$C_i = a \times_i + C_{\text{Initial}}$$

where

C_i is the capacity at cycle i, in milliampere-hours (mAh);

a is the linear factor describing the decrease of the capacity with every cycle, in milliampere-hours per cycle (mAh/cycle);

i is the cycle number (unitless);

C_{Initial} is the capacity of the first discharge ($i = 0$), in milliampere-hours (mAh).

c) Using the linear relationship developed in the previous step, calculate the number of cycles necessary to reach a battery capacity corresponding to 60 % of the initial capacity (C_{Initial}):

$$i_{60} = \frac{\left(C_{\text{Initial}} \times 0{,}6 - C_{\text{Initial}}\right)}{a}$$

where

i_{60} is the number of cycles necessary to reach a battery capacity corresponding to 60 % of C_{Initial} (unitless);

C_{Initial} is the capacity of the first discharge, in milliampere-hours (mAh);

a is the linear factor describing the decrease of the capacity with every cycle, in milliampere-hours per cycle (mAh/cycle).

d) Calculate the capacity loss using the formula listed in BB.4.2.5.

BB.4.8 Storage test for lithium-ion batteries

BB.4.8.1 General

The DUT's lithium-ion battery is stored for 30 days at 60 °C ± 5 °C at a state of charge of 50 %. It is recommended that the measured battery capacity after the storage procedure shall not be less than 80 % of the measured battery capacity before the storage procedure.

BB.4.8.2 Equipment requirements

- Battery analyser with the voltage, current, and capacity measurement tolerances specified in BB.4.1.2.
- Oven, environmental chamber, or other apparatus capable of maintaining temperature in the required range.

IECNORM.COM : Click to view the full PDF of IEC TS 62257-9-5:2016 RLV
Withdrawn

BB.4.8.3 Test prerequisites

The battery shall be recently received and fully charged. The battery capacity shall have been determined using the lithium-ion battery test (Annex K). The product shall have been cycled no more than two times and shall have been stored for no more than 1 week since undergoing the battery capacity test. The battery shall be taken out of the DUT. The storage shall be carried out at 60 °C ± 5 °C.

BB.4.8.4 Procedure

The following steps shall be followed, starting with a fully charged battery:

a) Discharge the battery at a rate of 0,2 I_t A for 2 h and 30 min. The battery is then at a state-of-charge of 50 %. The value of I_t shall be determined using the battery capacity measured in the battery test (Annex K).

b) Store the battery for 30 days at 60 °C ± 5 °C.

c) Determine the DUT's battery capacity according to the lithium-ion battery test, K.4.4 in the battery test annex (Annex K).

The following steps shall be followed, starting with a fully charged battery:

BB.4.8.5 Calculations

The calculations required for the storage test for lithium-ion batteries are identical to those for lead-acid batteries (BB.4.2.5).

BB.4.9 Cycling test for lithium iron phosphate batteries

BB.4.9.1 General

The DUT's lithium iron phosphate battery is cycled during one month on a battery analyser. The number of cycles necessary to reach 80 % of the initial capacity should not be lower than 300 for batteries composed of a more than one cell and 400 for batteries composed of a single cell, and the measured battery capacity after the cycling procedure should not be less than 80 % of the measured battery capacity before the cycling procedure.

BB.4.9.2 Equipment requirements

A battery analyser with the voltage, current, and capacity measurement tolerances specified in BB.4.1.2.

BB.4.9.3 Test prerequisites

The battery shall be recently received and fully discharged. The battery capacity shall have been determined using the lithium iron phosphate battery test (Annex K). The product shall have been cycled no more than two times and shall have been stored for no more than 1 week since undergoing the battery capacity test. The battery may be removed from the DUT. The test shall be carried out at 20 °C ± 5 °C.

BB.4.9.4 Procedure

The following steps shall be followed, starting with a fully discharged battery:

a) Charge and discharge the DUT's battery over 1 month using the following procedure. The value of I_t for the 50 cycles shall be determined using the battery capacity measured in the battery test (Annex K).

1) Charge the battery with a constant current at a rate of 1 I_t A until a voltage of 3,6 V/cell is reached followed by a constant-voltage charge at 3,6 V/cell for 1 h.

2) Discharge the battery at a rate of 0,2 I_t A until a voltage of 2,5 V/cell is reached. Calculate the battery capacity from the discharge data.

Withdrawn
IECNORM.COM : Click to view the full PDF of IEC TS 62257-9-5:2016 RLV

b) Determine the DUT's battery capacity according to the lithium iron phosphate battery test, K.4.5 in the battery test annex (Annex K).

BB.4.9.5 Calculations

The calculations required for the cycling test for lithium iron phosphate are identical to those for lithium-ion batteries (BB.4.7.5).

BB.4.10 Storage test for lithium iron phosphate batteries

BB.4.10.1 General

The DUT's lithium iron phosphate battery is stored for 30 days at 60 °C ± 5 °C at a state of charge of 50 %. The measured battery capacity after the storage procedure should not be less than 80 % of the measured battery capacity before the storage procedure.

BB.4.10.2 Equipment requirements

- Battery analyser with the voltage, current, and capacity measurement tolerances specified in BB.4.1.2.
- Oven, environmental chamber, or other apparatus capable of maintaining temperature in the required range.

BB.4.10.3 Test prerequisites

The battery shall be recently received and fully charged before undertaking the procedure. The battery capacity shall have been determined using the lithium iron phosphate battery test (Annex K). The battery shall be taken out of the DUT. The product shall have been cycled no more than two times and shall have been stored for no more than 1 week since the undergoing the battery capacity test. The storage shall be carried out at 60 °C ± 5 °C.

BB.4.10.4 Procedure

The following steps shall be followed starting with a fully charged battery:

a) Discharge the battery at a rate of 0,2 I_t A for 2 h and 30 min. The battery is then at a state-of-charge of 50 %. The value of I_t shall be determined using the battery capacity measured in the battery test.

b) Store the battery for 30 days at 60 °C ± 5 °C.

c) Determine the DUT's battery capacity according to the lithium iron phosphate battery test, K.4.5 in the battery test annex (Annex K).

BB.4.10.5 Calculations

The calculations required for the storage test for lithium-ion batteries are identical to those for lead-acid batteries (BB.4.2.5).

BB.5 Reporting

Report the following in the battery test report:

- Metadata:
  - Report name
  - Procedure(s) used
  - DUT manufacturer
  - DUT name
  - DUT model number

IECNORM.COM : Click to view the full PDF of IEC TS 62257-9-5:2016 RLV
Withdrawn

- Battery manufacturer, if available
- Battery name, if available
- Battery model number, if available
- Name of test laboratory
- Approving person
- Date of report approval

- Results for tested DUT aspects for samples 1 through n:
  - Capacity loss from cycling (%)
  - Capacity loss from storing (%)
  - Number of cycles necessary to reach 60 % of initial battery capacity (for DUTs with lithium batteries).
- Average of n sample results for each DUT aspect tested
- Coefficient of variation of n sample results for each DUT aspect tested (%)
- DUT's rating for aspects tested, if available
- Deviation of the average result from the DUT's rating for each aspect tested, if available (%)
- Comments:
  - Individual and overall comments, as necessary
- Figures:
  - For the cycling tests for lithium ion and lithium iron phosphate batteries, a single plot of the discharged capacity plotted against cycle number

BB.1 Background

The battery durability test aims to identify batteries unsuitable for the application in stand-alone lighting kits. The procedures are related to storage of the stand-alone lighting kits.

In general terms, the storage procedures use methods to accelerate the ageing mechanisms occurring during storage. This method enables the identification of batteries which age prematurely and are therefore unsuitable for use in stand-alone lighting kits.

BB.2 Test outcomes

The test outcomes of the battery durability test are listed in Table BB.1.

Table BB.1 – Battery durability test outcomes

Metric	Reporting units	Related aspects	Notes
Capacity loss from storage (δC)	Percentage (%)	4.2.5.3 Battery storage durability	

BB.3 Related tests

The battery durability test is related to the battery test (Annex K).

IECNORM.COM : Click to view the full PDF of IEC TS 62257-9-5:2016 RLV
Withdrawn

BB.4 Procedure

BB.4.1 Durability storage test for valve-regulated lead-acid batteries

BB.4.1.1 General

The DUT's valve-regulated lead-acid battery is stored for 360 h connected to a resistance corresponding to a current of 2 I_t A, which causes a deep discharge.

BB.4.1.2 Equipment requirements

The following equipment is required. Equipment shall meet the requirements in Table CC.2.

- Battery analyser.
- Wire cutters.
- Wire strippers.
- Soldering iron and solder.
- Heat-shrink tubing and heat gun, or electrical tape.
- Resistor with resistance corresponding to a current of 2 I_t A ± 10 % and a power rating that is greater than the maximum power dissipated during the test, as specified in IEC 61056-1:2012, 7.9.2.

BB.4.1.3 Test prerequisites

The DUT's battery shall be recently received and fully charged. The battery capacity shall have been determined using the valve-regulated lead-acid battery test (K.4.2). The product shall have been cycled no more than two times and shall have been stored for no more than 1 week since undergoing the battery capacity test. The battery shall be removed from the DUT.

BB.4.1.4 Procedure

Perform the charge acceptance after the deep discharge test from IEC 61056-1:2012, 7.9, with the following modifications:

- the requirements of IEC 61056-1:2012, 7.9.1 need not be met;
- capacity before and after storage shall be measured using the method defined in K.4.2;
- the battery shall be stored at an ambient temperature of 20 °C ± 5 K or 25 °C ± 5 K.

BB.4.1.5 Calculations

Determine the capacity loss using the following formula:

$$\delta C = \left(1 - \frac{C_A}{C_B}\right) \times 100\,\%$$

where

δC is the percent capacity loss experienced by the battery after the 30 days storage (%);

C_A is the battery capacity measured after the storage, in milliampere-hours (mAh);

C_B is the battery capacity measured before the storage, in milliampere-hours (mAh).

IECNORM.COM : Click to view the full PDF of IEC TS 62257-9-5:2016 RLV
Withdrawn

BB.4.2 Durability storage test for nickel-metal hydride batteries

BB.4.2.1 General

The DUT's nickel-metal hydride battery is stored for 30 days at 60 °C ± 5 °C connected to a resistance corresponding to a current of 0,2 I_t A, which causes a deep-discharge in the battery.

BB.4.2.2 Equipment requirements

The following equipment is required. Equipment shall meet the requirements in Table CC.2.

- Battery analyser.
- Wire cutters.
- Wire strippers.
- Soldering iron and solder.
- Heat-shrink tubing and heat gun, or electrical tape.
- Oven, environmental chamber, or other apparatus capable of maintaining temperature in the required range.
- Resistor with resistance corresponding to a current of 0,2 I_t A and a power rating that is greater than the maximum power dissipated during the test. The tolerance of the resistor shall be no more than 5 % and the nominal value of the resistor shall be within 20 % of the calculated resistance.

BB.4.2.3 Test prerequisites

The battery shall be recently received and fully charged. The battery capacity shall have been determined using the nickel-metal hydride battery test (Annex K). The product shall have been cycled no more than two times and shall have been stored for no more than 1 week since undergoing the battery capacity test. The battery shall be taken out of the DUT. The storage test shall be carried out at 60 °C ± 5 °C.

BB.4.2.4 Procedure

The following steps shall be followed, starting with a fully charged battery.

a) Discharge the battery at a rate of 0,2 I_t A until a voltage of 1,0 V/cell is reached. The value of I_t shall be determined using the battery capacity measured in the battery test (Annex K).

b) Connect across the battery terminals a resistor with resistance and power rating as specified in BB.4.2.2.

c) Store the battery for 30 days at 60 °C ± 5 °C.

d) Determine the DUT's battery capacity according to the nickel-metal hydride battery test (K.4.3).

BB.4.2.5 Calculations

The calculations required for the storage test for nickel-metal hydride batteries are identical to those for lead-acid batteries (BB.4.1.5).

BB.4.3 Durability storage test for lithium-ion batteries

BB.4.3.1 General

The DUT's lithium-ion battery is stored for 30 days at 60 °C ± 5 °C at a state of charge of 50 %. The storage test for lithium-ion batteries is an accelerated version of the charge (capacity) recovery after long term storage test from IEC 61960:2011, 7.5.

IECNORM.COM : Click to view the full PDF of IEC TS 62257-9-5:2016 RLV
Withdrawn

BB.4.3.2 Equipment requirements

The following equipment is required. Equipment shall meet the requirements in Table CC.2.

- Battery analyser.
- Oven, environmental chamber, or other apparatus capable of maintaining temperature in the required range.

BB.4.3.3 Test prerequisites

The battery shall be recently received and fully charged. The battery capacity shall have been determined using the lithium-ion battery test (Annex K). The product shall have been cycled no more than two times and shall have been stored for no more than 1 week since undergoing the battery capacity test. The battery shall be taken out of the DUT. The storage shall be carried out at 60 °C ± 5 °C.

BB.4.3.4 Procedure

The following steps shall be followed, starting with a fully charged battery.

a) Discharge the battery at a rate of 0,2 I_t A for 2 h and 30 min. The battery is then at a state-of-charge of 50 %. The value of I_t shall be determined using the battery capacity measured in the battery test (Annex K).

b) Store the battery for 30 days at 60 °C ± 5 °C.

c) Determine the DUT's battery capacity according to the lithium-ion battery test (K.4.4).

BB.4.3.5 Calculations

The calculations required for the storage test for lithium-ion batteries are identical to those for lead-acid batteries (BB.4.1.5).

BB.4.4 Durability storage test for lithium iron phosphate batteries

BB.4.4.1 General

The DUT's lithium iron phosphate battery is stored for 30 days at 60 °C ± 5 °C at a state of charge of 50 %. The storage test for lithium iron phosphate batteries is an accelerated version of the charge (capacity) recovery after long term storage test from IEC 61960:2011, 7.5.

BB.4.4.2 Equipment requirements

The following equipment is required. Equipment shall meet the requirements in Table CC.2.

- Battery analyser.
- Oven, environmental chamber, or other apparatus capable of maintaining temperature in the required range.

BB.4.4.3 Test prerequisites

The battery shall be recently received and fully charged before undertaking the procedure. The battery capacity shall have been determined using the lithium iron phosphate battery test (Annex K). The battery shall be taken out of the DUT. The product shall have been cycled no more than two times and shall have been stored for no more than 1 week since the undergoing the battery capacity test. The storage shall be carried out at 60 °C ± 5 °C.

BB.4.4.4 Procedure

The following steps shall be followed, starting with a fully charged battery.

IECNORM.COM : Click to view the full PDF of IEC TS 62257-9-5:2016 RLV

a) Discharge the battery at a rate of 0,2 I_t A for 2,5 h. The battery is then at a state-of-charge of 50 %. The value of I_t shall be determined using the battery capacity measured in the battery test.

b) Store the battery for 30 days at 60 °C ± 5 °C.

c) Determine the DUT's battery capacity according to the lithium iron phosphate battery test (K.4.5).

BB.4.4.5 Calculations

The calculations required for the storage test for lithium-ion batteries are identical to those for lead-acid batteries (BB.4.1.5).

BB.5 Reporting

Report the following in the battery test report.

- Metadata:
  - report name;
  - procedure(s) used;
  - DUT manufacturer;
  - DUT name;
  - DUT model number;
  - battery manufacturer, if available;
  - battery name, if available;
  - battery model number, if available;
  - name of test laboratory;
  - approving person;
  - date of report approval.
- Results for tested DUT aspects for samples 1 through n:
  - capacity loss from storage (%).
- Average of n sample results for each DUT aspect tested.
- Coefficient of variation of n sample results for each DUT aspect tested (%).
- DUT's rating for aspects tested, if available.
- Deviation of the average result from the DUT's rating for each aspect tested, if available (%).
- Comments:
  - individual and overall comments, as necessary.

IECNORM.COM : Click to view the full PDF of IEC TS 62257-9-5:2016 RLV
Withdrawn

Annex CC
(normative)

Equipment requirements

Annex CC gives requirements and recommendations for the equipment needed for the test methods described in this part of IEC 62257 (Table CC.2). Many pieces of equipment can be used for multiple tests; the right side of the table shows which test methods require each piece of equipment. The symbols used in these columns of Table CC.2 are defined in Table CC.1.

Table CC.1 – Symbols used in test method column of Table CC.2

Symbol	Meaning
No symbol	Equipment is not used for this test.
•	Equipment is required for this test regardless of the test laboratory class.
○	Equipment is optional for this test
A	Equipment is required for this test for test laboratories of class A.
B	Equipment is an acceptable alternative to the equipment labelled **A** for test laboratories of class B.

IECNORM.COM : Click to view the full PDF of IEC TS 62257-9-5:2016 RLV
Withdrawn

Table CC.2 – Specifications for all required test equipment *(1 of 8)*

Equipment	Recommendations	Requirements	Test method															
			Visual screening	Sample preparation	Photovoltaic module IV characteristics test	Light output test	Light distribution test	Battery test	Full battery run time	Full discharge preparation	Solar charge efficiency test	Grid charge test	Mechanical charge test	Charge controller behaviour test	Lumen maintenance test	Physical and water ingress protection test	Mechanical durability test	Battery durability
Computer	Depends on equipment that needs to be connected; typically good to have multiple RS-232 DB9 (serial) ports and USB ports for test equipment I/O. Test equipment often requires Windows.	Depends on equipment	•	•	•	•	•	•	•	•	•	•	•	•	•	•	•	•
Callipers and/or ruler	--	--	•															
Balance (scale)	--	≤ 0,1 g resolution; ≤ 1 % accuracy	•															
Bright task light with good colour rendering	≥ 700 lux and ≥ 85 CRI	--	•															
Camera	--	--	•													•	•	
DC voltmeter or multimeter	--	< 0,5 % accuracy	•		B	B	B							•	•			
Wire stripper	--	--		•														•
Wire cutter	--	--		•														•
Soldering iron and solder	--	--		•														•
Heat-shrink tubing and heat gun	--	--		•														•
Screwdrivers	--	--		•														
Power drill with drill bits	--	--		•														

Withdrawn
IECNORM.COM : Click to view the full PDF of IEC TS 62257-9-5:2016 RLV

Table CC.2 *(2 of 8)*

Equipment	Recommendations	Requirements	Test method																
			Visual screening	Sample preparation	Photovoltaic module IV characteristics test	Light output test	Light distribution test	Battery test	Full battery run time	Full discharge preparation	Solar charge efficiency test	Grid charge test	Mechanical charge test	Charge controller behaviour test	Lumen maintenance test	Physical and water ingress protection test	Mechanical durability test	Battery durability
Wire	4 different colours (i.e. red, black, white, green)	insulated copper wire 0,75 mm^2 or thicker		•														
Connectors	--	--		○														
Solar simulator	--	Meets the requirements of IEC 60904-1			A													
PV reference cell	Calibration should be traceable to an ISO 17025 accredited laboratory.	Matched to DUT spectral response (see Q.4.2.1) unless spectral mismatch correction is used			A													
Indoor I-V curve analyser		Current range: up to 2 A; Voltage range: up to 60 V; < 0,5 % accuracy for modules 0,3 W to 15 W			A													
Outdoor I-V curve analyser	--	Same as indoor I-V curve analyser			B													
Fast-response pyranometer	Silicon PV- or photodiode-based	< 5 % accuracy Response time ≤ 1 s			B													
Surface-mounted thermocouple(s)	--	< 2 °C precision			B						○	○		○				
Thermocouple reader or other suitable temperature measurement devices with surface-mountable sensors	--	< 2 °C precision			B						○	○		○				

IECNORM.COM : Click to view the full PDF of IEC TS 62257-9-5:2016 RLV
Withdrawn

Table CC.2 *(3 of 8)*

Equipment	Recommendations	Requirements	Test method															
			Visual screening	Sample preparation	Photovoltaic module IV characteristics test	Light output test	Light distribution test	Battery test	Full battery run time	Full discharge preparation	Solar charge efficiency test	Grid charge test	Mechanical charge test	Charge controller behaviour test	Lumen maintenance test	Physical and water ingress protection test	Mechanical durability test	Battery durability
Integrating sphere	--	≥ 1 m diameter with auxiliary lamp; set of 3 calibrated lamp standards; spectroradiometer detector with range containing 380 nm to 780 nm				A			o						o			
Multi-plane test apparatus	Black matte paint minimizes surface reflectance. An array of clamp types is useful to hold DUTs in place.	--				B	o											
Lighting distribution grid testing surface	Black matte paint minimizes surface reflectance. An array of clamp types is useful to hold DUTs in place.	--					B											
Turntable ("rotary disk")	--	--					o											

Withdrawn
IECNORM.COM : Click to view the full PDF of IEC TS 62257-9-5:2016 RLV

Table CC.2 *(4 of 8)*

Equipment	Recommendations	Requirements	Test method															
			Visual screening	Sample preparation	Photovoltaic module IV characteristics test	Light output test	Light distribution test	Battery test	Full battery run time	Full discharge preparation	Solar charge efficiency test	Grid charge test	Mechanical charge test	Charge controller behaviour test	Lumen maintenance test	Physical and water ingress protection test	Mechanical durability test	Battery durability
Illuminance meter	--	Cosine-corrected; ≤ 0,1 lux precision; V(λ) corrected				B	B											
Illuminance meter with data-logging capability	--	Cosine-corrected; ≤ 0,1 lux precision; V(λ) corrected; ≥ 20 000 data points stored at ≤ 1 second time resolution							•									
DC power supply	Be sure the power supply can supply high enough current and voltage values for the DUTs tested.	≤ 0,01 V voltage resolution; ≤ 0,001 A current resolution; ≤ 0,2 % load regulation				•	•							○				
DC power supply, with programmable capability	Be sure the power supply can supply high enough current and voltage values for the DUTs tested.	≤ 0,01 V voltage resolution; ≤ 0,001 A current resolution; ≤ 0,2 % load regulation									•							

IECNORM.COM : Click to view the full PDF of IEC TS 62257-9-5:2016 RLV
Withdrawn

Table CC.2 *(5 of 8)*

Equipment	Recommendations	Requirements	Test method															
			Visual screening	Sample preparation	Photovoltaic module IV characteristics test	Light output test	Light distribution test	Battery test	Full battery run time	Full discharge preparation	Solar charge efficiency test	Grid charge test	Mechanical charge test	Charge controller behaviour test	Lumen maintenance test	Physical and water ingress protection test	Mechanical durability test	Battery durability
Solar array simulator	--	≤ 5 % current accuracy at a current equal to half the maximum-power current[a]									○			○				
Series and parallel resistors	Use variable resistors	resistance within 1 % of calculated value									●			○				
Resistance meter or multimeter	--	≤ 1 % accuracy									●							
DC power supply	Be sure the power supply can supply high enough current and voltage values for the DUTs tested.	≤ 0,01 V voltage resolution; ≤ 0,001 A current resolution; ≤ 3 % load regulation													●			

Withdrawn
IECNORM.COM : Click to view the full PDF of IEC TS 62257-9-5:2016 RLV

Table CC.2 *(6 of 8)*

Equipment	Recommendations	Requirements	Test method														
			Visual screening	Sample preparation	Photovoltaic module IV characteristics test	Light output test	Light distribution test	Battery test	Full battery run time	Full discharge preparation	Solar charge efficiency test	Grid charge test	Mechanical charge test	Charge controller behaviour test	Lumen maintenance test	Physical and water ingress protection test	Mechanical durability test	Battery durability
DC ammeter	Current-sensing shunt resistor	≤ 1 % accuracy													•			
DC ammeter	--	≤ 1 % accuracy				•	•											
DC ammeter or multimeter	--	≤ 0,01 mA precision												•				
Stopwatch	--	≤ 1 second resolution											•				•	
Rigid probes	--	1 mm diameter and 12,5 mm diameter														•		
Capacitor filter	Capacitor filter should be soldered on perforated prototyping board or equivalent, or on a printed circuit board (PCB).	1 µF, 10 µF, and 100 µF (±20 %) capacitors in parallel (ceramic chip or tantalum)				•									•			
Battery analyser	--	≤ 1 % accuracy					•	•	•	○								
Low-voltage disconnect device	--	≤ 2,5 % accuracy								○								
Timer disconnect device	Combine digital timer with relay	≤ 2 min precision								○		•						

IECNORM.COM : Click to view the full PDF of IEC TS 62257-9-5:2016 RLV
Withdrawn

Table CC.2 *(7 of 8)*

Equipment	Recommendations	Requirements	Test method															
			Visual screening	Sample preparation	Photovoltaic module IV characteristics test	Light output test	Light distribution test	Battery test	Full battery run time	Full discharge preparation	Solar charge efficiency test	Grid charge test	Mechanical charge test	Charge controller behaviour test	Lumen maintenance test	Physical and water ingress protection test	Mechanical durability test	Battery durability
Appropriate optical cavity or dark room/closet	Photometer box	The magnitude of stray light's influence on the absolute light output measurements shall be no greater than 0,5 % of the minimum light output magnitude being measured during the test.							•						•			
Voltage data logger	--	≤ 1 mV resolution; ≤ 2 mV ± 2,5 % accuracy ≥ 20 000 data points stored at ≤ 1 min time resolution							•		•	•	•	•				
Current data logger	Combine voltage data logger with current transducer or current shunt	≤ 1 mA resolution; ≤ 3 % accuracy ≥ 20 000 data points stored at ≤ 1 min time resolution							•		•	•	•	•				
Overcharge disconnect device	Temperature and/or voltage sensing; operating voltage range sufficient for highest expected battery voltage (typically < 20 V)	0,01 V resolution									•	•		•				

IECNORM.COM : Click to view the full PDF of IEC TS 62257-9-5:2016 RLV
Withdrawn

Table CC.2 *(8 of 8)*

Equipment	Recommendations	Requirements	Test method																
			Visual screening	Sample preparation	Photovoltaic module IV characteristics test	Light output test	Light distribution test	Battery test	Full battery run time	Full discharge preparation	Solar charge efficiency test	Grid charge test	Mechanical charge test	Charge controller behaviour test	Lumen maintenance test	Physical and water ingress protection test	Mechanical durability test	Battery durability
Controlled water source	--	rotating head ±60°														•		
Tape measure or ruler	--	≥ 1 m															•	
Weight	--	2 kg															•	
Protractor	--	--															•	
Clamp	--	--															•	
45 degree angle	Wooden block	--															•	
Resistor	--	≤ 5 % tolerance; size and power rating dependent on DUT's battery																•
Oven or environmental chamber	--	Able to maintain 60 °C ± 5 °C and 30 °C ± 5 °C															•	•

[a] Some commercial solar array simulators are designed for large modules and are not accurate at the low currents typically seen with stand-alone lighting kits. For example, an SAS with a rated accuracy of ±(0,2 % + 20 mA) would not necessarily be appropriate to simulate a module with a maximum power point current of 100 mA. If the manufacturer-provided measurement uncertainty is insufficient to meet this requirement, the instrument may be used if the simulated I-V curve is measured to verify that the current values are within 5 % of the actual I-V curve at all points where the actual current is greater than half the maximum power point current. This test shall be performed each time the SAS is set up to test a new DUT.

Withdrawn
IECNORM.COM : Click to view the full PDF of IEC TS 62257-9-5:2016 RLV

Annex DD
(normative)

Protection tests

DD.1 Background

Annex DD contains test methods to assess the robustness of the stand-alone lighting kit to faults, including incorrect wiring and a disconnected battery. To meet the requirements of these tests, the product shall withstand the fault condition without being damaged or presenting a safety hazard.

DD.2 Test outcomes

The test outcomes of the protection tests are listed in Table DD.1.

Table DD.1 – Protection test outcomes

Metric	Reporting units	Related aspects	Remarks
Presence of sufficient PV overvoltage protection	pass/fail	4.2.7.3 Circuit and overload protection	Overall pass/fail result for entire DUT
PV overvoltage protection test damage	Yes/no, description	4.2.7.3 Circuit and overload protection	One result for every receptacle or integrated or permanently attached appliance
PV overvoltage protection test safety hazard	Yes/no, description	4.2.7.3 Circuit and overload protection	One result for every receptacle or integrated or permanently attached appliance
PV overvoltage protection test receptacle allowable voltage limit	Voltage (V)	4.2.7.3 Circuit and overload protection	One result for every receptacle
PV overvoltage protection test receptacle voltage	Voltage (V)	4.2.7.3 Circuit and overload protection	One result for every receptacle
PV overvoltage protection fault indication	Yes/no, description	4.2.7.3 Circuit and overload protection	Single result for entire DUT
Presence of sufficient miswiring protection	pass/fail	4.2.7.3 Circuit and overload protection	Overall pass/fail result for entire DUT
Miswiring protection test damage	Yes/no, description	4.2.7.3 Circuit and overload protection	One result for every tested configuration
Miswiring protection test safety hazard	Yes/no, description	4.2.7.3 Circuit and overload protection	One result for every tested configuration
Miswiring protection test fault indication	Yes/no, description	4.2.7.3 Circuit and overload protection	One result for every tested configuration

DD.3 Related tests

The protection tests use results from the photovoltaic module I-V performance test (Annex Q). The maximum sustained current calculated in the output overload protection test (DD.4.3) is used in the assessment of DC ports (Annex EE).

IECNORM.COM : Click to view the full PDF of IEC TS 62257-9-5:2016 RLV
Withdrawn

DD.4 Procedure

DD.4.1 PV overvoltage protection test

DD.4.1.1 General

The open-circuit voltage of a PV module can be significantly higher than the normal operating voltage of the system when a battery is connected. If not properly regulated, this has the potential to cause damage if applied to system components. Additionally, if a port voltage exceeds a certain value above the nominal design voltage for that port, appliances connected to that port can be damaged. This voltage is defined here as the allowable port voltage limit.

The PV overvoltage protection test assesses whether the DUT

- can withstand a PV overvoltage condition,
- provides sufficient protection to appliances if the system battery is disconnected, and
- provides a mechanism for alerting the user to the fault condition.

The PV overvoltage protection test need not be conducted if both of the following are true.

- The battery cannot be isolated from the system by the consumer or installing technician without opening an enclosure that is not intended to be opened during installation, operation, or maintenance.
- The battery is connected to the system in such a way that it is unlikely to become disconnected during shipping, installation, or normal operation and maintenance. (The battery may be replaceable by a technician using ordinary tools, as long as the connector or other means of disconnecting the battery is not accessible to the consumer during ordinary use.)

NOTE These conditions are expected to apply to many DUTs; therefore, it is expected that the PV overvoltage protection test will be performed infrequently.

DD.4.1.2 Equipment requirements

The following equipment is required. Equipment shall meet the requirements in Table CC.2.

- DC power supply.
- DC voltmeter or multimeter.

DD.4.1.3 Test prerequisites

The visual screening (Annex F) and photovoltaic module I-V performance test (Annex Q) shall be performed before performing the PV overvoltage protection test.

DD.4.1.4 Procedure

Perform the following steps.

a) Determine the allowable port voltage limit for each port, using the following procedure.

   1) If the nominal voltage of the port (from Annex EE) is listed in Table DD.2, use the allowable port voltage limit from Table DD.2.

   2) If the nominal voltage of the receptacle is not listed in Table DD.2, determine an appropriate voltage limit using any available information about the loads intended or expected to be connected to the receptacle, taking into account any existing conventions or standards as well as any markings on or documentation provided with the product.

IECNORM.COM : Click to view the full PDF of IEC TS 62257-9-5:2016 RLV

Table DD.2 – Allowable port voltage limit by nominal voltage

Nominal port voltage V	Allowable port voltage limit V
5	5,25
6	7,90
12	15,8

b) Calculate the maximum open-circuit voltage of the PV module using the following formula:

$$V_{oc,max} = 2 \times V_{oc,STC} - V_{oc,TMOT}$$

where

$V_{oc,max}$ is the maximum open-circuit voltage for the PV overvoltage protection test, in volts (V);

$V_{oc,STC}$ is the measured open-circuit voltage at STC, in volts (V);

$V_{oc,TMOT}$ is the measured open-circuit voltage at TMOT, in volts (V).

NOTE This is an estimate of the open-circuit voltage at 0 °C.

c) Disconnect all removable appliances from the DUT.

d) Disconnect the battery from the DUT.

e) Connect a DC power supply to the PV input connector of the DUT.

f) Apply a voltage equal to the maximum open-circuit voltage calculated in b). Set the current limit to the short-circuit current of the PV module measured at STC.

g) If the DUT provides an indication of the fault condition (for example, a warning light, error code, or audible alarm), note the type of indication.

h) Measure and record the voltage at each port. Before measuring, perform any actions necessary to turn on that port. (For example, if a DC socket is controlled by a switch, turn the switch on.) If the DUT has multiple identical ports, it is only necessary to test one port from each set of identical ports.

i) Turn on any power switches for any permanently connected or integrated appliances (for example, an internal radio or permanently-wired light).

j) Allow the permanently connected or integrated appliances to remain turned on with the power supply applied for 20 min, regardless of whether the appliance functions, unless a safety hazard develops (e.g., smoke or a burning smell). Record any abnormal operation.

k) Turn off the power supply.

l) Reconnect the battery to the DUT.

m) Test the functionality of the DUT. If the DUT no longer functions:

1) If the problem can be identified and repaired by following instructions in the user documentation (e.g. replacing a blown fuse or resetting a tripped circuit breaker), using no tools except a screwdriver used to remove and insert screws, without creating a safety hazard, repair the fault. Only spare parts included with DUT may be used. (For example, if a fuse is blown, and the manufacturer did not supply replacement fuses, the DUT fails the test.) If the DUT is functional after the repair, and the repair can be conducted without exposing the person conducting the repair to a safety hazard, the DUT does not fail the test.

2) If the problem can be easily identified and repaired by the test laboratory, but requires steps not documented in the user documentation, tools other than a screwdriver used to remove and insert screws, or spare parts not included with the DUT, the DUT fails the test. However, the test laboratory may, at its discretion, repair the fault and continue the test.

3) In the test report, describe any repairs made.

IECNORM.COM : Click to view the full PDF of IEC TS 62257-9-5:2016 RLV
Withdrawn

n) Record whether the DUT remains functional at the end of the test, whether any damage occurred, and whether any user safety hazard is present. Describe any failures and take photographs of any visible damage or safety hazards.

o) The DUT is considered to have sufficient protection from PV overvoltage if all of the following are true.

- All features of the DUT, including permanently connected or integrated appliances, remain functional at the end of the test.
- No safety hazard developed during or after the test.
- The voltage measured at each port did not exceed the allowable voltage limit calculated in step a) above.

The DUT is not required to function normally during the test, although any abnormal operation should be noted in the test report. The DUT is not required to provide indication of the fault condition (for example, a warning light, error code, or audible alarm), but any such indication should be noted and described.

DD.4.2 Miswiring protection test

DD.4.2.1 General

This test assesses whether the DUT is protected against improper wiring and system component connections. In many cases, it is infeasible to test every possible combination of incorrect connections, so this procedure attempts to identify and test configurations that are likely to occur during installation, operation, and routine maintenance.

DD.4.2.2 Test prerequisites

The visual screening (Annex F) and photovoltaic module I-V performance test (Annex Q) shall be performed before performing the miswiring protection test.

DD.4.2.3 Equipment requirements

The miswiring protection test requires a DC power supply meeting the requirements in Table CC.2.

DD.4.2.4 Procedure

a) Identify the connectors subject to the miswiring protection test. A connector shall be tested if both of the following are true.

- The connector is accessible to the user or installer during normal installation, operation, and routine maintenance. (A compartment or enclosure is considered "accessible" if it can be opened without the use of any tools, or if it is opened at any time during the normal processes of installation, operation, or routine maintenance.)
- The connector can be inserted, assembled, or mated incorrectly (for example, backwards) without excessive force or modification, and/or the connector can be inserted into or mated with a receptacle or connector other than those with which it is intended to be used.

Examples of situations requiring testing:

EXAMPLE 1 The PV module and lighting appliances have the same type of plug, so one can be inserted into the socket intended for another.

EXAMPLE 2 The battery, mounted in a user-accessible enclosure (as defined above), is connected to the charge controller using quick-disconnect lugs, and the positive and negative leads are physically interchangeable.

Examples of situations not requiring testing:

EXAMPLE 3 The battery is mounted in an enclosure that is not intended to be accessed by the user or installer. In this case, the battery connector does not require testing.

IECNORM.COM : Click to view the full PDF of IEC TS 62257-9-5:2016 RLV
Withdrawn

EXAMPLE 4 The kit includes several different appliances with USB plugs and four USB sockets intended for connecting appliances. Although a given appliance could be connected to any of the four sockets, this would not be an incorrect connection, so it does not require testing.

EXAMPLE 5 The kit includes a non-polarized connector that is designed to function correctly when connected in either direction. (For example, a non-polarized AC plug or a plug with a symmetrical arrangement of contacts.)

b) Identify each incorrect configuration to be tested, using the following rules.

- In these rules, a pair is defined as a positive and negative lead from the same circuit.
- The following configurations shall be tested.
  - The conductors making up a single pair are swapped (e.g. the battery is connected in reverse polarity).
  - A single connector or pair of conductors is matched with the wrong mating connector, and all other connections are made correctly (e.g. the PV module is connected to an appliance receptacle).
  - Two connectors or pairs of conductors are swapped (e.g. the battery is connected to the PV input and the PV module is connected to the battery input).
  - A single connector is inserted in the wrong orientation (e.g. the battery connector is inserted backwards)
- Combinations of the above situations (e.g. both battery and PV module are connected in reverse polarity) need not be tested.
- If multiple connectors are functionally identical, only one connector is required to be tested. For example, if the DUT includes four identical sockets for connecting appliances, and a PV connector that fits in the appliance sockets, the PV connector shall be tested in one of the four appliance sockets. Testing of the other three sockets is optional.
- All required configurations shall be tested prior to testing any optional configurations, since the test can be destructive.
- In addition to the configurations tested above, the test laboratory should test any additional configurations if, in the tester's judgment, the configuration is likely to occur during installation, use, or routine maintenance.
- If the testing laboratory determines that a configuration will result in a safety hazard to property or personnel, the laboratory should not test that configuration. If this is a required configuration, the DUT fails the test. (For example, if reversing a connector would result in a short-circuit path across the battery with no overcurrent protection, the configuration should not be tested.)
- It is not necessary to test configurations in which excessive force or modifications to the DUT would be required to make connections, provided that no electrical contact occurs unless excessive force is applied or modifications are performed. (For example, if the battery and PV module use connectors of different sizes or shapes, a configuration in which these connectors are swapped need not be tested.) "Excessive force" is defined as sufficient force to physically damage the DUT in a way that would be apparent to a typical user. If a connector can be forced into a socket without causing obvious damage, even if non-obvious damage (e.g. bent pins or contacts) occurs, this configuration shall be tested.

c) Connect the product's PV input to any of the apparatus allowed in the charge controller behaviour test (Annex S) (i.e. a power supply with a series resistor and, optionally, a parallel resistor). Configure the apparatus as in the charge controller behaviour test. Verify that the DUT functions correctly.

d) For each incorrect wiring configuration identified in b), perform the following steps:

1) Configure the DUT according to the incorrect wiring configuration under test. (If necessary for safety, disconnect the battery and/or PV input before making wiring configuration changes.)

2) Reconnect and turn on the power supply simulating the PV module.

IECNORM.COM : Click to view the full PDF of IEC TS 62257-9-5:2016 RLV
Withdrawn

3) Allow the DUT to remain connected for 20 min, unless a safety hazard develops (e.g., smoke or a burning smell). The DUT is not required to function correctly while configured incorrectly.

4) If the DUT provides an indication of the fault condition (for example, a warning light, error code, or audible alarm), note the type of indication.

5) Restore the DUT to the correct wiring configuration. (If necessary for safety, disconnect the battery and/or PV input before making wiring configuration changes.)

6) If a safety hazard develops, disconnect the battery and PV input from the DUT and discontinue the test.

7) Test the functionality of the DUT. If the DUT no longer functions:

   i) If the problem can be identified and repaired by following instructions in the user documentation (e.g., replacing a blown fuse or resetting a tripped circuit breaker), using no tools except a screwdriver used to remove and insert screws, without creating a safety hazard, repair the fault. Only spare parts included with DUT may be used. (For example, if a fuse is blown, and the manufacturer did not supply replacement fuses, the DUT fails the test.) If the DUT is functional after the repair, and the repair can be conducted without exposing the person conducting the repair to a safety hazard, the DUT does not fail the test.

   ii) If the problem can be easily identified and repaired by the test laboratory, but requires steps not documented in the user documentation, tools other than a screwdriver used to remove and insert screws, or spare parts not included with the DUT, the DUT fails the test. However, the test laboratory may, at its discretion, repair the fault and continue the test. (For example, if a replacement fuse is required, the test laboratory may replace the fuse, continue the test, and state in the report that the DUT failed the test, but would have passed the test had spare fuses been included).

   iii) In the test report, describe any repairs made.

8) Record whether the DUT remains functional at the end of the test, whether any damage occurred, and whether any user safety hazard is present. Describe any failures and take photographs of any visible damage or safety hazards.

The DUT passes the miswiring protection test if it remains functional after the final incorrect configuration is tested and no safety hazards developed during the test. The DUT is not required to function normally during the test, although any abnormal operation should be noted in the test report. The DUT is not required to provide indication of the fault condition (for example, a warning light, error code, or audible alarm), but any such indication should be noted and described.

DD.4.3 Output overload protection test

DD.4.3.1 General

This test assesses whether the DUT is protected against excessive load or short circuits applied to the appliance ports.

NOTE This test can be conducted using the same apparatus as the assessment of DC ports (Annex EE).

DD.4.3.2 Test prerequisites

The visual screening (Annex F) and photovoltaic module I-V performance test (Annex Q) shall be performed before performing the output overload protection test.

DD.4.3.3 Equipment requirements

The following equipment is required. Equipment shall meet the requirements in Table CC.2.

- DC power supply.
- Two DC ammeters or multimeters.

IECNORM.COM : Click to view the full PDF of IEC TS 62257-9-5:2016 RLV
Withdrawn

- Two DC voltmeters or multimeters.

In some cases. it can be necessary to use multiple laboratory power supplies in parallel to achieve the required current. Unless otherwise specified by the power supply manufacturer, a diode should be used at the output of each power supply to prevent backfeeding. If the power supplies do not include current-sharing functionality, set one power supply to constant-voltage mode to control the voltage and set the remaining power supplies to constant-current mode with a voltage limit not exceeding the battery's overcharge protection voltage threshold, as measured in the charge controller behaviour test (Annex S).

The currents required in this test can exceed the maximum range of many multimeters. In this case, a current transducer or current sense resistor and voltmeter may be used instead of an ammeter or multimeter. The voltage should be measured at the DUT to compensate for the voltage drop across the ammeter or current sense resistor.

If an electronic load is used, and the electronic load contains current and voltage measurement functionality that meets the requirements for DC ammeters and voltmeters in Table CC.2 after accounting for any voltage drop between the port and the load, this functionality may be used instead of an ammeter and/or voltmeter at the port.

The electronic load shall be galvanically isolated from the power supply if this is necessary in order to avoid altering the behaviour of the DUT.

DD.4.3.4 Procedure

Perform the following steps for each port under test. If the DUT has multiple identical ports, it is only necessary to test one port from each set of identical ports. In the following procedure, the term "overload protection device" refers to a fuse, circuit breaker, PTC device, other overcurrent protection device, thermal fuse, thermal switch, or other thermal protection device).

a) Determine the maximum testing current for each port, using the following rules.
   1) If the manufacturer supplied a maximum current rating or overcurrent protection limit for the port, the maximum testing current is 125 % of the manufacturer-provided value. If more than one value was given by the manufacturer (for example, a nominal current value and an overcurrent protection limit), use the largest value.
   2) If a current rating or overcurrent protection limit for the port is given in the user documentation or product packaging or marked on the product or on an internal component (such as a fuse or circuit breaker), the maximum testing current is 125 % of the value given in the documentation or marked on the product or component.
   3) If no rating was given and no markings can be found, calculate the highest power consumption that could be achieved using a combination of the included and advertised appliances that can be powered simultaneously using the port and all identical ports, plus any splitters or similar components that are included or advertised for use with the port. Use Annex HH to determine the power consumption of appliances that are not included in the kit. Divide the total power consumption by the nominal port voltage (Annex EE) and multiply by 1,25 to calculate the maximum testing current.
   4) For USB or 5 V mobile-phone charging receptacles, the maximum testing current shall not be less than 1,875 A.
b) Use a laboratory power supply to power the DUT power control unit according to Annex H. Set the power supply to the DUT standard operating voltage as described in H.5.1. Measure the voltage as close to the DUT as possible and adjust the power supply to compensate for voltage drop in the wires, ammeter, and paralleling diodes if used.
c) Turn on the power supply and verify that the DUT is functional.

IECNORM.COM : Click to view the full PDF of IEC TS 62257-9-5:2016 RLV
Withdrawn

d) Connect an adjustable load to the port under test. The load should have a current and power ratings sufficient to achieve the maximum testing current at the port's output voltage.

e) Adjust the load in order to find the largest current, less than or equal to the maximum testing current, that does not result in the trigger of an overload protection device after 20 min of operation. This is the maximum sustained current. It is only necessary to test multiples of 5 % of the maximum testing current. The test laboratory may use any algorithm to identify the maximum sustained current, including the following.

- Starting at a low value and slowly increasing the current until the overload protection device is triggered. This method can be preferable if the overload protection device is a fuse that needs to be replaced after each operation, or if the overload protection device requires a long cool-down period to reset.
- Starting at a high value and slowly decreasing the current until the overload protection device does not trigger. This method can give faster results but could result in excessive operation of the overload protection device or could damage the DUT.
- Performing a binary search, as follows:
  1) Define I_L to be equal to zero and I_H to be equal to the maximum testing current.
  2) Calculate the test current I_{test}, as follows:

$$I_{test} = \frac{I_L + I_H}{2}$$

  3) Round the value of I_{test} to the nearest multiple of 5 % of the maximum current.
  4) Apply a current of I_{test} for 20 min.
  5) If an overcurrent protection device operates, set I_H equal to I_{test}. Otherwise, set I_L equal to I_{test}.
  6) If the difference between I_H and I_L is less than 5 % of the maximum current, stop the procedure. Otherwise, go to step 2.
- Using a combination of these methods. For example, one or two steps of a binary search could be performed to get a coarse estimate of the maximum sustained current, followed by a slow ramp-up to find the precise value without excessive operation of the overload protection device.

For some types of overload protection, it is necessary to allow the DUT to cool before repeating the test. When possible, the test laboratory should avoid unnecessary operation of the overload protection device, especially if the type of device is not known.

f) If an overload protection device operates, perform the following steps:

1) Record the type of overload protection device, the tools required to reset it, and whether the user documentation (including the user's manual and any labels on the product) contains sufficient instructions to carry out the procedure. If the overload protection device is a non-resettable fuse, record whether the kit includes spare fuses.
2) Without removing the load or the power supply connected to the DUT's battery input, connect the product's PV input to a DC power supply. Do not reset the overload protection device.
3) Apply a voltage equal to the maximum open-circuit voltage calculated in DD.4.1.4 step b). Set the current limit to the short-circuit current of the PV module measured at STC.
4) If the PV overvoltage protection test is not required for this product (see DD.4.1.1), perform the following additional steps. If the PV overvoltage test has been performed or will be performed, the following steps are not required.
   i) Disconnect the load from the port.
   ii) Measure the voltage at the port.
   iii) If the PV overvoltage protection test was not performed, calculate the allowable port voltage limit according to DD.4.1.4 step a).

IECNORM.COM : Click to view the full PDF of IEC TS 62257-9-5:2016 RLV
Withdrawn

iv) Compare the voltage measured at the port in step 4) to the allowable port voltage limit from DD.4.1.4 step a). If the measured voltage exceeds the allowable port voltage limit, the DUT does not provide sufficient protection against PV overvoltage.

v) Repeat steps ii) to iv) for each port on the DUT.

g) If no overload protection device operates when the device is operated at the maximum testing current for 20 min, no overload protection is detected and the maximum sustained current cannot be determined. The test laboratory may consult with the DUT manufacturer to determine whether a higher value for the maximum sustained current should be used; if so, the test should be repeated.

h) If the port driver circuitry limits the current such that even when the load resistance is decreased, the current remains below the maximum testing current, the maximum sustained current is the maximum current measured during the test.

i) Note the functionality of the DUT after operating at the maximum sustained current for 20 min.

j) Record the following.

1) Record whether an overload protection device operated during the test.

2) Record whether the DUT remains functional after the test is completed. Describe any abnormal operation during or after the test. (If abnormal operation occurred during the test, note whether the behaviour returned to normal when the overload condition was removed.)

3) Record whether the DUT was damaged during the test. Describe and photograph any damage.

4) Record whether any safety hazards developed during the test. Describe and document with photographs where applicable.

5) If the DUT provides indication of the overload condition (for example, a warning light, error code, or audible alarm), describe the indication.

6) Record whether the DUT provides adequate protection against PV overvoltage, if applicable.

The DUT is considered to have adequate output overload protection if all of the following are true.

- The maximum sustained current is less than or equal to the maximum testing current.
- The DUT remains functional after the test. (The DUT is not required to operate normally while the overload condition exists, but shall return to normal operation after the overload is removed.)
- No damage occurred and no safety hazards developed when the DUT was operated at the maximum sustained current for 20 min.

DD.5 Reporting

Report the following in the protection test report.

- Metadata:
  - report name;
  - procedure(s) used;
  - DUT manufacturer;
  - DUT name;
  - DUT model number;
  - DUT setting;
  - DUT orientation;

IECNORM.COM : Click to view the full PDF of IEC TS 62257-9-5:2016 RLV
Withdrawn

  - test room temperature (°C);
  - name of test laboratory;
  - approving person;
  - date of report approval.
- Results for tested DUT aspects for samples 1 through n:
  - presence of sufficient PV overvoltage protection (pass/fail);
  - functionality after PV overvoltage protection test (yes/no);
  - damage present after PV overvoltage protection test (yes/no);
  - user safety hazard present after PV overvoltage protection test (yes/no);
  - fault indication for PV overvoltage (yes/no, description);
  - presence of sufficient protection against miswiring (pass/fail);
  - functionality after PV overvoltage protection test (yes/no);
  - damage present after miswiring protection test (pass/fail);
  - user safety hazard present after miswiring protection test (pass/fail);
  - fault indication for miswiring (yes/no, description);
  - repairs needed after miswiring protection test (yes/no, description);
  - presence of sufficient protection against output overload (pass/fail);
  - functionality after output overload protection test (yes/no);
  - damage present after output overload protection test (yes/no);
  - user safety hazard present after miswiring protection test (yes/no);
  - fault indication for output overload (yes/no, description);
  - repairs needed after output overload protection test (yes/no, description).
- Tables:
  - table of nominal voltage, voltage limit, measured voltage, functionality, and pass/fail result during PV overvoltage test for each port and permanently connected or integrated load (see Table DD.3 for an example);
  - table of results from miswiring protection test including configuration description, description of fault indication, damage, safety hazard, functionality, and overall pass/fail result after test for each configuration (see Table DD.4 for an example).
- Comments:
  - individual comments, as necessary, for samples 1 through n;
  - overall comments, as necessary, for collective set of samples 1 through n.

IECNORM.COM : Click to view the full PDF of IEC TS 62257-9-5:2016 RLV
Withdrawn

Table DD.3 – Example table of PV overvoltage test results

Receptacle	Nominal voltage V	Voltage limit V	Sample ID	Measured voltage V	Functional after test?	Pass/fail
USB port	5	5,25	1	5,09	Yes	Pass
			2	5,08	Yes	Pass
			3	5,19	Yes	Pass
			4	5,36	Yes	Fail
Cigarette lighter port	12	15,8	1	21,3	Yes	Fail
			2	21,3	Yes	Fail
			3	21,7	Yes	Fail
			4	20,9	Yes	Fail
5 mm barrel plug	12	15,8	1	21,4	Yes	Fail
			2	21,4	Yes	Fail
			3	21,5	Yes	Fail
			4	21,0	Yes	Fail
Integrated light	--	--	1	--	Yes	Pass
			2	--	No	Fail
			3	--	Yes	Pass
			4	--	Yes	Pass

IECNORM.COM : Click to view the full PDF of IEC TS 62257-9-5:2016 RLV
Withdrawn

Table DD.4 – Example table of miswiring protection test results

Configuration	Sample ID	Fault indication	Damage?	Safety hazard?	Functional ?	Pass/fail	Remarks
PV reverse polarity	1	Warning light	No	No	Yes	Pass	PV fuse replaced with included spare.
	2	Warning light	No	No	Yes	Pass	PV fuse replaced with included spare.
	3	Warning light	No	No	Yes	Pass	PV fuse replaced with included spare.
	4	Warning light	No	No	Yes	Pass	PV fuse replaced with included spare.
Battery reverse polarity	1	Warning light	Yes	Yes	N/A	Fail	Control box emitted smoke. Test was discontinued.
	2	Warning light	No	No	Yes	Pass	
	3	Warning light	No	No	Yes	Pass	
	4	Warning light	No	No	Yes	Pass	
PV/battery plugs swapped	1	--	--	--	--	--	Test not performed due to prior failure.
	2	None	No	Yes	No	Fail	
	3	None	No	Yes	No	Fail	
	4	None	No	Yes	No	Fail	

IECNORM.COM : Click to view the full PDF of IEC TS 62257-9-5:2016 RLV

Annex EE
(normative)

Assessment of DC ports

EE.1 Background

DC ports (also called receptacles or outlets) are a key component of many lighting products; the specifications of the DC ports determine what appliances can be powered by the kit. Annex EE contains test procedures to determine the following properties of DC ports:

- the output voltage range and current-voltage relationship over a variety of operating conditions;
- the efficiency of the path from the DUT's battery to the port;
- the ability of included appliances to function at the voltage supplied by the port over a variety of operating conditions.

Universal serial bus (USB), a standard defined by the USB Implementers Forum, is a common port format for charging mobile phones and other portable devices, as well as providing power to small electronic appliances. Annex EE contains additional procedures to evaluate the performance of USB ports, including undershoot and overshoot during step increases and decreases in current, to ensure that these ports can safely power mobile phones and other portable devices. These test methods are derived from the *USB Battery Charging Specification*, revision 1.2, and the *USB Battery Charging 1.2 Compliance Plan*, revision 1.0, published by the USB Implementers Forum.

EE.2 Test outcomes

The test outcomes of the DC ports assessment are listed in Table EE.1.

IECNORM.COM : Click to view the full PDF of IEC TS 62257-9-5:2016 RLV
Withdrawn

Table EE.1 – DC ports assessment outcomes.

Metric	Reporting units	Related aspects	Remarks
Minimum port voltage for each port	Volts (V)	4.2.7.4 DC ports	One value for each port
Typical port voltage for each port	Volts (V)	4.2.7.4 DC ports	One value for each port
Maximum port voltage for each port	Volts (V)	4.2.7.4 DC ports	One value for each port
Plots of output voltage vs. output current, and associated data, for each port and each simulated battery voltage	Volts (V), amperes (A)	4.2.7.4 DC ports	Four plots for each tested port, and associated tabular data.
Plots of output voltage vs. output power, and associated data, for each port and each simulated battery voltage	Volts (V), watts (W)	4.2.7.4 DC ports	Four plots for each tested port, and associated tabular data
Plots of battery-to-port efficiency vs. output current, and associated data, for each port and each simulated battery voltage	Percentage, amperes (A)	4.2.7.4 DC ports	Four plots for each tested port, and associated tabular data
Plots of battery-to-port efficiency vs. output power, and associated data, for each port and each simulated battery voltage	Percentage, watts (W)	4.2.7.4 DC ports	Four plots for each tested port, and associated tabular data
Power consumption values for each built-in or permanently connected appliance for each simulated battery voltage	Watts (W)	4.2.7.2 Power consumption	Three values for each built-in or permanently connected appliance
Functionality of each appliance for each simulated battery voltage	Yes/no	4.2.7.1 Appliance voltage compatibility	Three values for each tested appliance
Tables of peak overshoot voltages, minimum undershoot voltages, and undershoot times for each port and each voltage tested.	Volts (V), milliseconds (ms)	4.2.7.4 DC ports	Three tables for each port, showing values for each current transition.
Maximum power for each port	Watts (W)	4.2.7.4 DC ports	One value for each port
Pass/fail for functionality for each port	Yes/no	4.2.7.4 DC ports	One value for each port
Pass/fail for truth in advertising for each port	Yes/no	4.2.7.4 DC ports	One value for each port
Data line resistance for each USB port	Ohms (Ω)	4.2.7.4 DC ports	One value for each USB port
Voltage on D- line for each USB port	Volts (V)	4.2.7.4 DC ports	One value for each applicable USB port
Voltage on D- line for each USB port	Volts (V)	4.2.7.4 DC ports	One value for each applicable USB port

IECNORM.COM : Click to view the full PDF of IEC TS 62257-9-5:2016 RLV
Withdrawn

EE.3 Related tests

The tests in Annex EE use some of the same equipment as the protection tests (Annex DD), particularly the output overload protection test (DD.4.3), which is a prerequisite. Test

laboratories may perform the DC ports tests immediately after the protection tests to take advantage of equipment commonalities. However, since the protection tests are potentially destructive, they are generally not performed on the same samples.

Several other tests, including the visual screening (Annex F), the charge controller behaviour test (Annex S), the solar charge test (Annex R), and the full-battery run time test (Annex M), are used to derive operating parameters for the ports tests.

The efficiencies measured in EE.4.2 are used in the energy service calculations (Annex GG).

The typical port voltage is used when a power supply is configured to directly power an appliance (Annex H).

EE.4 Procedure

EE.4.1 Preparation

Perform the following steps.

a) Identify the ports to be tested using this procedure. All ports capable of supplying power, including mobile phone charging ports, shall be tested, except that if the DUT has multiple identical ports only one port need be tested from each group of identical ports. Ports shall only be considered identical if they have identical driver circuitry and identical voltage and current limits.

b) If multiple samples of the product are being tested, the selected port from each group shall rotate between samples.

EXAMPLE Six samples of a product with three USB ports are to be tested. Port 1 would be tested on samples 1 and 4, port 2 on samples 2 and 5, and port 3 on samples 3 and 6.

c) If a port has multiple selectable voltage settings, each setting shall be considered a separate "port" for the purposes of testing.

d) Identify the maximum current for each port, using the following procedure.

   1) Use the maximum sustained current, measured in the output overload protection test (DD.4.3).

   2) If, during the output overload protection test, damage or a safety hazard was noted when a current less than or equal to the maximum sustained current was applied to the port, the maximum current for this test is the highest possible current that does not result in damage or a safety hazard.

e) Identify any special procedures required to enable the output on each port. For example, some USB ports require an attached device to be enumerated and negotiate to receive power in excess of a certain limit. If any such requirements exist, the manufacturer of the DUT should be consulted, if necessary, to develop a plan to successfully test the port.

f) Determine whether the port should be treated as a USB port for the purposes of this test. A port shall be considered a USB port if any of the following is true:

   – the port accepts a standard USB connector;

   – the DUT includes an adapter that allows a USB connector to be connected to the port;

   – the port is intended or expected to be used for charging mobile phones with a nominal DC input voltage of 5 V.

EE.4.2 Measurement of steady-state port characteristics

EE.4.2.1 General

This test measures the relationship of output voltage and steady-state battery-to-port efficiency to load current at four simulated battery voltages:

IECNORM.COM : Click to view the full PDF of IEC TS 62257-9-5:2016 RLV
Withdrawn

a) the standard operating voltage defined in Annex H, corresponding to typical operation during discharge;

b) the deep discharge protection voltage measured during the full-battery run time test (M.4.2) or charge controller behaviour test (S.4.1), corresponding to operation in a deeply discharged state;

c) the average charging voltage measured during the solar charge test (Annex R), corresponding to typical operation during solar charging;

d) a voltage corresponding to operation during solar charging with a nearly full battery.

The test procedure also includes an evaluation of the functionality and power consumption of permanently connected or built-in appliances, such as a light or radio integrated into the main unit of the DUT. For relatively simple products containing a built-in light point or a small number of identical light points, the average power determined from the full-battery run time test (Annex M) can be more representative of typical operating conditions than the single-point measurements performed in the assessment of DC ports. In such cases, the measurement of power consumption for the tested setting(s) of the built-in light points in EE.4.2.5 f) may be omitted.

EE.4.2.2 Equipment requirements

The following equipment is required. Equipment shall meet the requirements in Table CC.2.

- DC power supply with sufficient output current to achieve the maximum sustained current measured in DD.4.3.
- Two DC ammeters or multimeters.
- Two DC voltmeters or multimeters.
- Electronic load or variable and fixed resistors with specifications calculated in EE.4.2.5.

In some cases, it can be necessary to use multiple laboratory power supplies in parallel to achieve the required current. Unless otherwise specified by the power supply manufacturer, a diode should be used at the output of each power supply to prevent backfeeding. If the power supplies do not include current-sharing functionality, set one power supply to constant-voltage mode to control the voltage and set the remaining power supplies to constant-current mode with a voltage limit not exceeding the battery's overcharge protection voltage threshold, as measured in the charge controller behaviour test (Annex S).

The currents required in this test can exceed the maximum range of many multimeters. In this case, a current transducer or current sense resistor and voltmeter may be used instead of an ammeter or multimeter. The voltage should be measured at the DUT to compensate for the voltage drop across the ammeter or current sense resistor.

If an electronic load is used, and the electronic load contains current and voltage measurement functionality that meets the requirements for DC ammeters and voltmeters in Table CC.2 after accounting for any voltage drop between the port and the load, this functionality may be used instead of an ammeter and/or voltmeter at the port.

The electronic load shall be galvanically isolated from the power supply if this is necessary in order to avoid altering the behaviour of the DUT.

EE.4.2.3 Test prerequisites

The output overload protection test (DD.4.3), charge controller behaviour test (Annex S), and solar charge test (Annex R) shall be performed prior to the measurement of steady-state port characteristics. In addition, if the deep discharge protection voltage is measured during the full-battery run time test (M.4.2), this test shall be performed prior to the measurement of steady-state port characteristics.

IECNORM.COM : Click to view the full PDF of IEC TS 62257-9-5:2016 RLV
Withdrawn

EE.4.2.4 Apparatus

Example apparatus for the measurement of port characteristics during discharge is shown schematically in Figure EE.1.

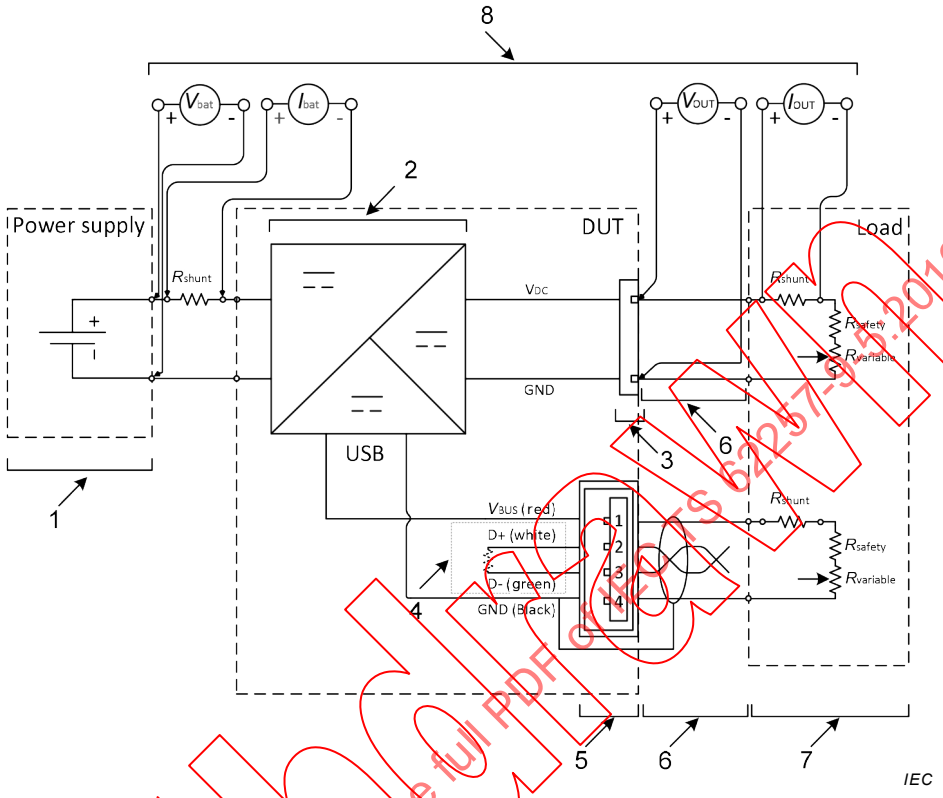

Key

1 DC power supply (sink/source)

2 DC-DC converter from the battery voltage to output voltage

3 Standardized DC port (e.g. 12 V)

4 Data pins configuration (D+ and D- are shorted with max. resistance 200 Ω for dedicated charging port type). The configuration might be different depending on its capability to charge particular a mobile phone

5 Standard USB female port

6 Cable with DC adapter and USB cable with shield and drain wire connected to the ground

7 Load with a fixed resistor to prevent short circuit and variable resistors

8 Voltage and current measurements using DC multimeters and shunt resistors

Figure EE.1 – Schematic of the DUT with DC port and USB port and variable resistors connected for the measurement of steady-state port characteristics

EE.4.2.5 Procedure

Perform the following steps.

a) Build the test configuration as in Figure EE.1.

b) Prepare the DUT sample according to Annex G.

c) Use a laboratory power supply to power the DUT power control unit according to Annex H. Set the power supply to the DUT standard operating voltage as described in Annex H.

d) Measure the current and voltage at the battery with no loads applied. Any power switches that do not control individual loads shall be turned on. (For example, if the DUT has a master power switch, turn it on.)

e) For each port under test, perform the following steps.

IECNORM.COM : Click to view the full PDF of IEC TS 62257-9-5:2016 RLV
Withdrawn

1) Measure the open-circuit voltage of the receptacle (with no load).
2) Calculate the safety resistor value, R_{safety}, corresponding to a current of 100 % of the maximum current at the nominal port voltage (from F.4.1.5):

$$R_{safety} = \frac{V_{nom,port}}{I_{max,port}}$$

where

R_{safety} is the safety resistor value, in ohms (Ω);

$V_{nom,port}$ is the nominal voltage of the port (from F.4.1.5), in volts (V);

$I_{max,port}$ is the maximum current for the port, in amperes (A).

The safety resistor should have a power rating sufficient to allow the maximum voltage of the port to be applied:

$$P_{Rsafety} \geq \frac{V^2_{max,port}}{R_{safety}}$$

where

$P_{Rsafety}$ is the maximum power rating of the safety resistor, in watts (W);

$V_{max,port}$ is the maximum expected voltage of the port, in volts (V);

R_{safety} is the safety resistor value, in ohms (Ω).

3) Calculate the value of the variable resistor $R_{variable}$. The full scale resistance of the variable resistor in series with the fixed resistor R_{safety} should result in a current of no less than 10 % of the maximum sustained current at the nominal port voltage (F.4.1.5):

$$R_{variable} \geq \frac{V_{nom,port}}{0{,}1 \times I_{max,port}} - R_{safety}$$

where

$R_{variable}$ is the variable resistor value, in ohms (Ω);

$V_{nom,port}$ is the nominal voltage of the port (from F.4.1.5), in volts (V);

$I_{max,port}$ is the maximum current for the port, in amperes (A);

R_{safety} is the safety resistor value, in ohms (Ω).

The variable resistor should have a maximum current rating sufficient to allow the maximum current of the port to be applied and a resolution sufficient to achieve the required current values (20 %, 40 %, 60 %, 80 %, and 100 % of the maximum sustained current) to within 5 %.

NOTE Variable resistors are generally rated by their manufacturers according to the maximum power dissipation of the full resistance element. If a maximum current rating is not given by the component manufacturer, the minimum allowable power rating can be calculated based on the full-scale resistance:

$$P_{Rvariable} \geq I^2_{max,port} \cdot R_{variable}$$

where

$P_{Rvariable}$ is the maximum power rating of the variable resistor, in watts (W);

$I_{max,port}$ is the maximum current for the port, in amperes (A);

$R_{variable}$ is the variable resistor value, in ohms (Ω).

An electronic load or other programmable load device may be used instead of a resistor. The current and voltage measurement functionality may be incorporated into the load device provided it meets the accuracy requirements of Table CC.2.

4) Connect the safety and variable resistors, in series, to the output of the port.
5) Allow the voltage to stabilize.

IECNORM.COM : Click to view the full PDF of IEC TS 62257-9-5:2016 RLV

6) Using a DC ammeter and voltmeter, or two multimeters, record the current and voltage at the port. Simultaneously, measure and record the voltage and current at the battery input terminals.

7) Repeat steps 1) to 5) with total resistance values corresponding to 20 %, 40 %, 60 %, 80 %, and 100 % of the maximum sustained current (within 5 %).

8) Perform any additional measurements necessary to verify compliance with the product specification, if applicable.

9) Disconnect the test load from the port.

f) Perform the following procedure for each built-in or permanently connected appliance, if any. (A light with the driver circuitry incorporated into the control box or main DUT housing is considered a built-in appliance, even if the light itself can be unplugged.) This step may be omitted for certain built-in light points, as described in EE.4.2.1.

1) Identify the appliance settings to be measured. Each of the appliance settings should be measured, up to a maximum of three settings. If the appliance offers more than three settings, or continuous settings, choose the maximum, minimum and median setting.

2) Turn on the built-in or permanently connected appliance. Record whether the appliance functions correctly.

3) Allow the appliance to stabilize for at least 5 min.

4) Measure and record the current and voltage at the battery.

5) If the appliance has multiple settings, repeat steps 1) and 2) for each setting.

g) Perform the following procedure for each included appliance, without an internal battery, intended to be connected to the port under test, other than built-in or permanently connected appliances tested in step f).

1) Connect the appliance to the port. If the appliance can be turned off, leave the appliance connected to the port but turned off for at least 5 min.

2) Turn on the appliance and allow it to operate for at least 5 min. Record whether the appliance functions correctly. If the appliance has multiple settings or operating modes, operate the appliance for 5 min in a setting or operating mode with high expected power consumption and 5 min in a setting or operating mode with low expected power consumption. For example, for a fan, the use the highest and lowest speeds.

3) Disconnect the appliance.

h) Perform the following procedure for each appliance with an internal battery, intended to be connected to the port under test, other than built-in or permanently connected appliances tested in step f).

1) Fully discharge the appliance's battery.

2) Connect the appliance to the port and leave it connected for at least 5 min. Determine whether the appliance charges by observing the port current as well as any charging indicators on the appliance. Record whether the appliance charges.

3) Fully charge the appliance's battery. (Alternatively, use a different sample of the appliance with a fully charged battery.)

4) Connect the appliance to the port and leave it connected for at least 5 min. (In some cases, an appliance will briefly charge when connected even though the battery was fully charged. In this case, allow the appliance to stop charging (e.g., wait until the current drops to zero or to a low value) before starting the five-minute waiting period.)

5) Disconnect the appliance from the port.

6) Check the appliance for functionality. Note any damage or abnormal operation.

i) Change the power supply voltage (simulated battery voltage) to the deep discharge protection voltage measured during the full-battery run time test (M.4.2) or charge controller behaviour test (S.4.1), then repeat steps d) through h). (If the DUT will not turn on or will not stay on at the selected voltage, increase the voltage in 0,05 V increments

IECNORM.COM : Click to view the full PDF of IEC TS 62257-9-5:2016 RLV
Withdrawn

until the DUT turns on, then decrease the voltage in 0,05 V increments to the lowest value for which the DUT remains on.)

j) Change the power supply voltage (simulated battery voltage) to the maximum battery voltage measured during the active overcharge protection test (S.4.2), or, if the active overcharge protection test need not be performed for the DUT, the maximum battery voltage observed during the solar charge test (Annex R). Repeat steps d) through h) at this voltage. (If the DUT will not turn on or stay on at the selected voltage, decrease the voltage in 0,05 V increments to the lowest value for which the DUT remains on.)

For products whose ports cannot be used while the product is charging, use the maximum battery voltage during the full-battery run time test (Annex M) instead of the maximum voltage measured during the active overcharge protection test or the solar charge test, and omit step k). Typically, the maximum voltage during the full-battery run time test is the voltage immediately after the DUT is turned on.

k) Change the power supply voltage (simulated battery voltage) to the average charging voltage measured during the solar charge test (Annex R). If this voltage differs from all previously tested voltages by more than 0,05 V, set the power supply to the average charging voltage and then repeat steps d) through f). Steps g) and h) need not be repeated at this voltage. If the difference is less than 0,05 V, testing at the average charging voltage need not be performed.

EE.4.2.6 Calculations

Perform the following calculations for each simulated battery voltage measured in EE.4.2.

a) For each operating point tested, calculate the battery input power and port output power by multiplying the current and voltage values.

b) For each battery voltage setting, calculate the idle power, P_{idle} , by multiplying the current and voltage measured at the battery with no load applied.

c) For each battery voltage setting, port, and load current, calculate the battery-to-port efficiency using the following formula:

$$\eta_{batt\text{-}port} = \min\left(1, \frac{P_{port}}{P_{batt} - P_{idle}}\right) \times 100\ \%$$

where

$\eta_{batt\text{-}port}$ is the battery-to-port efficiency, as a percentage (%);

P_{port} is the port output power, in watts (W);

P_{batt} is the power supplied to the DUT by the simulated battery, in watts (W);

P_{idle} is the idle power, in watts (W).

d) For each battery voltage setting and each setting of each built-in or permanently connected appliance, calculate the power consumption using the following formula:

$$P_{app} = P_{batt,app} - P_{idle}$$

where

P_{app} is the appliance power consumption, in watts (W);

$P_{batt,app}$ is the power supplied to the DUT by the simulated battery when the appliance is in use, in volts (V);

P_{idle} is the idle power, in watts (W).

e) For each port and each battery voltage setting, plot the following (see Figure EE.2).

1) Output voltage vs. output current.

2) Output voltage vs. output power (P_{port}).

3) Battery-to-port efficiency ($\eta_{batt\text{-}port}$) vs. output current.

4) Battery-to-port efficiency ($\eta_{batt\text{-}port}$) vs. output power (P_{port}).

IECNORM.COM : Click to view the full PDF of IEC TS 62257-9-5:2016 RLV
Withdrawn

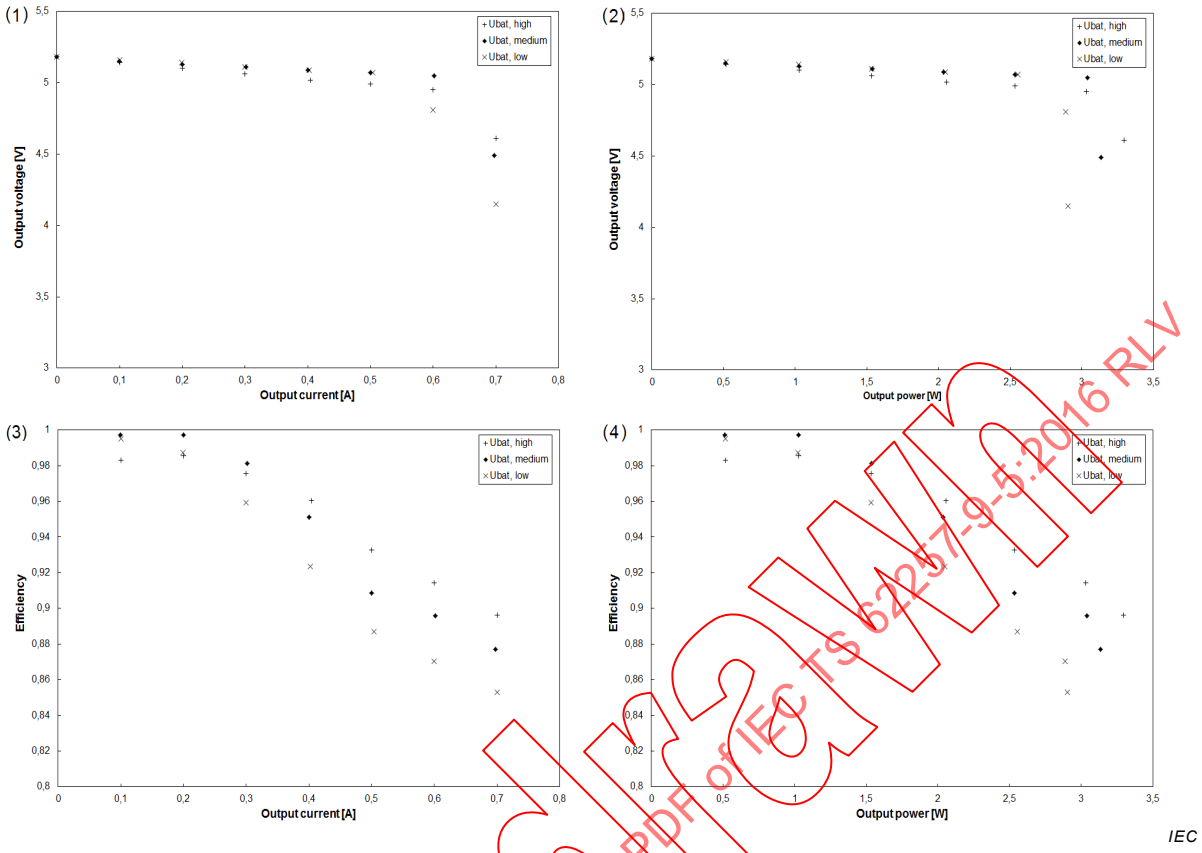

Figure EE.2 – Example of the plots of port characteristics

EE.4.3 Dynamic measurement

EE.4.3.1 General

In this test, the dynamic performance of the DC port is evaluated. The DC port is loaded with a variable pulsed load that represents the typical dynamic load (i.e. mobile charging, LED driver). The voltage and current transients are analysed by recording the data acquisition device (e.g. oscilloscope). Two different input voltages (high and low battery operational voltage) are performed to evaluate the capability of the port to cope with the dynamic load at different levels of states of charge. The performance of the ports in simultaneous operation is also evaluated under droop test.

This test is largely based on the DCP overshoot and undershoot voltage test from the *USB Battery Charging 1.2 Compliance Plan*, revision 1.0, published by the USB Implementers Forum.

This test may be omitted for all ports that are not USB ports as defined in EE.4.1.

EE.4.3.2 Equipment requirements

The following equipment is required. Equipment shall meet the requirements in Table CC.2.

- Electronic load capable of generating a stepped current waveform as defined in Table EE.2, with a minimum step duration of 20 ms and three or four distinct current levels (including zero), depending on whether optional tests are performed. Many commercially available electronic loads meet this requirement; alternatively, the load may be constructed using fixed and/or variable power resistors (see EE.4.2.5 for calculations) and/or power MOSFETs or similar switching devices.
- DC power supply.

IECNORM.COM : Click to view the full PDF of IEC TS 62257-9-5:2016 RLV
Withdrawn

- Digital storage oscilloscope or data-logging device capable of recording voltage and current at a rate of at least 1 000 samples per second. This functionality may be incorporated into the electronic load.
- Current transducer or current sense resistor, if needed, to allow current to be recorded by the oscilloscope or data-logging device. This functionality may be incorporated into the electronic load. (For example, some electronic loads provide an analogue current monitor output.)

The oscilloscope or data-logging device shall be galvanically isolated from the power supply and load if this is necessary in order to avoid altering the behaviour of the DUT. Any isolation device shall have sufficient bandwidth to provide an accurate measurement of the voltage transients.

The voltage drop between the power supply and the DUT's battery input terminals shall be minimized; components such as ammeters and diodes (which are required or permitted in EE.4.2) shall not be included between the power supply and the DUT for the dynamic port measurement.

NOTE Since this test is only performed on USB ports, in most cases, a lower power supply current will be used than in the steady-state measurement of high-current ports (EE.4.2), and the test can be performed without using multiple power supplies in parallel.

EE.4.3.3 Test prerequisites

The test prerequisites are identical to those for the measurement of steady-state port characteristics (EE.4.2).

EE.4.3.4 Apparatus

Example apparatus for the dynamic port measurement is shown schematically in Figure EE.3.

Withdrawn
IECNORM.COM : Click to view the full PDF of IEC TS 62257-9-5:2016 RLV

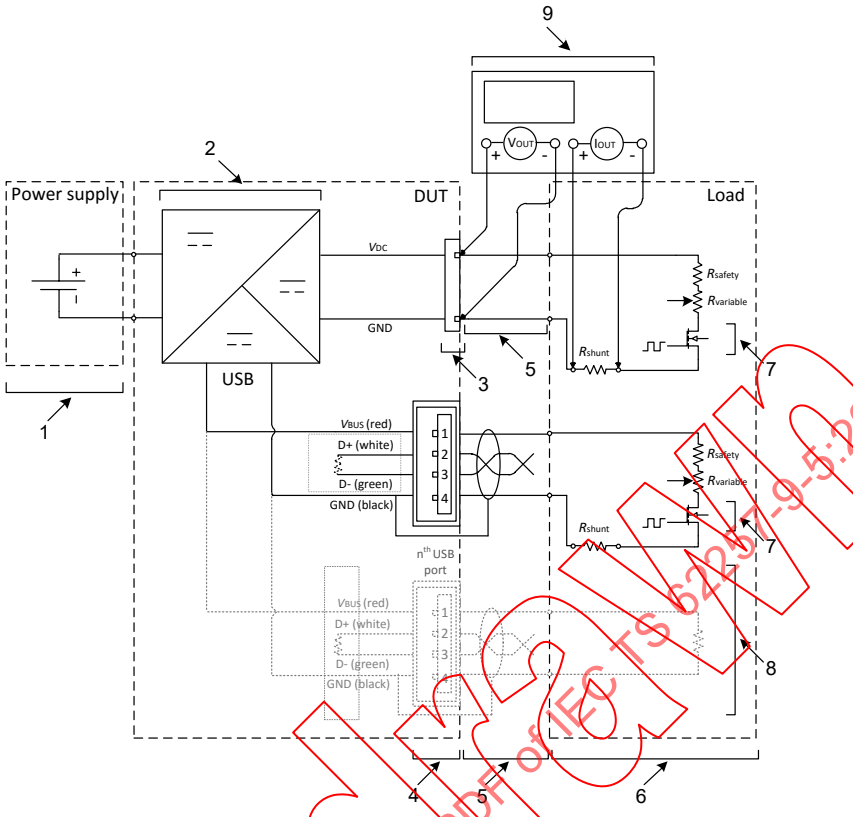

Key

1 DC power supply (sink/source)
2 DC-DC converter from the battery voltage to output voltage
3 Standardized DC port (e.g. 12 V)
4 Standard USB female port
5 Cable with DC adapter and USB cable with shield and drain wire connected to the ground
6 Pulse load with a fixed resistor to prevent short circuit and variable resistors
7 Electronic switch controlled by pulse generator
8 Additional USB port
9 Oscilloscope

Figure EE.3 – Schematic of the DUT with DC port and USB port and variable resistors connected for the dynamic measurement

EE.4.3.5 Procedure

The following steps shall be followed to evaluate the transient response of the port.

a) Build the test configuration illustrated in Figure EE.3 with variable pulsed load specified in EE.4.3.2.

b) Use a laboratory power supply to power the DUT power control unit according to Annex H. Set the power supply to the DUT standard operating voltage as described in Annex H.

c) Connect the voltage and current data acquisition device at the output of the DC port. Set the logging interval or sampling rate to at least 1 ms or 1 000 samples per second.

d) Perform either of the following procedures to conduct the test. Procedure 1 can be performed using low-cost equipment, while procedure 2 can be simpler to perform if a suitable electronic load is used. The currents shall be accurate to within 5 %.

Procedure 1:

IECNORM.COM : Click to view the full PDF of IEC TS 62257-9-5:2016 RLV
Withdrawn

1) Configure the pulsed load to alternate between the two current levels shown in the first row of Table EE.2 with a frequency of no more than 5 Hz and duty cycle of 50 %.

2) Record the voltage and current for at least 100 ms after the current transitions indicated in Table EE.2.

3) Repeat steps 1) and 2) for the remaining current pairs in Table EE.2. Omit row 4 if not required by the product specification or if the maximum sustained current from DD.4.3 is less than or equal to 0,5 A.

Procedure 2:

1) Configure the pulsed load with a stepped current waveform similar to that illustrated in Figure EE.4 in order to capture all current transitions required in Table EE.2. Omit row 4 if not required by the product specification or if the maximum sustained current from DD.4.3 is less than or equal to 0,5 A. The duration of each step shall be no less than 100 ms.

2) Record the voltage and current for at least 100 ms after the current transitions indicated in Table EE.2.

e) Change the power supply voltage to the deep discharge protection voltage measured during the full-battery run time test (M.4.2) or charge controller behaviour test (S.4.1), then repeat step d). (If the DUT will not turn on or will not stay on at the selected voltage, increase the voltage in 0,05 V increments until the DUT turns on, then decrease the voltage in 0,05 V increments to the lowest value for which the DUT remains on.) Omit this step if the voltage would be greater than or equal to the standard operating voltage.

f) Change the power supply voltage to the maximum voltage measured during the active overcharge protection test (S.4.2), or the solar charge test (Annex R) if the active overcharge protection test need not be performed for the DUT, then repeat step d). (If the DUT will not turn on or stay on at the selected voltage, decrease the voltage in 0,05 V increments to the lowest value for which the DUT remains on.) Omit this step if the voltage would be less than or equal to the standard operating voltage.

Table EE.2 – Current pairs for dynamic test

Row number	Current 1 A	Current 2 A	Current transitions to record
1	0,0	0,1	rising edge
2	0,1	0,5	rising edge
3	0,0	0,5	rising and falling edges
4 (optional)	0,0	Maximum sustained current from DD.4.3	rising and falling edges
NOTE This step waveform is based on the DCP overshoot and undershoot voltage test from the *USB Battery Charging 1.2 Compliance Plan*, revision 1.0, published by the USB Implementers Forum.			

IECNORM.COM : Click to view the full PDF of IEC TS 62257-9-5:2016 RLV

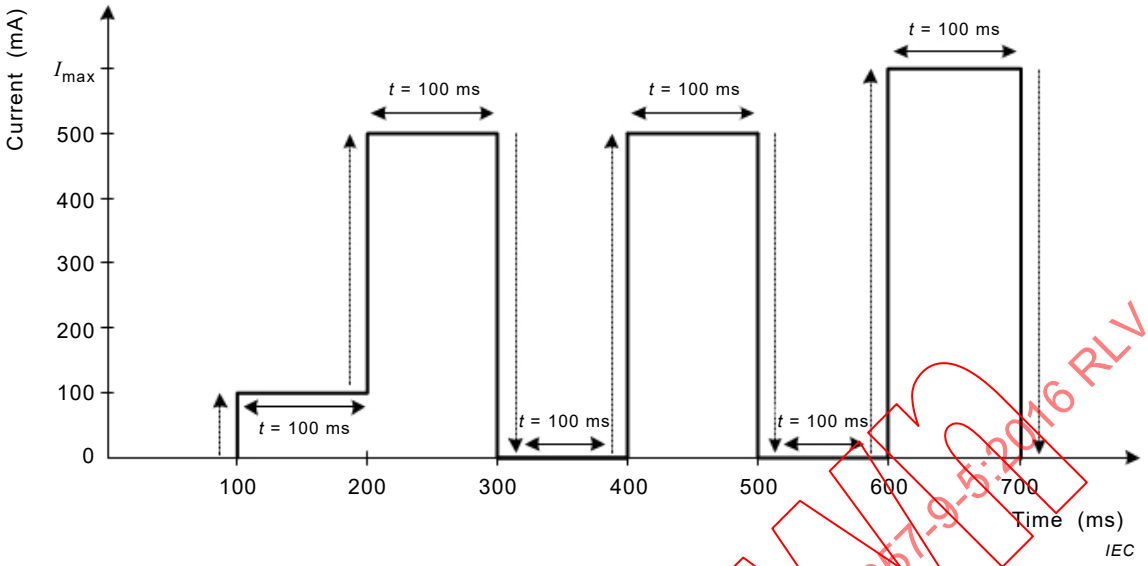

Figure EE.4 – Illustration of stepped current waveform for procedure 2

EE.4.3.6 Calculations

For each port and each voltage setting measured, at each current transition, measure and record the following quantities, as illustrated in Figure EE.5:

- peak overshoot voltage, defined as the maximum voltage amplitude of the transient change of the output voltage that exceeds the steady state value, as illustrated in Figure EE.5;
- minimum undershoot voltage, defined as the minimum voltage reached during a transient drop in voltage;
- undershoot time, defined as the duration of the transient drop in voltage below 4,75 V.

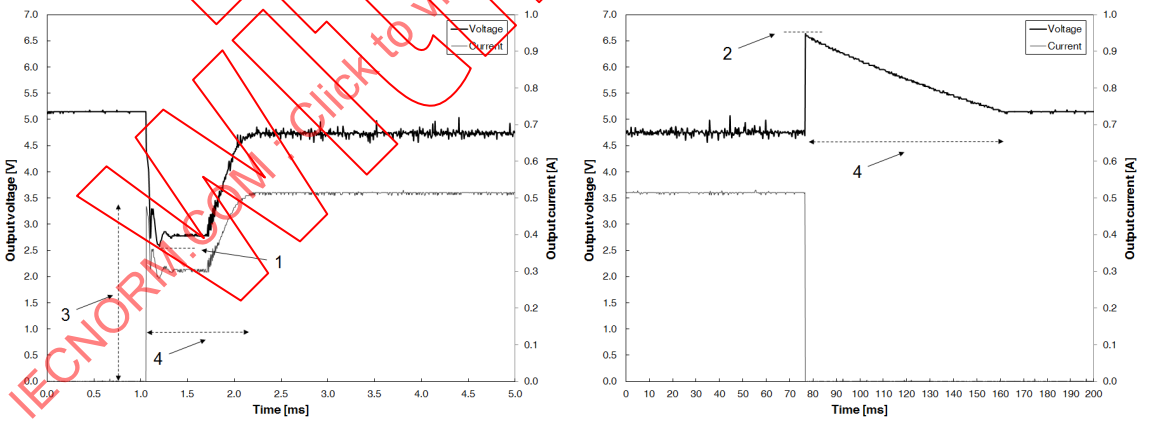

Key

1 Peak undershoot voltage
2 Peak overshoot voltage
3 Undershoot time (s)

Figure EE.5 – Example time series plot of voltage and current showing the transients

EE.4.4 Summary calculations

For each port, perform the following calculations.

IECNORM.COM : Click to view the full PDF of IEC TS 62257-9-5:2016 RLV
Withdrawn

a) Calculate the minimum and maximum voltages ($V_{min,port}$ and $V_{max,port}$) over the entire range of conditions (battery voltage and load) in EE.4.2. Also report the power supply voltage (simulated battery voltage) and port current under which each voltage value was measured.

b) Calculate the maximum port output power over the entire range of conditions in EE.4.2.

EXAMPLE For port 1, the minimum voltage was 4,86 V, measured with a simulated battery voltage of 3,07 V/cell and load 3,3 Ω; the maximum voltage was 5,10 V, measured with a simulated battery voltage of 4,20 V/cell and no load (open circuit).

c) Calculate the typical port voltage ($V_{typ,port}$) using the following procedure.

1) Identify the typical load current for the port. The typical port current is the lesser of 0,5 A and the maximum sustained current measured during the output overload protection test.

NOTE This definition takes into account that USB ports are permitted by the Battery Charging Specification, revision 1.2, published by the USB Implementers Forum, to operate within a wide voltage range for currents between 0,5 A and 1,5 A.

2) Identify the output voltage at the typical load, determined in step 1), under the conditions specified in EE.4.2 steps a) through c) (e.g. when the DUT's battery input is driven at the standard operating voltage); interpolate between measurements if no measurement was performed at the required load. This is the typical port voltage ($V_{typ,port}$).

EE.4.5 Pass/fail tests for functionality and truth in advertising

Perform the following steps:

a) Assess each port's functionality using the following steps:

1) If the manufacturer specifies minimum and/or maximum voltage values for the port, use the data from EE.4.2 to assess whether the output voltage remains within the manufacturer-specified range.

2) Assess compliance with any other requirements defined in the product specification.

b) Assess truth in advertising using the following steps.

1) If the manufacturer advertises a current or power value or range for one or more ports, use the data from EE.4.2 to determine whether the advertised value or range is accurate. If minimum and/or maximum values are given, compare the advertised values to the minimum and/or maximum values from EE.4.4. If a nominal, typical, or average value is given, determine whether the nominal value is within the range of the minimum and maximum values from EE.4.4.

2) If the manufacturer advertises that one or more ports can be used to charge or power appliances (e.g. mobile phone, radio, refrigerator, fan) other than those included in the kit, use the procedure in HH.5 step a) to determine the power consumption of the appliance. Compare this value with the maximum power calculated in EE.4.4. If the generic appliance power consumption from HH.5 is greater than the maximum power output of the port from EE.4.4, the port's capabilities are not accurately advertised.

EXAMPLE If the manufacturer claims that the 12 V port can power a small television, but the maximum port output power is 5 W, then the port's capabilities are not accurately advertised because according to Table HH.1 a small television consumes 10 W.

3) For USB ports, perform the following steps.

i) With the DUT powered at the standard operating voltage, measure the voltages on the data lines (D+ and D-) relative to the ground line. Also record the port voltage at the time this measurement is made. (See Figure EE.6 for a schematic diagram of a typical USB charging port.)

ii) If no voltage is present on the data lines, measure the resistance between the data lines. (Use caution as applying a voltage to an ohmmeter can damage the instrument.)

IECNORM.COM : Click to view the full PDF of IEC TS 62257-9-5:2016 RLV
Withdrawn

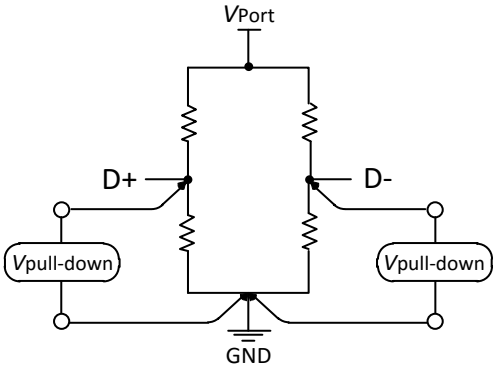

Figure EE.6 – Typical configuration of USB port for special charger

EE.5 Reporting

Report the following in the input voltage range test report.

- Metadata:
  - report name;
  - procedure(s) used;
  - DUT manufacturer;
  - DUT name;
  - DUT model number;
  - DUT setting;
  - DUT orientation;
  - test room temperature (°C);
  - name of test laboratory;
  - approving person;
  - date of report approval.
- Plots:
  - four plots of port voltage vs. output current for each port;
  - four plots of port voltage vs. output power for each port;
  - four plots of battery-to-port efficiency vs. output current for each port;
  - four plots of battery-to-port efficiency vs. output power for each port;
  - one plot of voltage and current vs. time for each port during dynamic test.

  Multiple characteristic curves may be plotted on the same plot, as long as the results are clearly readable. For example, results from multiple ports for the same operating conditions (e.g. discharging, 14,8 V) may be combined into a single plot; multiple scenarios for the same port may be combined into a single plot; or multiple quantities (voltage and efficiency) may be plotted on the same plot.
- Tables:
  - four tables for each port showing the relationship between output current and output voltage;
  - four tables for each port showing the relationship between output power and output voltage;
  - six tables for each port showing the relationship between output current and battery-to-port efficiency;

IECNORM.COM : Click to view the full PDF of IEC TS 62257-9-5:2016 RLV
Withdrawn

  - four tables for each port showing the relationship between output power and battery-to-port efficiency;
  - table of power consumption values and functionality for each tested appliance;
  - table of pass/fail functionality and truth in advertising values for each port;
  - table of minimum, typical, and maximum voltages and maximum power for each port;
  - three tables of peak overshoot voltage, peak undershoot voltage, and undershoot time;
  - table of data line voltages and resistances for each USB port.

    Multiple tables sharing the same set of row or column headings may be combined into a single table.
- Comments:
  - individual comments, as necessary, for samples 1 through n;
  - overall comments, as necessary, for collective set of samples 1 through n.

Withdrawn
IECNORM.COM : Click to view the full PDF of IEC TS 62257-9-5:2016 RLV

Annex FF
(normative)

Appliance tests

FF.1 Background

Annex FF applies to any appliances included or advertised for use with stand alone lighting kits. Appliances to be tested include light points, fans, televisions, radios, refrigerators and other similar devices. If more than one identical appliance is included with the DUT kit, only one of each identical appliance should be tested to represent a single sample.

Some appliances are "permanently installed" appliances, like an LED light point with an LED driver that is included as part of the battery box. These appliances shall be identified in the visual screening (Annex F) and tested according to methods described in the assessment of DC ports (Annex EE).

There are two tests in Annex FF: an appliance power consumption test (FF.4) and an operating voltage range test (FF.5). The power consumption test (FF.4) is only applicable to appliances without internal batteries. The operating voltage range test (FF.5) is applicable to appliances with and without internal batteries, but is necessary only for appliances that were not tested with the kit in EE.4.2.5 (for example, new appliances that a manufacturer wishes to test for use with a kit that have already been tested).

FF.2 Test outcomes

The appliance power consumption test outcomes are listed in Table FF.1.

Table FF.1 – Appliance power consumption test outcomes

Metric	Reporting units	Related aspects	Remarks
Power consumption table	Voltage (V), Current (A), Power (W), Yes/no	4.2.7.2 Power consumption	A table with 4 columns and multiple rows, including the column headings for each appliance on each measured setting.
Functionality of each appliance for each simulated battery voltage	Yes/no	4.2.7.1 Appliance voltage compatibility	One yes/no value for appliance functionality under each set of test conditions, and a description of any damage or abnormal operation.

FF.3 Related tests

The power consumption test uses inputs from the visual screening (Annex F) and the assessment of DC ports (Annex EE). The measurements of power consumption are used in the energy service calculations (Annex GG).

IECNORM.COM : Click to view the full PDF of IEC TS 62257-9-5:2016 RLV
Withdrawn

FF.4 Procedure

FF.4.1 General

The appliance is tested for power consumption using one of the procedures below:

- LED or CFL light points are tested according to FF.4.2;
- television sets are tested according to FF.4.3;
- radios are tested according to FF.4.4;
- other appliances without internal batteries are tested according to FF.4.5;
- other appliances with internal batteries are tested according to FF.4.6.

FF.4.2 Test procedure for LED or CFL light points

FF.4.2.1 General

The DUT's included LED or CFL light point is tested for power consumption.

FF.4.2.2 Equipment requirements

The following equipment is required. Equipment shall meet the requirements of Table CC.2.

- DC power supply.
- DC ammeter and voltmeter, or two multimeters.

FF.4.2.3 Test prerequisites

At the start of the test, the light point samples shall be minimally altered and fully functional.

Samples should be prepared according to Annex G.

FF.4.2.4 Procedure

a) Identify the DUT's typical port voltages for any ports that could be used to power the light point, using the values calculated in EE.4.4.

b) Identify the light point settings to be measured. Each of the light point settings should be measured, up to a maximum of three settings. If the light point offers more than three settings, or continuous settings, choose the maximum, minimum and median setting.

c) Prior to measuring, connect the appliance to a power supply. Turn the light point on, set it to one of the settings to be measured and stabilize the light point according to H.5.3 at the typical port voltage.

d) After stabilization is complete, using a DC ammeter and voltmeter, or two multimeters, record the current and voltage at the light point (where the wire leads are connected to the light point as shown in Figure H.1), and whether the light point is functional (yes/no). (The current and voltage measurement functionality may be read from the power supply provided it meets the accuracy requirements of Table CC.2 after accounting for voltage drop in the wires between the power supply and the light point.)

e) For each additional setting to be measured, set the light point to the setting being measured and allow it to stabilize for 5 min. Then repeat step d) for the setting being measured.

FF.4.2.5 Calculations

Calculate the DC power consumption for each setting by multiplying the current and voltage measured at the typical port voltage for each setting.

Withdrawn
IECNORM.COM : Click to view the full PDF of IEC TS 62257-9-5:2016 RLV

FF.4.3 Test procedure for television sets

FF.4.3.1 General

The DUT's included television set's On (operation) mode power consumption shall be measured as specified in IEC 62087-3:2015, 6.4, using the dynamic broadcast-content video signal provided in IEC 62087-2:2015, 4.1.3.

FF.4.3.2 Equipment requirements

The following equipment is required:

- DC power supply meeting the requirements in Annex CC;
- power measurement instrument meeting the requirements of IEC 62087-1:2015, 5.1.5;
- audio/video signal generation equipment meeting the requirements of IEC 62087-2:2015, 6.1, 6.2, and 6.3;
- dynamic broadcast-content video signal media provided in IEC 62087-2:2015, 4.1.3;
- illuminance measuring instrument meeting the requirements of IEC 62087-1:2015, 5.1.8, if the television set is tested with automatic brightness control enabled.

FF.4.3.3 Test prerequisites

At the start of the test the television set samples shall be minimally altered and fully functional.

Samples should be prepared according to Annex G.

FF.4.3.4 Procedure

a) Identify the DUT's typical port voltages for any ports that could be used to power the television set, using the values calculated in EE.4.4.

b) Prior to measuring, connect the television set to a power supply set at the typical port voltage for one of the ports identified in step a).

c) Configure the television set as specified in IEC 62087-3:2015, 6.3.10.

d) Stabilize the television set as per IEC 62087-3:2015, 6.4.2.

e) Measure the television set's On (operation) mode power consumption using the dynamic broadcast-content video signal according to IEC 62087-3:2015, 6.4.5.3.

f) Record whether the television set is fully functional.

For television sets with an automatic brightness control feature enabled by default, the product specification should specify whether the testing should be done with automatic brightness control enabled or disabled.

FF.4.3.5 Calculations

Calculate the average power consumed over the full, ten minute duration of the dynamic broadcast-content video signal as per IEC 62087-3:2015, Clause A.4.

FF.4.4 Test procedure for radios without internal batteries

FF.4.4.1 General

The DUT's included radio without internal batteries is tested for power consumption.

FF.4.4.2 Equipment requirements

The following equipment is required:

IECNORM.COM : Click to view the full PDF of IEC TS 62257-9-5:2016 RLV
Withdrawn

- DC ammeter and voltmeter, or two multimeters, meeting the requirements in Annex CC;
- sound level meter that at a minimum meets the requirements of IEC 61672-1 Class 2 and has a measurement range that has a minimum of at most 34 dBA;
- computer or hardware device able to generate pink noise;
- FM transmitter able to receive an audio signal input from the computer or hardware device output.

FF.4.4.3 Test prerequisites

At the start of the test the radio samples shall be minimally altered and fully functional.

Samples should be prepared according to Annex G.

FF.4.4.4 Procedure

a) Identify the DUT's typical port voltages for any ports that could be used to power the radio, using the values calculated in EE.4.4.

b) Place the sound level meter at a distance of 0,5 m from the radio speaker and ensure the background noise level measured is less than 35 dBA.

c) Generate a pink noise audio signal using a computer or hardware device and output this to the FM transmitter.

d) Adjust the output volume from the computer or hardware device and the FM transmitter to the approximately 50 %.

e) Tune the radio to clearly receive the pink noise audio signal from the FM transmitter.

f) Adjust the volume output from the radio such that the sound level meter measures 70 dBA at a distance of 0,5 m from the radio speaker.

g) Allow the radio to stabilize for 30 min.

h) Re-adjust the volume output from the radio such that the sound level meter measures 70 dBA at a distance of 0,5 m from the radio speaker.

i) After stabilization is complete, using a DC ammeter and voltmeter, or two multimeters, record the current and voltage at the radio (where the wire leads are connected to the radio as shown in Figure H.1), and whether the radio is functional (yes/no).

FF.4.4.5 Calculations

Calculate the DC power consumption by multiplying the current and voltage measured at the typical port voltage.

FF.4.5 Test procedure for fans, motor-driven appliances, and other appliances without internal batteries

FF.4.5.1 General

The DUT's included fan, motor-driven appliance, or other appliance without internal batteries is tested for power consumption.

FF.4.5.2 Equipment requirements

The following equipment is required:

- DC power supply meeting the requirements in Annex CC;
- DC ammeter and voltmeter, or two multimeters, meeting the requirements in Annex CC.

FF.4.5.3 Test prerequisites

At the start of the test the appliance samples shall be minimally altered and fully functional. Fans shall be tested in still air.

IECNORM.COM : Click to view the full PDF of IEC TS 62257-9-5:2016 RLV
Withdrawn

Samples should be prepared according to Annex G.

FF.4.5.4 Procedure

a) Identify the DUT's typical port voltages for any ports that could be used to power the appliance, using the values calculated in EE.4.4.

b) Identify the appliance settings to be measured. Each of the appliance settings should be measured, up to a maximum of three settings. If the appliance offers more than three settings, or continuous settings, choose the maximum, minimum and median setting.

c) Prior to measuring, connect the appliance to a power supply set to the typical port voltage. Turn the appliance on and set it to one of the settings to be measured.

d) Adjust the power supply so that the voltage at the appliance (where the wire leads are connected to the appliance as shown in Figure H.1) is the typical port voltage.

e) Allow the appliance to stabilize for 30 min.

f) After stabilization is complete, using a DC ammeter and voltmeter, or two multimeters, record the current and voltage at the appliance (where the wire leads are connected to the appliance as shown in Figure H.1), and whether the appliance is functional (yes/no). (The current and voltage measurement functionality may be read from the power supply provided it meets the accuracy requirements of Table CC.2 after taking into account the voltage drop in the wires connecting the power supply to the appliance.)

g) For each additional setting to be measured, set the appliance to the setting being measured and allow it to stabilize for 30 min. Then repeat step f) for the setting being measured.

FF.4.5.5 Calculations

Calculate the DC power consumption for each setting by multiplying the current and voltage measured at the typical port voltage for each setting.

FF.4.6 Test procedure for other appliances with internal batteries

FF.4.6.1 General

The DUT's appliance with internal batteries is tested for power consumption.

FF.4.6.2 Equipment requirements

The following equipment is required. Equipment shall meet the requirements of Annex CC.

- Battery analyser.
- Voltage data logger.
- Current data logger (e.g. voltage data logger and current transducer).

FF.4.6.3 Test prerequisites

At the start of the test the appliance samples shall be minimally altered and fully functional. Fans shall be tested in still air.

Samples should be prepared according to Annex G.

This test should be performed after the standby loss measurement (S.4.5).

FF.4.6.4 Procedure

Perform the following steps.

IECNORM.COM : Click to view the full PDF of IEC TS 62257-9-5:2016 RLV
Withdrawn

a) Identify the appliance settings to be measured. Each of the appliance settings should be measured, up to a maximum of three settings. If the appliance offers more than three settings, or continuous settings, choose the maximum, minimum and median setting.

b) Charge or discharge the appliance battery until it is at a state-of-charge of 50 %. Determine the DUT's battery capacity according to the battery test annex (Annex K).

c) Prepare the voltage data logger to measure voltage across the appliance battery terminals at intervals of 1 s or less. Prepare the current data logger to measure the current exiting the appliance battery at the negative battery terminal at intervals of 1 s or less.

d) Turn the appliance on and set it to one of the settings to be measured.

e) Record voltage and current for 10 min.

f) Repeat the test for each setting to be measured.

FF.4.6.5 Calculations

Analyse the time-series current and voltage data to estimate the average power over each setting's run time and the total energy removed from the battery over each setting's run time.

a) Determine the average power over the run time ($P_{b,i}$) using the following formula:

$$P_{b,i} = \frac{\sum_{i}\left(I_{b,i} \cdot V_{b,i}\right)}{n}$$

where

$P_{b,i}$ is the average power exiting the battery over the run time, in watts (W);

$I_{b,i}$ is the current exiting the battery over the run time, in amperes (A);

$V_{b,i}$ is the voltage exiting the battery over the run time, in volts (V);

n is the total number of current and voltage measurements over the run time (unitless).

b) Determine the energy removed from the battery over the run time ($E_{b,i}$) using the following formula:

$$E_{b,i} = \sum_{i}\left(I_{b,i} \cdot V_{b,i} \cdot t_i\right)$$

where

$E_{b,i}$ is the energy exiting the battery over the run time, in watt·hours (Wh);

$I_{b,i}$ is the current exiting the battery over the run time, in amperes (A);

$V_{b,i}$ is the voltage exiting the battery over the run time, in volts (V);

t_i is the duration of time associated with each current and voltage point over the run time, in hours (h).

FF.5 Appliance operating voltage range test procedure

FF.5.1 General

This procedure assesses whether the appliance operates normally and without damage at the operating voltages that it would experience when powered by the kit under test. This procedure shall be performed on all appliances that were not subject to the test procedure in EE.4.2.5. If the appliance was tested with the kit in EE.4.2.5, this procedure is not necessary.

NOTE This procedure is primarily intended to enable testing of additional appliances for kits that have already been tested, in cases where the test laboratory does not possess samples of the kit components required for the test in EE.4.2.5, for example in cases where a manufacturer wishes to include a new appliance in an existing kit that has already been tested according to this part of IEC 62257.

IECNORM.COM : Click to view the full PDF of IEC TS 62257-9-5:2016 RLV
Withdrawn

FF.5.2 Equipment requirements

The following equipment is required:

- DC power supply meeting the requirements in Annex CC;
- DC ammeter and voltmeter, or two multimeters, meeting the requirements in Annex CC.

FF.5.3 Procedure for appliances without internal batteries

This procedure shall be performed after the power consumption has been measured according to FF.4. Perform the following steps.

a) If the appliance has an on/off switch or can otherwise be turned off, perform the following steps.
   1) Turn off the appliance. Measure the power or current consumption of the appliance at the typical port voltage for one of the appropriate ports for that appliance.
   2) From the plots of port voltage vs. power or port voltage vs. current generated in EE.4.2.6, and corresponding data, identify the highest voltage over all test conditions corresponding to the current or power consumption of the appliance when turned off, as measured in step 1). If necessary, linearly interpolate between adjacent measurements. If the appliance can be used with multiple ports, use the highest value over all ports with which the appliance can be used.
   3) Without turning the appliance on, apply a voltage to the appliance equal to the value identified in step 2).
   4) Wait 5 min.
   5) Return the voltage at the appliance to the typical port voltage.
   6) Record whether the appliance functions correctly; note any damage or abnormal operation.
b) Perform the following steps for each appliance setting measured in FF.4.
   1) From the plots of port voltage vs. power generated in EE.4.2.6, and corresponding data, identify the minimum and maximum voltage over all test conditions corresponding to the power consumption of the appliance as measured in FF.4. If necessary, linearly interpolate between adjacent measurements. If the appliance can be used with multiple ports, use the minimum and maximum values over all ports with which the appliance can be used.
   2) Apply a voltage to the appliance equal to the minimum voltage identified in step 1).
   3) Turn ON the appliance and allow it to operate for at least five minutes. Record whether the appliance functions correctly; note any damage or abnormal operation
   4) Set the voltage at the appliance to the maximum voltage identified in step 1).
   5) Allow the appliance to operate for at least five minutes. Record whether the appliance functions correctly; note any damage or abnormal operation.
   6) If the appliance does not function correctly, return the voltage at the appliance to the typical port voltage and again test the appliance for functionality.

FF.5.4 Procedure for appliances with internal batteries

Perform the following steps.

a) Identify the typical port voltage of a port on the kit with which the appliance is likely to be used.
b) Fully discharge the appliance's battery.
c) Using a DC power supply, apply a voltage to the appliance equal to the typical port voltage identified in step a).
d) Allow the appliance to stabilize for 5 min.

IECNORM.COM : Click to view the full PDF of IEC TS 62257-9-5:2016 RLV
Withdrawn

e) Measure the current after the 5 min stabilization period has elapsed.

f) From the plots of port voltage vs. port current generated in EE.4.2.6, and corresponding data, identify the minimum and maximum port voltage values over all test conditions corresponding to the appliance current measured in step e). If necessary, linearly interpolate between adjacent measurements. If the appliance can be used with multiple ports, use the minimum and maximum values over all ports with which the appliance can be used.

g) Apply a voltage to the appliance equal to the minimum voltage identified in step f).

h) Determine whether the appliance charges by observing the port current as well as any charging indicators on the appliance. Record whether the appliance charges.

i) Apply a voltage to the appliance equal to the maximum voltage identified in step f).

j) Determine whether the appliance charges by observing the port current as well as any charging indicators on the appliance. Record whether the appliance charges.

k) If the appliance does not charge or exhibits abnormal behaviour in step j), decrease the voltage at the appliance to the typical port voltage and again check whether the appliance charges.

l) Fully charge the appliance's battery. (Alternatively, use a different sample of the appliance with a fully charged battery.)

m) Using a DC power supply, apply a voltage to the appliance equal to the typical port voltage identified in step a).

n) Allow the appliance to stabilize for at least five minutes. (In some cases, an appliance will briefly charge when connected even though the battery was fully charged. In this case, allow the appliance to stop charging (e.g. wait until the current drops to zero or to a low value) before starting the five-minute waiting period.)

o) Repeat steps e) through k) with the fully charged appliance. If the appliance starts charging when the voltage is changed, start the 5 min timer after the appliance stops charging.

p) Disconnect the appliance from the port.

q) Check the appliance for functionality. Note any damage or abnormal operation.

FF.6 Reporting

Report the following in the appliance power consumption test report.

- Metadata:
  - report name;
  - procedure(s) used;
  - DUT manufacturer;
  - DUT name;
  - DUT model number;
  - test room temperature (°C);
  - name of test laboratory;
  - approving person;
  - date of report approval;
  - appliances tested;
  - appliance settings tested;
  - results for tested appliances aspects for samples 1 through n;
  - comments.

IECNORM.COM : Click to view the full PDF of IEC TS 62257-9-5:2016 RLV
Withdrawn

- Tables:
  - table of typical port voltage, measured voltage, measured current, power, and, whether the appliance is functional for each sample of each appliance on each setting (see Table FF.2 for an example);
  - comments;
  - individual comments, as necessary, for samples 1 through n;
  - overall comments, as necessary, for collective set of samples 1 through n.

Table FF.2 – Example table of nominal operating voltage, measured voltage, measured current, and calculated power.

Appliance	Setting	Sample #	Typical port voltage V	Measured voltage V	Measured current A	Power W	Functionality Yes/no	Remarks
Light 1	High	1	12,3	12,32	0,27	3,3	Yes	
Fan	High	1	12,3	12,32	0,67	8,25	Yes	
TV	Standard	1	12,3	12,32	1,21	14,9	Yes	

Withdrawn
IECNORM.COM : Click to view the full PDF of IEC TS 62257-9-5:2016 RLV

Annex GG
(normative)

Energy service calculations

GG.1 Background

Annex GG describes methods for synthesizing test results to estimate the energy service capabilities for an off-grid solar lighting product with additional appliances. The range of energy services encapsulate a utility level (e.g., lumens of light, or volume of radio play) and a duration or run time. Run times are often advertised for one or two initial battery states – with a fully-charged battery and after a typical day's solar charge. As systems get more complex and can power a diverse range of loads, the number of permutations in potential service level combinations grows exponentially. The methods described here include estimates for

a) appliances used individually in each setting (all other appliances off), and

b) specified combinations of appliances used together in specific settings.

The full-battery run time test (Annex M) includes two full-battery run times – one with only the lighting appliance(s) (on the brightest settings) and one with all appliances on with the highest settings selected, as appropriate for appliance type. This approach maps some but not all possible full-battery run time settings or appliance combinations. Combining these estimates with supporting information about the system, Annex GG describes estimates for

a) each appliance's full-battery run time used individually in each setting,

b) full-battery run times for appliances combined under an example usage profile specified by the test method, and

c) full-battery run times for appliances combined under an advertised usage (only captured if a run time combination is advertised).

The three scenarios of interest aim to cover all possible methods of advertising the DUT's full-battery run time as well as an example usage profile if no appropriate usage combination is advertised. If the DUT has only one lighting appliance and no additional appliance options, then run times described in scenarios b) and c) above cannot be estimated.

The other core output from this method is a set of similar run times describing the way the DUT can utilize a typical day's solar charge, referred to as the DUT's solar run times. The procedures in Annex GG estimate the DUT's solar run times based on efficiency values determined in the solar charge test (Annex R) for the following:

a) each appliance's solar run time used individually in each setting;

b) solar run times for appliances combined under an example usage profile specified by the test method;

c) solar run times for appliances combined under an advertised usage (only captured if a run time combination is advertised).

Estimates for the energy service are based on a conceptual model of off-grid power systems summarized in Figure GG.1. The energy pathways outlined here are the framework for estimating available service from a fully charged battery or daily patterns of solar charging and utilization.

IECNORM.COM : Click to view the full PDF of IEC TS 62257-9-5:2016 RLV
Withdrawn

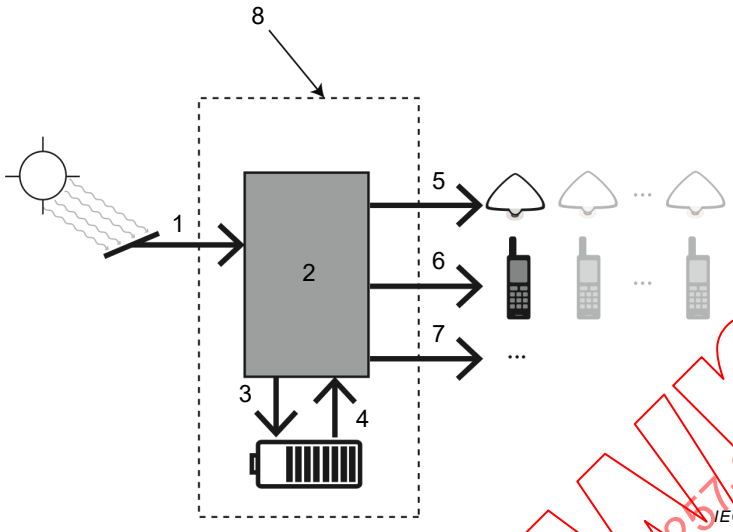

Key

1 Energy available from solar charging
2 Power control electronics
3 Energy for charging the battery
4 Energy discharge from the battery
5 Energy utilized by port 1 by one or more appliances (e.g. light point(s))
6 Energy utilized by port 2 by one or more appliances (e.g. mobile phone(s))
7 Energy utilized by other port(s) by one or more appliances
8 Bounding box for energy transformation, storage, and control elements

Figure GG.1 – Conceptual energy flow diagram for energy service estimates

The daily solar run time calculation procedure may be modified to obtain a daily electromechanical run time calculation procedure for electromechanically-charged products, referencing the electromechanical charge test (Annex P).

GG.2 Test outcomes

The test outcomes of the daily energy service calculations are listed in Table GG.1.

IECNORM.COM : Click to view the full PDF of IEC TS 62257-9-5:2016 RLV
Withdrawn

Table GG.1 – Daily energy service calculations outcomes

Metric	Reporting units	Related aspects	Remarks
Estimated full-battery run time(s) for each appliance under advertised usage	Hours (h)	n/a	Estimated full-battery run time for all advertised appliances under advertised usage with a fully-charged battery. Multiple outcomes may be found – one for each specified appliance on each independent setting.
Estimated full-battery run time(s) for each appliance under an example usage profile	Hours (h)	n/a	Estimated full-battery run time for all advertised appliances under an example usage profile with a fully-charged battery. Multiple outcomes will be found – one for each specified load on each independent setting.
Estimated full-battery run time(s) for each appliances under individual usage	Hours (h)	n/a	Estimated full-battery run time for all advertised appliances under individual usage with a fully-charged battery. Multiple outcomes will be found – one for each specified load on each independent setting.
Estimated full-battery run time fraction of a full charge an advertised mobile phone receives	Percentage (%)	n/a	Only determined for DUT's that advertise charging a mobile phone. Estimates shall be determined under advertised usage (if advertised), typical usage, and individual usage.
Daily energy available to appliances after a standard solar day	Energy (Wh)	4.2.8.2 Daily energy service	The amount of energy available to the product's appliances after charging over a standard solar day. Multiple outcomes will be found – one assuming typical load usage and another assuming the load usage advertised with the product.
Daily energy service for all specified loads under advertised usage after a standard solar day	Hours (h)	4.2.8.2 Daily energy service	Calculated for the use of all specified loads over a day based on advertised usage. Multiple outcomes may be found if multiple combinations are advertised
Daily energy service for all specified loads under an example usage profile after a standard solar day	Hours (h)	4.2.8.3 Solar-day lighting run time 4.2.8.4 Solar-day appliance run time	Calculated for the use of all specified loads over a day based on an example usage profile. Multiple outcomes will be found – one for each specified load on each independent setting
Daily energy service for all specified loads under individual usage after a standard solar day	Hours (h)	4.2.8.3 Solar-day lighting run time 4.2.8.4 Solar-day appliance run time	Calculated for the use of only one specified load over a day. Multiple outcomes will be found – one for each specified load on each independent setting
Estimated solar run time fraction of a full charge an advertised mobile phone receives	Percentage (%)	4.2.8.3 Solar-day lighting run time	Only determined for DUT's that advertise charging a mobile phone. Estimates shall be determined under advertised usage (if advertised), the example usage profile, and individual usage.

IECNORM.COM : Click to view the full PDF of IEC TS 62257-9-5:2016 RLV
Withdrawn

GG.3 Related tests

The daily energy service calculation is related to the battery test (Annex K), the solar charge test (Annex R), the assessment of DC ports (Annex EE), generic appliances (Annex HH), appliance tests (Annex FF), and full-battery run time test (Annex M).

GG.4 Procedure

GG.4.1 Full-battery run time energy service calculations

GG.4.1.1 General

Full-battery run time estimates are made for each appliance used individually, appliances used in an advertised combination, and appliances used in an example usage combination.

GG.4.1.2 Equipment requirements

No equipment is required for Annex GG since it only consists of calculations.

GG.4.1.3 Test prerequisites

This calculation shall be performed after completion of the assessment of DC ports (Annex EE), the battery test (Annex K), generic appliances (Annex HH), appliance tests (Annex FF), and the full-battery run time test (Annex M).

GG.4.1.4 Procedure

A number of input values from other test methods are required to determine the DUT's full-battery run time estimates. First identify which input values are needed for which run time estimates.

a) Identify the required input values specified in Table GG.2.

Table GG.2 – Required inputs to estimate the full-battery run time(s)

Test method	Annex	Required input
Full-battery run time	Annex M	Full-battery run time (h) Full-battery energy from battery (Wh) Average power (W)
Appliance tests	Annex FF	Power consumption measurements at typical port voltage for each appliance included with the product (W)
Generic appliances	Annex HH	Power consumption values for each appliance that is advertised but not included with the product (W) Energy capacity values for each appliance that is advertised but not included with the product (Wh)
Assessment of DC ports	Annex EE	Plots of battery-to-port efficiency vs. output power for each appliance (%) Power consumption values for each built-in or permanently connected appliance for each tested scenario (W) [a]
[a] Only required for appliances integrated into the DUT's main unit that cannot be separated for testing, other than built-in light points for which average power is determined in the full-battery run time test.		

IECNORM.COM : Click to view the full PDF of IEC TS 62257-9-5:2016 RLV
Withdrawn

b) Use the following set of guidelines below to determine the power value(s) to use for which type of appliance(s).

- For integrated appliances, use the power consumption value for the built-in or permanently connected appliance, calculated in the assessment of DC ports methods (Annex EE), or the average power from the full-battery run time test (Annex M). For built-in light points, the value from the full-battery run time test is generally more representative of typical use and should be used when available; however, the value from Annex EE may be used, for example to estimate lighting service for settings or configurations not tested in the full-battery run time test.
- For included, non-integrated appliance(s), use the power consumption measurement from the appliance tests (Annex FF).
- For non-included, advertised appliance(s) without batteries, use the power consumption value provided by the manufacturer, if provided; otherwise, reference the generic appliances annex (Annex HH).
- For non-included appliance(s) with batteries, determine the power consumed from the DUT's main battery using the formula below. When possible, use values provided by the manufacturer; otherwise, reference the generic appliances annex (Annex HH). Assume an 80 % charging efficiency for non-integrated appliances with batteries, if the value is not provided by the manufacturer.

$$P_{ab} = \frac{E_{ab}}{\eta_{cb} \cdot t_{ab}}$$

where

P_{ab} is the average power consumed by the appliance while charging from the DUT's main battery, in watts (W);

E_{ab} is the energy capacity of the appliance, in watt·hours (Wh);

η_{cb} is the charging efficiency between the DUT's main battery and the appliance's battery as a fraction;

t_{ab} is the duration of time the appliance requires to charge from the DUT's main battery to receive a full charge, in hours (h).

c) The total energy consumed from the battery is determined in the full-battery run time test (Annex M).

d) The assessment of DC ports test (Annex EE) provides three plots of the battery-to-port efficiency vs. output power for each of the DUT's DC ports. Each plot represents the DC port's behavior at a different battery state of charge – maximum, typical, and minimum. Use the power draw by each appliance, determined in step b) above, to determine the battery-to-port efficiencies at the typical battery state of charge.

e) An example usage profile is shown in Table GG.3 for possible advertised appliances. This profile is used to determine relative proportions of energy for the DUT's appliances.

Table GG.3 – Example usage profile

Appliance	Typical use per standard solar day
Light (brightest setting)	4 h
Fan	5 h
Mobile phone	1 charge [a]
Radio	3 h
TV	2 h
[a] Assume the energy required to fully charge a representative basic/feature mobile phone according to Table HH.2.	

IECNORM.COM : Click to view the full PDF of IEC TS 62257-9-5:2016 RLV
Withdrawn

Follow steps f) through i) to determine each advertised appliance's full-battery run time used individually in each setting. Advertised appliances are appliances that the DUT is advertised to power; their run times are not necessarily advertised nor are they necessarily included with the DUT.

f) Identify the power consumption by each appliance used individually referencing step b) above.

g) Identify the energy consumption by each appliance used individually referencing step c) above.

h) Identify the battery-to-appliance efficiency value for each appliance used individually referencing step d) above.

i) Determine the maximum availability (t_r) of each appliance when used individually using the power consumptions (P_a) for the appliance, determined in step f), energy consumption from the DUT's main battery by the appliance (E_l), determined in step g), and the appropriate battery-to-appliance efficiency ($\eta_{b\text{-}a}$), determined in step h). Use the following formula:

$$t_r = \frac{E_l \cdot \eta_{b\text{-}a}}{P_a}$$

where

t_r is the duration of time the appliance can be used individually, in hours (h);

E_l is the energy available from the DUT's main battery when using the appliance individually, in watt·hours (Wh);

P_a is the average power consumed by the appliance, in watts (W);

$\eta_{b\text{-}a}$ is the battery-to-appliance efficiency as a fraction.

Follow steps j) through p) to determine the full-battery run times for the advertised appliances under the example usage profile. Typical usage for appliances is based on how a customer expects to use the appliances. Table GG.3 provides an example usage profile for possible appliances and can be used to determine each appliance's relative proportion of energy allocation.

j) Identify the power consumption by the DUT's advertised appliance(s) referencing step b) above.

k) Identify the energy consumption by the DUT's advertised appliance(s) referencing step c) above.

l) Identify the battery-to-appliance efficiency value for the DUT's advertised appliance(s) referencing step d) above.

m) Determine the necessary energy from the DUT's main battery for each appliance (E_{ar}), sufficient to provide the target usage values per appliance (t_r) according to the example usage profile in Table GG.3. For each appliance, use the appropriate power consumption (P_a), determined in step j), and the appropriate battery-to-appliance efficiency ($\eta_{b\text{-}a}$), determined in step l), to find energy demand:

$$E_{ar} = \frac{P_a \cdot t_r}{\eta_{b\text{-}a}}$$

where

E_{ar} is the energy demand from the DUT's main battery to power the appliance over the specified use period, in watt·hours (Wh);

P_a is the average power consumed by the appliance, in watts (W);

t_r is the duration of time the appliance is in use, in hours (h);

$\eta_{b\text{-}a}$ is the battery-to-appliance efficiency as a fraction.

IECNORM.COM : Click to view the full PDF of IEC TS 62257-9-5:2016 RLV
Withdrawn

n) Determine the actual energy available from the DUT's battery to each appliance (E_a), either taking away or adding to the service of each appliance in proportion. The expected energy available from the battery (E_b) is parsed to each appliance's energy allocation based on the following formula:

$$E_a = E_{ar} \cdot \frac{E_b}{\sum_i E_{ar,i}}$$

where

E_a is the actual expected energy consumption used by the appliance during the full-battery run time, in watt·hours (Wh);

E_b is energy available from the battery during the full-battery run time, in watt·hours (Wh);

E_{ar} is the energy consumption by an appliance over the specified target use period, in watt·hours (Wh);

$\sum E_{ar,i}$ is the total energy consumption from all the appliances in the set over their specified use periods, in watt·hours (Wh).

o) Determine the actual duration of each appliance's service (as appropriate) using the actual energy provided from the DUT's battery to each appliance (E_a), determined in step k), the appropriate power consumption (P_a), determined in step i), and the appropriate battery-to-appliance efficiency ($\eta_{b\text{-}a}$), determined in step l).

Use the following formula for appliances without batteries:

$$t_a = \frac{E_a \cdot \eta_{b\text{-}a}}{P_a}$$

where

t_a is the actual duration of time the appliance is available for use under the specified scenario for allocating energy to a set of appliances, in hours (h);

E_a is the actual energy consumption for the appliance during the full-battery run time, in watt·hours (Wh);

P_a is the power entering the appliance, in watts (W);

$\eta_{b\text{-}a}$ is the battery-to-appliance efficiency as a fraction.

Use the following formula for all appliances with batteries except mobile phones:

$$t_a = \frac{E_a \cdot \eta_{cb}}{E_{ab}} \cdot t_{fc}$$

where

t_a is the actual duration of time the appliance is available for use under the specified scenario for allocating energy to a set of appliances, in hours (h);

E_a is the actual energy consumption for the appliance during the full-battery run time, in watt·hours (Wh);

η_{cb} is the charging efficiency between the DUT's main battery and the appliance's battery as a fraction;

E_{ab} is the energy capacity of the appliance, in watt·hours (Wh);

t_{fc} is the individual full-battery run time of the appliance when fully charged, in hours (h).

When possible, use values provided by the manufacturer for the appliance's energy capacity; otherwise, reference the generic appliances annex (Annex HH). Assume an 80 % charging efficiency for non-integrated appliances with batteries, if the value is not provided by the manufacturer. If the appliance with a battery is advertised but not included by the manufacturer, its full-battery run time shall be provided by the manufacturer. If the

IECNORM.COM : Click to view the full PDF of IEC TS 62257-9-5:2016 RLV
Withdrawn

appliance with a battery is advertised and included by the manufacturer, it is up to the discretion of the test lab to measure the appliance's full-battery run time or use the value provided by the manufacturer.

p) If a mobile phone is one of the DUT's advertised appliances, determine the fraction of full battery charges for that appliance that can be powered after a standard solar day using the following formula. Unless smartphone or tablet charging capability is specifically mentioned, use the specifications for a basic/feature mobile phone as defined in Table HH.2.

$$f_{\text{charge,mobile}} = \frac{t_{\text{ab}} \cdot P_{\text{ab}} \cdot \eta_{\text{cb}}}{E_{\text{ab}}}$$

where

$f_{\text{charge,mobile}}$ is the fraction of a full charge that a mobile phone receives after a standard solar day;

t_{ab} is the actual duration of time the mobile charging port is available for mobile charging in both day and night usage, in hours (h);

P_{ab} is the power delivered to the mobile phone, in watts (W);

η_{cb} is the charging efficiency between the DUT's main battery and the mobile phone's battery as a fraction;

E_{ab} is the energy required to fully charge a representative mobile phone, in watt·hours (Wh); specified in Table HH.2.

Repeat steps h) through p) to determine the full-battery run times for the advertised appliances combined under any advertised usage profiles or other important sets to characterize. For example, if the DUT advertises that it can power multiple appliances for specific durations with a fully-charged battery, the specific durations for the specified appliances shall be used as the usage values per appliance (t_r) in step b). All other values used will be identical to those used for the full-battery run times for the advertised appliances under the example usage profile. If the DUT does not advertise usages for multiple appliances with a fully-charged battery, then this metric cannot be determined.

GG.4.2 Solar run time energy service calculations

GG.4.2.1 General

Solar run time estimates are made for individual appliances and sets of multiple appliances. The assumptions about energy allocation and priorities mirrors those in the full-battery run time estimates. The daily energy service available over a standard solar day is determined by adding information about the solar charging circuit.

GG.4.2.2 Equipment requirements

No equipment is required for Annex GG since it only consists of calculations.

GG.4.2.3 Test prerequisites

This calculation shall be performed after completion of the solar charge test (Annex R), the assessment of DC ports (Annex EE), appliance tests (Annex FF), the battery test (Annex K), and the full-battery run time test (Annex M).

GG.4.2.4 Procedure

A number of input values from other test methods are required to determine the DUT's solar run time estimates. First identify which input values are needed for which run time estimates.

a) Identify the required input values specified in Table GG.4.

IECNORM.COM : Click to view the full PDF of IEC TS 62257-9-5:2016 RLV
Withdrawn

Table GG.4 – Required inputs to estimate the solar run time

Test method	Annex	Required input
Full-battery run time	Annex M	Lighting full-battery run time energy from battery (Wh) Average power (W)
Appliance tests	Annex FF	Power consumption measurements for each appliance included with the product (W)
Generic appliances	Annex HH	Power consumption measurements for each appliance that is advertised but not included with the product (W) Energy required for a full charge for each appliance with a battery that is advertised by not included with the product (Wh)
Assessment of DC ports	Annex EE	Plots of battery-to-port efficiency vs. output power for each appliance (%) Power consumption values for each built-in or permanently connected appliance for each tested scenario (W) [a]
Battery test	Annex K	Battery efficiency (%)
Solar charge	Annex R	Energy delivered from the PV module per day, $E_{max,sim}$ (Wh) Solar operation efficiency (%) Generator-to-battery efficiency (%)
[a] Only required for appliances integrated into the DUT's main unit that cannot be separated for testing, other than built-in light points for which average power is determined in the full-battery run time test.		

b) Follow the instructions in GG.4.1.4, step b), to determine which power consumption measurement(s) to use for which solar run time estimate.

c) An example usage profile is shown in Table GG.3 for possible advertised appliances. This profile is used to determine relative proportions of energy for the DUT's appliances.

d) The DUT's appliances can be used either while the DUT is solar charging or while it is not solar charging. This balance in appliance use has implications that derive the technical capabilities of the system to simultaneously power daytime loads and charge the battery sufficient for night-time operation. The percentage of day/night use in present a representative case for usage.

Table GG.5 – Representative case for appliance usage when solar charging

Appliance	Percentage use when not solar charging (night)	Percentage use when solar charging (day)
Light (specified setting)	100 %	0 %
Fan	75 %	25 %
Mobile	50 %	50 %
Radio	75 %	25 %
TV	75 %	25 %

e) Follow the instructions in GG.4.1.4, step d), to determine the appliances' battery-to-port charging efficiency(-ies).

Follow steps f) through q) to determine the solar run times for the advertised appliances under an example usage profile. Table GG.3 provides an example usage profile for possible appliances and can be used to determine each appliance's relative proportion of energy allocation.

f) Identify the power consumption by each appliance referencing step b) above.

g) Identify the battery-to-port efficiency value for each appliance referencing step e) above.

h) Determine the PV-to-port efficiency values for each appliance used individually as the product between the appliance's generator-to-battery efficiency determined in the solar

IECNORM.COM : Click to view the full PDF of IEC TS 62257-9-5:2016 RLV
Withdrawn

charge test (Annex R) and the appliance's battery-to-port efficiency, referencing step e) above.

$$\eta_{g\text{-}a} = \eta_{g\text{-}b} \cdot \eta_{b\text{-}a}$$

where

$\eta_{g\text{-}a}$ is the PV-to-port efficiency as a fraction;

$\eta_{g\text{-}b}$ is the generator-to-battery efficiency as a fraction;

$\eta_{b\text{-}a}$ is the battery-to-port efficiency as a fraction.

i) Use the percentages in Table GG.5 above to determine what time of the day the advertised appliances are used. It is assumed that any daytime use will occur while the DUT is solar charging.

j) Determine the necessary energy from the energy delivered to the DUT's PV socket for each appliance for both day and night usage ($E_{ar,day}$ and $E_{ar,night}$), sufficient to provide the target usage values per appliance (t_r) according to the example usage profile in Table GG.3 and use percentages in. For each appliance, use the appropriate power consumption (P_a), determined in step i), and the PV-to-port efficiency ($\eta_{PV\text{-}port}$), determined in step k), to find energy demand:

$$E_{ar,day} = \frac{P_a \cdot t_{r,day}}{\eta_{g\text{-}a}}$$

where

$E_{ar,day}$ is the energy demand from the DUT's main battery to power the appliance over the specified use period when the DUT is solar charging, in watt·hours (Wh);

P_a is the average power consumed by the appliance, in watts (W);

$t_{r,day}$ is the duration of time the appliance is in use during the day, in hours (h);

$\eta_{g\text{-}a}$ is the PV-to-port efficiency as a fraction;

and

$$E_{ar,night} = \frac{P_a \cdot t_{r,night}}{\eta_{g\text{-}a}}$$

where

$E_{ar,night}$ is the energy demand from the DUT's main battery to power the appliance over the specified use period when the DUT is not solar charging, in watt·hours (Wh);

P_a is the average power consumed by the appliance, in watts (W);

$t_{r,night}$ is the duration of time the appliance is in use during the night, in hours (h);

$\eta_{g\text{-}a}$ is the PV-to-port efficiency as a fraction.

k) Determine the maximum possible energy available from the DUT's PV socket to each appliance for both day and night usage ($E_{a,day}$ and $E_{a,night*}$), by either taking away or adding to the service of each appliance in proportion. The expected energy available from the DUT's PV socket over a standard solar day ($E_{PV,max}$) is parsed to each appliance's energy allocation based on the following formulas:

$$E_{a,day} = E_{ar,day} \cdot \frac{E_{PV,max}}{\sum_i E_{ar,i}}$$

where

$E_{a,day}$ is the actual expected energy consumption used by the appliance during the solar run time during daytime usage, in watt·hours (Wh);

IECNORM.COM : Click to view the full PDF of IEC TS 62257-9-5:2016 RLV
Withdrawn

$E_{ar,day}$ is the energy consumption by an appliance during day use over the specified target use period, in watt·hours (Wh);

$E_{PV,max}$ is energy available from the DUT's PV socket during a standard solar day, in watt·hours (Wh);

$\sum E_{ar,i}$ is the total energy consumption from all the appliances (during both day and night usage) in the set over their specified use periods, in watt·hours (Wh);

and

$$E_{a,night*} = E_{ar,night} \cdot \frac{E_{max,sim}}{\sum_i E_{ar,i}}$$

where

$E_{a,night*}$ is the energy consumption used by the appliance during the solar run time during night-time usage, not considering the DUT's battery capacity, in watt·hours (Wh);

$E_{ar,night}$ is the energy consumption by an appliance during night use over the specified target use period, in watt·hours (Wh);

$E_{max,sim}$ is energy available at the DUT's PV socket after a standard solar day, in watt·hours (Wh);

$\sum E_{ar,i}$ is the total energy consumption from all the appliances (during both day and night usage) in the set over their specified use periods, in watt·hours (Wh).

NOTE 1 The sum of the calculated energy available to the night time appliance(s) calculated above can exceed the maximum energy that the DUT's battery can supply during the night when not solar charging, hence the asterisked $E_{a,night*}$.

l) Check that the sum of the energy consumption values for the appliances during night use calculated in the above step do not exceed the amount of energy that the DUT's battery can possibly supply. Use the formula below to determine the actual energy available to the appliances during night use:

$$E_{a,night,total} = \min\left(\sum_i E_{a,night*,i}, E_{a,FBRT}\right)$$

where

$E_{a,night,total}$ is the sum of the actual energy consumption used by the appliance during the solar run time during night-time usage, in watt·hours (Wh);

$\sum E_{a,night*,i}$ is the total energy consumption used by the appliances during the solar run time during night-time usage, not considering the DUT's battery capacity, in watt·hours (Wh);

$E_{a,FBRT}$ Energy removed from the battery over the full-battery run time (maximum between the all-appliance and lighting full-battery run time results), in watt·hours (Wh).

m) Determine the actual energy available from the DUT's PV socket to each appliance for both day and night usage ($E_{a,day}$ and $E_{a,night*}$).

Use the values determined in step n) for the daytime energy usage ($E_{a,day}$).

Use the following formula to determine the night-time energy usage ($E_{a,night*}$) by either taking away or adding to the service of each appliance used at night in proportion:

$$E_{a,night} = E_{a,night,total} \cdot \frac{E_{a,FBRT}}{\sum_i E_{a,night*,i}}$$

where

IECNORM.COM : Click to view the full PDF of IEC TS 62257-9-5:2016 RLV
Withdrawn

$E_{a,night}$ is the energy consumption by an appliance over the specified target use period, in watt·hours (Wh);

$E_{a,night,total}$ is the sum of the actual energy consumption used by the appliance during the solar run time during night-time usage, in watt·hours (Wh);

$E_{a,night*}$ is the energy consumption used by the appliance during the solar run time during night-time usage, not considering the DUT's battery capacity, in watt·hours (Wh);

$E_{a,FBRT}$ Energy removed from the battery over the full-battery run time (maximum between the all-appliance and lighting full-battery run time results), in watt·hours (Wh);

$\sum E_{a,night*,i}$ is the total energy consumption from all the appliances (during only night usage), not considering the DUT's battery capacity, in the set over their specified use periods, in watt·hours (Wh).

n) Determine the total energy per solar day that the DUT can supply based on the representative usage pattern. Use the following formula:

$$E_{a,total} = \sum_i E_{a,day,i} + \sum_i E_{a,night,i}$$

where

$E_{a,total}$ is the sum of the actual energy consumption used by the appliance during the solar run time during both day and night usage, in watt·hours (Wh);

$\sum E_{a,day,i}$ is the total energy consumption from all the appliances (during only day usage), not considering the DUT's battery capacity, in the set over their specified use periods, in watt·hours (Wh);

$\sum E_{a,night,i}$ is the total energy consumption from all the appliances (during only night usage), not considering the DUT's battery capacity, in the set over their specified use periods, in watt·hours (Wh).

o) Determine the actual duration of each appliance's service (as appropriate) using the actual energy provided from the DUT's PV socket to each appliance during day and night usage ($E_{a,day}$ and $E_{a,night}$), determined in step j), the appropriate power consumption (P_a), determined in step f), and the appropriate PV-to-port efficiency ($\eta_{g\text{-}a}$), determined in step h). Use the following formulas for appliances without batteries:

$$t_{a,day} = \min\left(\frac{E_{a,day} \cdot \eta_{g\text{-}a}}{P_a}, 8\ h\right)$$

where

$t_{a,day}$ is the actual duration of time the appliance is available for use under the specified scenario for allocating energy to a set of appliances in day usage, in hours (h). It is assumed that no appliance can provide service for more than 8 h during daytime use;

$E_{a,day}$ is the actual energy consumption by the appliance during its day use after a standard solar day of charging, in watt·hours (Wh);

P_a is the power entering the appliance, in watts (W);

$\eta_{g\text{-}a}$ is the PV-to-port efficiency, as a fraction;

and

$$t_{a,night} = \frac{E_{a,night} \cdot \eta_{g\text{-}a}}{P_a}$$

where

IECNORM.COM : Click to view the full PDF of IEC TS 62257-9-5:2016 RLV
Withdrawn

$t_{a,night}$ is the actual duration of time the appliance is available for use under the specified scenario for allocating energy to a set of appliances in night usage, in hours (h);

$E_{a,night}$ is the actual energy consumption by the appliance during its night use after a standard solar day of charging, in watt·hours (Wh);

P_a is the power delivered to the appliance, in watts (W);

$\eta_{g\text{-}a}$ is the PV-to-port efficiency, as a fraction.

p) Determine the total actual duration of each appliance's service (as appropriate) using the actual energy provided from the DUT's PV socket to each appliance during both day and night usage together (E_a), using the following formula for appliances without batteries:

$$t_a = t_{a,day} + t_{a,night}$$

where

t_a is the actual duration of time the appliance is available for use under the specified scenario for allocating energy to a set of appliances in both day and night usage, in hours (h);

$t_{a,day}$ is the actual duration of time the appliance is available for use under the specified scenario for allocating energy to a set of appliances in day usage, in hours (h);

$t_{a,night}$ is the actual duration of time the appliance is available for use under the specified scenario for allocating energy to a set of appliances in night usage, in hours (h).

Use the following formula for appliances with batteries that are not mobile phones:

$$t_a = \frac{E_a \cdot \eta_{cb}}{E_{ab}} \cdot t_{fc}$$

where

t_a is the actual duration of time the appliance is available for use under the specified scenario for allocating energy to a set of appliances, in hours (h);

E_a is the actual energy consumption for the appliance during the full-battery run time, in watt·hours (Wh);

η_{cb} is the charging efficiency between the DUT's main battery and the appliance's battery as a fraction;

E_{ab} is the energy capacity of the appliance, in watt·hours (Wh);

t_{fc} is the individual full-battery run time of the appliance when fully charged, in hours (h).

When possible, use values provided by the manufacturer for the appliance's energy capacity; otherwise, reference the generic appliances annex (Annex HH). Assume an 80 % charging efficiency for non-integrated appliances with batteries, if the value is not provided by the manufacturer. If the appliance with a battery is advertised but not included by the manufacturer, its full-battery run time shall be provided by the manufacturer. If the appliance with a battery is advertised and included by the manufacturer, its to the discretion of the test lab to measure the appliance's full-battery run time or use the value provided by the manufacturer.

q) If a mobile phone is one of the DUT's advertised appliances, determine the fraction of full mobile phone charges that can be powered after a standard solar day using the following formula. Unless smartphone or tablet charging capability is specifically mentioned, use the specifications for a basic/feature mobile phone as defined in Table HH.2.

IECNORM.COM : Click to view the full PDF of IEC TS 62257-9-5:2016 RLV
Withdrawn

$$f_{\text{charge,mobile}} = \frac{t_{\text{ab}} \cdot P_{\text{ab}} \cdot \eta_{\text{cb}}}{E_{\text{ab}}}$$

where

$f_{\text{charge,mobile}}$ is the fraction of a full charge that a mobile phone receives after a standard solar day;

t_{ab} is the actual duration of time the mobile charging port is available for mobile charging in both day and night usage, in hours (h);

P_{ab} is the power delivered to the appliance, in watts (W);

η_{cb} is the charging efficiency between the DUT's main battery and the mobile phone's battery as a fraction;

E_{ab} is the energy required to fully charge a representative mobile phone, in watt·hours (Wh); specified in Table HH.2.

Repeat steps f) through q) to determine the solar run times for the advertised appliances combined under an advertised usage or other important sets to characterize. For example, if the DUT advertises that it can power multiple appliances for specific durations after a day's solar charge, the specific durations for the specified appliances shall be used as the usage values per appliance ($t_{\text{a,day}}$ and $t_{\text{a,night}}$) in step o). All other input values used will be identical to those used for the solar run times for the advertised appliances under the example usage profile. If the DUT does not advertise usages for multiple appliances after a day's solar charge, then this metric cannot be determined.

Determine each advertised appliance's solar run time when used individually in each setting. First repeat steps f) through q), then follow steps r) and s) below, and finally repeat steps r) through s) to determine the solar run times for the advertised appliances when used individually. For example, if the DUT advertises that it can power an appliance for specific durations after a day's solar charge, the specific duration for the specified appliance shall be used as the usage values per appliance ($t_{\text{a,day}}$ and $t_{\text{a,night}}$) in step o). All other input values used will be identical to those used for the solar run times for the advertised appliances under the example usage profile.

r) Determine the maximum possible energy available from the DUT's PV socket to the individually-used appliance for both day and night usage ($E_{\text{a,day}}$ and $E_{\text{a,night*}}$), by either taking away or adding to the service of each appliance in proportion. The expected energy available from the DUT's PV socket over a standard solar day ($E_{\text{PV,max}}$) is parsed to each appliance's energy allocation based on the following formulas:

$$E_{\text{a,day}} = E_{\text{ar,day}} \cdot \frac{E_{\text{PV,max}}}{E_{\text{ar,day}} + E_{\text{ar,night}}}$$

where

$E_{\text{a,day}}$ is the expected energy consumption used by the appliance during the solar run time during daytime usage, in watt·hours (Wh);

$E_{\text{ar,day}}$ is the actual energy consumption by an appliance during day use over the specified target use period, in watt·hours (Wh);

$E_{\text{PV,max}}$ is the energy available from the DUT's PV socket during a standard solar day, in watt·hours (Wh);

$E_{\text{ar,night}}$ is the energy consumption by an appliance during night use over the specified target use period, in watt·hours (Wh);

and

$$E_{\text{a,night*}} = E_{\text{ar,night}} \cdot \frac{E_{\text{max,sim}}}{E_{\text{ar,day}} + E_{\text{ar,night}}}$$

where

IECNORM.COM : Click to view the full PDF of IEC TS 62257-9-5:2016 RLV
Withdrawn

$E_{a,night*}$ is the expected energy consumption used by the appliance during the solar run time during night-time usage, not considering the DUT's battery capacity, in watt·hours (Wh);

$E_{ar,night}$ is the actual energy consumption by an appliance during night use over the specified target use period, in watt·hours (Wh);

$E_{max,sim}$ is the energy available from the DUT's PV socket during a standard solar day, in watt·hours (Wh);

$E_{ar,day}$ is the energy consumption by an appliance during day use over the specified target use period, in watt·hours (Wh).

NOTE 2 The sum of the calculated energy available to the night time appliance calculated above can exceed the maximum energy that the DUT's battery can supply during the night when not solar charging, hence the asterisked $E_{a,night*}$.

s) Check that the sum of the energy consumption values for the appliance during night use calculated in the above step does not exceed the amount of energy that the DUT's battery can possibly supply. Use the formula below to determine the actual energy available to appliance during night use:

$$E_{a,night} = \min\left(E_{a,night*}, E_{a,FBRT}\right)$$

where

$E_{a,night}$ is the actual energy consumption used by the appliance during the solar run time during night-time usage, in watt·hours (Wh);

$E_{a,night*}$ is the energy consumption used by the appliance during the solar run time during night-time usage, not considering the DUT's battery capacity, in watt·hours (Wh);

$E_{a,FBRT}$ is the energy removed from the battery over the full-battery run time (maximum between the all-appliance and lighting full-battery run time results), in watt·hours (Wh).

t) Optionally, repeat the previous steps k) through s) with an alternative solar resource. This step should be performed if the DUT's packaging or documentation explicitly advertises performance at solar resource values other than 5 kWh/m^2/day.

GG.5 Reporting

Report the following in the energy service calculations test report.

- Metadata:
  - report name;
  - procedure(s) used;
  - DUT manufacturer;
  - DUT name;
  - DUT model number;
  - DUT setting;
  - name of test laboratory;
  - approving person;
  - date of report approval.
- Results for tested DUT aspects for samples 1 through n:
  - estimated full-battery run time(s) for each appliances under advertised usage (h);
  - estimated full-battery run time(s) for each appliances under an example usage profile (h);
  - estimated full-battery run time(s) for each appliances under individual usage (h);

IECNORM.COM : Click to view the full PDF of IEC TS 62257-9-5:2016 RLV
Withdrawn

  - estimated full-battery run time fraction of a full charge an advertised mobile phone (basic/feature) receives (%);
  - estimated full-battery run time fraction of a full charge an advertised smartphone receives (%);
  - daily energy available to appliances after a standard solar day (Wh);
  - daily energy service for all specified loads under advertised usage after a standard solar day (h);
  - daily energy service for all specified loads under an example usage profile after a standard solar day (h);
  - daily energy service for all specified loads under individual usage after a standard solar day (h);
  - estimated solar run time fraction of a full charge an advertised mobile phone (basic/feature) receives;
  - estimated solar run time fraction of a full charge an advertised smartphone receives.
- Average of n sample results for each DUT aspect tested.
- Coefficient of variation of n sample results for each DUT aspect tested (%).
- DUT's rating for aspects tested, if available.
- Deviation of the average result from the DUT's rating for each aspect tested, if available (%).
- Comments:
  - individual comments, as necessary, for samples 1 through n;
  - overall comments, as necessary, for collective set of samples 1 through n.

Withdrawn
IECNORM.COM : Click to view the full PDF of IEC TS 62257-9-5:2016 RLV

Annex HH
(normative)

Generic appliances

HH.1 Background

Stand-alone lighting kits will sometimes include ports intended to power appliances such as televisions, radios, fans, and other devices. Some kits include these appliances, which can then be used in Annex EE for the assessment of DC ports test, and for the charge controller behaviour test (Annex S). When a kit does not include these appliances but does include ports which are intended to power these types of loads, the testing laboratory shall use a generic appliance (also commonly referred to as a "dummy load") to simulate these appliances during Annex EE and Annex S tests.

The test laboratory shall construct generic appliances (dummy loads) with the ability to dissipate the required power. This can be achieved with the proper use of power resistors that have been configured to attach to the output ports of a DUT's power control unit.

Values provided in Annex HH are also used as inputs in the energy service calculations (Annex GG). The energy service calculations annex includes appliances that are advertised but not included with the product; therefore, performance values for generic appliances are used when not provided by the manufacturer.

HH.2 Test outcomes

There are no test outcomes for the construction of generic appliances.

HH.3 Related tests

The generic appliances constructed in Annex HH are used in the assessment of DC ports (Annex EE), charge controller behaviour test (Annex S), and energy service calculations (Annex GG).

HH.4 Equipment requirements

The following equipment and supplies, or their equivalents, are required. Equipment and supplies shall meet the requirements in Table CC.2.

- Appropriate connectors to connect to the DUT's electrical ports to allow the use of a generic appliance constructed by the test laboratory.
- Wire, wire cutters, and wire strippers.
- Power resistors capable of providing the required resistance and power dissipation.
- Heat sinks as required by the power resistor manufacturer.
- Soldering iron and solder.
- Heat-shrink tubing and heat gun.
- Screwdrivers and/or other appropriate tools for constructing the generic appliance hardware.

IECNORM.COM : Click to view the full PDF of IEC TS 62257-9-5:2016 RLV
Withdrawn

HH.5 Procedure

Perform the following steps to construct generic appliances to simulate any appliances advertised for use with, but not included with, the DUT.

a) Determine the power (watts) of each required generic appliance without a battery from Table HH.1. If the appliance is not included in Table HH.1, use an appropriate value determined from sources including published literature, appliance data sheets, and the DUT's user documentation and packaging. Note the power values used in the test report, as well as the source(s) of values not given in Table HH.1.

Table HH.1 – Power consumption chart for generic appliances without batteries

Type of appliance	Power for a generic appliance (dummy load) W
Television – large	20
Television – small	10
Radio	5
Fan	3

b) Calculate the resistance of the required power resistor using the following formula:

$$R = \frac{V^2}{P}$$

where

R is the resistance in ohms (Ω);

V is the typical port voltage for that appliance, in volts (V);

P is the required power for the dummy load appliance, in watts (W).

c) For generic appliances with integrated batteries, determine the energy in watt·hours required to fully charge the battery and charge rate (when necessary) from Table HH.2.

Table HH.2 – Energy consumption chart for generic appliances with batteries

Type of appliance	Energy for a generic appliance with a battery Wh	Charge rate A
Television – small	10	n/a
Radio	5	n/a
(Basic/feature) mobile phone	3,7	0,45
Smartphone	5,7	1
Tablet computer	15	2
Fan	3	n/a
Torch	2	0,5

d) Obtain power resistors capable of providing the correct resistance and dissipating the required power. Configure a power resistor, or power resistor array, to be used as a generic appliance, subject to the following requirements and recommended practices.

– The generic appliance shall connect to the appropriate DUT power control unit port used for that type of appliance.

– Resistors should be attached to appropriate heat sinks if specified by the resistor manufacturer. The test laboratory shall use its best judgement to determine the appropriate design and hardware for its generic appliances. In some cases, cooling fans will be required.

IECNORM.COM : Click to view the full PDF of IEC TS 62257-9-5:2016 RLV
Withdrawn

- Use wire and connector hardware capable of handling the voltage and current of the generic appliance. The test laboratory may use, where appropriate, a port connector from another appliance included in the DUT kit by cutting off the connector on the appliance and attaching it to the generic appliance, or may use matching connectors purchased separately.
- Power resistors may be combined in series and/or parallel to achieve the required resistance. The final resistance for the generic appliance should be within 10 % of the calculated resistance from b) above.
- Variable resistors (rheostats) or electronic loads capable of dissipating the required power may be used in place of fixed power resistors.

Variable resistors are generally rated by their manufacturers according to the maximum power dissipation of the full resistance element. If a maximum current rating is not given by the component manufacturer, the minimum allowable power rating can be calculated based on the full-scale resistance:

$$P_{R\text{variable}} \geq I^2_{\text{max,port}} \cdot R_{\text{variable}}$$

where

$P_{\text{Rvariable}}$ is the maximum power rating of the variable resistor, in watts (W);

$I_{\text{max,port}}$ is the maximum current for the port, in amperes (A);

R_{variable} is the variable resistor full-scale value, in ohms (Ω).

HH.6 Reporting

In the test report, note the generic appliances constructed, the power and resistance values used, and the source of any power values not given in Table HH.1.

IECNORM.COM : Click to view the full PDF of IEC TS 62257-9-5:2016 RLV
Withdrawn

Bibliography

IEC 60896-21, *Stationary lead-acid batteries – Part 21: Valve regulated types – Methods of test*

IEC 61951-1:2013, *Secondary cells and batteries containing alkaline or other non-acid electrolytes – Portable sealed rechargeable single cells – Part 1: Nickel-cadmium*

IEC 62133, *Secondary cells and batteries containing alkaline or other non-acid electrolytes – Safety requirements for portable sealed secondary cells, and for batteries made from them, for use in portable applications*

IEC TS 62257-3, *Recommendations for renewable energy and hybrid systems for rural electrification – Part 3: Project development and management*

IEC TS 62257-12-1, *Recommendations for renewable energy and hybrid systems for rural electrification – Part 12-1: Selection of lamps and lighting appliances for off-grid electricity systems*

IEC 62509:2010, *Battery charge controllers for photovoltaic systems – Performance and functioning*

ISO 9001, *Quality management system – Requirements*

ISO/IEC 17025, *General requirements for the competence of testing and calibration laboratories*

STÜTZ, Georg, *Entwicklung eines PV-Emulators zur Nachbildung des elektrischen Verhaltens von PV-Modulen kleiner Leistung*. M.Sc. thesis, University of Kassel, 2014

United Nations, *Transport of Dangerous Goods: Manual of Tests and Criteria, Fifth Revised Edition, Section 38.3 – Lithium metal and lithium ion batteries. 2009. [Including relevant amendments in 2011 and 2013]*

USB Implementers Forum, *USB Battery Charging Specification* [online]. Revision 1.2 (including errata and ECNs through March 15, 2012). March 2012 [viewed 6 June 2016]. Available from: http://www.usb.org/developers/docs/devclass_docs/BCv1.2_070312.zip

USB Implementers Forum, *USB Battery Charging 1.2 Compliance Plan* [online]. Revision 1.0. October 2011 [viewed 6 June 2016].
Available from:
http://www.usb.org/developers/docs/devclass_docs/USB_Battery_Charging_1.2.pdf

IECNORM.COM : Click to view the full PDF of IEC TS 62257-9-5:2016 RLV
Withdrawn

Withdrawn
IECNORM.COM : Click to view the full PDF of IEC TS 62257-9-5:2016 RLV

IEC TS 62257-9-5

Edition 3.0 2016-06

TECHNICAL SPECIFICATION

colour inside

Recommendations for renewable energy and hybrid systems for rural electrification –
Part 9-5: Integrated systems – Selection of stand-alone lighting kits for rural electrification

Withdrawn
IECNORM.COM : Click to view the full PDF of IEC TS 62257-9-5:2016 RLV

IEC TS 62257-9-5:2016-06(en)

CONTENTS

FOREWORD 15
INTRODUCTION 18
1 Scope 20
2 Normative references 20
3 Terms and definitions 21
4 System limits 25
4.1 System description 25
4.1.1 Components 25
4.1.2 Component categories 26
4.1.3 Lighting parts definitions 29
4.1.4 Additional system elements 30
4.2 System measurements and observations 30
4.2.1 General 30
4.2.2 Product design, manufacture, and marketing aspects 31
4.2.3 Product durability and workmanship aspects 34
4.2.4 Lighting durability aspects 37
4.2.5 Battery performance aspects 38
4.2.6 Solar module aspects 39
4.2.7 Electrical characteristics 39
4.2.8 Performance aspects 40
4.2.9 Light output aspects 42
4.2.10 Battery-charging circuit efficiency 43
4.2.11 Self-certification aspects 43
5 Product specification 44
5.1 General 44
5.2 Applications 45
5.3 Quality assurance principles 45
5.4 Product specification framework description 46
5.4.1 General 46
5.4.2 Product specification template 46
5.4.3 Tolerances 50
5.4.4 Quality standards criteria 50
5.4.5 Warranty requirements criteria 56
6 Quality test method 56
6.1 General 56
6.2 Applications 56
6.3 Sampling requirements 56
6.4 Laboratory requirements 57
6.5 Testing requirements 57
6.6 Recommended tests programme 59
6.6.1 General 59
6.6.2 Test preparation 60
6.6.3 Batch A tests 60
6.6.4 Batch B tests 62
6.6.5 Batch C – potentially destructive tests 63
6.6.6 Report preparation 63

IECNORM.COM : Click to view the full PDF of IEC TS 62257-9-5:2016 RLV
Withdrawn

6.7 Reporting 64
7 Market check method 64
7.1 General 64
7.2 Applications 64
7.3 Sampling requirements 65
7.4 Laboratory requirements 65
7.5 Testing requirements 65
7.6 Recommended tests programme 65
7.7 Report requirements 65
8 Initial screening method 66
8.1 General 66
8.2 Applications 66
8.3 Sampling requirements 66
8.4 Laboratory requirements 66
8.5 Testing requirements 66
8.6 Recommended tests programme 68
8.7 Reporting 68
9 Accelerated verification method 69
9.1 General 69
9.2 Applications 69
9.3 Sampling requirements 70
9.3.1 General 70
9.3.2 Verification entry testing 70
9.3.3 Follow-up QTM testing 70
9.4 Laboratory requirements 71
9.5 Testing requirements 71
9.5.1 General 71
9.5.2 Verification entry testing 71
9.5.3 Follow-up QTM testing 73
9.6 Recommended tests programme 74
9.7 Report requirements 74
10 Standardized specification sheets 74
10.1 General 74
10.2 Applications 74
10.2.1 General 74
10.2.2 Guidance 74
10.2.3 Framework for SSS guidelines document 75
Annex A (informative) Recommended quality standards for off-grid lighting market support programme qualification 80
A.1 Overview 80
A.2 Test requirements 80
A.3 Product category requirements 80
A.4 Quality standards 80
A.5 Warranty and end user support requirements 82
Annex B (informative) Reserved 84
Annex C (informative) Recommended SSS guidelines 85
C.1 General 85
C.2 Qualification standards 85

IECNORM.COM : Click to view the full PDF of IEC TS 62257-9-5:2016 RLV
Withdrawn

C.3 Test result requirements 85
C.3.1 Original testing 85
C.3.2 Retesting and updates 85
C.4 Style and format 86
C.5 Reporting precision 86
C.6 Results verification 87
C.7 Section descriptions 87
C.7.1 General 87
C.7.2 Header/overall performance 87
C.7.3 General information 88
C.7.4 Performance details 89
C.7.5 Light output 90
C.7.6 Special features 90
C.7.7 Durability 90
C.7.8 Solar module details 91
C.7.9 Battery details 91
C.7.10 Marks and certifications 92
C.7.11 SSS information 92
C.8 Example sheet 93
Annex D (normative) Manufacturer self-reported information 94
D.1 Background 94
D.2 Outcomes 94
D.3 Solicited information 94
D.3.1 General 94
D.3.2 Confidential information (not released publicly) 94
D.3.3 Public information (may be released publicly) 95
D.4 Reporting 96
Annex E (normative) Product sampling 98
E.1 Background 98
E.2 Test outcomes 98
E.3 Related tests 98
E.4 Procedure 98
E.4.1 Retail sampling 98
E.4.2 Warehouse sampling 99
E.5 Reporting 100
Annex F (normative) Visual screening 101
F.1 Background 101
F.2 Test outcomes 101
F.3 Related tests 101
F.4 Procedure 101
F.4.1 Properties, features, and information 101
F.4.2 Specifications 105
F.4.3 Functionality and internal inspection 107
F.5 Reporting 109
Annex G (normative) Sample preparation 114
G.1 Background 114
G.2 Test outcomes 114
G.3 Related tests 114

IECNORM.COM : Click to view the full PDF of IEC TS 62257-9-5:2016 RLV
Withdrawn

G.4 Procedure 114
G.4.1 General 114
G.4.2 Equipment requirements 114
G.4.3 Test prerequisites 115
G.4.4 Procedure 115
G.4.5 Calculations 117
G.5 Reporting 117
Annex H (normative) Power supply setup procedure 118
H.1 Background 118
H.2 Test outcomes 118
H.3 Related tests 118
H.4 Equipment requirements 118
H.5 Setup procedure for photometric measurements and lumen maintenance tests 119
H.5.1 Test setup 119
H.5.2 DC voltage and current levels 119
H.5.3 Stabilization period 120
H.5.4 4-wire power supply measurements 121
H.5.5 Filtering electronic noise 121
H.5.6 Troubleshooting 121
H.6 Reporting 122
Annex I (normative) Light output test 123
I.1 Background 123
I.2 Test outcomes 123
I.3 Related tests 123
I.4 Luminous flux measurement techniques 124
I.4.1 General 124
I.4.2 Luminous flux measurements with an integrating sphere or goniophotometer 124
I.4.3 Luminous flux measurements using the multi-plane method 125
I.5 Correlated colour temperature (CCT) measurement 127
I.6 Colour rendering index (CRI) measurement 127
I.7 Reporting 127
Annex J (normative) Lumen maintenance test 129
J.1 Background 129
J.2 Test outcomes 129
J.3 Related tests 130
J.4 Procedure 130
J.4.1 General 130
J.4.2 Full screening 130
J.4.3 Initial screening (500 h test) 135
J.5 Calculations 136
J.6 Alternate method for testing lumen maintenance using IESNA LM-80-08 136
J.6.1 Background 136
J.6.2 Test prerequisites 136
J.6.3 Procedure 137
J.6.4 DUT preparation and LED thermocouple attachment guidelines 137
J.6.5 Calculations 137
J.7 Reporting 138

IECNORM.COM : Click to view the full PDF of IEC TS 62257-9-5:2016 RLV
Withdrawn

Annex K (normative) Battery test 140
K.1 Background 140
K.2 Test outcomes 140
K.3 Related tests 140
K.4 Procedure 140
K.4.1 General 140
K.4.2 Valve-regulated lead-acid battery test 141
K.4.3 Nickel-metal hydride battery test 143
K.4.4 Lithium-ion battery test 145
K.4.5 Lithium iron phosphate battery test 146
K.5 Reporting 147
Annex L (informative) Battery testing recommended practices 148
L.1 Background 148
L.2 Deep discharge protection specifications by battery type 148
L.3 Overcharge protection specifications by battery type 149
Annex M (normative) Full-battery run time test 150
M.1 Background 150
M.2 Test outcomes 150
M.3 Related tests 151
M.4 Procedure 151
M.4.1 Full-battery run time test 151
M.4.2 Full-battery run time test with deep discharge protection measurement 155
M.5 Reporting 156
Annex N (normative) Full discharge preparation 158
N.1 Background 158
N.2 Test outcomes 158
N.3 Related tests 158
N.4 Procedure 158
N.4.1 General 158
N.4.2 Equipment requirements 158
N.4.3 Test prerequisites 158
N.4.4 Procedure 159
N.4.5 Calculations 160
N.5 Reporting 160
Annex O (normative) Grid charge test 161
O.1 Background 161
O.2 Test outcomes 161
O.3 Related tests 161
O.4 Procedure 161
O.4.1 General 161
O.4.2 Equipment requirements 161
O.4.3 Test prerequisites 161
O.4.4 Apparatus 162
O.4.5 Procedure 162
O.4.6 Calculations 162
O.5 Reporting 162
Annex P (normative) Electromechanical charge test 164
P.1 Background 164

IECNORM.COM : Click to view the full PDF of IEC TS 62257-9-5:2016 RLV
Withdrawn

P.2 Test outcomes 164
P.3 Related tests 164
P.4 Procedure 164
P.4.1 General 164
P.4.2 Equipment requirements 164
P.4.3 Test prerequisites 164
P.4.4 Apparatus 165
P.4.5 Procedure 165
P.4.6 Calculations 165
P.5 Reporting 165
Annex Q (normative) Photovoltaic module I-V characteristics test 167
Q.1 Background 167
Q.2 Test outcomes 167
Q.3 Related tests 168
Q.4 Procedure 168
Q.4.1 Testing using IEC 61215 (all parts) 168
Q.4.2 Test programme using a solar simulator 168
Q.4.3 Outdoor photovoltaic module I-V characteristics test 169
Q.5 Reporting 173
Annex R (normative) Solar charge test 175
R.1 Background 175
R.2 Test outcomes 175
R.3 Related tests 175
R.4 Procedure 176
R.4.1 General 176
R.4.2 Test method using a resistor network 176
R.4.3 Test method using a solar array simulator (SAS) 181
R.4.4 Calculations 183
R.5 Reporting 188
Annex S (normative) Charge controller behaviour test 191
S.1 Background 191
S.2 Test outcomes 191
S.3 Related tests 192
S.4 Procedure 192
S.4.1 Active deep discharge protection test 192
S.4.2 Active overcharge protection test 194
S.4.3 Passive deep discharge protection test 197
S.4.4 Passive overcharge protection test 199
S.4.5 Standby loss measurement 201
S.5 Reporting 202
Annex T (normative) Light distribution test 203
T.1 Background 203
T.2 Test outcomes 203
T.3 Related tests 204
T.4 Approved test methods 204
T.4.1 General 204
T.4.2 Goniophotometer 208
T.4.3 Multi-plane method 208

IECNORM.COM : Click to view the full PDF of IEC TS 62257-9-5:2016 RLV
Withdrawn

T.4.4 Illuminance on a plane method 211
T.4.5 Turntable method 215
T.4.6 Illuminance on a desktop method 217
T.5 Reporting 218
Annex U (normative) Physical and water ingress protection test 223
U.1 Background 223
U.2 Test outcomes 223
U.3 Related tests 224
U.4 Procedure 224
U.4.1 General 224
U.4.2 IP testing at a laboratory that has been accredited to test according to IEC 60529 224
U.4.3 Simplified IP inspection for ingress of solid foreign objects 224
U.4.4 Simplified IP preliminary inspection for ingress of water with harmful effects 226
U.5 Reporting 228
Annex V (normative) Level of water protection 229
V.1 Background 229
V.2 Test outcomes 229
V.3 Related tests 230
V.4 Laboratory requirements 230
V.5 Procedure 230
V.5.1 General 230
V.5.2 Level of water protection for enclosure only 231
V.5.3 Level of water protection from technical aspects 231
V.5.4 Overall level of water protection 233
V.6 Reporting 234
Annex W (normative) Mechanical durability test 236
W.1 Background 236
W.2 Test outcomes 236
W.3 Related tests 237
W.4 Procedures 237
W.4.1 Drop test 237
W.4.2 Switch and connector test 238
W.4.3 Gooseneck and moving part test 239
W.4.4 Strain relief test 240
W.5 Reporting 241
Annex X (informative) Reserved 243
Annex Y (informative) Photometer box for relative luminous flux measurements 244
Y.1 Background 244
Y.2 Plans 245
Y.3 Instructions for construction 248
Annex Z (informative) Photometer tube for relative luminous flux measurements 249
Z.1 Background 249
Z.2 Plans 249
Z.3 Instructions for construction 249
Annex AA (informative) Field testing methods 250
AA.1 Background 250

IECNORM.COM : Click to view the full PDF of IEC TS 62257-9-5:2016 RLV
Withdrawn

AA.2 Test outcomes 250
AA.3 Related tests 250
AA.4 Laboratory requirements 250
AA.5 Procedures 251
AA.5.1 Full-battery run time test 251
AA.5.2 Solar run time test 252
AA.5.3 Luminous flux test 253
AA.5.4 Light distribution test 254
AA.6 Reporting 254
Annex BB (normative) Battery durability test 256
BB.1 Background 256
BB.2 Test outcomes 256
BB.3 Related tests 256
BB.4 Procedure 256
BB.4.1 Durability storage test for valve-regulated lead-acid batteries 256
BB.4.2 Durability storage test for nickel-metal hydride batteries 257
BB.4.3 Durability storage test for lithium-ion batteries 258
BB.4.4 Durability storage test for lithium iron phosphate batteries 259
BB.5 Reporting 259
Annex CC (normative) Equipment requirements 261
Annex DD (normative) Protection tests 270
DD.1 Background 270
DD.2 Test outcomes 270
DD.3 Related tests 270
DD.4 Procedure 271
DD.4.1 PV overvoltage protection test 271
DD.4.2 Miswiring protection test 273
DD.4.3 Output overload protection test 275
DD.5 Reporting 278
Annex EE (normative) Assessment of DC ports 282
EE.1 Background 282
EE.2 Test outcomes 282
EE.3 Related tests 283
EE.4 Procedure 283
EE.4.1 Preparation 283
EE.4.2 Measurement of steady-state port characteristics 284
EE.4.3 Dynamic measurement 290
EE.4.4 Summary calculations 294
EE.4.5 Pass/fail tests for functionality and truth in advertising 295
EE.5 Reporting 296
Annex FF (normative) Appliance tests 298
FF.1 Background 298
FF.2 Test outcomes 298
FF.3 Related tests 298
FF.4 Procedure 299
FF.4.1 General 299
FF.4.2 Test procedure for LED or CFL light points 299
FF.4.3 Test procedure for television sets 300

IECNORM.COM : Click to view the full PDF of IEC TS 62257-9-5:2016 RLV
Withdrawn

FF.4.4 Test procedure for radios without internal batteries 300
FF.4.5 Test procedure for fans, motor-driven appliances, and other appliances without internal batteries 301
FF.4.6 Test procedure for other appliances with internal batteries 302
FF.5 Appliance operating voltage range test procedure 303
FF.5.1 General 303
FF.5.2 Equipment requirements 304
FF.5.3 Procedure for appliances without internal batteries 304
FF.5.4 Procedure for appliances with internal batteries 304
FF.6 Reporting 305
Annex GG (normative) Energy service calculations 307
GG.1 Background 307
GG.2 Test outcomes 308
GG.3 Related tests 310
GG.4 Procedure 310
GG.4.1 Full-battery run time energy service calculations 310
GG.4.2 Solar run time energy service calculations 314
GG.5 Reporting 321
Annex HH (normative) Generic appliances 323
HH.1 Background 323
HH.2 Test outcomes 323
HH.3 Related tests 323
HH.4 Equipment requirements 323
HH.5 Procedure 324
HH.6 Reporting 325
Bibliography 326

Figure 1 – Fixed indoor components – Example 27
Figure 2 – Fixed outdoor components with an indoor light point – Example 27
Figure 3 – Portable separate components – Example 28
Figure 4 – Portable integrated components – Example 28
Figure 5 – Division of a lighting kit into subsystems – Illustrative example 30
Figure 6 – The two components of a product specification 44
Figure 7 – Recommended sequence of testing for QTM 60
Figure 8 – First portion of example SSS 78
Figure 9 – Last (second) portion of example SSS 79
Figure H.1 – 4-wire test configuration with input filter capacitors 119
Figure I.1 – Conceptual schematic of the light output test setup, including the 11 × 11 grid, Cartesian coordinate axes for rotation reference, and the DUT 126
Figure J.1 – Schematic of a photometer tube 131
Figure J.2 – Example lumen maintenance plot 139
Figure M.1 – Interior view of photometer box with suspended light 152
Figure M.2 – Plot of example results from the full-battery run time test 154
Figure Q.1 – PV module I-V curve testing rack 170
Figure R.1 – Schematic of the power supply and DUT connection for the solar charge efficiency test 178
Figure R.2 – Example "true" and simulated I-V curves plotted with the deviation ratio 180

IECNORM.COM : Click to view the full PDF of IEC TS 62257-9-5:2016 RLV
Withdrawn

Figure R.3 – Example plots of current vs. time for four different DUT batteries. 185
Figure R.4 – Example time series plot of the solar charging cycle showing the maximum power available from the PV simulator, actual power supplied by the PV simulator, and power delivered to the batteries 189
Figure R.5 – Example time series plot of the solar charging cycle showing the instantaneous battery-charging circuit efficiency and solar operation efficiency 190
Figure S.1 – Schematic of the DC power supply-DUT connection using a series protection resistor 195
Figure T.1 – Horizontal plane for determining FWHM angle and radial illuminance distribution, for an omnidirectional light point 206
Figure T.2 – Horizontal plane for determining FWHM angle and radial illuminance distribution, for a directed light point 207
Figure T.3 – Radial illuminance distributions for two example DUTs, showing the calculation of the FWHM angle 211
Figure T.4 – Schematic of a task light suspended above an illuminance meter 212
Figure T.5 – Schematic of turntable setup, with the DUT shown 216
Figure T.6 – Side view of desktop light measuring setup 217
Figure T.7 – Example plot of usable area as a function of minimum illuminance 220
Figure T.8 – Example of resulting surface plot of light distribution from the brightest "face" of the multi-plane method or illuminance on a plane method 221
Figure T.9 – Example of resulting polar plot of illuminance from the multi-plane or turntable method 222
Figure U.1 – Side view of the apparatus for testing a DUT's external solar module for protection against water ingress 227
Figure W.1 – Three-dimensional Cartesian coordinate system for drop test reference 238
Figure W.2 – Cable strain angle (γ) schematics for a PV module junction box (left) and a separate light point (right) 241
Figure Y.1 – Interior view of completed photometer box 244
Figure Y.2 – Exterior view of completed photometer box 245
Figure Y.3 – Photometer box dimensions 246
Figure Y.4 – Photometer box assembly pieces and list of materials 247
Figure Z.1 – Completed photometer tube 249
Figure EE.1 – Schematic of the DUT with DC port and USB port and variable resistors connected for the measurement of steady-state port characteristics 286
Figure EE.2 – Example of the plots of port characteristics 290
Figure EE.3 – Schematic of the DUT with DC port and USB port and variable resistors connected for the dynamic measurement 292
Figure EE.4 – Illustration of stepped current waveform for procedure 2 294
Figure EE.5 – Example time series plot of voltage and current showing the transients 294
Figure EE.6 – Typical configuration of USB port for special charger 296
Figure GG.1 – Conceptual energy flow diagram for energy service estimates 308

Table 1 – Applications of product specifications 45
Table 2 – Qualification as separate PV module 47
Table 3 – Truth-in-advertising tolerance 47
Table 4 – Safety and durability standards 48
Table 5 – End user support standards 49

IECNORM.COM : Click to view the full PDF of IEC TS 62257-9-5:2016 RLV
Withdrawn

Table 6 – End user support requirements 49
Table 7 – Truth-in-advertising criteria for quality standards 51
Table 8 – Remarks on common truth-in-advertising aspects 52
Table 9 – Safety and durability criteria for quality standards 53
Table 10 – Recommended level of water protection by product category 55
Table 11 – End user support criteria for quality standards 55
Table 12 – Criteria for warranty standards 56
Table 13 – Applications of product specifications 56
Table 14 – QTM testing requirements 57
Table 15 – Applications of MCM results 65
Table 16 – Applications of product specifications 66
Table 17 – ISM testing requirements 67
Table 18 – Applications of AVM results 70
Table 19 – AVM verification entry testing requirements 72
Table 20 – Applications of product specifications 74
Table 21 – Recommended precision requirements for metrics on a continuous scale 76
Table A.1 – Qualification as separate PV module 80
Table A.2 – Truth-in-advertising tolerance 81
Table A.3 – Safety and durability standards 81
Table A.4 – End user support requirements 83
Table C.1 – Requirements for retesting to update SSS 85
Table C.2 – Recommended precision requirements for metrics on a continuous scale 87
Table C.3 – Elements in the header/overall performance SSS section 88
Table C.4 – Elements in the general information SSS section 89
Table C.5 – Elements in the performance details section 89
Table C.6 – Elements in the light output SSS section 90
Table C.7 – Elements in the special features SSS section 90
Table C.8 – Elements in the durability SSS section 91
Table C.9 – Elements in the solar module details SSS section 91
Table C.10 – Elements in the battery details SSS section 92
Table C.11 – Elements in the marks and certifications SSS section 92
Table C.12 – Elements in the SSS information section 93
Table D.1 – Manufacturer self-reported information outcomes 94
Table E.1 – Product sampling outcomes 98
Table F.1 – Visual screening test outcomes 101
Table G.1 – Recommended minimum conductor sizes for copper wire 115
Table H.1 – Power supply setup test outcome 118
Table H.2 – Standard operating voltage for several common battery types 120
Table H.3 – Voltage and current reporting requirements 122
Table I.1 – Light output test outcomes 123
Table J.1 – Lumen maintenance test outcomes 130
Table J.2 – Lumen maintenance test minimum frequency of measurement for full screening test 132

IECNORM.COM : Click to view the full PDF of IEC TS 62257-9-5:2016 RLV
Withdrawn

Table J.3 – Lumen maintenance test minimum frequency of measurement for Initial screening test 135
Table K.1 – Battery test outcomes 140
Table K.2 – Recommended battery testing specifications according to battery chemistry 141
Table L.1 – Recommended battery deep discharge protection voltage specifications according to battery chemistry 149
Table L.2 – Recommended battery overcharge protection voltage and temperature specifications according to battery chemistry 149
Table M.1 – Full-battery run time test outcomes 151
Table O.1 – Grid charge test outcomes 161
Table P.1 – Mechanical charge test outcomes 164
Table Q.1 – Outdoor photovoltaic module I-V characteristics test outcomes 167
Table R.1 – Solar charge test outcome 175
Table R.2 – Simulated solar day power supply settings 181
Table S.1 – Charge controller behaviour test outcomes 191
Table T.1 – Light distribution test outcomes 204
Table T.2 – Summary of testing options for characterizing lamp distributions 205
Table T.3 – Table of example illuminance measurements on the brightest "face" of the 1 m^2 grid and usable area as a function of minimum illuminance 219
Table U.1 – Water exposure and physical ingress protection test outcomes 223
Table V.1 – Water exposure and physical ingress protection test outcomes 230
Table V.2 – Enclosure-only level of water protection requirements 231
Table V.3 – Technical level of water protection requirements 231
Table V.4 – Example detailed assessment supporting technical level of water protection 233
Table V.5 – Overall level of water protection requirements 234
Table W.1 – Mechanical durability test outcomes 236
Table AA.1 – Field test outcomes 250
Table AA.2 – Example run time test datasheet 252
Table BB.1 – Battery durability test outcomes 256
Table CC.1 – Symbols used in test method column of Table CC.2 261
Table CC.2 – Specifications for all required test equipment 262
Table DD.1 – Protection test outcomes 270
Table DD.2 – Allowable port voltage limit by nominal voltage 272
Table DD.3 – Example table of PV overvoltage test results 280
Table DD.4 – Example table of miswiring protection test results 281
Table EE.1 – DC ports assessment outcomes. 282
Table EE.2 – Current pairs for dynamic test 293
Table FF.1 – Appliance power consumption test outcomes 298
Table FF.2 – Example table of nominal operating voltage, measured voltage, measured current, and calculated power. 306
Table GG.1 – Daily energy service calculations outcomes 309
Table GG.2 – Required inputs to estimate the full-battery run time(s) 310
Table GG.3 – Example usage profile 311

IECNORM.COM : Click to view the full PDF of IEC TS 62257-9-5:2016 RLV
Withdrawn

Table GG.4 – Required inputs to estimate the solar run time 315
Table GG.5 – Representative case for appliance usage when solar charging 315
Table HH.1 – Power consumption chart for generic appliances without batteries 324
Table HH.2 – Energy consumption chart for generic appliances with batteries 324

Withdrawn
IECNORM.COM : Click to view the full PDF of IEC TS 62257-9-5:2016 RLV

INTERNATIONAL ELECTROTECHNICAL COMMISSION

_____

RECOMMENDATIONS FOR RENEWABLE ENERGY AND HYBRID SYSTEMS FOR RURAL ELECTRIFICATION –

Part 9-5: Integrated systems – Selection of stand-alone lighting kits for rural electrification

FOREWORD

1) The International Electrotechnical Commission (IEC) is a worldwide organization for standardization comprising all national electrotechnical committees (IEC National Committees). The object of IEC is to promote international co-operation on all questions concerning standardization in the electrical and electronic fields. To this end and in addition to other activities, IEC publishes International Standards, Technical Specifications, Technical Reports, Publicly Available Specifications (PAS) and Guides (hereafter referred to as "IEC Publication(s)"). Their preparation is entrusted to technical committees; any IEC National Committee interested in the subject dealt with may participate in this preparatory work. International, governmental and non-governmental organizations liaising with the IEC also participate in this preparation. IEC collaborates closely with the International Organization for Standardization (ISO) in accordance with conditions determined by agreement between the two organizations.
2) The formal decisions or agreements of IEC on technical matters express, as nearly as possible, an international consensus of opinion on the relevant subjects since each technical committee has representation from all interested IEC National Committees.
3) IEC Publications have the form of recommendations for international use and are accepted by IEC National Committees in that sense. While all reasonable efforts are made to ensure that the technical content of IEC Publications is accurate, IEC cannot be held responsible for the way in which they are used or for any misinterpretation by any end user.
4) In order to promote international uniformity, IEC National Committees undertake to apply IEC Publications transparently to the maximum extent possible in their national and regional publications. Any divergence between any IEC Publication and the corresponding national or regional publication shall be clearly indicated in the latter.
5) IEC itself does not provide any attestation of conformity. Independent certification bodies provide conformity assessment services and, in some areas, access to IEC marks of conformity. IEC is not responsible for any services carried out by independent certification bodies.
6) All users should ensure that they have the latest edition of this publication.
7) No liability shall attach to IEC or its directors, employees, servants or agents including individual experts and members of its technical committees and IEC National Committees for any personal injury, property damage or other damage of any nature whatsoever, whether direct or indirect, or for costs (including legal fees) and expenses arising out of the publication, use of, or reliance upon, this IEC Publication or any other IEC Publications.
8) Attention is drawn to the Normative references cited in this publication. Use of the referenced publications is indispensable for the correct application of this publication.
9) Attention is drawn to the possibility that some of the elements of this IEC Publication may be the subject of patent rights. IEC shall not be held responsible for identifying any or all such patent rights.

The main task of IEC technical committees is to prepare International Standards. In exceptional circumstances, a technical committee may propose the publication of a Technical Specification when

- the required support cannot be obtained for the publication of an International Standard, despite repeated efforts, or
- the subject is still under technical development or where, for any other reason, there is the future but no immediate possibility of an agreement on an International Standard.

Technical Specifications are subject to review within three years of publication to decide whether they can be transformed into International Standards.

IEC 62257-9-5, which is a Technical Specification, has been prepared by IEC technical committee 82: Solar photovoltaic energy systems.

IECNORM.COM : Click to view the full PDF of IEC TS 62257-9-5:2016 RLV
Withdrawn

This third edition cancels and replaces the second edition issued in 2013. It constitutes a technical revision.

This edition includes the following significant technical changes with respect to the previous edition:

a) The battery test methods have been updated to harmonize with existing IEC standards, add safety guidance, and remove test methods for nickel-cadmium batteries (as proper disposal options are not available in many communities).

b) The sequence of testing has been changed to allow the battery to be charged using the product's charge controller prior to the full-battery run time test.

c) Limits on total series resistance of the test apparatus have been added to test procedures.

d) Language has been added throughout to facilitate the testing of systems with appliances, including non-lighting appliances such as radios.

e) An alternative lumen maintenance test procedure using IESNA LM80-08 test data has been added.

f) Methods have been added for testing water and physical ingress protection for photovoltaic modules.

g) Procedures have been added for powering light points directly from a power supply during the lumen maintenance, light output, and light distribution tests.

h) Equipment requirements and recommended equipment specifications have been consolidated into the new Annex CC.

i) New optional test methods have been added to assess robustness to faults (Annex DD), characterize DC ports (Annex EE) and appliances (Annex FF), and synthesize test results to estimate the energy service capabilities and evaluate advertising claims for systems with multiple appliances (Annex GG).

This part of IEC 62257 is to be used in conjunction with the IEC 62257 (all parts).

The text of this Technical Specification is based on the following documents:

Enquiry draft	Report on voting
82/1051/DTS	82/1115/RVC

Full information on the voting for the approval of this Technical Specification can be found in the report on voting indicated in the above table.

This publication has been drafted in accordance with the ISO/IEC Directives, Part 2.

A list of all parts in the IEC 62257 series, published under the general title *Recommendations for renewable energy and hybrid systems for rural electrification*, can be found on the IEC website.

Future standards in this series will carry the new general title as cited above. Titles of existing standards in this series will be updated at the time of the next edition.

IECNORM.COM : Click to view the full PDF of IEC TS 62257-9-5:2016 RLV
Withdrawn

The committee has decided that the contents of this publication will remain unchanged until the stability date indicated on the IEC web site under "http://webstore.iec.ch" in the data related to the specific publication. At this date, the publication will be

- transformed into an International standard,
- reconfirmed,
- withdrawn,
- replaced by a revised edition, or
- amended.

A bilingual version of this publication may be issued at a later date.

IMPORTANT – The 'colour inside' logo on the cover page of this publication indicates that it contains colours which are considered to be useful for the correct understanding of its contents. Users should therefore print this document using a colour printer.

Withdrawn
IECNORM.COM : Click to view the full PDF of IEC TS 62257-9-5:2016 RLV

INTRODUCTION

IEC 62257 (all parts) provides support and strategies for and institutions involved in rural electrification projects. It documents technical approaches for designing, building, testing, and maintaining off-grid renewable energy and hybrid systems with AC nominal voltage below 500 V, DC nominal voltage below 750 V and nominal power below 100 kVA.

These documents are recommendations to support buyers who want to connect with good quality options in the market:

- to choose the right system for the right place,
- to design the system, and
- to operate and maintain the system.

These documents are focused only on technical aspects of rural off-grid electrification concentrating on, but not specific to, developing countries. They are not considered as all inclusive to rural electrification. The documents do not describe a range of factors that can determine project or product success: environmental, social, economic, service capabilities, and others.

Further developments in this field could be introduced in future steps.

This consistent set of documents is best considered as a whole with different parts corresponding to items for safety, sustainability of systems, and costs. The main objectives are to support the capabilities of households and communities that use small renewable energy and hybrid off-grid systems and inform organizations and institutions in the off-grid power market.

The purpose of this part of IEC 62257 is to specify quality assurance strategies for stand-alone lighting kits, including product specifications, tests, and a standardized specification sheet format. In addition to supporting the selection of products by project developers and implementers, quality assurance can help market support organizations, manufacturers, and governments achieve the goals they have for off-grid lighting projects.

The intended users of this part of IEC 62257 are listed below. In some clauses and subclauses of this part of IEC 62257, a description of the application of the subclause contents is offered to help provide context for each type of user.

a) Market support programmes are programmes that support the off-grid lighting market with financing, consumer education, awareness, and other services. Market support programmes often use quality assurance to qualify for access to services such as:
   - greenhouse gas reduction certifications or other incentives,
   - access to financing (trade or consumer finance),
   - use of a buyer seal and certification (government or non-governmental institutional backing, consumer or "business to business" seals),
   - participation in a public product information database (e.g. standardized specification sheets),
   - access to a business network or trade group,
   - business support and development services,
   - access to market intelligence, and
   - participation in consumer awareness campaigns.

b) Manufacturers and distributors need to verify the quality and performance of products from different batches and potential business partners. Manufacturers and distributors often use quality assurance plans or requirements to:

IECNORM.COM : Click to view the full PDF of IEC TS 62257-9-5:2016 RLV
Withdrawn

  - support quality control processes at a manufacturing plant or upon receipt of goods from a contract manufacturer, and
  - choose products to distribute.

c) Bulk procurement programmes facilitate or place large orders for devices from a distributor or manufacturer. Bulk procurement programmes may use quality assurance to:
  - provide devices to a particular, relatively small group of end users whose needs are understood (e.g., project developers and implementers for an electrification project may include quality assurance requirements in the GS of an electrification project (see IEC TS 62257-3)), and
  - organize a subsidy, buy-down, or giveaway programme that will serve a broad set of users.

d) Trade regulators are typically government policymakers and officials who craft and implement trade and tax policy. Regulators may use quality assurance requirements to:
  - qualify for exemption from tax or duties, and
  - establish requirements for customs.

This part of IEC 62257 establishes the framework for creating a product specification, the basis for evaluating quality for a particular context. Product specifications include minimum requirements for quality standards and warranty requirements. Products are compared to specifications based on test results and other information about the product. The product specification framework is flexible and can accommodate the goals of diverse organizations and institutions.

There is a range of tests outlined in this part of IEC 62257; some are simple enough to be completed in the field by project developers while others require laboratory equipment. The tests and inspections are designed to be widely applicable across different markets, countries, and regions.

Standardized specification sheets are also defined that can be used to communicate the test results. Combined with a set of product specifications, the information in the standardized specification sheet can inform the use of a quality and/or performance label.

IECNORM.COM : Click to view the full PDF of IEC TS 62257-9-5:2016 RLV
Withdrawn

RECOMMENDATIONS FOR RENEWABLE ENERGY AND HYBRID SYSTEMS FOR RURAL ELECTRIFICATION –

Part 9-5: Integrated systems – Selection of stand-alone lighting kits for rural electrification

1 Scope

This part of IEC 62257, which is a Technical Specification, applies to stand-alone rechargeable electric lighting appliances or kits that can be installed by a typical user without employing a technician.

This part of IEC 62257 presents a quality assurance framework that includes product specifications (a framework for interpreting test results), test methods, and standardized specification sheets (templates for communicating test results).

2 Normative references

The following documents, in whole or in part, are normatively referenced in this document and are indispensable for its application. For dated references, only the edition cited applies. For undated references, the latest edition of the referenced document (including any amendments) applies.

IEC 60529, *Degrees of protection provided by enclosures (IP Code)*

IEC 60891:2009, *Photovoltaic devices – Procedures for temperature and irradiance corrections to measured I-V characteristics*

IEC 60904-1:2006, *Photovoltaic devices – Part 1: Measurement of photovoltaic current-voltage characteristics*

IEC 61056-1:2012, *General purpose lead-acid batteries (valve-regulated types) – Part 1: General requirements, functional characteristics – Methods of test*

IEC 61215 (all parts), *Terrestrial photovoltaic (PV) modules – Design qualification and type approval*

IEC 61427-1:2013, *Secondary cells and batteries for renewable energy storage – General requirements and methods of test – Part 1: Photovoltaic off-grid application*

IEC 61672-1, *Electroacoustics – Sound level meters – Part 1: Specifications*

IEC 61951-2:2011, *Secondary cells and batteries containing alkaline or other non-acid electrolytes – Portable sealed rechargeable single cells – Part 2: Nickel-metal hydride*

IEC 61960:2011, *Secondary cells and batteries containing alkaline or other non-acid electrolytes – Secondary lithium cells and batteries for portable applications*

IEC 62087-1:2015, *Audio, video, and related equipment – Determination of power consumption – Part 1: General*

IECNORM.COM : Click to view the full PDF of IEC TS 62257-9-5:2016 RLV
Withdrawn

IEC 62087-2:2015, *Audio, video, and related equipment – Determination of power consumption – Part 2: Signals and media*

IEC 62087-3:2015, *Audio, video, and related equipment – Determination of power consumption – Part 3: Television sets*

CIE 15:2004, *Colorimetry*

CIE 084, *The measurement of luminous flux*

CIE 13.3, *Method of measuring and specifying colour rendering properties of light sources*

CIE 127, *Measurement of LEDs*

CIE 177, *Colour rendering of white LED light sources*

IESNA LM-78-07, *IESNA approved method for total luminous flux measurement of lamps using an integrating sphere photometer*

IESNA LM-79-08, IES approval method for *electrical and photometric measurements of solid state lighting products*

IESNA LM-80-08, *Approved method: measuring lumen maintenance of LED light sources*

3 Terms and definitions

For the purposes of this document, the following terms and definitions apply.

3.1
illuminance
illuminance of an elementary surface
E
luminous flux received by an elementary surface divided by the area of this surface

Note 1 to entry: In the SI system of units, illuminance is expressed in lux (lx) or lumens per square metre (lm/m^2).

[SOURCE: IEC 60050-723:1997, 723-08-30]

3.2
capacity
capacity of a cell or a battery
electric charge which a cell or battery can deliver under specified discharge conditions

Note 1 to entry: The SI unit for electric charge, or quantity of electricity, is the coulomb (1 C = 1 A·s) but in practice, capacity is usually expressed in ampere hours (Ah).

[SOURCE: IEC 60050-482:2004, 482-03-14]

3.3
device under test
DUT
particular sample that is being measured or observed

[SOURCE: IEC 62257-12-1:2015, 3.29]

IECNORM.COM : Click to view the full PDF of IEC TS 62257-9-5:2016 RLV
Withdrawn

3.4
life
life of a lamp
total time for which a lamp has been operated before it becomes useless, or is considered to be so according to specified criteria

Note 1 to entry: Lamp life is usually expressed in hours.

[SOURCE: IEC 60050-845:1987, 845-07-61]

3.5
lux
illuminance produced on a surface of area 1 square metre by a luminous flux of 1 lumen uniformly distributed over that surface

Note 1 to entry: Lux is the SI unit of illuminance.

[SOURCE: IEC 60050-845:1987, 845-01-52, modified – The formula has been omitted, and the note has been replaced by a new note to entry.]

3.6
colour rendering index
CRI
measure of the degree to which the psychophysical colour of an object illuminated by the test illuminant conforms to that of the same object illuminated by the reference illuminant, suitable allowance having been made for the state of chromatic adaptation

[SOURCE: IEC 60050-845:1987, 845-02-61, modified – The symbol "R" has been replaced by "CRI" and the note has been omitted.]

3.7
correlated colour temperature
CCT
temperature of the Planckian radiator whose perceived colour most closely resembles that of a given stimulus at the same brightness and under specified viewing conditions

Note 1 to entry: The correlated colour temperature is expressed in kelvin (K).

[SOURCE: IEC 60050-845:1987, 845-03-50, modified – Notes 1 and 2 have been replaced by a new note to entry.]

3.8
full width half maximum
FWHM
range of a variable over which a given characteristic is greater than 50 % of its maximum value

Note 1 to entry: FWHM may be applied to characteristics such as radiation patterns, spectral linewidths, etc., and the variable may be wavelength, spatial or angular properties, etc., as appropriate.

[SOURCE: IEC 60050-731:1991, 731-01-57]

3.9
ampere
A
SI unit of electric current, equal to the direct current which, if maintained constant in two straight parallel conductors of infinite length, of circular cross-section with negligible area, and placed 1 metre apart in vacuum, would produce between these conductors a force per length equal to 2×10^{-7} N/m

IECNORM.COM : Click to view the full PDF of IEC TS 62257-9-5:2016 RLV
Withdrawn

Note 1 to entry: CGPM definition is as follows: "The ampere is that constant current which, if maintained in two straight parallel conductors of infinite length, of negligible circular cross-section, and placed 1 metre apart in vacuum, would produce between these conductors a force equal to 2×10^{-7} newton per metre of length."

[SOURCE: IEC 60050-112:2010, 112-02-07]

3.10
multimeter
multi-range multi-function measuring instrument intended to measure voltage, current and sometimes other electrical quantities such as resistance

[SOURCE: IEC 60050-312:2001, 312-02-24]

3.11
ammeter
instrument intended to measure the value of a current

[SOURCE: IEC 60050-313:2001, 313-01-01]

3.12
voltmeter
instrument intended to measure the value of a voltage

[SOURCE: IEC 60050-313:2001, 313-01-03]

3.13
illuminance meter
instrument for measuring illuminance

[SOURCE: IEC 60050-845:1987, 845-05-16]

3.14
photometer
instrument for measuring light

[SOURCE: IEC 60050-845:1987, 845-05-15, modified – The term "photometric quantities" has been replaced by "light".]

3.15
pyranometer
instrument for measuring incident global (direct-beam and diffuse) solar radiation

3.16
integrating sphere
hollow sphere whose internal surface is a diffuse reflector, as non-selective as possible.

Note 1 to entry: An integrating sphere is used frequently with a radiometer or photometer.

Note 2 to entry: An integrating sphere is used to determine the total luminous flux (lumen output) of a lighting device.

[SOURCE: IEC 60050-845:1987, 845-05-24, modified – A second note to entry has been added.]

3.17
goniophotometer
photometer for measuring the directional light distribution characteristics of sources, luminaires, media or surfaces

Withdrawn
IECNORM.COM : Click to view the full PDF of IEC TS 62257-9-5:2016 RLV

[SOURCE: IEC 60050-845:1987, 845-05-22]

3.18
power supply
electric energy converter which draws electric energy from a source and supplies it in a specified form to a load

[SOURCE: IEC 60050-151:2001, 151-13-76]

3.19
overvoltage protection
protection intended to operate when the power system voltage is in excess of a predetermined value

[SOURCE: IEC 60050-448:1995, 448-14-32]

3.20
IP class
IP rating
degree of protection provided by enclosures for electrical equipment against penetration by foreign bodies and dust/water

Note 1 to entry: IP means "ingress protection".

3.21
portable
connected in a way that makes a product or subsystem easy for an individual to carry

Note 1 to entry: Products or subsystems are portable when two or more of the main components (energy source, energy storage, and light source) are connected in this way.

3.22
fixed
designed for permanent or semi-permanent mounting and use in place

Note 1 to entry: Products or subsystems are fixed when the main components (energy source, energy storage, and light source) are designed in this way.

3.23
separate
without solar module or with a solar module connected to other components via a cable that is sufficiently long to allow the solar module to collect energy outdoors while the other product components remain indoors

3.24
integrated
with a solar module integrated into the same casing as the other components or connected to other components via a cable that is too short to allow the solar module to collect energy outdoors while the other product components remain indoors

3.25
metadata
information that relates a test result to a specific sample and provides context about the result (e.g. specific test method used)

3.26
light emitting diode
LED
solid state device embodying a p-n junction, emitting optical radiation when excited by an electric current

IECNORM.COM : Click to view the full PDF of IEC TS 62257-9-5:2016 RLV
Withdrawn

[SOURCE: IEC 60050-845: 1987, 845-04-40]

3.27
low-voltage disconnect
LVD
battery voltage at which the load terminals of the charge controller are switched off to prevent the battery from over discharging

Note 1 to entry: This is a specific case of a "load disconnect point" as defined by IEC 62509:2010, 3.11.

3.28
standby loss
quantity of electricity (electric charge), expressed as a fraction of the total battery capacity, drawn from a product's battery with the product switched off over a specific length of time

3.29
compact fluorescent lamp
CFL
discharge lamp of the low pressure mercury type in which most of the light is emitted by one or several layers of phosphors excited by the ultraviolet radiation from the discharge, typically self-ballasted with a tube that is wound in a spiral or arched shape to make it "compact" as opposed to linear fluorescent lamps

3.30
pink noise
noise whose power spectral density is inversely proportional to frequency

3.31
standard operating voltage
standardized voltage corresponding to a typical battery operating point during discharge

3.32
typical port voltage
voltage present at a port with a standardized typical load and battery operating voltage

3.33
coefficient of variation
ratio of the standard deviation to the mean

4 System limits

4.1 System description

4.1.1 Components

A stand-alone lighting kit typically comprises:

- The main components:
  - an energy source:
    a) solar photovoltaic module (integrated, supported by or completely separate from the casing),
    b) electromechanical charger (hand crank, pedal power, or other), and/or
    c) general DC power input (normally used with a central charging station or AC-DC converters to charge via grid power).
  - one or several light sources (typically CFL or LED),
  - battery/batteries, and

IECNORM.COM : Click to view the full PDF of IEC TS 62257-9-5:2016 RLV
Withdrawn

  - loads (optional), such as appliances (lighting, television, radio, fan, etc.), and load adapter cables (e.g. for mobile phones).
- The enclosure and other components:
  - casing or several casings (including some translucent parts in many cases),
  - circuits (battery charge and discharge controller, regulated voltage and current sources),
  - wiring to connect the circuits to each other and the main components,
  - fasteners to secure components in the casings,
  - switches for light control/selection,
  - cables and connectors,
  - protective devices,
  - status indicators/user feedback,
  - accessories (auxiliary power outlet, mobile phone charging or other appliance interface, radio, fan, TV, etc.), and/or
  - hardware for mounting.

4.1.2 Component categories

Components of stand-alone lighting kits can be placed into one of four categories based on the arrangement of components. The four categories are fixed indoor, fixed outdoor, portable separate, and portable integrated. It is important to categorize them because they have different inherent utility to the user and will encounter different environmental conditions based on their design.

Different quality standards may apply to different categories.

Each kit can contain components from multiple categories. Appliances included with the kit may also be categorized according to this same system.

The first word in each category name refers to the portability of the system.

- Fixed components are designed for permanent or semi-permanent mounting and use in place.
- Portable components are inherently portable and generally contain an internal energy source. For example, a stand-alone lighting kit can be a portable component with the light source and battery permanently or temporarily joined.

Fixed components are further classified based on the expected use location:

a) Fixed indoor components are not inherently portable and are used indoors. If a fixed indoor component is connected to a component that is intended to be used outdoors (such as a PV module), the cable connecting the two components shall be sufficiently long to place the outdoor component outdoors in an appropriate location while the indoor component remains indoors. Otherwise, the fixed outdoor category shall apply. See Figure 1 for an example.

IECNORM.COM : Click to view the full PDF of IEC TS 62257-9-5:2016 RLV
Withdrawn

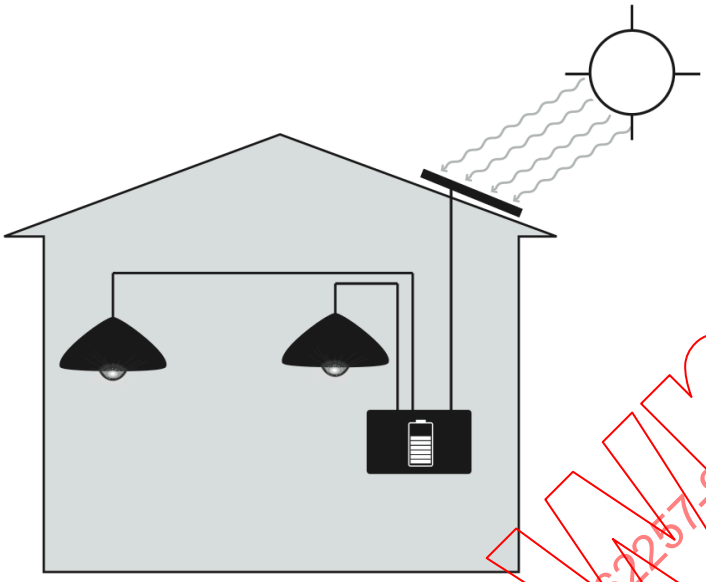

Figure 1 – Fixed indoor components – Example

b) Fixed outdoor components are not inherently portable and are intended to be used outdoors, or are connected to components intended to be used outdoors by a cable of insufficient length to allow the component in question to be placed indoors. Fixed outdoor components may contain integrated PV modules; however, PV modules without additional components form their own category. See Figure 2 for an example.

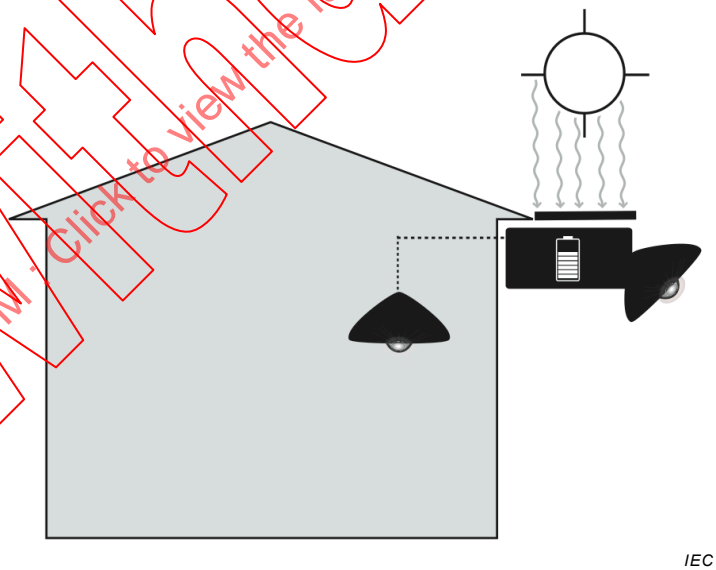

Figure 2 – Fixed outdoor components with an indoor light point – Example

Portable components are further classified by the presence or absence of an integrated solar module:

c) Portable separate components are portable, with a battery and load permanently or temporarily joined. If the component is intended to be connected to a fixed outdoor or portable integrated component or a PV module, the cable connecting the two components shall be sufficiently long to place the outdoor component outdoors in an appropriate location while the indoor component remains indoors; otherwise, the portable integrated category shall apply. See Figure 3 for an example.

IECNORM.COM : Click to view the full PDF of IEC TS 62257-9-5:2016 RLV
Withdrawn

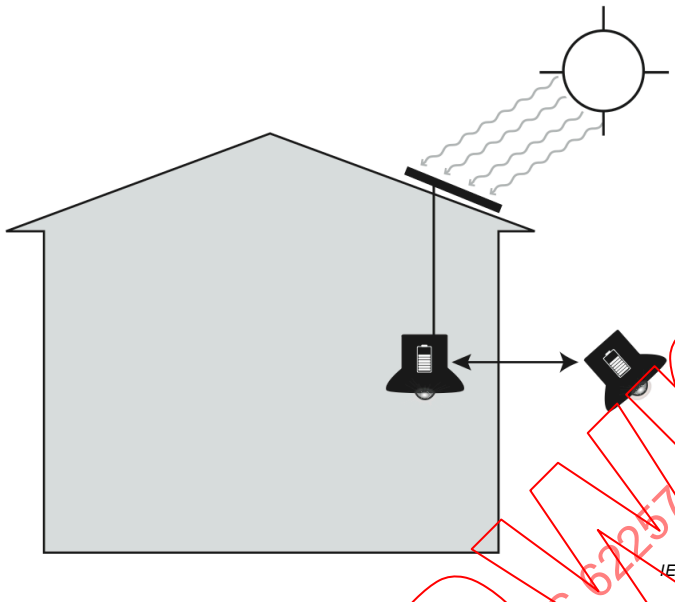

Figure 3 – Portable separate components – Example

d) Portable integrated components are portable and are charged with a solar module that is integrated in the casing or is otherwise designed so that the whole component shall be left outdoors to charge via the solar module. This includes portable components that are intended to be connected to fixed outdoor or portable integrated components, or a PV module, by a cable of insufficient length to allow the component in question to be placed indoors. Portable integrated components may contain PV modules; however, PV modules without additional components form their own category. See Figure 4 for an example.

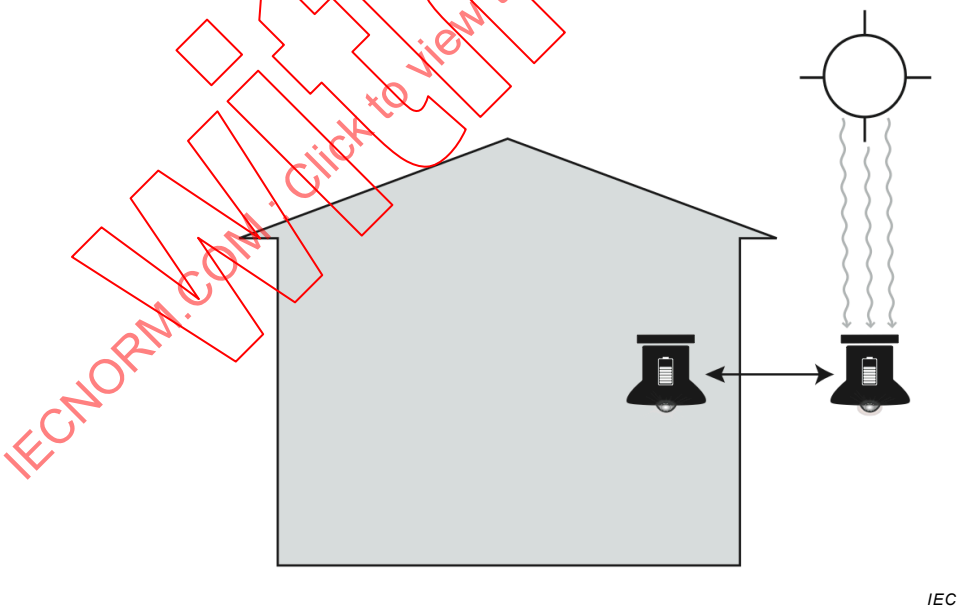

Figure 4 – Portable integrated components – Example

PV modules may be subjected to different standards for durability (including physical and water ingress protection), and are therefore considered a separate category:

e) PV modules include one or more PV cells surrounded by encapsulating or laminating materials with a transparent glass or plastic covering, plus a junction box mounted on the back of the module for electrical connections. A PV module may be surrounded by a frame,

IECNORM.COM : Click to view the full PDF of IEC TS 62257-9-5:2016 RLV
Withdrawn

typically of metal or plastic, and may include mounting brackets or other hardware. This category applies only to PV modules; assemblies containing one or more PV modules plus additional electrical or electronic components, such as circuit boards or batteries, shall be considered fixed outdoor components.

4.1.3 Lighting parts definitions

The portion of the kit which provides lighting can also be divided into several subsystems, as defined below. The subsystems are nested beginning with the smallest subsystem and working down to complete kits.

a) Light source(s): individual LED, CFL, or other light emitting components.

b) Array(s): single or grouped light sources that can be controlled independently from other arrays.

c) Light point(s) or lighting appliance(s): house one or more arrays and can be moved with respect to other light points, if there are more than one.

d) Lighting unit(s): stand-alone parts of the kit, each with an independent battery that powers one or more light points.

NOTE It is appropriate to categorize each light unit (as described in 4.1.2) separately, since the arrangement of battery and light point(s) can be different in different light units.

e) Lighting kit: the overall package of integrated components, including one or several lighting units and potentially other loads or appliances.

Figure 5 below illustrates how a hypothetical lighting kit can be subdivided and categorized. The levels of division are labelled with letters, corresponding to the descriptions above. There are six light sources (A) in this kit divided among four arrays (B). Two of the three light points (C) have one array; the third light point (in the middle – C2) has two arrays. Note that one of the arrays – the one with three light sources – is turned off and the other is on. There are two light units (D). The light unit on the left (D1) can be categorized as portable separate; the other light unit (D2) can be categorized as fixed indoors. Both units are included in a single lighting kit (E). Note that although only lights are illustrated below, other appliances are often included in the kit.

IECNORM.COM : Click to view the full PDF of IEC TS 62257-9-5:2016 RLV
Withdrawn

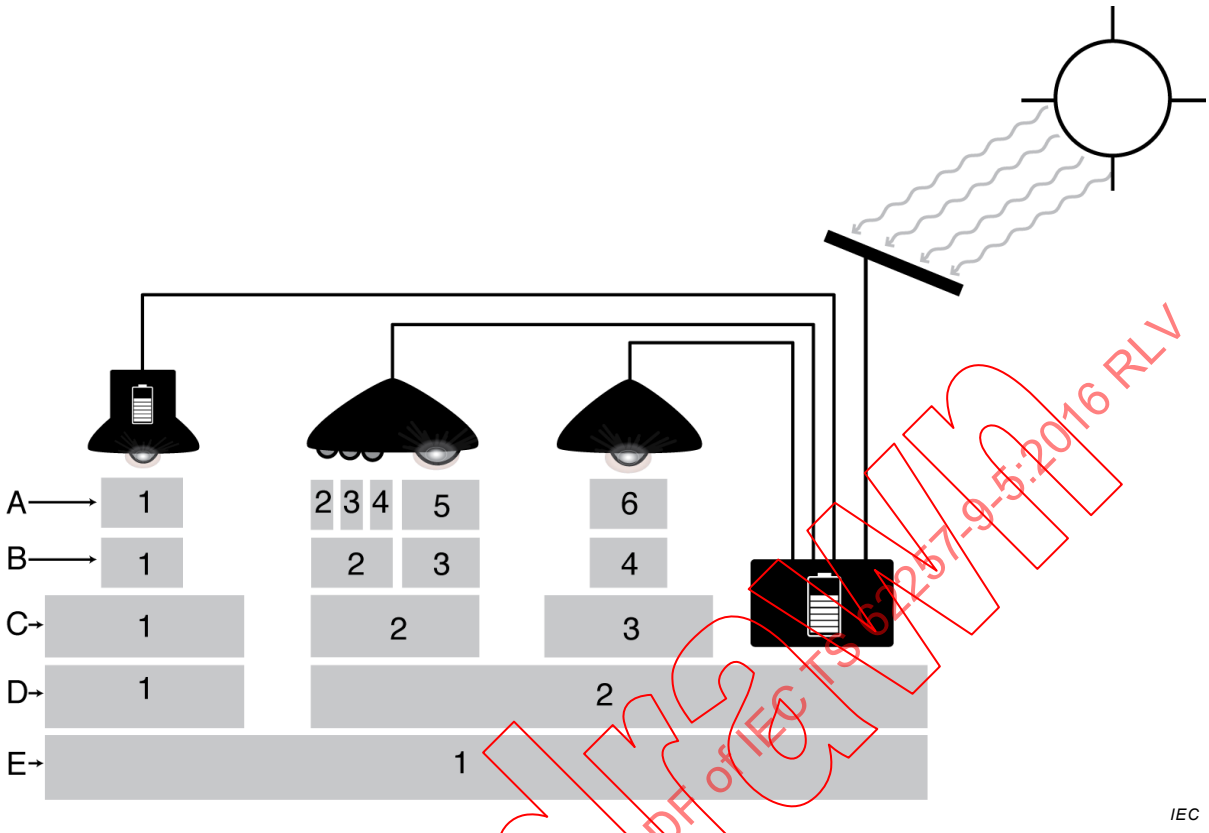

Figure 5 – Division of a lighting kit into subsystems – Illustrative example

4.1.4 Additional system elements

In addition to technical elements, a system can also include:

- packaging with information about the product,
- user's manual(s),
- various advertising for the product across media: print, radio, television, internet, and others, and/or
- warranty support from the manufacturer, and
- hardware for mounting the PV module or outdoor components.

4.2 System measurements and observations

4.2.1 General

Subclause 4.2 describes aspects of an off-grid lighting product that can be measured and/or observed to ascertain its quality and performance. The aspects are grouped into categories, and each aspect begins with a description of its relevance. The aspects can be measured and/or observed using test procedures, which are generally classified as "A" or "B" Class A test procedures will generally result in measurements that are more accurate or less subjective than class B procedures, but class A procedures are also generally more costly to implement. The appropriateness of class A or class B procedures depends on the particular aspect and context of the testing. A class C procedure is specified for selected procedures that may be done with "field modifications" (see Annex AA). The description of each aspect concludes with a description of the result from the test procedure, the units, and an example result. In some cases, multiple pieces of information are grouped in a single aspect for clarity and concision.

IECNORM.COM : Click to view the full PDF of IEC TS 62257-9-5:2016 RLV
Withdrawn

4.2.2 Product design, manufacture, and marketing aspects

4.2.2.1 Arrangement of components

The arrangement of components is a critical aspect to observe because it determines the product category. Different arrangements will offer different utility to the end user.

a) Class A test procedure(s): Annex F: visual screening.

b) Class B test procedure(s): n/a.

c) Result: qualitative description of each separate electronic enclosure and what is housed in or mounted on each.

d) Units: qualitative description.

EXAMPLE Enclosure A contains the battery and has a gooseneck light point protruding from the top. Enclosure B is a remote lighting point with ambient, omnidirectional LEDs mounted on the outside; it is connected to Enclosure A with a 5 m cable. A solar module with a 6 m cable for connection powers Enclosure A.

4.2.2.2 Charging system information

This notes all the available options for charging the device. The key items to note are whether the device can be charged by "central" charging (e.g. via electric grid connection or at a central charging station), "independent" charging (e.g. via an included photovoltaic or electromechanical generator), or both. The available charging options can help determine the utility of the device for users based on the performance aspects (see 4.2.8).

a) Class A test procedure(s): Annex F: visual screening.

b) Class B test procedure(s): Annex D: manufacturer self-reported information.

c) Result (for each charging option):

   1) charger type;

   2) central or independent.

d) Units: qualitative type.

EXAMPLE Two charging options: independent solar charging via the included module, and central grid charging via an auxiliary input designed for use with mobile phone chargers (not included).

4.2.2.3 Lighting system information

This describes the types of light sources used in the product and their arrangement. This is important for understanding the general product design.

a) Class A test procedure(s): Annex F: visual screening.

b) Class B test procedure(s): Annex D: manufacturer self-reported information.

c) Result: qualitative description of the type, number, and arrangement of light sources.

d) Units: qualitative description.

EXAMPLE See 4.1.3.

4.2.2.4 Energy storage system information

This describes the type and number of energy storage systems included in the product.

a) Class A test procedure(s): Annex F: visual screening.

b) Class B test procedure(s): Annex D: manufacturer self-reported information.

c) Result: the type and number of batteries in the system.

d) Units: qualitative description.

EXAMPLE Unit A has a 3,7 V lithium-ion battery with a rating of 2 000 mAh; Unit B has a 3,7 V lithium-ion battery with a rating of 1 000 mAh.

IECNORM.COM : Click to view the full PDF of IEC TS 62257-9-5:2016 RLV
Withdrawn

4.2.2.5 Battery easy replaceability

This is an assessment of whether a low-skill technician can easily replace the battery with only a screwdriver (i.e. no soldering). It is important for considering the relevance of battery replacement information. Some batteries have longer lifetimes than others, so replaceability can be less important.

a) Class A test procedure(s): Annex F: visual screening.

b) Class B test procedure(s): n/a.

c) Result: a yes or no result on whether it is "easy" to replace the battery.

d) Units: yes/no.

EXAMPLE Yes, battery is easily replaceable.

4.2.2.6 Battery general aspects

Those aspects of the battery(-ies) that are important for understanding selection of replacement batteries.

a) Class A test procedure(s): Annex F: visual screening.

b) Class B test procedure(s): Annex D: manufacturer self-reported information or reference component rating.

c) Result (for each battery present):

   1) battery chemistry;

   2) nominal voltage;

   3) package type;

   4) package size;

   5) connection type.

d) Units: qualitative type.

EXAMPLE A sealed lead-acid 4 V prismatic package, 20 mm × 20 mm × 60 mm, wire lead connections.

4.2.2.7 Packaging and user's manual information

Information about the packaging, user's manual, and other consumer-facing information helps establish a baseline for comparing measured values in truth-in-advertising assessments. Certain programmes require particular information to be included in the manual, such as instructions for end-of-life disposal, particularly for batteries and other potentially hazardous components; thorough documentation of the packaging, user's manual, and other consumer-facing information allows compliance with these requirements to be assessed.

a) Class A test procedure(s): Annex F: visual screening.

b) Class B test procedure(s): n/a.

c) Result: there are five types of result:

   1) photographic documentation of the packaging and manual (or digital copies of the original proofs);

   2) notes on the type of manual and which languages are included;

   3) description of the method or pathway for replacing components, including the battery;

   4) specifications of components that could require replacement (fuses, batteries, PV);

   5) instructions for PV and product installation and operation.

d) Units: qualitative type and photographs.

EXAMPLE [Photographs attached to test reports] "The user's manual is a single-sheet included in the package and includes pictograms with explanations in Hindi, English, French, and Swahili.".

Withdrawn
IECNORM.COM : Click to view the full PDF of IEC TS 62257-9-5:2016 RLV

4.2.2.8 Warranty information

The terms and duration of warranty coverage provided to end users are important factors for engendering confidence in stand-alone off-grid lighting and trying to prevent early failure. In practice, servicing warranties is highly variable depending on the structure of supply and service chains.

a) Class A test procedure(s): Annex F: visual screening.

b) Class B test procedure(s): Annex D: manufacturer self-reported information.

c) Result: detailed warranty terms and a "concise" version that highlights the key points of coverage and duration.

d) Units: qualitative type.

EXAMPLE [Detailed warranty terms are documented in scanned attachments to test report] Coverage is against manufacturing defects or under normal use conditions. The product in general is covered for 6 months from the time of purchase; the PV module is warranted for 2 years.

4.2.2.9 Auxiliary outlets, ports and adapters information

This notes all the auxiliary outlets and ports present on the product. The inclusion of USB ports, outlets or mobile phone adapters can be an important purchasing factor for a consumer.

a) Class A test procedure(s): Annex F: visual screening.

b) Class B test procedure(s): Annex D: manufacturer self-reported information.

c) Result: list of included auxiliary outlets, ports and adapters.

d) Units: qualitative type.

EXAMPLE The product has a USB port with mobile phone charging capability and a radio.

4.2.2.10 Appliances information

This notes all the appliances included with the product and all appliances the product is advertised to support. Some products include appliances such as radios. Others include advertising stating that they support certain appliances or making claims as to how long they can power certain appliances.

a) Class A test procedure(s): Annex F: visual screening.

b) Class B test procedure(s): Annex D: manufacturer self-reported information.

c) Result: list of included appliances and list of claims related to supporting appliances.

d) Units: qualitative type.

EXAMPLE The product includes a radio and states that it can "charge a radio that runs for 12 h".

4.2.2.11 Other visual screening results

This incorporates various other important results obtained from visual screening (Annex F), including, but not limited to, component dimensions, component masses, the number of light output settings, and provided specifications.

a) Class A test procedure(s): Annex F: visual screening.

b) Class B test procedure(s): Annex D: manufacturer self-reported information.

c) Result: various results including qualitative descriptions and quantitative measurements.

d) Units: qualitative descriptions and quantitative measurements.

EXAMPLE (for one result) The product's lamp unit and control/battery enclosure have masses of 0,3 kg and 1,5 kg, respectively.

IECNORM.COM : Click to view the full PDF of IEC TS 62257-9-5:2016 RLV
Withdrawn

4.2.3 Product durability and workmanship aspects

4.2.3.1 Water protection – enclosure

This provides a description of the product enclosure's ability to keep out water in terms of IP class. For components intended to be used and/or charged outside, water protection is important for product function as well as user safety.

a) Class A test procedure(s): Annex U: Physical and water ingress protection test according to IEC 60529 or using the alternative methods if the alternative method results are unequivocal.

b) Class B test procedure(s): Annex U: Physical and water ingress protection test.

c) Result: pass or fail for IP class (second digit) and a description of degree of water protection provided by enclosure.

d) Units: pass or fail and qualitative description.

EXAMPLE The product passes IPx3. The product's enclosure contains tight fitting components, all of which have gaskets to prevent water intrusion.

4.2.3.2 Water protection – circuit protection and drainage

This provides a description of any drainage means incorporated into a product and/or circuit board protection methods used in the product. The incorporation of drainage or circuit board protection is crucial for products intended to be portable or used outdoors that have enclosures providing little to no water intrusion protection.

a) Class A test procedure(s): Annex F: visual screening combined with Annex D: manufacturer self-reported information.

b) Class B test procedure(s): Annex D: manufacturer self-reported information.

c) Result: qualitative description of drainage or circuit protection methods used.

d) Units: qualitative description.

EXAMPLE The product has a conformal coating on its circuit board as well as drainage holes in the base of the enclosure to allow drainage of collected water.

4.2.3.3 Water protection – overall

This combines the protection afforded by the enclosure, circuit protection, and consumer labelling to assess the overall protection from water exposure.

a) Class A test procedure(s): Annex V: level of water protection.

b) Class B test procedure(s): n/a.

c) Result: descriptive assessment of exposure protection by enclosure only, technical means, and overall system. The assessment categories are "no protection," "occasional rain," "frequent rain, "permanent rooftop installation for PV modules," and "permanent outdoor exposure."

d) Units: qualitative type.

EXAMPLE Enclosure only: no protection. Technical means: occasional rain. Overall: occasional rain.

4.2.3.4 Water protection – solar module

This provides a description of an external solar module's ability to keep out water in terms of IP class (if the solar module is integrated into the product enclosure, then 4.2.3.1 already covers the solar module). Solar modules need to be left outside to collect solar energy; therefore, water protection is important for solar module function as well as user safety.

a) Class A test procedure(s): Annex U: Physical and water ingress protection test according to IEC 60529 or using the alternative methods (U.4.4) if the alternative method results are unequivocal.

IECNORM.COM : Click to view the full PDF of IEC TS 62257-9-5:2016 RLV
Withdrawn

b) Class B test procedure(s): Annex U: Physical and water ingress protection test.

c) Result: pass or fail for IP class (second digit) and a description of degree of water protection.

d) Units: pass or fail and qualitative description.

EXAMPLE The product's solar module passes IPx4; the solar module is well-sealed, providing an adequate level of protection against water ingress.

4.2.3.5 Physical ingress protection

This provides a description of the degree of protection from the intrusion of foreign objects a component's enclosure provides in terms of IP class. Physical ingress protection is important for user safety as well as product functionality.

a) Class A test procedure(s): Annex U: Physical and water ingress protection test according to IEC 60529 or using the alternative methods (U.4.3) if the alternative method results are unequivocal.

b) Class B test procedure(s): Annex U: Physical and water ingress protection test.

c) Result: pass or fail for IP class (first digit) and description of degree of physical ingress protection.

d) Units: pass or fail and qualitative description.

EXAMPLE The product components pass IP 2x; the product enclosure's components fit together well, with vents smaller than 12,5 mm.

4.2.3.6 Physical ingress protection – solar module

This provides a description of an external solar module's ability to prevent the intrusion of foreign objects in terms of IP class (if the solar module is integrated into the product enclosure, then 4.2.3.5 already covers the solar module). Solar modules need to be left outside to collect solar energy; therefore, physical ingress protection is important for solar module function as well as user safety.

a) Class A test procedure(s): Annex U: Physical and water ingress protection test according to IEC 60529 or using the alternative methods (U.4.4) if the alternative method results are unequivocal.

b) Class B test procedure(s): Annex U: Physical and water ingress protection test.

c) Result: pass or fail for IP class (first digit) and description of degree of physical ingress protection.

d) Units: pass or fail and qualitative description.

EXAMPLE The product's solar module is estimated to pass IP 3x; the solar module is well-sealed so that only small particles could intrude.

4.2.3.7 Drop resistance

This provides an evaluation of a product's robustness and ability to withstand being dropped. Drop resistance is important for product functionality and user safety and satisfaction in portable components.

a) Class A test procedure(s): Annex W: mechanical durability test.

b) Class B test procedure(s): n/a.

c) Result: pass or fail for functionality, damage, and the presence of user safety hazards.

d) Units: a pass or fail result on whether the DUT functions, incurred damage, and presented a safety hazard to the user.

EXAMPLE When dropped, the product stopped working and its glass LED cover shattered, presenting a safety hazard to the user. Functional: fail. Damage: fail. Safety hazard: fail.

IECNORM.COM : Click to view the full PDF of IEC TS 62257-9-5:2016 RLV
Withdrawn

4.2.3.8 Gooseneck and moving part durability

This provides an evaluation of a product's gooseneck or other moving part's robustness and ability to withstand being torqued through its expected range of motion. Gooseneck and moving part durability is important for product functionality and user safety and satisfaction.

a) Class A test procedure(s): Annex W: mechanical durability test.

b) Class B test procedure(s): n/a.

c) Result: a pass or fail for functionality, damage, and the presence of user safety hazards.

d) Units: a pass or fail result on whether the DUT functions, incurred damage, and presented a safety hazard to the user.

EXAMPLE After the gooseneck/moving part test, the LEDs worked properly but there was visible damage (a cracked housing) that did not pose a hazard. Functional: pass. Damage: fail. Safety: pass.

4.2.3.9 Connector durability

This provides an evaluation of a product's connectors' robustness and ability to withstand plug cycling. Connector durability is important for product functionality and user safety and satisfaction.

a) Class A test procedure(s): Annex W: mechanical durability test.

b) Class B test procedure(s): n/a.

c) Result: a pass or fail for functionality, damage, and the presence of user safety hazards.

d) Units: a pass or fail result on whether the DUT functions, incurred damage, and presented a safety hazard to the user.

EXAMPLE After 400 cycles in the connector test, the PV module's barrel plug socket detached from the DUT enclosure, rendering the PV module connector unusable. Functional: fail. Damage: fail. Safety: pass.

4.2.3.10 Switch durability

This provides an evaluation of a product's switches' robustness and ability to withstand switch cycling. Switch durability is important for product functionality and user safety and satisfaction.

a) Class A test procedure(s): Annex W: mechanical durability test.

b) Class B test procedure(s): n/a.

c) Result: a pass or fail for functionality, damage, and the presence of user safety hazards.

d) Units: a pass or fail result on whether the DUT functions, incurred damage, and presented a safety hazard to the user.

EXAMPLE After 600 cycles in the switch test, the DUT's light switch stopped turning on the DUT. Functional: fail. Damage: fail. Safety: pass.

4.2.3.11 Strain relief durability

This provides an evaluation of a product's strain reliefs' robustness and ability to withstand being pulled. Strain relief durability is important for product functionality and user safety and satisfaction.

a) Class A test procedure(s): Annex W: mechanical durability test.

b) Class B test procedure(s): n/a.

c) Result: a pass or fail for functionality, damage, and the presence of user safety hazards.

d) Units: a pass or fail result on whether the DUT functions, incurred damage, and presented a safety hazard to the user.

EXAMPLE The DUT's strain reliefs all withstood the strain relief test without incurring any damage. Functional: pass. Damage: pass. Safety: pass.

IECNORM.COM : Click to view the full PDF of IEC TS 62257-9-5:2016 RLV
Withdrawn

4.2.3.12 Wiring quality

This provides a qualitative evaluation of a product's wiring quality, including (but not limited to) neatness and connection quality.

a) Class A test procedure(s): Annex F: visual screening.

b) Class B test procedure(s): n/a.

c) Result: a qualitative description of wiring quality.

d) Units: qualitative description and number of failures with respect to key indicators.

EXAMPLE The DUT's wires are neatly arranged (i.e. not tangled or wrapped around one another) and the solder joints are of good quality. No bad joints, pinched wires, or other poor wiring indicators.

4.2.3.13 Battery protection strategy

This provides a quantitative evaluation of a product's battery discharge-recharge protection strategy / algorithm, which is important for battery longevity as well as user safety.

a) Class A test procedure(s): Annex S: charge controller behaviour test.

b) Class B test procedure(s): Annex D: manufacturer self-reported information.

c) Result: deep discharge and overvoltage protection voltages.

d) Units: quantitative description

EXAMPLE The DUT has a deep discharge protection voltage of 1,92 V/cell and an overvoltage protection voltage of 2,4 V/cell.

4.2.4 Lighting durability aspects

4.2.4.1 500 h lumen maintenance

This is a measure of the amount of light degradation after 500 h of operation at a constant voltage, which can provide valuable insight into the quality of the LEDs and/or the DUT's circuitry.

a) Class A test procedure(s): Annex J: lumen maintenance test.

b) Class B test procedure(s): n/a.

c) Result: percentage of lumen output maintained after 500 h of constant operation.

d) Units: percentage (%).

EXAMPLE The DUT maintained 96 % of its original lumen output after 500 h of operation.

4.2.4.2 2 000 h lumen maintenance

This is a measure of the amount of light degradation after 1 000 h and 2 000 h of operation at a constant voltage, which can provide valuable insight into the quality of the LEDs and/or the DUT's circuitry.

a) Class A test procedure(s): Annex J: lumen maintenance test.

b) Class B test procedure(s): n/a.

c) Result: percentage of lumen output maintained after 1 000 h and 2 000 h of constant operation.

d) Units: percentage (%).

EXAMPLE The DUT maintained 96 % and 93 % of its original lumen output after 1 000 h and 2 000 h of operation, respectively.

4.2.4.3 Fluorescent light durability

These are additional checks of durability for fluorescent lights that account for their unique characteristics.

IECNORM.COM : Click to view the full PDF of IEC TS 62257-9-5:2016 RLV
Withdrawn

a) Class A test procedure(s): Cycling test of IEC 62257-12-1.

b) Class B test procedure(s): n/a.

c) Result: a pass or fail for cycling tests of IEC 62257-12-1.

d) Units: pass or fail.

EXAMPLE The DUT passed the cycling tests of IEC 62257-12-1.

4.2.5 Battery performance aspects

4.2.5.1 Battery capacity

This is a measure of the quantity of electricity (electric charge), usually expressed in ampere-hours (Ah), which a fully charged battery can deliver under specified conditions, which affects the run time of products.

a) Class A test procedure(s): Annex K: battery test (all chemistries); IEC 61951-1:2013, 7.3.2, for nickel-cadmium batteries; IEC 61951-2:2011, 7.3, for nickel-metal hydride batteries; or IEC 61960:2011, 7.3.1, for lithium-based batteries.

b) Class B test procedure(s): Annex D: manufacturer self-reported information or reference component rating.

c) Result: capacity of the battery at a particular discharge rate.

d) Units: milliampere-hours (mAh) at a discharge rate expressed as the fraction of the battery capacity that is used each hour (I_t A).

EXAMPLE 3 500 mAh at 0,2 I_t A.

4.2.5.2 Battery round-trip energy efficiency

This is a measure of how efficient the DUT's battery is at storing energy to deliver for later use.

a) Class A test procedure(s): Annex K: battery test.

b) Class B test procedure(s): n/a.

c) Result: storage efficiency of the battery pack.

d) Units: percentage (%).

EXAMPLE 95 %.

4.2.5.3 Battery storage durability

This is a measure of battery capacity degradation from storage, which can indicate batteries that could degrade prematurely under typical use.

a) Class A test procedure(s): Annex BB: battery durability test.

b) Class B test procedure(s): n/a.

c) Result: percent capacity loss from storage.

d) Units: percentage (%).

EXAMPLE The battery's capacity loss from storage is 90 %.

4.2.5.4 Battery nominal voltage

This is important for matching to the other components and determines, along with the battery ampere-hour capacity, the energy capacity of the battery. It depends on the battery chemistry (what materials are used to store energy) and the number of electrochemical cells that are in series.

a) Class A test procedure(s): Annex F: visual screening.

IECNORM.COM : Click to view the full PDF of IEC TS 62257-9-5:2016 RLV
Withdrawn

b) Class B test procedure(s): Annex D: manufacturer self-reported information or reference component rating.

c) Result: nominal voltage of the battery pack.

d) Units: voltage (V).

EXAMPLE 3,6 V.

4.2.6 Solar module aspects

4.2.6.1 Solar I-V curve parameters

These are the key parameters describing solar module performance at standard test conditions (STC: AM 1,5, 25 °C cell temperature, 1 000 W/m^2 irradiance) and typical module operating temperature (TMOT: AM 1,5, 50 °C cell temperature, 1 000 W/m^2 irradiance).

a) Class A test procedure(s): IEC 60904-1.

b) Class B test procedure(s): Annex Q: outdoor photovoltaic module I-V characteristics test.

c) Result (for both STC and TMOT):

1) Open circuit voltage (V_{oc}).
2) Short circuit current (I_{sc}).
3) Maximum power voltage (V_{mpp}).
4) Maximum power current (I_{mpp}).
5) Peak power (P_{mpp}).
6) Voltage temperature coefficient (not dependent on STC nor TMOT).

d) Units: volts (V), amperes (A), watts (W), per degree Celsius (1/°C).

EXAMPLE STC values: V_{oc} = 7,5 V, I_{sc} = 0,55 A, V_{mpp} = 5,8 V, I_{mpp} = 0,50 A, and P_{mpp} = 2,9 W. The module's voltage temperature coefficient is -0,004 2/°C.

4.2.6.2 Cable length

The length of solar module cables connected to fixed outdoor components are important because it is one aspect that determines the product category; a minimum length is typically specified for products to "qualify" as having separate PV modules to ensure that a user can place the solar module, or other component, outdoors while the other components remain indoors. This has implications for the degree of water protection in quality standards.

a) Class A test procedure(s): Annex F: visual screening.

b) Class B test procedure(s): n/a.

c) Result: There are two main outputs:

1) the length of a solar module cable that is useful for separating the solar module from the enclosure that contains the battery being charged; and
2) the length of the cable between any fixed outdoor component and any other component.

d) Units: metres (m).

EXAMPLE 3,5 m.

4.2.7 Electrical characteristics

4.2.7.1 Appliance voltage compatibility

This provides an assessment of whether an included appliance can safely and properly operate over the entire set of operating conditions of the DUT, including discharging with a deeply discharged battery and charging with a nearly full battery.

a) Class A test procedure(s): Annex EE: assessment of DC ports.

IECNORM.COM : Click to view the full PDF of IEC TS 62257-9-5:2016 RLV
Withdrawn

b) Class B test procedure(s): n/a.

c) Result: pass or fail for functionality, damage, and safety.

d) Units: pass/fail; qualitative description.

EXAMPLE The DUT remained functional after the test and no damage or safety hazard was present.

4.2.7.2 Power consumption

The power consumed by an appliance or lighting appliance is an important metric for use in off-grid applications in which the supply of energy is limited. The power consumption is measured in order to calculate the run time for systems with included appliances.

a) Class A test procedure(s): Annex FF: appliance tests.

b) Class B test procedure(s): n/a.

c) Result: DC power.

d) Units: watts (W).

EXAMPLE 1,50 W.

4.2.7.3 Circuit and overload protection

This provides an assessment of the system's PV overvoltage protection, output overload protection, and safeguards against miswiring in systems that include ports or outlets.

a) Class A test procedure(s): Annex DD: protection tests.

b) Class B test procedure(s): Annex D: manufacturer self-reported information.

c) Result: a pass or fail result on whether the unit had adequate protection, functioned, or showed damage, fault indications or safety hazards after tests. Tables with quantitative and qualitative results of the voltage range and miswiring protection tests.

d) Units: volts (V), pass or fail results on whether the unit had adequate protection, functioned, or showed damage, fault indications or safety hazards after test.

EXAMPLE The DUT uses appropriately sized fuses to provide adequate circuit protection. Spare fuses are included and the fuse size is noted on the product casing.

4.2.7.4 DC ports

This provides an assessment of the system's DC ports.

a) Class A test procedure(s): Annex EE: assessment of DC ports.

b) Class B test procedure(s): n/a.

c) Result: minimum, typical, and maximum port voltages, tables and plots of voltage, current, power and efficiency of each port.

d) Units: volts (V), amperes (A), watts (W), percentage (%).

4.2.8 Performance aspects

4.2.8.1 General

Energy availability, component run times and light output are key elements of performance for stand-alone lighting kits. Some of the aspects listed below will be different for different light settings and appliance combinations.

4.2.8.2 Daily energy service

The daily energy service is the duration of service provided to end users after one day of solar charging and depends on the system-level performance for a particular setting. The standard solar charging day is defined as an incident solar resource of 5 kWh/m^2. This is an important metric because it is an estimate of the day-to-day services users can expect in ideal

IECNORM.COM : Click to view the full PDF of IEC TS 62257-9-5:2016 RLV
WITHDRAWN

charging conditions. The daily energy service depends on the system-level performance for a particular light setting and combination of appliances.

a) Class A test procedure(s): Annex M: full-battery run time test, Annex R: solar charge test, Annex GG: energy service calculations.

b) Class B test Standards(s): n/a.

c) Result: watt·hours per day of energy available after a battery is charged from empty for one standard solar day.

d) Units: watt·hours (Wh).

EXAMPLE 60 Wh/day.

4.2.8.3 Solar-day lighting run time

The solar-day run time is the duration of service provided to end users from one day of solar charging and depends on the system-level performance for a particular setting. The standard solar charging day is defined as an incident solar resource of 5 kWh/m^2. This is an important metric because it is an estimate of the day-to-day services users can expect in ideal charging conditions. It is important to note that variations in available solar energy (due to climate, weather, or user behaviour) will result in commensurate differences in actual run time from solar charging.

a) Class A test procedure(s): Annex R: solar charge test; or Annex M: full-battery run time test, Annex R: solar charge test, and Annex GG: energy service calculations.

b) Class B test procedure(s): n/a.

c) Class C test procedure: Annex AA: field testing methods.

d) Result: hours of operation to 70 % of the initial brightness after the battery is charged from empty for one standard solar day.

e) Units: hours (h).

EXAMPLE 4,5 h.

4.2.8.4 Solar-day appliance run time

The solar-day run time is the duration of service provided to end users from one day of solar charging and depends on the system-level performance for a particular setting. The standard solar charging day is defined as an incident solar resource of 5 kWh/m^2. This is an important metric because it is an estimate of the day-to-day services users can expect in ideal charging conditions. It is important to note that variations in available solar energy (due to climate, weather, or user behaviour) will result in commensurate differences in actual run time from solar charging.

a) Class A test procedure(s): Annex R: solar charge test; or Annex M: full-battery run time test, Annex R: solar charge test, and Annex GG: energy service calculations.

b) Class B test procedure(s): n/a.

c) Result: hours of operation after the battery is charged from empty for one standard solar day.

d) Units: hours (h).

EXAMPLE 4,5 h.

4.2.8.5 Lighting full-battery run time

The full-battery run time is the duration of service provided to end users from a fully charged battery and depends on the system-level performance for a particular setting. Regardless of the charging method, the full-battery run time is a relevant metric. For products that recharge centrally, it represents their hours of autonomy until the product shall be returned to a charging station (and potentially a fee shall be paid). For solar-charged products, it

IECNORM.COM : Click to view the full PDF of IEC TS 62257-9-5:2016 RLV
Withdrawn

represents the ability to store excess energy for a rainy day. For electromechanically-charged products, it represents the maximum period the product can be operated in between charges.

a) Class A test procedure(s): Annex M: full-battery run time test, alone or in conjunction with Annex GG: energy service calculations.

b) Class B test Standards(s): n/a.

c) Class C test procedure: Annex AA: field testing methods.

d) Result: hours of operation to 70 % of the initial brightness when beginning with a fully charged battery; sometimes also known as "autonomous run time."

e) Units: hours (h).

EXAMPLE 9,3 h.

4.2.8.6 Grid-charge run time

The grid-charge run time is the run time for DUTs that are centrally charged (i.e. with a central charging station or the grid). This is an important metric because it provides the expected run time after a full day of grid charging.

a) Class A test procedure(s): Annex O: grid charge test.

b) Class B test procedure(s): n/a.

c) Result: hours of operation to 70 % of the initial brightness after the battery is grid charged from empty.

d) Units: hours (h).

EXAMPLE 6,3 h.

4.2.8.7 Electromechanical charge ratio

The electromechanical charge ratio is the response factor for electromechanical (i.e. dynamo) charging – a ratio of run time to charging time (i.e. with an electromechanical charger that is included with the device and not at a central electromechanical charging station). The electromechanical charging is done at a controlled rate. This is an important metric because it allows one to estimate the duration of user effort required each day for a given level of service.

a) Class A test procedure(s): Annex P: electromechanical charge test.

b) Class B test procedure(s): n/a.

c) Result: ratio of time of operation to charging time.

d) Units: unitless.

EXAMPLE 12 min run time per 1 min of charging time.

4.2.9 Light output aspects

4.2.9.1 Average luminous flux output

Average luminous flux output is the light output of a DUT when it is operated at the standard operating voltage or when an individual lighting appliance is measured at the typical port voltage. This is a key metric that compares the overall light output of DUTs.

a) Class A test procedure(s): CIE 084, CIE 127, IESNA LM-78-07, or IESNA LM-79-08.

b) Class B test procedure(s): Annex I: light output test.

c) Class C test procedure(s): Annex AA: field testing methods.

d) Result: average luminous flux.

e) Units: lumens (lm).

EXAMPLE 95,6 lm.

IECNORM.COM : Click to view the full PDF of IEC TS 62257-9-5:2016 RLV
Withdrawn

4.2.9.2 Full width half maximum (FWHM) angles

The full width half maximum angle is a metric used to understand the light distribution of a DUT and is the total included angle for which the illumination is greater than or equal to half the illumination at the brightest point in the plane.

a) Class A test procedure(s): CIE 084, CIE 127, IESNA LM-79-08.

b) Class B test procedure(s): Annex T: light distribution test.

c) Result: vertical and horizontal FWHM angles.

d) Units: degrees (°).

EXAMPLE The DUT's horizontal and vertical FWHM angles are both 65°.

4.2.9.3 Average light distribution characteristics

A light distribution is the illuminance "map" of a DUT. This metric is useful for determining the utility with respect to task lighting. The test is done with the DUT operating at the average operating point from the full-battery run time test.

a) Class A test procedure(s): CIE 084, CIE 127, IESNA LM-79-08.

b) Class B test procedure(s): Annex T: light distribution test.

c) Class C test procedure(s): Annex AA: field testing methods.

d) Result: constant-voltage usable area at a specified distance.

e) Units: square metres (m^2) and lux (lx).

EXAMPLE The DUT's usable area at a distance of 0,75 m is 0,76 m^2 and the DUT's work surface illuminance is 40 lux.

4.2.9.4 Colour characteristics

The colour characteristics of light include the colour rendering index (CRI) and the correlated colour temperature (CCT).

a) Class A test procedure(s): Annex I: light output test.

b) Class B test procedure(s): n/a.

c) Result: CRI value and colour temperature.

d) Units: CRI is unitless and the colour temperature is in kelvin (K).

EXAMPLE The CRI is 80 and the colour temperature is 7 000 K.

4.2.10 Battery-charging circuit efficiency

The battery-charging circuit efficiency, or generator-to-battery charging efficiency, is a measure of how efficient the DUT electronics are at feeding generated energy into the battery.

a) Class A test procedure(s): IEC 62509.

b) Class B test procedure(s): Annex R: solar charge test.

c) Result: battery-charging circuit efficiency.

d) Units: percentage (%).

EXAMPLE 90 %.

4.2.11 Self-certification aspects

4.2.11.1 Product and manufacturer information

Manufacturer-reported product and manufacturer information is important for tracking purposes as well as for ensuring the test lab has up-to-date product information.

IECNORM.COM : Click to view the full PDF of IEC TS 62257-9-5:2016 RLV
Withdrawn

a) Class A test procedure(s): Annex D: manufacturer self-reported information.

b) Class B test procedure(s): n/a.

c) Result: various qualitative and quantitative information.

d) Units: qualitative and quantitative.

EXAMPLE The product's free-on-board price is USD 30, it is sold in Kenya and India, etc.

4.2.11.2 Warranty coverage

Warranty coverage goes beyond the terms of a warranty and provides detail on coverage in a particular location. It is typically only provided in cases where it is necessary to verify coverage in a particular town or region.

a) Class A test procedure(s): Annex D: manufacturer self-reported information.

b) Class B test procedure(s): n/a.

c) Result: qualitative description.

d) Units: qualitative description.

EXAMPLE The support in [region name] is provided by a small network of technicians who have been trained to repair products by [manufacturer or distributor name]. For repairs that are beyond the scope of their capabilities, replacement products are provided. The consumers in [region name] can access warranty service by dialling a phone number that is on a sticker placed on the original packaging.

4.2.11.3 Third-party marks and certifications

Third-party marks and certifications (e.g., UL) can be an important aspect in the eyes of consumers and investors, alike.

a) Class A test procedure(s): Annex D: manufacturer self-reported information.

b) Class B test procedure(s): n/a.

c) Result: qualitative marks and certifications.

d) Units: qualitative type.

EXAMPLE ISO 9001 certified.

5 Product specification

5.1 General

Quality standards and warranty requirements (Figure 6) are used to interpret the measurements and observations made about a product. Together they form a product specification.

Figure 6 – The two components of a product specification

- Quality standards set a minimum level of durability and protect buyers and users from false advertising claims.
- Warranty requirements set a minimum level of user protection from early failure.

Each criterion in a specification refers to a particular aspect of the product, as listed in 4.2, and requires a minimum level of quality, service, or performance.

IECNORM.COM : Click to view the full PDF of IEC TS 62257-9-5:2016 RLV
Withdrawn

The standards and requirements should be appropriate for the goals of the organization or individual who is using them as a framework for quality assurance and should consider the following factors:

- availability of products on the market with the necessary quality and performance;
- ability of buyers to pay for the products;
- diversity of end user needs;
- tolerance for manufacturing variation.

Clause 5 describes the framework for standards and requirements in general and offers insights on the best practices for creating a product specification. It includes a template product specification followed by guidance on completing each section. Annex A presents an example specification for off-grid lighting market support programme qualification.

5.2 Applications

Product specifications that include some combination of quality standards and warranty requirements can support a broad range of quality assurance needs. Table 1 lists examples of how they are applied depending on the type of quality assurance framework.

Table 1 – Applications of product specifications

Type of QA framework	Example(s) of applying Clause 5
General market support	Use quality standards and general warranty requirements to qualify for institutional market support. Use quality standards to qualify for "verified product" programs. Use quality standards and other requirements to qualify for investment or financing.
Manufacturing/ distribution	For manufacturers: incorporate quality standards from market support programmes or distributors in the design and production QC processes. For distributors: set minimum quality standards and warranty requirements for products to identify suppliers.
Bulk procurement	Set minimum quality standards and warranty requirements for products to qualify in a request for offers. If the project is in a specific location, the warranty requirements may also include specific levels of service in that particular area.
Trade regulation	Set minimum quality standards for tax exemption or customs.

5.3 Quality assurance principles

The framework for considering quality standards and warranty requirements presented in this part of IEC 62257 is designed to support broad types of programmes and institutions in the off-grid lighting market. The following key principles guide the framework.

- Balance quality and affordability for price-sensitive buyers – it does not matter how well products perform if the target users cannot afford them.
- Encourage innovation and technological diversity. Wherever possible, be open-ended in the technical approaches that are allowed.
- Empower buyers to choose the right product for their needs and budget by focusing product specifications and communication on outcomes for end users.
- Use low-cost, rigorous, targeted tests to match the general affordability requirements for the market and accommodate both incremental and innovative changes to product design. The tests should be feasible for use by a broad set of potential users.
- Focus quality standards on elements of a product that are difficult for typical buyers to assess themselves, like truth-in-advertising and durability.
- Focus warranty requirements on providing a baseline of support.

IECNORM.COM : Click to view the full PDF of IEC TS 62257-9-5:2016 RLV
Withdrawn

5.4 Product specification framework description

5.4.1 General

Subclause 5.4 describes a framework for creating product specification documents for off-grid lighting. First, a blank specification (5.4.2) is provided that lists all the pieces that may be specified. Next, 5.4.3 describes guidelines for setting tolerances in a product specification. Finally, the main sections in a specification are described in more detail with notes and guidance (5.4.4, 5.4.5).

An example product specification for general market support programmes is in Annex A.

A product specification has five parts:

a) Scope: defines the applicability and use of the quality standards.

b) Test requirements: defines requirements for test result validity.

c) Product category requirements: unambiguously defines the categories that may be referenced later.

d) Quality standards: lists quality-related aspects and minimum or required results for each aspect with a tolerance; may be subdivided by product category.

e) Warranty requirements: lists requirements for minimum levels of warranty support.

5.4.2 Product specification template

5.4.2.1 General

Subclause 5.4.2 is a blank, rough template for setting quality standards and warranty requirements to support the goals of a programme or institution. Note that in many applications certain criteria or entire categories of criteria do not apply and should be removed. Text in *italics* is intended for replacement and describes what should go in each space.

5.4.2.2 Scope

Describe the intended use of the product specification, the contents in general, and provide guidance on how to use the document.

5.4.2.3 Test requirements

Specify the level of testing that is required. Typically this is quality test method (QTM) testing (see Clause 6).

Describe any product sampling requirements for qualification testing.

Specify the number of light output settings required to be measured for products with multiple settings. Typically, at least one set of test results should fully characterize the performance on the highest light output setting.

5.4.2.4 Product category requirements

Describe which product categories (see 4.1.2) are covered/allowed.

Describe any other requirements or eligibility criteria for products that are categorical (e.g. shall be solar charged, shall be plug-and-play, shall be low-voltage, batteries shall be replaceable).

Qualification as a "separate" PV module requires meeting the criteria listed in Table 2:

IECNORM.COM : Click to view the full PDF of IEC TS 62257-9-5:2016 RLV
Withdrawn

Table 2 – Qualification as separate PV module

Criterion	Aspect(s)	Required value
PV module cable length	4.2.6.2 Cable length	*Define the length in metres that is required for qualification as a separate PV module.*

5.4.2.5 Quality standards

The product shall meet each of the criteria listed in the truth-in-advertising (Table 3), safety and durability (Table 4), and end user support (Table 5) tables.

Table 3 – Truth-in-advertising tolerance

Truth-in-advertising criterion	Aspect(s) considered in assessment	Requirement
System performance tolerance – numeric ratings	4.2.8 Performance aspects 4.2.9 Light output aspects Others, if applicable	*Define the tolerance for deviation from ratings.*
System components tolerance – numeric ratings	4.2.5 Battery performance aspects 4.2.6 Solar module aspects 4.2.7.1 Appliance voltage compatibility 4.2.7.2 Power consumption 4.2.7.4 DC ports Others, if applicable	*Define the tolerance for deviation from ratings.*
Other numeric ratings tolerance	Multiple	*Define the tolerance for deviation from ratings.*
Overall truth–in-advertising statement	Multiple	*Include an overall description of the requirements for truth-in-advertising that are not covered by the requirements above.*

IECNORM.COM : Click to view the full PDF of IEC TS 62257-9-5:2016 RLV
Withdrawn

Table 4 – Safety and durability standards *(1 of 2)*

Safety or durability criterion	Aspect(s) considered in assessment	Product category (form factor and/or technology)	Requirement
Level of water exposure protection (*overall, technical, or enclosure-only*)	4.2.3.1 Water protection – enclosure 4.2.3.2 Water protection – circuit protection and drainage 4.2.3.3 Water protection – overall 4.2.3.4 Water protection – solar module 4.2.11.1 Product and manufacturer information 4.2.2.7 Packaging and user's manual information	Category 1	*Define level of protection in terms of water protection integrated assessment:* *No protection, occasional rain, frequent rain, or permanent outdoor exposure.*
		Category 2	*Define level of protection in terms of water protection integrated assessment.*
Physical ingress protection	4.2.3.5 Physical ingress protection 4.2.3.6 Physical ingress protection – solar module	Category 1	*Define level of protection in terms of IP class.*
		Category 2	*Define level of protection in terms of IP class.*
Mechanical durability – drop test	4.2.3.7 Drop resistance	Category 1	*Define maximum number of failures out of the number that are tested for damage, functionality, and safety.*
		Category 2	*Define maximum number of failures out of the number that are tested for damage, functionality, and safety.*
Mechanical durability – goosenecks and moving parts	4.2.3.8 Gooseneck and moving part durability	Products with goosenecks/moving parts	*Define maximum number of failures out of the number that are tested for damage, functionality, and safety.*
Mechanical durability – connectors	4.2.3.9 Connector durability	Products with connectors	*Define maximum number of failures out of the number that are tested for damage, functionality, and safety.*
Mechanical durability – switches	4.2.3.10 Switch durability	All products	*Define maximum number of failures out of the number that are tested for damage, functionality, and safety.*
Mechanical durability – strain relief	4.2.3.11 Strain relief durability	Products with connectors	*Define maximum number of failures out of the number that are tested for damage, functionality, and safety.*
Workmanship	4.2.3.12 Wiring quality	All products	*Define maximum number of samples with bad solder joints, poor wiring, etc. out of the number that are tested.*
Battery durability	4.2.3.13 Battery protection strategy 4.2.5.3 Battery storage durability 4.2.11.1 Product and manufacturer information 4.2.11.3 Third-party marks and certifications	All products	*Define a minimum level of battery protection that will protect the product's battery and the user. Define maximum capacity loss following battery durability test.*

IECNORM.COM : Click to view the full PDF of IEC TS 62257-9-5:2016 RLV
Withdrawn

Table 4 *(2 of 2)*

Safety or durability criterion	Aspect(s) considered in assessment	Product category (form factor and/or technology)	Requirement
Lumen maintenance	4.2.4.2 2 000 h lumen maintenance	All products	*Define maximum number of samples that may fail specified lumen maintenance criteria out of the number that are tested.*
Fluorescent light durability	4.2.4.3 Fluorescent light durability	Products with fluorescent lights	*Define maximum number of failures out of the number that are tested.*
AC-DC charger safety	4.2.11.1 Product and manufacturer information 4.2.11.3 Third-party marks and certifications	Products with AC-DC chargers included	*Define acceptable safety approval marks and certifications for AC-DC chargers.*
Hazardous substances ban	4.2.2.4 Energy storage system information 4.2.2.6 Battery general aspects 4.2.11.1 Product and manufacturer information	All products	*Define allowable battery chemistries.*
Cable specifications	4.2.11.1 Product and manufacturer information 4.2.11.3 Third-party marks and certifications	All products	*Define acceptable approval marks and certifications for outdoor cables*
Circuit and overload protection, PV overvoltage protection, and miswiring protection	4.2.7.3 Circuit and overload protection	All products	*Define maximum number of failures and number of samples to be tested*

Table 5 – End user support standards

Truth-in-advertising criterion	Aspect(s) considered in assessment	Requirement
Information on product design, utilization, and care	4.2.2.7 Packaging and user's manual information	*Define if there are requirements for consumer-facing information on packaging or in a user's manual, such as end-of-life disposal instructions, specifications of replaceable components, and instructions for product installation and maintenance.*
Other	4.2.2.11 Other visual screening results	*Define other product requirements that support end users to maintain the quality of the product.*

5.4.2.6 Warranty requirements

The product shall meet each of the end user support requirements listed in Table 6.

Table 6 – End user support requirements

Support type	Aspect(s)	Requirement
Maintenance and warranty terms	4.2.2.8 Warranty information	*Define minimum warranty requirements (length, components covered, etc.)*
Service capabilities	4.2.11.2 Warranty coverage	*Define "on the ground" requirements for warranty service (typically only for projects in a specific location)*

IECNORM.COM : Click to view the full PDF of IEC TS 62257-9-5:2016 RLV
Withdrawn

5.4.3 Tolerances

Tolerances are an allowable deviation from the target value for a particular criterion in a product specification and are part of the product specification. In the case of truth-in-advertising, the target value is what is advertised. Durability tests and other pass/fail criteria also have a target – passing the test.

Tolerances should be set carefully, considering how the measured or observed values from a test (with a limited number of samples) characterize the true quality or performance aspects of every product in the market. The sample size, expected manufacturing tolerance, and testing uncertainty should each be considered.

There are trade-offs between protecting buyers/end users and suppliers from "false positive" and "false negative" results, respectively. Tighter tolerance tends to protect buyers/end users better from poor quality or performance products but will also result in a higher number of good quality or performance products being excluded based on non-representative sampling or test results. The dynamic is reversed for looser tolerances.

The type of tolerance depends on the aspect being specified:

a) Qualitative: aspects that are descriptive (e.g. type of light source) do not typically have a tolerance.

b) Numeric: aspects that are described with a measured value (e.g. battery capacity) should have a tolerance defined in terms of percent deviation of the average DUT measurement from a particular value. Often, it is allowable for the test result to deviate in one "direction" but not the other. For instance, it is allowable to over-perform on the run time but not underperform. There may also be a tolerance defined for the variance in results of the DUT.

   In general, the percent deviation from a target value is calculated using the following formula:

$$D = 100\,\% \cdot \frac{x_{\text{target}} - x_{\text{meas}}}{x_{\text{target}}}$$

   where:

   D is the percent deviation in a numeric value;

   x_{target} is the target value;

   x_{meas} is a measured value or the average of the measured values for each sample.

c) Boolean: aspects that are described in terms of "pass/fail" (e.g. drop test) should have a tolerance defined in terms of the number of allowable failures out of a set number of trials or tests. Note that the statistical power of Boolean results for predicting population pass/fail rates is not very high with small sample sizes. The implication is that it is not possible to accurately predict population failure rates for a particular aspect from a small sample size, and it is often appropriate to allow some small but reasonable failure rate to avoid false negative results.

5.4.4 Quality standards criteria

5.4.4.1 General

Subclause 5.4.4 describes the quality standards aspects and give guidance on how to implement a quality standard.

There are several categories of quality criteria listed below. For each category, it is important for a set of quality standards to specify:

- which aspects are referenced by the criteria,
- what level of failure or minimum quality level is acceptable for each aspect, and

IECNORM.COM : Click to view the full PDF of IEC TS 62257-9-5:2016 RLV
Withdrawn

- which product categories are subject to each criterion if there are differences across categories.

5.4.4.2 Truth-in-advertising

The goal of a truth-in-advertising standard (see Table 7) is to protect buyers and end users from false advertising claims. It is particularly important to ensure that the description of advertised values corresponds with test results in cases where buyers (anywhere in the supply chain) will make product purchasing decisions based partly or solely on advertising and packaging or where users have expectations set by them.

In practice it is ideal to check any advertised quality or performance statements against the test results, keeping in mind that often the framing or messaging for advertised statements is different from test conditions and that there is always inherent uncertainty in the test result. In cases where the advertised values will not be directly comparable to test results, care should be taken to avoid wrongly identifying false advertising while maintaining vigilance for buyers.

For aspects that are described with numeric information, a tolerance should be defined for truth-in-advertising.

For aspects that are described with qualitative or Boolean information, judgement is required to discern if the test results match advertised values.

Table 7 – Truth-in-advertising criteria for quality standards

Truth-in-advertising criterion	Aspect(s) considered in assessment	Standard specification	Remarks
System performance tolerance – numeric ratings	4.2.8 Performance aspects 4.2.9 Light output aspects Others, if applicable	The tolerance between the rated performance and measured performance.	These are key aspects for end user experiences with the product, but also tend to have test results with higher uncertainty due to a combination of intrinsic manufacturing variation and test uncertainty due to the system-level nature of the aspects.
System components tolerance – numeric ratings	4.2.5 Battery performance aspects 4.2.6 Solar module aspects 4.2.7.1 Appliance voltage compatibility 4.2.7.2 Power consumption 4.2.7.4 DC ports Others, if applicable	The tolerance between the rated performance and measured performance.	These aspects, while important, have less impact on the overall user experience in general. They are more important for identifying replacement parts.
Other numeric ratings tolerance	Multiple	The tolerance between the rated performance and measured performance.	n/a

IECNORM.COM : Click to view the full PDF of IEC TS 62257-9-5:2016 RLV
Withdrawn

Truth-in-advertising criterion	Aspect(s) considered in assessment	Standard specification	Remarks
Overall truth-in-advertising statement	Multiple	Describe the general policy for interpreting truth-in-advertising requirements. Suggested statement: "All advertised features shall be functional. Any description of the product that appears on the packaging, inside the package, and in any other medium (e.g. internet) should be truthful and accurate. No statements should mislead buyers or end users about the features or utility of the product. Any user interfaces (charge indicators, SOC estimates, etc.) shall be accurate."	It is important to lay out a broad expectation of truth-in-advertising and to interpret it on a case-by-case basis.

Table 8 includes notes with guidance on aspects that are often part of a truth-in-advertising check because they are commonly advertised.

Table 8 – Remarks on common truth-in-advertising aspects

Aspect(s)	Remarks
4.2.8.2 Daily energy service	Depends on the desired services/appliances.
4.2.8.5 Lighting full-battery run time	Depends on the setting.
4.2.8.3 Solar-day lighting run time	Depends on the setting and often depends on the assumptions about solar resource, which is location-dependent.
4.2.8.6 Grid-charge run time	Depends on the setting.
4.2.8.7 Electromechanical charge ratio	Depends on the setting.
4.2.9.1 Average luminous flux output	Normally listed as peak luminous flux instead, but other times as the average during discharge, which is more representative of typical service levels.
4.2.2.4 Energy storage system information 4.2.2.6 Battery general aspects 4.2.5 Battery performance aspects 4.2.2.5 Battery easy replaceability	Package type, nominal voltage, capacity are all important for understanding if spares will be available; the replaceability determines if it is easy to service.
4.2.5 Battery performance aspects 4.2.2.4 Energy storage system information 4.2.2.6 Battery general aspects	This information is useful for ensuring the correct replacement battery can be obtained.
4.2.9.3 Average light distribution characteristics	Peak illuminance at a specified distance is often advertised in lieu of luminous flux. It is important to carefully adjust the test result to match the distance specified in the advertised value using known light propagation relationships ("inverse square law").
4.2.6 Solar module aspects	Peak power capacity and type are often listed.
4.2.2.9 Auxiliary outlets, ports and adapters information 4.2.2.10 Appliances information	The presence of functional auxiliary features (e.g. a mobile phone charger or USB power source) and available appliances (e.g. fan, radio or television) can be very important to some end users.
4.2.3.1 Water protection – enclosure 4.2.3.2 Water protection – circuit protection and drainage	Ensure that there is no information that misleads consumers about the level of protection afforded them by the combination of the enclosure and other water protection systems.
4.2.4.2 2 000 h lumen maintenance	Lifetime is often given for much longer durations (e.g. 20 000 h). These may be compared to the 2 000 h lifetime to ensure the claim is possible.

IECNORM.COM : Click to view the full PDF of IEC TS 62257-9-5:2016 RLV
Withdrawn

5.4.4.3 Safety and durability

5.4.4.3.1 General

Safety and durability criteria protect the user from harm and the product from early failure during typical use. It is important to balance the safety and durability requirements with cost implications and reasonable expectations of consumer care, or the safety and durability criteria risk being over-prescribed. It is helpful to consider the expected minimum product lifetime when determining durability-related criteria.

For pass/fail tests, tolerances for failure rates should be specified (see Table 9).

Table 9 – Safety and durability criteria for quality standards *(1 of 2)*

Safety or durability criterion	Aspect(s) considered in assessment	Standard specification	Notes
Level of water exposure protection (overall, technical, or enclosure-only)	4.2.3.1 Water protection – enclosure 4.2.3.2 Water protection – circuit protection and drainage 4.2.3.3 Water protection – overall 4.2.3.4 Water protection – solar module 4.2.11.1 Product and manufacturer information 4.2.2.7 Packaging and user's manual information	The required level of water protection (see list below) and which aspects may contribute to protection. Levels of water protection: No protection Occasional rain Frequent rain Permanent outdoor exposure Permanent exposure in context of rooftop installation for PV modules	The degree of protection should include consideration of product category and expected exposure. Specify the aspects that may contribute to the level of water exposure protection by choosing an overall, technical, or enclosure-only criterion.
Physical ingress protection	4.2.3.5 Physical ingress protection 4.2.3.6 Physical ingress protection solar module	The required level of physical ingress protection in terms of the minimum IP class.	Degree of protection should include consideration of product category and expected exposure. Also, consider how connectors will be incorporated. Most external power connectors are not protected above IP2x.
Mechanical durability – drop test	4.2.3.7 Drop resistance	The required success rates in the drop test for functionality and safety (two success rates).	Failure allowance should consider Boolean nature of results and consider product category (i.e. fixed products are unlikely to be dropped compared to portable products).
Mechanical durability – goosenecks and moving parts	4.2.3.8 Gooseneck and moving part durability	The required success rates in the gooseneck and moving part durability test for functionality and safety (two success rates).	Only applies to products with a gooseneck or moving parts.
Mechanical durability – connectors	4.2.3.9 Connector durability	The required success rates in the connector test for functionality and safety (two success rates).	Failure allowance should consider Boolean nature of results.
Mechanical durability – switches	4.2.3.10 Switch durability	The required success rates in the switch test for functionality and safety (two success rates).	Failure allowance should consider Boolean nature of results.
Mechanical durability – strain relief	4.2.3.11 Strain relief durability	The required success rates in the switch test for functionality and safety (two success rates).	Failure allowance should consider Boolean nature of results.
Workmanship	4.2.3.12 Wiring quality	The required success rate for each aspect of the wiring quality inspection.	Failure allowance should consider the prevalence of each fault type.

IECNORM.COM : Click to view the full PDF of IEC TS 62257-9-5:2016 RLV
Withdrawn

Table 9 *(2 of 2)*

Safety or durability criterion	Aspect(s) considered in assessment	Standard specification	Remarks
Battery durability	4.2.3.13 Battery protection strategy 4.2.5.3 Battery storage durability 4.2.11.1 Product and manufacturer information 4.2.11.3 Third-party marks and certifications	The guidelines for determining if batteries are well protected from early failure and if users are protected from potential harm due to battery failure.	Be careful not to over-prescribe the requirements, since there are a wide range of battery protection strategies that can provide satisfactory results – particularly for emerging chemistries.
Lumen maintenance	4.2.4.2 2 000 h lumen maintenance	The minimum average level of lumen maintenance after 2 000 h and the required success rate on a sample-to-sample basis.	Consider the expected rate of use and desired product lifetime.
Fluorescent light durability	4.2.4.3 Fluorescent light durability	The required success rate for each sample in additional tests for fluorescent light durability.	Failure allowance should consider Boolean nature of results.
AC-DC charger safety	4.2.11.1 Product and manufacturer information 4.2.11.3 Third-party marks and certifications	The guidelines for determining if AC-DC chargers have acceptable safety approval marks and certifications.	Self-certification marks are not necessarily meaningful if no market oversight exists.
Hazardous substances ban	4.2.2.4 Energy storage system information 4.2.2.6 Battery general aspects 4.2.11.1 Product and manufacturer information	The guidelines for determining allowable battery chemistries.	A hazardous substance ban could apply to product components beyond the battery, though monitoring and enforcement is difficult in most markets.
Cable specifications	4.2.11.1 Product and manufacturer information 4.2.11.3 Third-party marks and certifications	The guidelines for determining if outdoor cables have acceptable safety approval marks and certifications.	Self-certification marks are not necessarily meaningful if no market oversight exists.
Circuit and overload protection, PV overvoltage protection, and miswiring protection	4.2.7.3 Circuit and overload protection	The required success rate and number of samples required for each protection test.	Failure allowance should consider Boolean nature of results, while sample number should consider the fact that each test is destructive.

IECNORM.COM : Click to view the full PDF of IEC TS 62257-9-5:2016 RLV
Withdrawn

5.4.4.3.2 Water exposure protection considerations

The specifying organization should consider several factors when establishing water exposure protection requirements for solar lighting products. The product category (as outlined in 4.1.2) is primarily responsible for determining these requirements, as some products are more likely than others to be exposed to water based on the product design. Cost is also a consideration, as products designed to be resistant to higher levels of water exposure are often more expensive because of the additional manufacturing costs associated with sealing the enclosure or internal circuit elements.

Table 10 describes how various levels of water protection are determined based on a combination of laboratory test results, product design and manufacturing information, and consumer information. The levels of protection are:

- No protection
- Occasional rain
- Frequent rain
- Permanent outdoor exposure
- Permanent exposure in context of rooftop installation for PV modules

The results of an assessment will include several "types" of water protection level. A quality standard will need to specify which type is applicable. The types are:

- Overall protection: water protection by all the potential sources, including user behaviour
- Technical protection: protection from all product design and manufacturing aspects
- Enclosure-only protection: protection from the enclosure only

Table 10 – Recommended level of water protection by product category

Product category	Recommended level of water protection	Remarks
Fixed separate (indoor)	No protection	Products intended for indoor use are unlikely to be exposed to water and do not require water protection.
Portable separate	Occasional rain	Portable products can experience occasional water exposure in service and should have some degree of water protection.
Portable integrated	Frequent rain	Portable integrated products are likely to be exposed to water when left outside to solar charge and should have good water exposure protection.
Fixed integrated (outdoor)	Permanent outdoor exposure	Outdoor products are certain to be exposed to rain and should have a high degree of water exposure protection.
Separate PV module	Permanent rooftop installation for PV modules	Separate PV modules are certain to be exposed to rain, and any sensitive electronics should have a high degree of water exposure protection.

5.4.4.4 End user support

End user support criteria describe the information (labelling, instructions, and built-in indicators) that enables end users to maintain and fully realize the potential of a device (Table 11).

Table 11 – End user support criteria for quality standards

End user support criterion	Aspect(s) considered in assessment	Standard specification	Remarks
Information on product design, utilization, and care	4.2.2.7 Packaging and user's manual information	Requirements for end user information.	Define if there are requirements for consumer-facing information on packaging or in a user's manual. In some cases, a specific piece of information has implications for the required level of quality in another criterion (e.g. advising the user to protect the device from exposure to water on the packaging or in the user's manual may warrant a reduction in the requirements for water protection defined by 4.2.3.1 and 4.2.3.2).
Other	4.2.2.11 Other visual screening results	Requirements for particular aspects of the visual screening.	Define if there are requirements for other aspects of end user support (e.g. indicator lights). As with requirements for consumer-facing information, these requirements should be added with care to avoid over-prescribing.

IECNORM.COM : Click to view the full PDF of IEC TS 62257-9-5:2016 RLV

5.4.5 Warranty requirements criteria

Warranty requirements are generally narrow in scope, focusing on the minimum duration and coverage for product warranties. In situations where there is a specific need for service in a particular location, service capabilities may be added to the warranty requirements. Table 12 lists criteria that are included in a warranty standard.

Table 12 – Criteria for warranty standards

End user support criterion	Aspect(s) considered in assessment	Standard specification	Notes
Maintenance and warranty terms	4.2.2.8 Warranty information	Minimum warranty duration and coverage.	Define the minimum warranty terms with consideration for the implications on availability of service and reasonable expectations for guaranteed lifetime.
Service capabilities	4.2.11.2 Warranty coverage	Minimum availability of service to end users in a particular location	These requirements are very specific to "local" projects typically.

6 Quality test method

6.1 General

The quality test method (QTM) is a rigorous set of tests with a relatively large sample size that uses randomly procured samples. It is the most stringent set of tests in this part of IEC 62257 and is appropriate for:

- qualification for market support programmes, and
- generating information for third-party verified specification sheets.

6.2 Applications

QTM tests can support a broad range of quality assurance needs where rigorous, unbiased test results are required. Table 13 lists examples of how they are applied depending on the type of quality assurance framework.

Table 13 – Applications of product specifications

Type of QA framework	Example(s) of applying Clause 6
General market support	Require QTM results for qualifying for market support. Accept QTM results from any accredited laboratory. Use QTM results to produce standardized specification sheets.
Manufacturing/ distribution	Use QTM results to assess the full production/supply chain. Require QTM results for assessing potential business partners. Accept QTM results from any accredited laboratory.
Bulk procurement	Require QTM results for assessing potential suppliers. Accept QTM results from any accredited laboratory.
Trade regulation	Require QTM results for qualifying for tax exemption. Accept QTM results from any accredited laboratory.

6.3 Sampling requirements

The product samples should be selected and shipped to the test lab according to the random sampling guidelines outlined in Annex E.

IECNORM.COM : Click to view the full PDF of IEC TS 62257-9-5:2016 RLV
Withdrawn

The recommended number of samples to procure for QTM testing is 18: six each for two parallel batches plus six spares.

6.4 Laboratory requirements

The test laboratory should be properly trained to undertake the test methods described below and accredited by an international or national standards body (e.g. ILAC using ISO 17025). The measurement equipment should be calibrated against reference instruments annually, or as directed by the equipment manufacturer or laboratory accreditation organization.

6.5 Testing requirements

Each of the aspects listed in Table 14 should be measured where they are applicable to a product. It is not necessary that each aspect be measured on each sample under test, but it is important to note in the test results which samples were the source of each result in an unambiguous way. A general description of the test method family for each aspect is listed for informative purposes only.

For products with multiple settings, at least one set of test results should fully characterize the performance on the highest light output setting. Additional settings may be measured at the discretion of the test laboratory to verify truth in advertising statements from the manufacturer when other light settings are advertised, or as required in the product specification.

Table 14 – QTM testing requirements *(1 of 3)*

Aspect	Reference	Applicability	Sample size	Test classes	Test method family
Product design, manufacture, and marketing aspects	**4.2.2**				
Arrangement of components	4.2.2.1	All products	1	A	Visual screening
Charging system information	4.2.2.2	All products	1	A	Visual screening
Lighting system information	4.2.2.3	All products	1	A	Visual screening
Energy storage system information	4.2.2.4	All products	1	A	Visual screening
Battery easy replaceability	4.2.2.5	All products	1	A	Visual screening
Battery general aspects	4.2.2.6	All products	1	A	Visual screening
Packaging and user's manual information	4.2.2.7	All products	1	A	Visual screening
Warranty information	4.2.2.8	All products	1	A	Visual screening
Auxiliary features information	4.2.2.9	All products	1	A	Visual screening
Appliances information	4.2.2.10	All products	1	A	Visual screening
Other visual screening results	4.2.2.11	All products	1	A	Visual screening

IECNORM.COM : Click to view the full PDF of IEC TS 62257-9-5:2016 RLV
Withdrawn

Table 14 *(2 of 3)*

Aspect	Reference	Applicability	Sample size	Test classes	Test method family
Product durability and workmanship aspects	**4.2.3**				
Water protection – enclosure and PV module	4.2.3.1 4.2.3.4	All products	1	A, B	IP class assessment
Water protection – circuit protection and drainage	4.2.3.2	At the request of the testing client	1	A	n/a
Water protection – overall	4.2.3.3	All products	1	A	IP class assessment
Physical ingress protection	4.2.3.5 4.2.3.6	All products	1	A, B	IP class assessment
Drop resistance	4.2.3.7	Portable components, excluding appliances such as radios, small TVs, DVD players, and fans that are not typically expected to meet durability standards	6	A, B	Durability
Gooseneck and moving part durability	4.2.3.8	Products with a gooseneck/moving part	6	A	Durability
Connector durability	4.2.3.9	All products	6	A	Durability
Switch durability	4.2.3.10	All products	6	A	Durability
Strain relief durability	4.2.3.11	All products	6	A	Durability
Wiring quality	4.2.3.12	All products	6	A	Visual screening
Battery protection strategy	4.2.3.13	All products	6	A	Charge controller testing and Battery storage durability
Lighting durability aspects	**4.2.4**				
2 000 h lumen maintenance	4.2.4.2	All products	6	A	Lumen maintenance
Fluorescent light durability	4.2.4.3	Products with fluorescent light	6	A	Extra tests for fluorescent lights
Battery performance aspects	**4.2.5**				
Battery capacity	4.2.5.1	All products	6	A	Battery tests
Battery round-trip energy efficiency	4.2.5.2	All products	6	A	Battery tests
Battery storage durability	4.2.5.3	All products	6	A	Battery tests
Battery nominal voltage	4.2.5.4	All products	6	A	Battery tests
Solar module aspects	**4.2.6**				
Solar I-V curve parameters	4.2.6.1	All products	6	A, B	Solar module tests
Cable length	4.2.6.2	All products	6	A	Visual screening

IECNORM.COM : Click to view the full PDF of IEC TS 62257-9-5:2016 RLV
Withdrawn

Table 14 *(3 of 3)*

Aspect	Reference	Applicability	Sample size	Test classes	Test method family
Performance aspects	**4.2.8**				
Solar-day lighting run time	4.2.8.3	Solar charged products	6	A	Run time
Lighting full-battery run time	4.2.8.6	All products	6	A	Run time
Grid-charge run time	4.2.8.7	Grid charged products	6	A	Run time
Electromechanical charge ratio	4.2.8.7	Electromechanically charged products	6	A	Run time
Light output aspects	**4.2.9**				
Average luminous flux output	4.2.9.1	All products	6	A	Luminous flux
Full width half maximum (FWHM) angles	4.2.9.2	All products	2	A	Light distribution
Average light distribution characteristics	4.2.9.3	All products	2	A	Light distribution
Colour characteristics	4.2.9.4	All products	6	A	Luminous flux
Circuit efficiency aspects					
Battery-charging circuit efficiency	4.2.10	All products	6	A	Circuit efficiency
Self-certification aspects	**4.2.11**				
Product and manufacturer information	4.2.11.1	All products	n/a	A	Self-reported
Warranty coverage	4.2.11.2	As required for programmes	n/a	A	Self-reported
Third-party marks and certifications	4.2.11.3	All products	n/a	A	Self-reported

6.6 Recommended tests programme

6.6.1 General

The following programme, illustrated in Figure 7, is one strategy to accomplish all the tests in a timely manner.

IECNORM.COM : Click to view the full PDF of IEC TS 62257-9-5:2016 RLV
Withdrawn

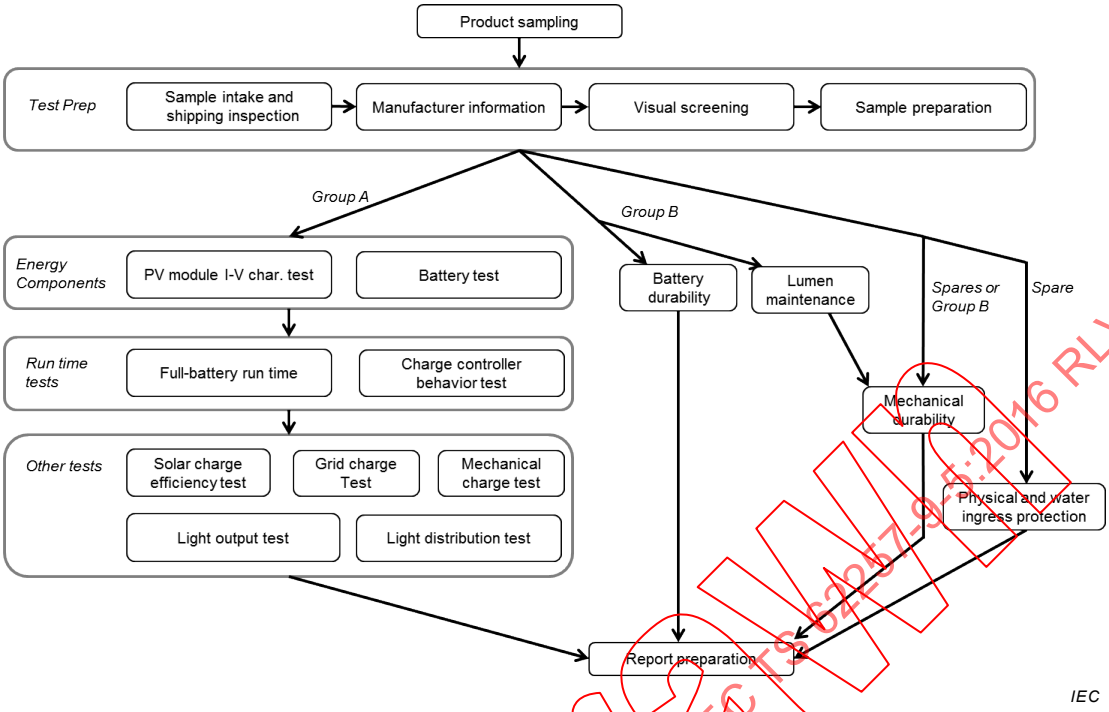

Figure 7 – Recommended sequence of testing for QTM

6.6.2 Test preparation

6.6.2.1 General

The initial intake steps involve ensuring the samples are intact, preparing them for further tests, and requesting self-certification information from the manufacturer.

6.6.2.2 Test sample intake and shipping inspection

The samples should all be inspected for shipping damage, unambiguously labelled for identification during the testing process, and placed into batches.

6.6.2.3 Manufacturer self-reported information

If it has not already been done, the manufacturer (or their proxy) should be contacted to ask for self-certification information that is outlined in Annex D and to inform them the test samples were received.

6.6.2.4 Visual screening

The visual screening should be done before any other tests and before the samples are altered to prepare them for other tests. The visual screening procedure is presented in Annex F.

6.6.2.5 Sample preparation

After the visual screening, prepare the samples for further testing by partially disassembly to provide easy access to various components. Sample preparation procedures are presented in Annex G. All samples, except for spares, shall be prepared.

6.6.3 Batch A tests

6.6.3.1 General

Batch A undergoes the main set of tests.

IECNORM.COM : Click to view the full PDF of IEC TS 62257-9-5:2016 RLV
Withdrawn

6.6.3.2 Energy component tests

6.6.3.2.1 General

Energy component tests can generally be done independently of each other on an ad-hoc basis. The recommendation is to complete them before running system-level tests, or complete them opportunistically as is appropriate.

6.6.3.2.2 Battery test

The battery tests (in particular capacity measurements) should be done before any system-level run time tests to ensure the batteries are "refreshed" from any time they spent in storage before testing. The battery test procedure is presented in Annex K.

6.6.3.2.3 Photovoltaic module I-V characteristics test

Since outdoor solar PV module testing is subject to the availability of a clear "solar window", they are often the most "opportunistic" of the tests in the programme. The outdoor photovoltaic module I-V characteristics test procedure is presented in Annex Q.

For amorphous solar modules, it is important to begin sun soaking the modules immediately after they are received, since at least 30 days of outdoor exposure are needed before the tests commence.

6.6.3.3 Run time tests

6.6.3.3.1 General

The full-battery run time test should be carried out prior to the additional run time related tests. The additional run time related tests require using measured values during the test to determine the specified run time.

6.6.3.3.2 Full-battery run time

It is often convenient to do the full-battery run time test directly after the battery capacity measurements. Cycle the batteries (as is done in the battery capacity measurements) and fully charge them before this test. The full-battery run time test procedure is presented in Annex M.

6.6.3.4 Charge controller behaviour test

The deep-discharge protection charge controller measurement may be incorporated into the full-battery run time. The overcharge protection charge controller measurement requires independent testing. The charge controller behaviour test procedure is presented in Annex S.

6.6.3.5 Full discharge preparation

A full discharge shall be conducted to prepare the sample for the solar charge test. Procedures for a full discharge are presented in Annex N.

6.6.3.6 Other tests

6.6.3.6.1 Solar charge efficiency test

Solar charging efficiency testing shall be commenced after the sample is fully discharged according to the full discharge preparation in Annex N. The solar charge efficiency value is used to determine the solar run time. The solar charge test procedure is presented in Annex R.

IECNORM.COM : Click to view the full PDF of IEC TS 62257-9-5:2016 RLV
Withdrawn

6.6.3.6.2 Grid charge test

Grid charge testing shall be commenced after the sample is fully discharged according to the full discharge preparation in Annex N. The grid charge efficiency value determined by the grid charge test is used to determine the grid run time. The grid charge test procedure is presented in Annex O.

6.6.3.6.3 Electromechanical charge test

Electromechanical charge testing shall be commenced after the sample is fully discharged according to the full discharge preparation in Annex N. The electromechanical charge efficiency value determined by the electromechanical charge test is used to determine the electromechanical charging ratio. The electromechanical charge test procedure is presented in Annex P.

6.6.3.6.4 Light output test

The light output test is not strictly on components, but of a system including a driver, light source, and optical components. However, the system may be treated as a single component if it is separable from the other main components while maintaining the same electrical and thermal characteristics that are present when the product is fully assembled. The light output test procedure should be done after the full-battery run time test and is presented in Annex I.

6.6.3.6.5 Light distribution test

Like the light output test, the light distribution test is not strictly on components, but of a system including a driver, light source, and optical components. However, the system may be treated as a single component if it is separable from the other main components while maintaining the same electrical and thermal characteristics that are present when the product is fully assembled. The light distribution test procedure should be done after the full-battery run time test and is presented in Annex T.

6.6.3.7 Energy service calculations (optional)

The energy service calculations described in Annex GG are used to estimate the system-level run time at a given utility level (e.g. lumens of light, or volume of radio play). The calculations use values from the battery test (Annex K), the solar charge test (Annex R), the assessment of DC ports (Annex EE), generic appliances (Annex HH), Appliance tests (Annex FF), and full-battery run time test (Annex M). All of these tests shall be conducted prior to finalizing the energy service calculations.

6.6.4 Batch B tests

6.6.4.1 General

Batch B undergoes long-term lumen maintenance testing in parallel with Batch A testing.

6.6.4.2 Lumen maintenance test

The batch B samples shall not have undergone any other testing prior to lumen maintenance testing. This test is long-term and is carried out in parallel with those tests undergone by batch A samples. The lumen maintenance test procedure is presented in Annex J.

6.6.4.3 Battery durability test

While the lighting appliances of the batch B samples are connected to power supplies for the lumen maintenance test, the batteries of the batch B samples are tested for durability during storage according to the test procedure in Annex BB. This test is also long-term and is carried out in parallel with the tests undergone by batch A samples.

IECNORM.COM : Click to view the full PDF of IEC TS 62257-9-5:2016 RLV
Withdrawn

6.6.5 Batch C – potentially destructive tests

6.6.5.1 General

In general, it is best to save destructive testing to the end of the test programme to ensure sufficient samples are available in other tests. These tests may be performed on spare samples or batch A or B samples that have finished all other testing.

6.6.5.2 Physical and water ingress protection test

Physical and water ingress protection shall be assessed on samples that have the least amount of impact or adulteration from the testing process. Unused spares should be the preferred samples for this assessment. The physical and water ingress protection test procedure is presented in Annex U. It is also possible for product to be assessed for water protection with the level of water protection procedure, which is presented in Annex V.

6.6.5.3 Mechanical durability test

It is preferable to do durability testing (switches, connectors, gooseneck/moving part, and drop test) on the "spare" samples that have not been altered for testing. However, it is often infeasible to accomplish this if the unadulterated spares are required for other tests and in the best case there will be five unadulterated spares out of the original 18. In this case, the "least modified" samples from Batch A or Batch B should be used. The mechanical durability test procedure is presented in Annex W.

6.6.5.4 Circuit protection tests (optional)

6.6.5.4.1 Output overload protection test

This test assesses whether the DUT is protected against excessive load or short circuits applied to the appliance receptacles and is described in Annex DD. The test is not dependent on any other tests, but is required to be conducted prior to the assessment of DC ports in Annex EE. The test is potentially destructive and should be conducted on either samples that have finished testing in batches B or C, or spare samples that are not required for any other tests.

6.6.5.4.2 Miswiring protection test

This test assesses whether the DUT is protected against improper wiring. The test is not dependent on any other tests, but is potentially destructive and should be conducted on either samples that have finished testing in batches A, B or C, or spare samples that are not required for any other tests. Note there are several situations described in Annex DD in which this test need not be conducted.

6.6.5.4.3 PV overvoltage protection test

The PV overvoltage protection test assesses whether the DUT can withstand a PV overvoltage condition when the battery is disconnected. This test is conducted on only one sample and shall be conducted after performing the photovoltaic module I-V performance test (Annex Q). The test is potentially destructive and should be conducted either on samples that have finished testing in batches A, B or C, or on spare samples. Note there are several situations described in Annex DD in which this test need not be conducted.

6.6.6 Report preparation

After testing is complete and the results are validated, a report is generated and checked for accuracy before submission to the client.

IECNORM.COM : Click to view the full PDF of IEC TS 62257-9-5:2016 RLV
Withdrawn

6.7 Reporting

The report for QTM testing should support any activities that depend on the information from QTM testing.

At a minimum, the report should include the following elements.

a) Informative cover page.

b) Summary page(s).

c) Detailed test reports that include results for the aspects described in 6.5 that were measured at the primary test lab. Required results are listed at the end of each annex.

d) Detailed test reports for tests performed at other labs (e.g. ingress protection test results done at a specialty IP test lab).

e) Annexes that include supplementary images and/or other supporting information.

f) Annexes that indicate manufacturer-provided information and self-certification evidence (e.g. certificates of compliance).

7 Market check method

7.1 General

The market check method (MCM) is a flexible set of tests that is designed for market monitoring and enforcement. The MCM may comprise all the QTM tests, or a targeted subset of the QTM tests. The tests are designed for use in the following situations:

- when a program wants to monitor the on-going quality and performance of previously tested products;
- when there is suspicion that products on the market are substandard compared to those that were originally tested for programme qualification or the production of a standardized specification sheet;
- when a product is partially updated and an update is required for a standardized specification sheet.

MCM testing may be implemented as a two-stage process. In the first stage, which is referred to as primary check testing, the initial screening method (ISM) described in Clause 8 is used with a sample size between two to six. If results from these tests meet or exceed performance from prior QTM testing, no further action is required. However, if the results indicate possible deficiencies relative to the product specification and/or prior QTM test results, additional testing may be used to confirm the problem. This subsequent testing, which is referred to as secondary check testing, will focus only on the aspects of the product that appeared to have deficiencies according to the primary check testing results. The required sample size and allowable test classes for secondary check testing using the MCM should be the same as those required for QTM testing of the same aspect (see 6.5).

Alternatively, if a product is partially updated or only suspected to be substandard in particular aspects, a program may choose to forego the first stage of primary check testing and conduct targeted secondary check testing on only those aspects.

7.2 Applications

MCM tests may have a narrower focus than QTM tests – they may be targeted for determining if a deviation has occurred from previous QTM results for particular aspects. Table 15 lists examples of how MCM tests are applied depending on the type of quality assurance framework.

IECNORM.COM : Click to view the full PDF of IEC TS 62257-9-5:2016 RLV
Withdrawn

Table 15 – Applications of MCM results

Type of QA framework	Example(s) of applying MCM testing
General market support	Use MCM results for market monitoring and enforcement. Use MCM results to update standardized specification sheets. Use MCM results to renew QTM test results.
Manufacturing/distribution	Use MCM results for market monitoring.
Bulk procurement	n/a
Trade regulation	Use MCM results for market monitoring and enforcement.

7.3 Sampling requirements

The test samples should be randomly procured from retail outlets in the market according to procedures in Annex E. In select cases, it may be appropriate to accept samples randomly sampled from a manufacturer's warehouse according to procedures in Annex E.

Enough samples should be provided or selected so it is possible to complete the tests in a timely manner and account for unforeseen needs of additional samples.

The recommended number of samples for primary check testing is six: two per batch plus two spares. The recommended number of samples for secondary check testing will depend on the aspects under test, but may be up to 18: six per batch plus adequate spares.

7.4 Laboratory requirements

The test laboratory should be properly trained to undertake the test methods described below and accredited by an international or national standards body (e.g. ILAC using ISO 17025). The measurement equipment should be calibrated against reference instruments annually, or as directed by the equipment manufacturer or laboratory accreditation organization.

7.5 Testing requirements

Most of the specific test requirements for MCM tests will depend on the aspects that are being tested.

The particular test plan for MCM testing is case-dependent and up to the judgement of the organization or institution who initiates the testing. The following recommendations should be kept in mind when creating MCM test plans.

- Always include a visual screening test to uncover any unexpected changes to the product; be ready to augment the original test plan pending the visual screening results.
- Consider system-level impacts of component changes.

7.6 Recommended tests programme

See 6.6.

7.7 Report requirements

The report for MCM testing should support any activities that depend on the information from MCM testing.

At a minimum, the report should include the following elements:

a) informative cover page;

b) table of contents;

IECNORM.COM : Click to view the full PDF of IEC TS 62257-9-5:2016 RLV
Withdrawn

c) summary page(s);

d) detailed test reports that include results for the aspects described in 7.5;

e) annexes that include images and other supporting information;

f) annexes that indicate manufacturer-provided information and self-certification evidence (e.g. certificates of compliance).

8 Initial screening method

8.1 General

The initial screening method (ISM) is appropriate for preliminary testing and providing quick feedback on product design and performance in absolute terms.

8.2 Applications

ISM tests should be used for obtaining quick, preliminary results to help inform subsequent rounds of testing that confirm the preliminary results. Table 16 lists examples of how they are applied depending on the type of quality assurance framework.

Table 16 – Applications of product specifications

Type of QA framework	Example(s) of applying this Clause 8
General market support	Use ISM results to filter potential organizations/products for targeted support, followed up by QTM testing for those with promise. Use ISM results to trigger MCM testing when there is suspicion of a change in the quality or performance of products in the market.
Manufacturing/distribution	Use ISM results for batch-to-batch monitoring of production runs of shipments.
Bulk procurement	Use ISM results for batch-to-batch monitoring shipments.
Trade regulation	Use ISM results to make preliminary decisions, followed up with QTM testing to confirm results.

8.3 Sampling requirements

The test samples may be provided directly by a manufacturer (or their proxy) or may be randomly procured from the market according to procedures in Annex E.

Enough samples should be provided or selected so it is possible to complete the tests in a timely manner and account for unforeseen needs of additional samples.

The recommended number of samples for ISM testing is three: one each for two parallel batches and one spare.

8.4 Laboratory requirements

The test laboratory should be properly trained to undertake the test methods described below. The measurement equipment should be calibrated against reference instruments annually, or as directed by the equipment manufacturer.

8.5 Testing requirements

Each of the aspects listed in Table 17 should be measured where they are applicable to a product. It is not necessary that each aspect be measured on each sample under test, but it is important to note in the test results which samples were the source of each result in an unambiguous way. A general description of the test method family for each aspect is listed for informative purposes only.

IECNORM.COM : Click to view the full PDF of IEC TS 62257-9-5:2016 RLV
Withdrawn

For products with multiple settings, at least one set of test results should fully characterize the performance on the highest light output setting. Additional settings may be measured at the discretion of the test laboratory to verify truth in advertising statements from the manufacturer when other light settings are advertised, or as required in the product specification.

Table 17 – ISM testing requirements *(1 of 2)*

Aspect	Reference	Applicability	Sample size	Test classes allowed	Test method family
Product design, manufacture, and marketing aspects	**4.2.2**				
Arrangement of components	4.2.2.1	All products	1	A	Visual screening
Charging system information	4.2.2.2	All products	1	A	Visual screening
Lighting system information	4.2.2.3	All products	1	A	Visual screening
Energy storage system information	4.2.2.4	All products	1	A	Visual screening
Battery easy replaceability	4.2.2.5	All products	1	A	Visual screening
Battery general aspects	4.2.2.6	All products	1	A	Visual screening
Packaging and user's manual information	4.2.2.7	All products	1	A	Visual screening
Warranty information	4.2.2.8	All products	1	A	Visual screening
Auxiliary features information	4.2.2.9	All products	1	A	Visual screening
Appliances information	4.2.2.10	All products	1	A	Visual screening
Other visual screening results	4.2.2.11	All products	1	A	Visual screening
Product durability and workmanship aspects	**4.2.3**				
Water protection – enclosure and PV module	4.2.3.1 4.2.3.4	All products	1	A, B	IP class assessment
Water protection – circuit protection and drainage	4.2.3.2	At the request of the testing client	0	A	n/a
Water protection – overall	4.2.3.3	All products	1	A	IP class assessment
Physical ingress protection – enclosure and PV module	4.2.3.5 4.2.3.6	All products	1	A, B	IP class assessment
Drop resistance	4.2.3.7	All products	1	A, B	Durability
Gooseneck and moving part durability	4.2.3.8	Products with a gooseneck/moving part	1	A	Durability
Connector durability	4.2.3.9	All products	1	A	Durability
Switch durability	4.2.3.10	All products	1	A	Durability
Strain relief durability	4.2.3.11	All products	1	A	Durability
Wiring quality	4.2.3.12	All products	1	A	Visual screening

IECNORM.COM : Click to view the full PDF of IEC TS 62257-9-5:2016 RLV
Withdrawn

Table 17 *(2 of 2)*

Aspect	Reference	Applicability	Sample size	Test classes allowed	Test method family
Battery protection strategy	4.2.3.13	All products	1	A	Charge controller testing
Lighting durability aspects	**4.2.4**				
500 hour lumen maintenance	4.2.4.1	All products	1	A	Lumen maintenance
Battery performance aspects	**4.2.5**				
Battery capacity	4.2.5.1	All products	1	A	Battery tests
Battery round-trip energy efficiency	4.2.5.2	All products	1	A	Battery tests
Battery storage durability	4.2.5.3	All products	1	A	Battery tests
Battery voltage	4.2.5.4	All products	1	A	Battery tests
Solar module aspects	**4.2.6**				
Solar I-V curve parameters	4.2.6.1	All products	1	A, B	Solar module tests
Solar module cable length	4.2.6.2	All products	1	A	Visual screening
Performance aspects	**4.2.8**				
Solar-day lighting run time	4.2.8.3	All products	1	A	Run time
Lighting full-battery run time	4.2.8.5	All products	1	A	Run time
Grid-charge run time	4.2.8.6	Grid charged products	1	A	Run time
Electromechanical charge ratio	4.2.8.7	Electromechanically charged products	1	A	Run time
Light output aspects	**4.2.9**				
Average luminous flux output	4.2.9.1	All products	1	A	Luminous flux
Full width half maximum (FWHM) angles	4.2.9.2	All products	1	A	Light distribution
Average light distribution characteristics	4.2.9.3	All products	1	A	Light distribution
Colour characteristics	4.2.9.4	Optional	1	A,B	Luminous flux
Circuit efficiency aspects					
Battery-charging circuit efficiency	4.2.10	Optional	1	A	Circuit efficiency
Self-certification aspects	**4.2.11**				
Product and manufacturer information	4.2.11.1	All products	1	A	Self-reported
Warranty coverage	4.2.11.2	All products	1	A	Self-reported
Third-party marks and certifications	4.2.11.3	Optional	1	A	Self-reported

IECNORM.COM : Click to view the full PDF of IEC TS 62257-9-5:2016 RLV
Withdrawn

8.6 Recommended tests programme

See 6.6.

8.7 Reporting

The report for ISM testing should support any activities that depend on the information from ISM testing.

At a minimum, the report should include the following elements:

a) informative cover page;

b) table of contents;

c) summary page(s).

d) detailed test reports that include results for the aspects described in 8.5;

e) annexes that include images and other supporting information;

f) annexes that indicate manufacturer-provided information and self-certification evidence (e.g. certificates of compliance).

9 Accelerated verification method

9.1 General

The accelerated verification method (AVM) is an optional pathway to enable expedited entry to markets or market support programmes. The AVM includes a 2-step process of verification entry testing and follow-up QTM testing. Results from verification entry testing may qualify a product for market support until the results are verified through a more thorough follow-up QTM test. It is recommended that this pathway only be offered to manufacturers who meet specified eligibility criteria. These three elements of the AVM are described below:

- Eligibility based on a manufacturer's experience and historical performance with the off-grid lighting market support programme. Recommended eligibility criteria should consider the number of products that a manufacturer has successfully tested with the programme, any recent instances in which the manufacturer has submitted products for testing that did not meet the quality standards, as well as the manufacturer's conduct in the market and communication with the market support programme.
- Expedited verification entry testing equivalent to an ISM test with a sample size of two. When arranging for AVM verification entry testing, a mechanism should be included to cover the cost of follow-up testing and associated administrative costs.
- Follow-up QTM testing conducted shortly after verification entry test is finished and the product is commercially available in markets. Poor performance in follow-up tests may be accompanied by penalties enacted by the market support programme to incentivize compliance. Recommended penalties include loss of programme support, loss of eligibility to use the AVM pathway and monetary penalties.

9.2 Applications

The AVM pathway is only recommended for manufacturers who meet specified eligibility criteria and for products that are reasonably expected to meet the rigors of the QTM test. The AVM enables these select products to undergo initial, expedited testing with samples that are representative of the products the manufacturer plans to distribute, but are not necessarily from a full production run. Table 18 lists examples of how AVM tests are applied depending on the type of quality assurance framework:

IECNORM.COM : Click to view the full PDF of IEC TS 62257-9-5:2016 RLV
Withdrawn

Table 18 – Applications of AVM results

Type of QA framework	Example(s) of applying AVM testing
General market support	Require AVM verification entry test results for qualifying for temporary market support. Use follow-up QTM results to continue market support. Accept AVM results from any accredited laboratory. Use AVM verification entry test results to produce standardized specification sheets. Update these standardized specification sheets with results from the follow-up QTM test.
Manufacturing/distribution	Use AVM verification entry test and follow-up QTM results to assess the full production/supply chain. Require AVM verification entry test and follow-up QTM for assessing potential business partners. Accept AVM results from any accredited laboratory.
Bulk procurement	Require AVM verification entry test and follow-up QTM for assessing potential suppliers. Accept AVM results from any accredited laboratory.
Trade regulation	Require AVM verification entry test and follow-up QTM results for qualifying for tax exemption. Accept AVM results from any accredited laboratory.

9.3 Sampling requirements

9.3.1 General

Testing for the AVM is segmented into two parts: verification entry testing and follow-up QTM testing.

9.3.2 Verification entry testing

The test samples for verification entry testing may be provided directly by a manufacturer (or their proxy) or may be randomly procured from the market according to procedures in Annex E.

The manufacturer shall provide a declaration to accompany the products which states: "A) the samples provided for testing are an accurate representation of the final production model that they plan to distribute, and B) the product is expected to meet the quality standards of the off-grid lighting market support programme." Manufacturers shall also submit documentation to assist with follow-up QTM testing and market check testing, including, but not limited to:

- an annual report listing the main markets in which their quality-verified products are being sold, differentiated by product model name,
- the names and contact details of the principal distributors to whom they sell their products,
- annual shipment figures (for the previous year) of quality-verified products, and
- the intended markets and distributors that will be used for the product under test.

Enough samples should be provided or selected so it is possible to complete the tests in a timely manner and account for unforeseen needs of additional samples. The recommended number of samples for the two-sample ISM testing is seven: two each for two parallel batches and three spares.

9.3.3 Follow-up QTM testing

The test samples for follow-up QTM testing should either be randomly procured from retail outlets in the market or randomly sampled from a manufacturer's warehouse according to procedures in Annex E.

Enough samples should be provided or selected so it is possible to complete the tests in a timely manner and account for unforeseen needs of additional samples. The recommended number of samples to procure for follow-up QTM testing is 18: six each for two parallel batches plus six spares.

IECNORM.COM : Click to view the full PDF of IEC TS 62257-9-5:2016 RLV
Withdrawn

9.4 Laboratory requirements

The test laboratory should be properly trained to undertake the test methods described below and accredited by an international or national standards body (e.g. ILAC using ISO 17025). The measurement equipment should be calibrated against reference instruments annually, or as directed by the equipment manufacturer or laboratory accreditation organization.

9.5 Testing requirements

9.5.1 General

Testing requirements for the AVM are segmented into two parts: verification entry testing and follow-up QTM testing.

9.5.2 Verification entry testing

Each of the aspects listed in Table 19 should be measured where they are applicable to a product. The list of tests is equivalent to that of the ISM, but all tests, aside from some select visual screening and IP assessments, are conducted with a sample size of two.

It is not necessary that each aspect be measured on each sample under test, but it is important to note in the test results which samples were the source of each result in an unambiguous way. A general description of the test method family for each aspect is listed for informative purposes only.

For products with multiple settings, at least one set of test results should fully characterize the performance on the highest light output setting. Additional settings may be measured at the discretion of the test laboratory to verify truth in advertising statements from the manufacturer when other light settings are advertised, or as required in the product specification.

IECNORM.COM : Click to view the full PDF of IEC TS 62257-9-5:2016 RLV
Withdrawn

Table 19 – AVM verification entry testing requirements *(1 of 2)*

Aspect	Reference	Applicability	Sample size	Test classes allowed	Test method family
Product design, manufacture, and marketing aspects	**4.2.2**				
Arrangement of components	4.2.2.1	All products	1	A	Visual screening
Charging system information	4.2.2.2	All products	1	A	Visual screening
Lighting system information	4.2.2.3	All products	1	A	Visual screening
Energy storage system information	4.2.2.4	All products	1	A	Visual screening
Battery easy replaceability	4.2.2.5	All products	1	A	Visual screening
Battery general aspects	4.2.2.6	All products	1	A	Visual screening
Packaging and user's manual information	4.2.2.7	All products	1	A	Visual screening
Warranty information	4.2.2.8	All products	1	A	Visual screening
Auxiliary features information	4.2.2.9	All products	1	A	Visual screening
Appliances information	4.2.2.10	All products	1	A	Visual screening
Other visual screening results	4.2.2.11	All products	1	A	Visual screening
Product durability and workmanship aspects	**4.2.3**				
Water protection – enclosure and PV module	4.2.3.1 4.2.3.4	All products	1	A, B	IP class assessment
Water protection – circuit protection and drainage	4.2.3.2	At the request of the testing client	1	A	n/a
Water protection – overall	4.2.3.3	All products	1	A	IP class assessment
Physical ingress protection – enclosure and PV module	4.2.3.5 4.2.3.6	All products	1	A, B	IP class assessment
Drop resistance	4.2.3.7	All products	2	A, B	Durability
Gooseneck and moving part durability	4.2.3.8	Products with a gooseneck/moving part	2	A	Durability
Connector durability	4.2.3.9	All products	2	A	Durability
Switch durability	4.2.3.10	All products	2	A	Durability
Strain relief durability	4.2.3.11	All products	2	A	Durability
Wiring quality	4.2.3.12	All products	2	A	Visual screening
Battery protection strategy	4.2.3.13	All products	2	A	Charge controller testing
Lighting durability aspects	**4.2.4**				
500 h lumen maintenance	4.2.4.1	All products	2	A	Lumen maintenance

IECNORM.COM : Click to view the full PDF of IEC TS 62257-9-5:2016 RLV
Withdrawn

Table 19 *(2 of 2)*

Aspect	Reference	Applicability	Sample size	Test classes allowed	Test method family
Battery performance aspects	**4.2.5**				
Battery capacity	4.2.5.1	All products	2	A	Battery tests
Battery round-trip energy efficiency	4.2.5.2	All products	2	A	Battery tests
Battery storage durability	4.2.5.3	All products	2	A	Battery tests
Battery voltage	4.2.5.4	All products	2	A	Battery tests
Solar module aspects	**4.2.6**				
Solar I-V curve parameters	4.2.6.1	All products	2	A, B	Solar module tests
Solar module cable length	4.2.6.2	All products	2	A	Visual screening
Performance aspects	**4.2.8**				
Solar-day lighting run time	4.2.8.3	All products	2	A	Run time
Lighting full-battery run time	4.2.8.5	All products	2	A	Run time
Grid-charge run time	4.2.8.6	Grid charged products	2	A	Run time
Electromechanical charge ratio	4.2.8.7	Electromechanically charged products	2	A	Run time
Light output aspects	**4.2.9**				
Average luminous flux output	4.2.9.1	All products	2	A	Luminous flux
Full width half maximum (FWHM) angles	4.2.9.2	All products	2	A	Light distribution
Average light distribution characteristics	4.2.9.3	All products	2	A	Light distribution
Colour characteristics	4.2.9.4	Optional	2	A, B	Luminous flux
Circuit efficiency aspects					
Battery-charging circuit efficiency	4.2.10	Optional	2	A	Circuit efficiency
Self-certification aspects	**4.2.11**				
Product and manufacturer information	4.2.11.1	All products	2	A	Self-reported
Warranty coverage	4.2.11.2	All products	2	A	Self-reported
Third-party marks and certifications	4.2.11.3	Optional	2	A	Self-reported

IECNORM.COM : Click to view the full PDF of IEC TS 62257-9-5:2016 RLV

9.5.3 Follow-up QTM testing

See 6.5. Each of the aspects listed in Table 14 should be measured where they are applicable to a product. It is not necessary that each aspect be measured on each sample under test, but it is important to note in the test results which samples were the source of each result in an unambiguous way. A general description of the test method family for each aspect is listed for informative purposes only.

For products with multiple settings, at least one set of test results should fully characterize the performance on the highest light output setting. Additional settings may be measured at the discretion of the test laboratory to verify truth in advertising statements from the manufacturer when other light settings are advertised, or as required in the product specification.

9.6 Recommended tests programme

See 6.6.

9.7 Report requirements

The report for AVM testing should support any activities that depend on the information from AVM testing.

At a minimum, the report(s) should include the following elements:

a) informative cover page;
b) table of contents;
c) summary page(s);
d) detailed test reports that include results for the aspects described in 9.5;
e) annexes that include images and other supporting information;
f) annexes that indicate manufacturer-provided information and self-certification evidence (e.g. certificates of compliance).

10 Standardized specification sheets

10.1 General

Standardized specification sheets (SSS) are a way to communicate quality assurance information to the market. They include key information for potential buyers of off-grid lighting products. The information in SSS is based on standardized test results from QTM testing.

10.2 Applications

10.2.1 General

SSS requirements are useful to understand for the broad market, since they are typically the primary way to communicate and share QTM test results. Table 20 lists examples of how they are applied depending on the type of quality assurance framework:

Table 20 – Applications of product specifications

Type of QA framework	Example(s) of applying this Clause 10
General market support	Administer a SSS third-party verification programme.
Manufacturing/ distribution	Use SSS to advertise products.
Bulk procurement	Use SSS from third-party verified sources to screen potential products for purchase.
Trade regulation	Use SSS from third-party verified sources to screen applicants for import/tax programmes.

10.2.2 Guidance

A SSS guidelines document should provide a framework for providing clear information to buyers to enable fair comparisons to be made between different products. In general, the following are best practices for designing an SSS programme.

- Focus on specifications for system level performance (as opposed to component performance) wherever possible.
- Keep the required element list as short as possible for simplicity and clarity while still providing key information to the target buyers for the SSS programme.

IECNORM.COM : Click to view the full PDF of IEC TS 62257-9-5:2016 RLV
Withdrawn

- Reach out to the people who use SSS to make decisions and ask their opinion on them.
- Use graphics to convey key points.

10.2.3 Framework for SSS guidelines document

10.2.3.1 General

The key elements of a guidelines document for an SSS programme are:

- qualification requirements, that is, the quality standards that shall be met to use the SSS;
- test result requirements, including the type of testing required and requirements for updating the results in the SSS;
- style and format requirements to ensure easy comparison of information across SSS;
- reporting precision that guides the level of rounding that is allowed from measured test results;
- results verification mechanisms to reduce the incidence of counterfeit SSS;
- required elements that shall be in every SSS;
- optional elements that may be included at the discretion of the manufacturer or their proxy;
- an example of the style, format, and contents in a fully implemented SSS.

An example framework document is included in Annex C.

10.2.3.2 Qualification standards

This defines if there are qualification criteria for participating in the SSS programme and generally references a product specification (see Clause 5).

10.2.3.3 Test result requirements

10.2.3.3.1 General

Details on the test result requirements for information presented in the SSS. The details should be specific about the requirements both when SSS are originally made and when they are updated.

10.2.3.3.2 Original testing

Typically, QTM test results are used as the basis for the original SSS of a particular product. In some cases the results may come from other sources. It is important to specify how long results are valid before retesting is required.

10.2.3.3.3 Retesting and updates

This section of the document describes the test requirements for several situations:

- full retesting after the original results have expired;
- partial retesting when the product is updated and the tolerance for changes in the specification that triggers retesting;
- partial retesting when a market check indicates there are discrepancies between the SSS and products available in the market.

10.2.3.4 Style and format

The style and format of SSS is generally uniform across all the SSS in a particular programme to make them useful for buyers or other stakeholders who rely on them as an information resource.

IECNORM.COM : Click to view the full PDF of IEC TS 62257-9-5:2016 RLV
Withdrawn

Style and formatting guidelines should generally specify the following:

- character font and size;
- use of colour;
- general guidelines for language and style.

The style and format guidelines are typically supplemented by an example SSS.

10.2.3.5 Reporting precision

Reporting precision guidelines describe the process to round quantitative test results so the information in each element of the SSS reflects the degree of significance for test results and is easy to read. For example, an average measurement of 52,3 lm across several samples might be rounded to 50 lm for placement on the SSS.

The guidelines should define three rounding rules for each SSS element that is covered.

a) Maximum precision of reporting: the highest number of significant figures allowed in the display on the SSS.

b) Minimum precision of reporting: the fewest number of significant figures allowed in the display on the SSS.

c) Maximum adjustment before additional rounding: if an element is going to be displayed with fewer significant figures than specified in 10.2.3.5 b), the maximum percentage a measured value may be adjusted up or down before additional rounding. Typically, this is a very low number (e.g. 5 %).

d) Allowable direction for additional rounding: if an element is going to be displayed with fewer significant figures than specified in 10.2.3.5 b), this specifies the allowable direction for additional rounding. Often this is the direction towards "worse" performance or quality.

Table 21 lists several elements that might be included in a SSS and provides recommended rounding rules for each. A similar table should be included in SSS guidelines documents.

Table 21 – Recommended precision requirements for metrics on a continuous scale

Metric	Maximum precision of reporting	Minimum precision of reporting	Maximum adjustment before rounding	Allowable direction for additional rounding	Example(s)
Run time	2 s.f.	1 s.f.	5 %	Down	4,33 h → 4,3 h or 4 h 36,6 h → 37 h or 30 h
Light output (lm)	2 s.f.	1 s.f.	5 %	Down	19,2 lm → 19 lm or 20 lm
Colour rendering (CRI) (R_a)	2 s.f.	2 s.f.	n/a	n/a	83,2 → 83
Colour temperature (CCT) (K)	2 s.f.	2 s.f.	n/a	n/a	4 678 K → 4 700 K
Light distribution (FWHM)	2 s.f.	2 s.f.	n/a	n/a	87°→ 87° 178°→ 180°
Battery capacity (mAh)	2 s.f.	2 s.f.	n/a	n/a	1 432 mAh → 1 400 mAh or 1 000 mAh
Other information	2 s.f.	1 s.f.	5 %	Varies	n/a
Key s.f. significant figures					

10.2.3.6 Results verification

Describe any features of the SSS that will facilitate verification of the contents. This may be via an online check, holograms, or any other security feature.

IECNORM.COM : Click to view the full PDF of IEC TS 62257-9-5:2016 RLV
Withdrawn

10.2.3.7 Section descriptions

Each section in the SSS should include a heading name and list the required and optional elements in the section. Each element should include a description of which aspects from the test results are referred to and a note on how to format the information. If graphics are used, a general format should be defined.

10.2.3.8 Example sheet

An illustrative example standardized specification sheet is provided below (Figure 8 and Figure 9).

Withdrawn
IECNORM.COM : Click to view the full PDF of IEC TS 62257-9-5:2016 RLV

Sunshine Lamp

Sunshine Solar

Results based on test procedures detailed in IEC 62257-9-5, ed. 3.0

Verify Online: www.lightingglobal.org/specs/sunshine-lamp

Valid Until: July 2014

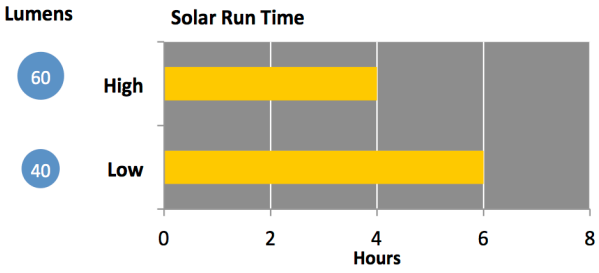

Meets Lighting Global Minimum Quality Standards

Mobile Charging

1 **Light Point**

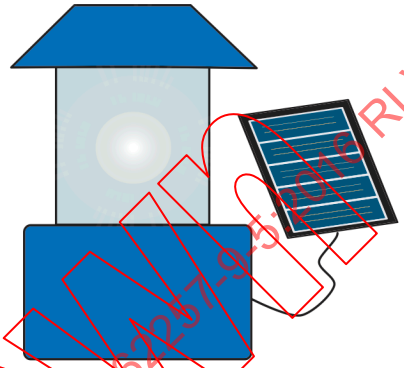

Warranty Information

All parts are protected from manufacturing defects or failure under normal use for a period of one year. The solar module is protected from defects and failure under normal use for two years.

Performance Details

	Brightness Setting***	
Performance Measure	**High**	**Low**
Full battery run time* (hours)	8	12
Run time per day of solar charging* (hours)	4	6
Total light output (lumens)	60	40
Total area with illumination > 25 lux** (m^2)	0,40	0,25
Total lighting service (lumen-hours / solar-day)	240	240

* Run time estimates do not account for mobile phone charging or other auxiliary loads; the run time is defined as the time until the output is 70 % of the initial, stabilized output.

** Total area with illumination > 25 lux is determined by the maximum area with adequate illumination at a 0,75 m distance and at the distance from which the product would normally provide task lighting service.

*** Additional brightness settings (not tested): Medium, Bed-light

Lighting Details

Lamp type	LED
Description of light points	Single column containing 15 LEDs
Colour characteristics	CRI 85 CCT "Cool" (5 000 K to 7 000 K)
Distribution type	Omnidirectional
Lumen maintenance	95 % of the original output remains after 2 000 h run time

IEC

Figure 8 – First portion of example SSS

IECNORM.COM : Click to view the full PDF of IEC TS 62257-9-5:2016 RLV
Withdrawn

Special Features	
Mobile charging	Includes 5 mobile phone adaptor "tips" to charge mobile phone from battery
Housing materials	ABS body

Durability	
Overall durability and workmanship	Pass
Durability tests passed	Drop test, switch and connector cycling, strain relief test, physical ingress protection test, and protection from frequent rain

Solar Details	
PV module type	Polycrystalline silicon
PV maximum power point	2 W

Battery Details	
Battery replaceability	Easily replaceable with common tools
Battery chemistry	Lithium iron phosphate
Battery package type	2x 18650 package
Battery capacity	2 000 mAh
Battery nominal voltage	3,2 V
Appropriate battery protection circuit	Pass

Marks and Certifications	
Factory certification	ISO 9001:2008
Safety certification	UL
Other certification	CE

Product Details	
Manufacturer name	Sunshine Solar
Product name	Sunshine Lamp
Product model / ID number	sl-001
Contact information	sunny-info@sunshine.com
Website	www.sunshine.com/sunshine-lamp

SSS Information	
Specs sheet expiration date	July 2014
Minimum Quality Standards Framework Version	2013
Revision	2013.07a

IEC

Figure 9 – Last (second) portion of example SSS

IECNORM.COM : Click to view the full PDF of IEC TS 62257-9-5:2016 RLV
Withdrawn

Annex A
(informative)

Recommended quality standards for off-grid lighting market support programme qualification

A.1 Overview

The example quality standards and warranty requirements given in Annex A are appropriate for qualification for market support programmes that support energy access for broad sets of end users with low to middle incomes who are off-grid in the developing world.

The target end users are typically cash-poor and will be expected to purchase qualifying products outright, under financing terms or through pay-as-you-go (PAYG) mechanisms.

Annex A is a bi-level qualification document. Meeting only the quality standards and warranty requirements provides access to basic programme services and incentives.

The aim of these quality standards is to protect end users from early failure and ensure that advertised information is valid. The warranty requirements provide a baseline of support.

NOTE Annex A is meant to be an informative example, with a structure and set of standards and performance criteria based on experience in a particular context. It is expected that programmes that reference this part of IEC 62257 will tailor a product specification to meet their needs.

A.2 Test requirements

Initial qualification under these standards requires QTM test results (Clause 6). On-going qualification is subject to successful market checks according to the market check method (Clause 7). Renewal testing equivalent to a primary market check test, is required after two years.

A.3 Product category requirements

Annex A applies to fixed separate (indoor), portable separate, portable integrated and fixed integrated (outdoor) products. It is generally applicable only to products with a free on board (FOB) wholesale price of USD 100 or lower.

Qualification as a "separate" PV module requires meeting the criteria listed in Table A.1.

Table A.1 – Qualification as separate PV module

Criterion	Aspect(s)	Required value
PV module cable length	4.2.6.2 Cable length	≥ 3 m to qualify as a "separate" PV module with 10 % tolerance

A.4 Quality standards

The product shall meet each of the criteria listed in Table A.2 and Table A.3 to meet the quality standards.

IECNORM.COM : Click to view the full PDF of IEC TS 62257-9-5:2016 RLV
Withdrawn

Table A.2 – Truth-in-advertising tolerance

Truth-in-advertising criterion	Aspect(s) considered in assessment	Requirement
System performance tolerance – numeric ratings	4.2.8 Performance aspects 4.2.9 Light output aspects Others, if applicable	≤ 15 % deviation from ratings (always ok if actual performance is better than advertised).
System components tolerance – numeric ratings	4.2.6 Solar module aspects 4.2.5 Battery performance aspects Others, if applicable	≤ 15 % deviation from ratings (always ok if actual performance is better than advertised).
Other numeric ratings tolerance	Multiple	≤ 15 % deviation from ratings (always ok if actual performance is better than advertised).
Overall truth-in-advertising statement	Multiple	Any description of the product that appears on the packaging, inside the package, and in any other media should be truthful and accurate. No statements should mislead buyers or end users about the features or utility of the product.

Table A.3 – Safety and durability standards *(1 of 2)*

Safety or durability criterion	Aspect(s) considered in assessment	Product category	Requirement
Overall water exposure protection	4.2.3.1 Water protection – enclosure 4.2.3.2 Water protection – circuit protection and drainage 4.2.3.3 Water protection – overall 4.2.11.1 Product and manufacturer information 4.2.2.7 Packaging and user's manual information	Fixed separate (indoor)	No protection required.
		Portable separate	Protection from occasional exposure to rain.
		Portable integrated	Protection from frequent exposure to rain.
		Fixed integrated (outdoor)	Protection from permanent outdoor exposure.
		External PV modules	Modified IPx4 or circuit protection
Physical ingress protection	4.2.3.5 Physical ingress protection 4.2.3.6 Physical ingress protection – solar module	All except below	Minimum of IP2x protection.
		Fixed integrated (outdoor)	Minimum of IP5x protection
		External PV modules	Minimum of IP3x protection
Mechanical durability – drop test	4.2.3.7 Drop resistance	Fixed separate (indoor) and fixed integrated (outdoor)	None result in safety hazards. There is no requirement that the lighting kits are still functional after a drop.
		Portable separate	Maximum failure rate for functionality is 1/6; none result in safety hazards.
		Portable integrated	Maximum failure rate for functionality is 1/6; none result in safety hazards.
Mechanical durability – goosenecks and moving parts	4.2.3.8 Gooseneck and moving part durability	Any with gooseneck or moving parts	Maximum failure rate for functionality is 1/6; none result in safety hazards.

IECNORM.COM : Click to view the full PDF of IEC TS 62257-9-5:2016 RLV
Withdrawn

Table A.3 *(2 of 2)*

Safety or durability criterion	Aspect(s) considered in assessment	Product category	Requirement
Mechanical durability – connectors	4.2.3.9 Connector durability	All products	Maximum failure rate for functionality is 1/6; none result in safety hazards.
Mechanical durability – switches	4.2.3.10 Switch durability	All products	Maximum failure rate for functionality is 1/6; none result in safety hazards.
Mechanical durability – strain relief	4.2.3.11 Strain relief durability	All products	Maximum failure rate for functionality is 1/6; none result in safety hazards.
Workmanship	4.2.3.12 Wiring quality	All products	Maximum prevalence of bad solder joints is 1/6 samples, maximum prevalence of poor wiring is 1/6 samples; maximum prevalence of overall workmanship failure is 1/6
Battery durability	4.2.3.13 Battery protection strategy 4.2.5.3 Battery storage durability 4.2.11.1 Product and manufacturer information 4.2.11.3 Third-party marks and certifications	All products	An appropriate battery protection strategy is used that will protect batteries from early failure and end users from harm. Lithium batteries shall additionally carry UN 38.3 certification and be protected with a cell balancing circuit. The battery capacity loss from storage is less than 25 % for the average sample. No more than 1/6 samples measures less than 35 %.
Lumen maintenance	4.2.4.2 2 000 h lumen maintenance	All products	L_{85} time is greater than 2 000 h for the average sample. No more than 1/6 samples fails (defined as being more than 10 % below L_{85} at 2 000 h). OR L_{95} time is greater than 1 000 h for all 6/6 samples.
Fluorescent light durability	4.2.4.3 Fluorescent light durability	Products with fluorescent lights	Maximum failure rate for functionality is 1/6.
AC-DC charger safety	4.2.2 Product design, manufacture, and marketing aspects 4.2.11.3 Third-party marks and certifications	Products that include an AC-DC grid charger	Any included AC-DC charger carries approval from a recognized consumer electronics safety regulator, such as UL or similar.
Hazardous Substances Ban	4.2.2.4 Energy storage system information 4.2.2.6 Battery general aspects 4.2.11.1 Product and manufacturer information	All products	No battery is permitted to contain cadmium or mercury at levels greater than trace amounts.

A.5 Warranty and end user support requirements

The product shall meet each of the criteria listed in Table A.4 to meet the warranty requirements.

IECNORM.COM : Click to view the full PDF of IEC TS 62257-9-5:2016 RLV
Withdrawn

Table A.4 – End user support requirements

Support type	Aspect(s)	Requirement
Information on product design, utilization, and care	4.2.2.7 Packaging and user's manual information	For products that include charging ports, user manual shall present instructions for installation, use and troubleshooting of the system. Installation instructions shall include appropriate placement and installation of the PV module. A description of the method or pathway for replacing components, including the battery, as well as specifications of components that could require replacement (fuses, batteries, PV) shall be included. Installation and operation instructions should be presented using language and graphics that can be understood by the typical consumer.
Maintenance and warranty terms	4.2.2.8 Warranty information 4.2.11.2 Warranty coverage	End users are provided at least one year of warranty coverage from the point of purchase; it should cover manufacturing defects that impede operation under normal use and protection from early component failure, including coverage on the battery.

Withdrawn
IECNORM.COM : Click to view the full PDF of IEC TS 62257-9-5:2016 RLV

Annex B
(informative)

Reserved

Annex B is reserved as a placeholder.

Withdrawn
IECNORM.COM : Click to view the full PDF of IEC TS 62257-9-5:2016 RLV

Annex C
(informative)

Recommended SSS guidelines

C.1 General

These guidelines apply to creating SSS for market support programmes. The goal of the SSS is to provide clear, verifiable, and accurate information on quality and performance to potential buyers, with a focus on distributors and bulk purchasing agents.

C.2 Qualification standards

To qualify for the SSS programme, a product shall meet the quality standards and warranty requirements listed in Annex A.

C.3 Test result requirements

C.3.1 Original testing

QTM test results, obtained in accordance with Clause 6, are required for initial SSS qualification and creation.

C.3.2 Retesting and updates

Table C.1 lists the requirements for retesting to update SSS.

Table C.1 – Requirements for retesting to update SSS

Trigger for testing	Scope of testing	Test requirements	Remarks
Two years since previous QTM or MCM testing	Any element on SSS	QTM (Clause 6) MCM (Clause 7)	--
Product update with changes of less than ±10 % in performance aspects	None required	Self-declaration allowed	Performance aspects include light output and performance aspects.
Product update with changes of more than ±10 % in performance aspects	Elements that are different	Aspects related to element that is changing tested according to MCM (Clause 7) using randomly procured samples	--
Product update with changes in quality or durability aspects	Elements that are updated	Aspects related to element that is changing tested according to MCM (Clause 7) using randomly procured samples	Quality aspects include water protection, lumen maintenance, drop test, etc.
Product update with new, non-lighting features	Elements that are new	Aspects related to element that is changing tested according to MCM (Clause 7) using manufacturer-provided samples	--
A programme-initiated market check test (in accordance with MCM (Clause 7) indicates an improvement in quality or performance)	None required	Accept new results	--

IECNORM.COM : Click to view the full PDF of IEC TS 62257-9-5:2016 RLV
Withdrawn

Trigger for testing	Scope of testing	Test requirements	Remarks
A programme-initiated market check test (in accordance with MCM (Clause 7) indicates a **decline** in quality or performance)	Any element that is shown to decline	Aspects related to element that is changing tested according to MCM (Clause 7) using randomly procured samples	This essentially means that there is a chance to prove that programme-initiated market check results were an anomaly in cases where they indicate a reduction in quality or performance.

C.4 Style and format

Following are the style guidelines for SSS.

a) Dominant colours: black and white.

b) Secondary colours should be consistent and harmonized (e.g. on graphs); the base colour may be from the product packaging or corporate branding from the product marketer.

c) Product images: colour image on a white background.

d) Font: Helvetica; 12 pt for most text, 16 pt for product name on headline, 10 pt for notes and graphics.

e) Language: English (optional to create translations in other languages).

f) Style: write in a way that is clear and understandable by a broad set of potential readers.

C.5 Reporting precision

The qualitative parts of the specification sheet (warranty, manufacturer name, lighting type, etc.) should always be accurate and updated.

Quantitative parts of the specification sheet that are reported on a continuous scale may be rounded for ease of interpretation. The rounded specification shall be reported so that it meets the precision guidelines presented in Table C.2. The guidelines are in terms of significant figures of reporting (s.f.). If one is rounding to the maximum precision, the rounding should be according to standard conventions ($\geq 0{,}5$ rounds to 1; $< 0{,}5$ rounds to 0). Alternatively, if the minimum precision requirements are lower than the maximum, one may round further (to fewer significant figures than the maximum) but any further rounding shall be in the "allowable direction" as defined in the table, starting from the original measured value plus or minus the percentage adjustment that is allowed before additional rounding (i.e. the standard rounding convention does not apply in that case).

IECNORM.COM : Click to view the full PDF of IEC TS 62257-9-5:2016 RLV
Withdrawn

Table C.2 – Recommended precision requirements for metrics on a continuous scale

Metric	Maximum precision of reporting	Minimum precision of reporting	Maximum adjustment before rounding	Allowable direction for additional rounding	Example(s)
Run time (h)	2 s.f.	1 s.f.	5 %	Down	4,33 h → 4,3 h or 4 h 36,6 h → 37 h or 30 h
Light output (lm)	2 s.f.	1 s.f.	5 %	Down	19,2 lm → 19 lm or 20 lm
Colour rendering (CRI) (R_a)	2 s.f.	2 s.f.	n/a	n/a	83,2 → 83
Colour temperature (CCT) (K)	2 s.f.	2 s.f.	n/a	n/a	4 678 K → 4 700 K
Light distribution (FWHM)	2 s.f.	2 s.f.	n/a	n/a	87° → 87° 178° → 180°
Battery capacity (mAh)	2 s.f.	2 s.f.	n/a	n/a	1 432 mAh → 1 400 mAh or 1 000 mAh
Other information	2 s.f.	1 s.f.	5 %	Varies	n/a
Key s.f. significant figures					

C.6 Results verification

Each SSS includes a unique internet URL that is directed towards a web page. If one goes to the web page, it is possible to download a verified copy of the SSS to ensure the veracity and validity of SSS.

C.7 Section descriptions

C.7.1 General

Subclauses C.7.2 through C.7.11 should be included in the SSS. Each section should begin with a grey bar with the section name in bold, black type. The elements in each section should be black type on a white background with thin grey lines separating the elements.

C.7.2 Header/overall performance

C.7.2.1 General

This SSS section includes the name of the product in the header area and a link to verify the SSS. The header elements are white text on a black background.

Below that is a description of the overall performance – brightness and run time – for up to two settings. For each of the settings listed, the lumen output and hours of run time should be described using plain language phrasing. The run time should be "on a full battery charge" for AC charged or central charging model products, "after one day of solar charging" for solar-charged products and "after XX minutes/hours of cranking" for electromechanically-charged products.

Next to the key performance indicator description is a "thumbnail" image of the product, only including items that are included in the package.

In this SSS section, only the content is displayed (the element names are not indicated). Table C.3 lists all of the elements that should be included in the header area.

IECNORM.COM : Click to view the full PDF of IEC TS 62257-9-5:2016 RLV
Withdrawn

Table C.3 – Elements in the header/overall performance SSS section

Element	Display type	Optional or required	Aspect(s) involved/ origin of information	Remarks
Product name	Text	Required	4.2.11.1 Product and manufacturer information	The product name should be "complete" enough to differentiate it from other similar products in the same manufacturing line. EXAMPLE Sunshine Lamp
Verification link	Text	Required	Generated by SSS programme website developer	This unique link should point to a webpage where the original, up-to-date SSS is available for verification. EXAMPLE www.example.org/sss/sunshine-lamp
Expiration date	Text	Required	From QTM report	Indicate a date two years after the completion of the QTM test report that is the foundation for the SSS.
Results summary statement	Text	Required	4.2.8 Performance aspects 4.2.8.3 Solar-day lighting run time 4.2.9.1 Average luminous flux output	This is the text that describes the run time and light output from the product, synthesized as a single lighting service number. See details on calculation in C.7.4. EXAMPLE 240 lumen-hours per day of solar charging.
Thumbnail image	Image	Required	Provided directly by manufacturer or from 4.2.2.11 Other visual screening results.	The image should show the product against a white background.
Graphical summary	Graphic	Required	4.2.8 Performance aspects 4.2.9.1 Average luminous flux output 4.2.9.3 Average light distribution characteristics	This is a graphical summary of the run time and brightness as described in the Results summary statement. It also includes an iconographic summary of features and quality standards

C.7.2.2 Graphical summary instructions

The graphical summary should include two elements.

- Graph(s) showing the run time and light output (or light distribution characteristic area) for each of the settings that are detailed in other sections.
- Icons indicating successful passing or presence of the following features:
  - overall workmanship pass;
  - number of ports and port types;
  - mobile charging feature;
  - number of light points;
  - meeting quality standard for a particular program;
  - optional pay-as-you-go (PAYG) feature.

C.7.3 General information

Table C.4 lists the elements in the general information SSS section.

IECNORM.COM : Click to view the full PDF of IEC TS 62257-9-5:2016 RLV
Withdrawn

Table C.4 – Elements in the general information SSS section

Element	Display type	Optional or required	Aspect(s) involved/ origin of information	Remarks
Manufacturer	Text	Required	4.2.11.1 Product and manufacturer information	The name of the manufacturer or "official" marketing firm for the product. EXAMPLE Sirius Lighting Corporation
Product name	Text	Required	4.2.11.1 Product and manufacturer information	The product name should be "complete" enough to differentiate it from other similar products in the same manufacturing line. EXAMPLE Sunshine Lamp
Model number	Text	Required	4.2.11.1 Product and manufacturer information	Often more detailed than the product name; may include version number.
Contact	Text	Required	4.2.11.1 Product and manufacturer information	An email or phone contact at the manufacturer
Website	Text	Optional	4.2.11.1 Product and manufacturer information	A URL for the manufacturer web page.
Warranty	Text	Required	4.2.2.8 Warranty information 4.2.11.2 Warranty coverage	A short (≤ 200 characters) description of the warranty coverage that highlights the duration of coverage; this should match with the detailed information provided to consumers and documented in 4.2.2.8 Warranty information.

C.7.4 Performance details

Table C.5 lists the elements in the performance details SSS section.

Table C.5 – Elements in the performance details section

Element	Display type	Optional or required	Aspect(s) involved/ origin of information	Remarks
Lighting full-battery run time	Text	Required	4.2.8.5 Lighting full-battery run time	Specify a full-battery run time for each setting included in any other part of the SSS. The graphics include a stacked horizontal bar graph that indicates run time at various settings with the same axis as other run time graphs.
Run time per day of solar charging	Text	Required for solar products	4.2.8.3 Solar-day lighting run time	Specify a solar run time for each setting included in any other part of the SSS. The graphics include a stacked horizontal bar graph that indicates run time at various settings with the same axis as other run time graphs.
Run time after cranking for five minutes	Text	Required for electromechanically-charged products	4.2.8.7 Electromechanical charge ratio 4.2.8.5 Lighting full-battery run time	Specify an electromechanical run time for each setting included in any other part of the SSS.
Light output	Text	Required	4.2.9.1 Average luminous flux output	Include for each setting
Task surface brightness	Text	Optional	4.2.9.3 Average light distribution characteristics	Include for each setting

IECNORM.COM : Click to view the full PDF of IEC TS 62257-9-5:2016 RLV

Element	Display type	Optional or required	Aspect(s) involved/ origin of information	Remarks
Total lighting service	Text	Required	Synthesis of other elements in performance details	For solar products, equals the product of solar-day lighting run time and light output. For other products, equals the product of lighting full-battery run time and light output. The units are lumen-hours/solar day or lumen-hours/full-charge.

C.7.5 Light output

Table C.6 lists the elements in the light output SSS section.

Table C.6 – Elements in the light output SSS section

Element	Display type	Optional or required	Aspect(s) involved/ origin of information	Remarks
Lamp type	Text	Required	4.2.2.3 Lighting system information	Include number and type of light sources.
Colour characteristics	Text	Required	4.2.9.4 Colour characteristics	Include for highest setting; use "slider" graphics to display
Distribution category	Text	Required	4.2.9.2 Full width half maximum (FWHM) angles	Place in category based on FWHM angle: Narrow (< 15°), Wide (15° to 270°), Omni (> 270°)
Lumen maintenance	Text	Required	4.2.4.2 2 000 h lumen maintenance	Indicate fraction of original light output remaining at 2 000 h of operation.

C.7.6 Special features

Table C.7 lists the elements in the special features SSS section.

Table C.7 – Elements in the special features SSS section

Element	Display type	Optional or required	Aspect(s) involved/ origin of information	Remarks
Mobile charging	Text	Optional	4.2.2.9 Auxiliary outlets, ports and adapters information	Specify if a mobile charging feature is available
Other features	Text	Optional	4.2.2.9 Auxiliary outlets, ports and adapters information	Specify other features, such as housing material.

C.7.7 Durability

Table C.8 lists the elements in the durability SSS section.

IECNORM.COM : Click to view the full PDF of IEC TS 62257-9-5:2016 RLV
Withdrawn

Table C.8 – Elements in the durability SSS section

Element	Display type	Optional or required	Aspect(s) involved/ origin of information	Remarks
Overall durability and workmanship	Text	Required	Multiple	Indicate pass with graphic indicator (all products shall pass this requirement to use the SSS).
Water protection	Text	Required	Water exposure protection as defined in Annex U: physical and water ingress protection test or Annex V: Level of water protection	Specify the overall level of water protection and the elements of the product that contribute to the level of protection (enclosure, product design, user information).
Physical ingress protection	Text	Required	4.2.3.5 Physical ingress protection	Indicate pass or fail.
Drop test	Text	Required	4.2.3.7 Drop resistance	Indicate pass or fail for damage, functionality, and safety.
Switches, connectors, strain relief, and goosenecks/moving parts	Text	Required	4.2.3.8 Gooseneck and moving part durability 4.2.3.9 Connector durability 4.2.3.10 Switch durability 4.2.3.11 Strain relief durability	Indicate pass or fail for damage, functionality, and safety.

C.7.8 Solar module details

Table C.9 lists the elements in the solar module details SSS section.

Table C.9 – Elements in the solar module details SSS section

Element	Display type	Optional or required	Aspect(s) involved/ origin of information	Remarks
PV module type	Text	Optional	4.2.2.2 Charging system information	Indicate PV chemistry (e.g. mono-Si).
PV maximum power	Text	Optional	4.2.6.1 Solar I-V curve parameters	Specify the PV power at standard test conditions (STC).

C.7.9 Battery details

Table C.10 lists the elements in the battery details SSS section.

IECNORM.COM : Click to view the full PDF of IEC TS 62257-9-5:2016 RLV
Withdrawn

Table C.10 – Elements in the battery details SSS section

Element	Display type	Optional or required	Aspect(s) involved/ origin of information	Remarks
Battery replaceability	Text	Required	4.2.2.5 Battery easy replaceability	Either "easily replaceable" or "requires specialized technician".
Battery chemistry	Text	Required	4.2.2.4 Energy storage system information	Indicate chemistry.
Battery package type	Text	Required if battery is easily replaceable, otherwise optional	4.2.2.6 Battery general aspects	Indicate the battery package type and/or size.
Battery capacity	Text	Required	4.2.5.1 Battery capacity	Indicate battery capacity from battery test (Annex K).
Battery nominal voltage	Text	Required if battery is easily replaceable, otherwise optional	4.2.2.6 Battery general aspects 4.2.5.4 Battery nominal voltage	Indicate the nominal voltage.
Appropriate battery protection strategy	Text	Optional	4.2.3.13 Battery protection strategy	Indicate "pass" if battery protection is appropriate (this is required to use SSS).

C.7.10 Marks and certifications

Table C.11 lists the elements in the marks and certifications SSS section.

Table C.11 – Elements in the marks and certifications SSS section

Element	Display type	Optional or required	Aspect(s) involved/ origin of information	Remarks
Factory certification	Text	Optional	4.2.11.3 Third-party marks and certifications	For example ISO 9001.
LED / CFL certification	Text	Optional	4.2.11.3 Third-party marks and certifications	For example UV-free LEDs.
Safety certification	Text	Optional	4.2.11.3 Third-party marks and certifications	For example UL.
Durability certification	Text	Optional	4.2.11.3 Third-party marks and certifications	For example UV-resistant plastics used.
Other certifications	Text	Optional	4.2.11.3 Third-party marks and certifications	Allowed if they pertain to the particular product and are relevant (e.g. CE, RoHS).

C.7.11 SSS information

Table C.12 lists the elements in the SSS information section.

IECNORM.COM : Click to view the full PDF of IEC TS 62257-9-5:2016 RLV
Withdrawn

Table C.12 – Elements in the SSS information section

Element	Display type	Optional or required	Aspect(s) involved/ origin of information	Remarks
Expiration date	Text	Required	From QTM report	Indicate a date two years after the completion of the QTM test report that is the foundation for the SSS.
Revision	Text	Required	n/a	Indicate an internal SSS revision tracking number.

C.8 Example sheet

An example standardized specification sheet is provided in Figure 8 and Figure 9.

Withdrawn
IECNORM.COM : Click to view the full PDF of IEC TS 62257-9-5:2016 RLV

Annex D
(normative)

Manufacturer self-reported information

D.1 Background

Having proper manufacturer information is important for communication throughout the testing process as well as for understanding key product information and any certifications possessed by the manufacturer's lab or product. To this end, there are three categories of self-reported information: manufacturer information, product information, and manufacturer self-certification regarding either the manufacturing lab or product.

D.2 Outcomes

The manufacturer self-reported information outcomes are listed in Table D.1.

Table D.1 – Manufacturer self-reported information outcomes

Metric	Reporting units	Related aspects	Notes
Manufacturer information	Varied	4.2.11.1 Product and manufacturer information	Record all provided manufacturer information
Product information	Varied	4.2.11.1 Product and manufacturer information	Record all provided product information
Self-certification information	Varied	4.2.11.3 Third-party marks and certifications	Record all manufacturer or product certifications

D.3 Solicited information

D.3.1 General

At a minimum, the information contained in D.3.2 and D.3.3 should be solicited from the manufacturer.

D.3.2 Confidential information (not released publicly)

D.3.2.1 Manufacturer information

The following confidential manufacturer information should be solicited:

a) manufacturer company name;
b) contact person name;
c) contact person position at company (i.e. job title);
d) manufacturer company physical address;
e) contact telephone number(s);
f) contact fax number;
g) contact e-mail address.

If separate people manage contracting issues and technical testing questions, request contact information for both parties.

IECNORM.COM : Click to view the full PDF of IEC TS 62257-9-5:2016

D.3.2.2 Product information

The following confidential product information should be solicited:

a) markets in which the product is for sale (e.g., Kenya, India, China);
b) free on board (FOB) product price for at least 1 000 units ($);
c) typical product shipping point of origin;
d) product driver type (e.g., resistor, pulse-width modulation);
e) battery protection methods (i.e., deep discharge protection and/or overcharge protection);
f) list of battery charge control methods;
g) description of deep discharge charge control, including the low voltage disconnect threshold;
h) description of overcharge protection charge control, including the overcharge protection disconnect voltage;
i) battery information sheet from battery manufacturer, preferably showing acceptable deep discharge protection and overcharge protection cutoffs at a minimum;
j) whether the battery contains internal protection circuitry;
k) description of special testing considerations, such as any characteristics that would impede the testing process. Characteristics include: an auto-off function that turns the light off after a specific number of hours of operation, the product disables if the enclosure is opened; the product connects to a wireless network; the product is tamperproof;
l) expected/rated performance, including:
    1) name, light output, full battery run time, and solar run time for each setting;
    2) brightness setting specifications, if publicly advertised or provided to the laboratory by the manufacturer;
    3) rated performance of any auxiliary appliances included with the product.
m) the names of the settings the manufacturer would wish to be tested.

D.3.3 Public information (may be released publicly)

D.3.3.1 Manufacturer information

The following public manufacturer information should be solicited:

a) official customer facing/brand name;
b) manufacturer company physical address;
c) contact person name;
d) contact person position at company (i.e. job title);
e) contact telephone number;
f) contact fax number;
g) contact e-mail address;
h) manufacturer company website.

D.3.3.2 Product information

The following public product information should be solicited:

a) product name;
b) product model number;
c) all product lighting technologies used (e.g. fluorescent tube, LED). If the product uses LEDs, are the LEDs high-power or low-power?

IECNORM.COM : Click to view the full PDF of IEC TS 62257-9-5:2016 RLV
Withdrawn

d) battery chemistry (SLA, NiMH, etc.);
e) battery package type;
f) battery nominal voltage (V);
g) battery capacity (mAh);
h) charge/discharge rate at which the battery capacity is specified;
i) all product charging system types (e.g. solar module, AC power, dynamo):
   1) if the product has AC power charging, is an adapter included?
   2) if the product has solar charging, what active material is used in the PV module (e.g., mono-Si, poly-Si, CIS, etc.)?
j) all included product features (e.g. mobile phone charging, radio);
k) if the product has mobile phone charging, are adapters included?
l) all optional product features (e.g. mobile phone charging, radio);
m) description of product warranty terms, including duration;
n) confirmation of AC-DC charger approval from a recognized consumer electronics safety regulator, such as UL (if product includes an AC-DC charger);
o) high resolution product photograph on a white or transparent background.

D.3.3.3 Manufacturer certifications

These certifications should be accompanied with supporting documentation, such as copies of the original certifications, letters from an appropriate organization, or self-certification.

a) All manufacturer company certifications and markings (e.g. ISO 9000, UL, CE).
b) All product certifications and markings (e.g. UV-resistant plastic, UV-free LEDs, high-temperature batteries).
c) All component-level certifications and markings (e.g. IEC 62133 for battery safety).

D.4 Reporting

Report the following in the product manufacturer self-reported information report.

- Metadata:
  – report name;
  – product manufacturer;
  – product name;
  – product model number;
  – name of test laboratory;
  – approving person;
  – date of report approval.
- Confidential information:
  – manufacturer company name;
  – contact person name;
  – contact person position at company;
  – manufacturer company physical address;
  – contact telephone number;
  – contact fax number;
  – contact e-mail;
  – product markets;

IECNORM.COM : Click to view the full PDF of IEC TS 62257-9-5:2016 RLV
Withdrawn

  - product FOB price ($);
  - product shipping point of origin;
  - product driver type;
  - product charge control methods and descriptions;
  - battery information sheet from battery manufacturer;
  - statement whether battery contains internal protection circuitry;
  - description of special testing considerations;
  - expected/rated performance for each setting;
  - names of the settings the manufacturer would wish to be tested.
- Public information:
  - official customer facing/brand nam;
  - manufacturer company physical address;
  - contact person name;
  - contact person position at company;
  - contact telephone number;
  - contact fax number;
  - contact e-mail;
  - manufacturer company website;
  - product name;
  - product model number;
  - product lighting technologies;
  - product battery chemistry;
  - product battery package type;
  - product battery nominal voltage (V);
  - product battery capacity (mAh);
  - charge/discharge rate at which the battery capacity is specified;
  - product charging systems;
  - included product features;
  - optional product features;
  - description of product warranty terms;
  - confirmation of AC-DC charger approval;
  - high resolution product photograph on a white or transparent background;
  - manufacturer company certifications;
  - product certifications;
  - component certifications.

IECNORM.COM : Click to view the full PDF of IEC TS 62257-9-5:2016 RLV
Withdrawn

Annex E
(normative)

Product sampling

E.1 Background

Proper product sampling is the first step in the testing process, and it is critical to maintaining the test method's fairness and credibility.

E.2 Test outcomes

The product sampling outcomes are listed in Table E.1.

Table E.1 – Product sampling outcomes

Metric	Reporting units	Related aspects	Remarks
Sample type	Retail/warehouse	n/a	--
Sample procurement agency	Agency name	n/a	The third-party agency that procures the samples
Sample procurement agent	Name	n/a	The name of the person who procures the samples
Sample procurement date	Date	n/a	--
Sample procurement address(es)	Address(es)	n/a	--
Sample shipping date	Date	n/a	The date the samples are shipped to the test lab(s) from the third-party sampling agency
Test lab(s)	Test lab name(s)	n/a	--
Test lab address(es)	Address(es)	n/a	--
Sample delivery date(s)	Date(s)	n/a	The date the samples are received by the test lab(s)

E.3 Related tests

Testing is predicated upon the product samples already being procured, shipped, and received at the test lab(s).

E.4 Procedure

E.4.1 Retail sampling

E.4.1.1 General

For retail sampling, third-party agents will procure product samples from a variety of retail outlets in the market.

E.4.1.2 Equipment requirements

No equipment is required for retail sampling.

IECNORM.COM : Click to view the full PDF of IEC TS 62257-9-5:2016 RLV
Withdrawn

E.4.1.3 Test prerequisites

Samples shall be procured from a geographically-diverse set of retail outlets. Retail outlets include both vendors or retail shops where end users may directly purchase products, and local or regional distributors.

E.4.1.4 Apparatus

No apparatus is required for retail sampling.

E.4.1.5 Procedure

The following steps shall be followed.

a) The third party sampling agency identifies a specified number of retail outlets in the market from various geographic locations.

b) The sampling agency selects a subset of the retail outlets to procure samples from, ensuring that the subset of retail outlets is geographically diverse (e.g. each retail outlet is in a different city and/or country than the rest of the subset).

c) The sampling agency procures the product samples from the various retail outlets, ensuring that no more than 40 % of the overall number of procured samples comes from any single retail outlet.

d) The date, locations, sampling agent, and number of samples procured from each location should be documented by the sampling agency.

e) The sampling agency ships the products to one or more test labs and reports the shipment tracking number(s), when available.

f) Once received at the test lab(s), the date(s) of reception, test lab name(s), and test lab location(s) should be documented.

E.4.1.6 Calculations

There are no calculations for retail sampling.

E.4.2 Warehouse sampling

E.4.2.1 General

For warehouse sampling, third-party agents will procure samples from a warehouse, distributorship, factory, or other bulk storage location.

E.4.2.2 Equipment requirements

No equipment is required for warehouse sampling.

E.4.2.3 Test prerequisites

The sampling location should be the main bulk storage location in the region, and there shall be enough products available that the procured samples account for no more than 3,5 % of the total product stock. Furthermore, the sampling agent shall be able to sample from the bulk storage location's entire stock.

E.4.2.4 Apparatus

No apparatus is required for warehouse sampling.

E.4.2.5 Procedure

The following steps shall be followed.

IECNORM.COM : Click to view the full PDF of IEC TS 62257-9-5:2016 RLV
Withdrawn

a) At least 24 h before the sampling takes place, the sampling agency shall make contact (via email or telephone) with representatives at the sampling location to provide proper notice and ensure that the number of samples procured will not exceed 3,5 % of the sampling location's total product stock.

b) The sampling agency randomly procures the product samples from the entire bulk storage location's stock (i.e. the entire product stock shall be available to sample from).

c) The date, location, sampling agent, and number of samples procured should be documented by the sampling agency.

d) The sampling agency ships the products to one or more test labs and reports the shipment tracking number(s), when available.

e) Once received at the test lab(s), the date(s) of reception, test lab name(s), and test lab location(s) should be documented.

E.4.2.6 Calculations

There are no calculations for warehouse sampling.

E.5 Reporting

Report the following in the product sampling test report.

- Metadata:
  - report name;
  - procedure(s) used;
  - product manufacturer;
  - product name;
  - product model number;
  - name of test laboratory;
  - approving person;
  - date of report approval.
- Sampling instructions
- Sampling and shipping information:
  - name of sampling agency;
  - name(s) of sampling agent(s);
  - sampling location name(s), address(es), and description(s);
  - number of samples procured (at each location);
  - name of shipping agency;
  - shipment tracking number(s);
  - date samples are shipped to test lab(s);
  - date samples are received at test lab(s).

IECNORM.COM : Click to view the full PDF of IEC TS 62257-9-5:2016 RLV
Withdrawn

Annex F
(normative)

Visual screening

F.1 Background

The visual screening process covers DUT specifications, properties (such as external DUT measurements), functionality, observations, and internal/external construction quality.

The DUT's components, materials, and utilities are categorized and, in some cases, evaluated. The visual screening test provides a thorough qualitative and quantitative assessment of the DUT as received from the manufacturer and serves to uniquely identify a DUT. The DUT's operation out of the packaging is documented before any modifications are made for subsequent tests.

F.2 Test outcomes

The test outcomes of the visual screening process are listed in Table F.1.

Table F.1 – Visual screening test outcomes

Metric	Reporting units	Related aspects	Remarks
DUT specifications	Varied	4.2.2 Product design, manufacture, and marketing aspects	Record all provided specifications
DUT information	Varied	4.2.2 Product design, manufacture, and marketing aspects 4.2.11.1 Product and manufacturer information	Record dimensions and qualitative descriptors
Internal DUT inspection	Varied	4.2.3 Product durability and workmanship aspects	Describe/document wiring and electronics fixtures
Internal DUT inspection	Number of defects	4.2.3 Product durability and workmanship aspects	Record the number of soldering and/or electronics quality defects

F.3 Related tests

Annex F is not related to any of the other annexes.

F.4 Procedure

F.4.1 Properties, features, and information

F.4.1.1 General

Relevant DUT information, such as external DUT measurements and observations, are recorded to capture the DUT's characteristics. Sufficient comments should be provided to thoroughly describe the DUT's characteristics. This part of the procedure may be completed on a single sample.

IECNORM.COM : Click to view the full PDF of IEC TS 62257-9-5:2016 RLV
Withdrawn

F.4.1.2 Equipment requirements

The following equipment is required. Equipment shall meet the requirements in Table CC.2.

- Callipers and/or ruler.
- Balance (scale).
- Bright task light with good colour rendering.
- Camera.

F.4.1.3 Test prerequisites

The DUT should be new, unaltered, and in its original packaging. Read the DUT's box and documentation for instructions on using the DUT. Consult the manufacturer for missing information pertaining to the required observations.

F.4.1.4 Apparatus

The DUT may be positioned under a bright task light in the examination, if necessary.

F.4.1.5 Procedure

The following steps shall be followed. All photographs or scans of packaging, documents (e.g., user's manual and warranty card), and labels shall be of sufficient quality that all text is legible (unless illegible in the original document) and all diagrams, icons, and other images are clearly reproduced. All photographs of DUT components shall be of sufficient quality that all relevant text is legible (unless illegible on the item being photographed) and all relevant icons and images are clearly reproduced.

a) Provide the following.
   1) Note all available manufacturer contact information (e.g. name, address, phone number, email, website, etc.).
   2) Photograph or scan all sides of the DUT's retail box and describe the box's quality, if available.
   3) Note if a user's manual is included with the DUT. If so, report the type of manual it is (e.g booklet, sheet, etc.), report the language(s) in which it is written, and photograph or scan each page.
   4) If a warranty is available for the DUT, record the warranty duration, in months, describe the terms and conditions, and photograph or scan the warranty material. Note if there are separate warranty durations for the battery and included appliances.
   5) Photograph or scan any other documents included with the DUT.
   6) Note and describe any instructions for proper disposal of the battery and/or product.
   7) Note and describe any instructions for replacement of the battery.
   8) Note and describe any instructions for obtaining service or replacement parts in case of a problem with the product.
   9) Note and describe any labelling of hazards.
   10) Note and describe any instructions for ensuring the PV module is not shaded.
   11) Note and describe any instructions on how to connect the PV module to the product's main unit for charging.
   12) Note and describe any instructions on facing the PV module surface towards the sun.
   13) Note and describe any required pre-use instructions during installation (e.g. charging the battery fully, inserting a supplied fuse).
   14) Note and describe any instructions on how to make required permanent connections during installation.
   15) Note and describe any instructions on how to connect advertised appliances.

IECNORM.COM : Click to view the full PDF of IEC TS 62257-9-5:2016 RLV
Withdrawn

16) Note and describe any instructions on the battery's state of charge.

17) Note and describe any specifications for product components that could require replacement (e.g. fuses, lights, PV module, batteries).

18) Note and describe any instructions on keeping the PV module surface clean.

19) Note and describe any instructions to not ding the PV module from the backside.

20) Note and describe any instructions to not carry the PV module by its cable.

21) Note and describe any instructions on preventing the PV module from cracking during handling.

22) Note and describe any instructions to keep the product away from fire.

23) Note and describe any instructions on how to install the product securely.

24) Note and describe any instructions on the product's graphical display, if a display is included.

25) Note and describe any instructions to not drop the product.

26) Note and describe any instructions to not cut or heat the product's cables.

27) Note and describe any instructions to avoid keeping the battery at a low state of charge for long periods of time.

28) Note and describe any instructions on replacing product components that could require replacement (e.g. fuses, lights, PV, batteries).

29) Note and describe any instructions to fully charge the batteries before long-term storage of the product.

b) Measure the following (in the specified units) without disassembling the DUT.

1) Measure the DUT's mass, in grams (g), as it would typically be used in a lighting application (not including any external solar modules or mobile phone charging connectors) and indicate the specific components included in mass measurement.

2) Measure any included appliances' mass, in grams (g).

3) Measure and describe the length, in metres (m), of any cables connecting the control box to the batteries, the control box to the lamp units or the control box to any included appliances.

4) Measure the length, width, and height, in centimetres (cm), of the DUT, lamp unit(s) and any additional included appliances, components or interconnected parts, separately. Do not include dimensions of an external PV module or any mobile phone charging accessories.

c) Observe the following (consult the documentation for any explanations; see 4.1.3 for details on the terminology used in the following steps).

1) Note if any cables will be predominantly used outdoors. Note if certification documentation has been provided for these cables indicating they are suitable for outdoor use.

2) Note the DUT's total number of unique lighting units, indicate the technology used in each (LED, fluorescent, incandescent, etc.), and provide a description and photographs of each.

3) Note the number of light points in each lighting unit.

4) Note the number of arrays contained in each light point (e.g. a group of LEDs that function as a single unit is an array).

EXAMPLE If a lamp unit contains 10 LEDs, and 5 LEDs illuminate for one DUT setting, and all 10 LEDs illuminate for the DUT's only other setting, this lamp unit contains two arrays (5-LED and 10-LED).

5) Note the number of independent light sources (i.e. the total number of LEDs or other bulb types) in each array.

6) Determine the number of DUT light output settings. Use the setting descriptions provided by the DUT's literature. If no setting descriptions are provided, use appropriate descriptions (e.g. high, medium, low, 1 high-power LED, 3 low-power LEDs, etc.).

IECNORM.COM : Click to view the full PDF of IEC TS 62257-9-5:2016 RLV
Withdrawn

7) Describe and photograph the arrangement of lamp units, included appliances, battery(-ies), and energy source(s) in terms of housing/cases.

EXAMPLE There are two housings. In the main housing, there is a battery with a gooseneck lamp protruding from the housing. The other housing is a remote lamp unit with no battery; it is connected to the main housing with a 4 m cable that has an inline switch. The PV module is external and connects to the main housing with a cable.

8) Describe the materials that compose the DUT's lamp units, battery housing, charge controller housing, included appliances, and/or any other housings (e.g. plastic, metal, glass, or other).

9) Note if the DUT and included appliances have any indicators (e.g. charge indicators) and, if so, include descriptions of indication meanings and photographs of the indicators.

10) Note and photograph any other features present on or included with the DUT and included appliances (e.g. handles, mounting brackets, stands).

11) Note if the DUT has a radio or mobile phone charging capabilities. If so, photograph the connectors.

12) Describe and photograph any other included appliances, accessories or connectors not yet documented (excluding DC ports and connectors associated with the DUT's PV module).

13) If a grid charger is included, note if it carries any recognized safety marks, such as the CE mark. Be sure to photograph any labels provided on the grid charger.

14) Indicate if the DUT provides central (e.g. grid, central station) or independent (e.g. electromechanical, solar PV) charging and the specific charging means and describe the robustness of each included charging mechanism.

d) Provide the following information regarding the DUT's DC ports.

1) Number of distinct port types.

2) For each port type:

i) brief description of the port (e.g. "USB port 1");

ii) receptacle type (e.g. USB 2 type A, barrel jack, cigarette lighter jack);

iii) number of identical ports of this type;

iv) nominal port voltage, determined from any of the following sources:

– manufacturer-supplied information;

– user documentation and labelling;

– if the port is a standardized or conventional connector, the applicable standards and/or conventions;

– measurement of the open-circuit voltage and the voltage under load.

v) rated maximum port current, if any, determined from any of the following sources:

– measurement of the open-circuit voltage and the voltage under load;

– manufacturer-supplied information;

– user documentation and labelling;

– markings on any DUT components, such as a fuse or circuit breaker, if it can be determined that the component limits the current for the port.

vi) whether the port is intended or expected to be used for charging mobile phones (e.g. based on labelling, documentation, or provided adapters);

vii) photograph of the port.

e) Measure and observe the following (in the provided units) for the DUT's PV module.

1) Measure the PV module's overall length and width, in centimetres (cm), including the frame.

2) Measure the active solar material's overall area, in square centimetres (cm^2).

3) Note if the PV module is external or integrated into the DUT's housing.

IECNORM.COM : Click to view the full PDF of IEC TS 62257-9-5:2016 RLV

4) Measure the PV module's cable length, in metres (m), in the case of external PV modules.
5) Note the PV module's solar material (e.g. poly-Si, mono-Si, CIS, amorphous).
6) Note the PV module's encasing (e.g. lamination, glass, epoxy).
7) Describe the quality of workmanship in the PV module's junction box, if present.
8) Note any additional information about the PV module (e.g. number of individual cells).
9) Carefully inspect each PV module under an illumination of not less than 1 000 lux and note any of the following visual defect conditions:
   – cracked, bent, misaligned or torn external surfaces;
   – broken cells;
   – cracked cells;
   – faulty interconnections or joints;
   – cells touching one another or the frame;
   – failure of adhesive bonds;
   – bubbles or delaminations forming a continuous path between a cell and the edge of the module;
   – tacky surfaces of plastic materials;
   – faulty terminations, exposed live electrical parts;
   – any other conditions which could affect performance;
   – (for thin film PV modules) voids in, and visible corrosion of any of the thin film layers of the active circuit.
10) Make note of and photograph the nature and position of any visual defects, cracks, bubbles or delaminations, etc. which could worsen and adversely affect the module performance.
11) Photograph the PV module.

f) Note if the DUT can be turned on while it is being charged with its PV module.
g) Note the DUT's primary form factor (fixed indoor, fixed outdoor, portable separate, portable integrated, or other) and also note any secondary form factors.
h) Note the DUT's expected use(s) (e.g. ambient, torch, task).
i) Provide any general comments regarding the DUT's properties, features, and/or information.

F.4.2 Specifications

F.4.2.1 General

All relevant DUT specifications are recorded for later comparison in testing results. This part of the procedure may be completed on a single sample.

F.4.2.2 Equipment requirements

No equipment is required for this part of the visual screening procedure.

F.4.2.3 Test prerequisites

The DUT should be new, unaltered, and in its original packaging. Read the DUT's box and documentation for instructions on using the DUT. Consult the manufacturer for missing information pertaining to the required observations.

F.4.2.4 Apparatus

No apparatus is required for this part of the visual screening procedure.

IECNORM.COM : Click to view the full PDF of IEC TS 62257-9-5:2016 RLV
Withdrawn

F.4.2.5 Procedure

Examine the DUT's packaging, user's manual, and components for battery, lamp, charge controller, included appliances and PV module specifications. While obtaining the specifications, the DUT should not be opened or otherwise tampered with in any way. The internal inspection of F.4.3 can reveal more product specifications, which should be included with the specifications from F.4.2 and noted accordingly.

a) When provided, note the following specifications (in the specified units), indicate and photograph the source(s) of each, and comment on any specification discrepancies. Indicate if the specification is not provided but can be ascertained by observation (e.g. battery chemistry and battery nominal voltage).

   1) Battery chemistry (SLA, NiCd, NiMH, Li-Ion, $LiFePO_4$, or specify other).
   2) Rated battery capacity, in milliamp hours (mAh).
   3) Battery nominal voltage, in volts (V).
   4) Lamp type (LED, compact fluorescent, linear fluorescent, incandescent, or specify other).
   5) Lamp driver (constant voltage source, constant current source, pulse width modulation, resistor, or specify other).
   6) Charge controller present (yes/no).
   7) Charge controller deep discharge protection voltage, in volts (V).
   8) Charge controller overcharge protection voltage, in volts (V).
   9) PV module maximum power point power (P_{mpp}), in watts (W).
   10) PV module open circuit voltage (V_{oc}), in volts (V).
   11) PV module short circuit current (I_{sc}), in milliamperes (mA).
   12) PV module maximum power point voltage (V_{mpp}), in volts (V).
   13) PV module maximum power point current (I_{mpp}), in milliamperes (mA).
   14) Included appliances (specify what is included).
   15) Appliance input voltage range (V).
   16) Appliance maximum power usage (W).
   17) Appliance average power usage (W).
   18) Appliance standby power usage (W).
   19) Where available, note basic television specifications – the screen size (inch), TV technology (LCD, LED, Plasma or CRT), antenna type, built-in DVD player, AC power adapter included and built-in FM tuner/radio capabilities.
   20) Where available, basic fan specifications – the fan diameter in millimetres (mm), speed settings, type of stand and ceiling mounting.
   21) Where available, note for any included radio specifications – the radio bands, built-in MP3 player, battery chemistry, battery capacity in ampere hours (Ah), nominal battery voltage in volts (V) and battery run time specified.
   22) Where available, note for any included portable video player specifications – the screen size (inch), DVD player, AC power adapter included, USB inputs, memory card slots, built-in FM tuner/radio capabilities, built-in MP3 player, battery chemistry, battery capacity in ampere hours (Ah), nominal battery voltage in volts (V) and battery run time specified.
   23) Where available, note for any included refrigerator specifications – the refrigerator capacity in litres (L), the freezer capacity in litres (L), the energy use per day in watt·hours per day (Wh/day) and the temperature the energy use is specified for in degrees Celsius (°C).
   24) Where available, note for any other included appliances any relevant specifications on their use.

IECNORM.COM : Click to view the full PDF of IEC TS 62257-9-5:2016 RLV
Withdrawn

b) When provided, record the following run time specifications, in hours (h), indicate and photograph the source(s) of each, and comment on any discrepancies:

   1) Note the number of hours of operation on a full battery charge for all lamp settings (full-battery run time) and all appliance uses specified.

   2) Note the number of hours of operation on a battery charge from a day of solar charging for all lamp settings (daily solar run time) and all appliance uses specified.

   3) Note the number of hours of operation after a specified electromechanical charge period for all lamp settings (electromechanical run time ratio).

   4) Note the number of hours of operation after a specified AC/DC adapter charge period for all lamp settings (grid run time).

   5) Note and describe any specified run times that do not fit into the previous four categories.

   6) Note any claims regarding charging of mobile phones or other devices, including the number of devices, types of devices, energy availability or hours of charging, etc.

c) Where available, note any light output specifications, in lumens (lm), indicate and photograph the source(s) of each, the corresponding lamp setting(s), and comment on any discrepancies.

F.4.3 Functionality and internal inspection

F.4.3.1 General

An internal inspection is performed to assess the electronics and soldering workmanship. The DUT and included appliances fail the inspection if poor internal workmanship inhibits the DUT and included appliances from properly functioning. This part of the procedure should be completed for every sample being tested.

F.4.3.2 Equipment requirements

The following equipment is required. Equipment shall meet the requirements in Table CC.2.

- Bright task light with good colour rendering.
- Miscellaneous hand tools (screwdrivers, wrenches, etc.) to disassemble DUT.
- Camera to document DUT characteristics with particular attention to potential points of failure (e.g. cold solder joints).
- DC voltmeter or multimeter for conducting basic electronic integrity and functionality tests
- Optional: DC current clamp meter.

F.4.3.3 Test prerequisites

The DUT and included appliances should be new, unaltered, and in original packaging. Read the retail box and documentation for instructions on using the DUT and included appliances. Consult the manufacturer for missing information pertaining to the required observations. If the DUT or appliance instructions require them to be fully charged prior to operation, do so prior to conducting this test.

F.4.3.4 Apparatus

The DUT and included appliances should be positioned under a bright task light for examination.

F.4.3.5 Procedure

The following steps shall be followed.

a) Check the functionality of the DUT and included appliances before disassembling.

   1) Do the DUT and included appliances work as described with provided documentation?

IECNORM.COM : Click to view the full PDF of IEC TS 62257-9-5:2016 PLV
Withdrawn

2) Do the DUT and included appliances charge as described with provided documentation? Be sure that any included grid charger properly functions.

3) Do all of the DUT and included appliances' switches and connectors function as they should?

4) Comment on any notable characteristics of the DUT's light output (e.g. glare, colour, inconsistency between samples).

5) Comment on any notable characteristics of the functionality of the DUT's included appliances.

6) Comment on the proper functioning of DUT's indicator lights (such as a charging indicator) and/or informative displays (such as a display showing the battery's state of charge), if applicable.

7) Comment on any faulty operation and provide photographs, if necessary.

8) A DUT is considered to no longer function if any of the following functions fail to work with the battery at the appropriate state of charge:

   – one or more included appliance will not turn on;

   – any of the light sources, arrays and light points will not turn on;

   – the product will not charge via solar, and/or grid, and/or mechanical, as applicable;

   – battery is unsafe (leaked fluid, inflated, etc.).

b) Inspect the DUT and included appliances for potential hazards or safety issues, such as:

– bare conductors;

– sharp points and edges that can cut someone (including exposed screws and fasteners with sharp points and edges);

– plugs that could exceed ampacity ratings if improperly used;

– electrical situations that could lead to a fire;

Make note of and photograph any potential hazards or safety issues identified.

c) Disassemble the DUT and included appliances so the following internal observations can be made.

1) Inspect the electronic components' quality and workmanship. Document the workmanship with comments and photographs. Record the number of observations of each deficiency listed below for each sample examined:

   – soldering: note any poor solder joints, such as cold joints or joints with insufficient or excess solder;

   – wiring: note any poor wiring, such as a badly pinched wire;

   – fixture: note any poor securing of internal components, such as poor gluing that is likely to fail;

   – battery:

   • note any battery-related deficiency, such as inflated batteries, fluid leakage, or corrosion of battery terminals. If lithium batteries are inflated or fluid is present, these batteries are dangerous and shall not be used for any additional tests. Dispose of the battery properly.

   • note if the battery is adequately fastened, such as with screw mounts;

   – safety: note anything that could result in a safety concern, such as a potential for shorting the product's battery if two bare wires near each other could touch;

   – functionality: functional deficiencies include an indicator light or display failing to work, a non-functional accessory (such as extension cable), and an extra port not functioning. Functional deficiencies are not large enough to result in the product no longer functioning according to F.4.3.5 a) 8) , above.

2) Determine the product's total deficiencies score. Sum the number of deficiencies observed between the examined samples for soldering, wiring, fixture, and battery. Sum and triple the number of deficiencies observed between the examined samples for

IECNORM.COM : Click to view the full PDF of IEC TS 62257-9-5:2016 RLV
Withdrawn

safety and functionality. Add these two sums together and divide by the number of samples examined – this is the total deficiencies score.

3) Determine the workmanship quality using the following guidelines:
   - good: no deficiencies were observed with the samples examined, and all samples being tested continued to function throughout normal use during testing without any hazards or safety issues;
   - fair: deficiencies score is greater than 0 but less than or equal to 1,25, and all of the samples being tested continued to function throughout normal use during testing without any hazards or safety issues;
   - poor: one or more sample being tested discontinued to function throughout normal use during testing or developed one or more hazards or safety issues, or deficiencies score is greater than 1,25.

   The workmanship quality may be reassessed upon completion of the DUT's testing, as samples can stop functioning under normal use during a later test.
4) Indicate whether the DUT and included appliances use cable strain reliefs and, if so, which cables have strain reliefs. Document with photographs.
5) Indicate methods used to secure parts inside the DUT and included appliances (e.g. screws, glue, tape, clamps/straps, or other) and document with photographs.
6) Indicate methods used for securing wire and cable connections (e.g. solder, harness, terminal junction) and document with photographs.
7) Note if the DUT and included appliances have an easily replaceable battery and/or printed circuit board (PCB). The battery and PCB are easily replaceable if they can be interchanged without any tools other than screwdriver(s) (i.e. no soldering or splicing) that are used only for the removal and replacement of screws (i.e. no prying). Note if any instructions are included for replacing the battery and/or PCB.
8) Examine the internal components, especially the batteries, and note any specifications that were not apparent in F.4.2.5.
9) Note if the batteries contain any internal circuitry. This type of circuitry typically consists of a small printed circuit board located beneath a plastic jacket encasing the battery. Document with photographs.
10) Some batteries utilize safety and/or cell balancing circuitry on the DUT's PCB. By this arrangement, the battery requires intelligence from the DUT's PCB for proper charging and/or discharging. Note if the DUT's battery utilizes a safety/cell balancing circuit on the DUT's PCB. This arrangement can be observed as additional wire connections between the battery and the PCB. Consult the manufacturer if uncertain.

    NOTE Additional wire connections between the battery and the PCB can have other functions as well; for example temperature sensing. Voltage measurements of the additional wires can be helpful in assessing their function; voltages on wires added for cell monitoring and/or balancing will be multiples of the cell voltage.
11) Note the DUT and included appliances' overall internal workmanship quality. Document the internal workmanship with descriptions and photographs.

F.5 Reporting

Report the following in the visual screening test report.

- Metadata:
  - report name;
  - procedure(s) used;
  - DUT manufacturer;
  - DUT name;
  - DUT model number;
  - name of test laboratory;

IECNORM.COM : Click to view the full PDF of IEC TS 62257-9-5:2016 RLV
Withdrawn

  - approving person;
  - date of report approval.
- Manufacturer contact information (e.g. website, email address, phone number, etc.).
- Retail box description, if available.
- User's manual information:
  - included with DUT (yes/no);
  - type (e.g. booklet, pamphlet, sheet);
  - language;
  - comments.
- Proper disposal instructions information, if available.
- Battery replacement instructions, if available.
- Hazard labelling, if available.
- Warranty information, if available:
  - duration (months);
  - description of terms and conditions.
- Complete DUT information (e.g. battery unit, lamp units, control unit, appliances):
  - mass (g);
  - list of components included in mass measurement.
- DUT cable information:
  - length of all cables except those used to connect PV modules (m);
  - cable to be used outdoors (yes/no);
  - certification documents provided for cables to be used outdoors (yes/no);
  - description of all cables except those used to connect PV modules.
- DUT component information:
  - length of each component (cm);
  - width of each component (cm);
  - height of each component (cm);
  - number of each component included with DUT;
  - description of each component.
- DUT lamp unit technology information:
  - type of each unique lamp unit variety (e.g. LED, CFL, incandescent.);
  - number of light points in each unique lamp unit variety;
  - number of arrays in each unique lamp unit variety;
  - description of each unique lamp unit variety's technology use.
- Description of DUT arrangement in expected typical use.
- DUT setting information:
  - name of all individual light output settings;
  - description of each individual light output setting.
- DUT and included appliances materials information:
  - list of all materials used to construct each DUT component (e.g. glass, balsa wood, plastic);
  - description of all DUT components construction materials.
- DUT included appliances indicators information:

IECNORM.COM : Click to view the full PDF of IEC TS 62257-9-5:2016 RLV
Withdrawn

  - list of all indicators present on each DUT component (e.g. battery charge indicators);
  - description of all DUT component indicators.
- DUT included appliances features information:
  - list of all features present on each DUT component (e.g. handles, mounting brackets, stand);
  - description of all DUT component features.
- DUT accessories included appliances information:
  - radio included (yes/no);
  - mobile phone charging capability (yes/no);
  - descriptions of included appliances;
  - descriptions of other included DUT accessories and connectors.
- DUT charging mechanism information:
  - grid charging supported (yes/no);
  - electromechanical charging supported (yes/no);
  - solar charging supported (yes/no);
  - description of each included charging mechanism.
- DUT DC ports information:
  - number of distinct port types;
  - description of each port type;
  - receptacle type for each port type;
  - number of identical ports of each type;
  - nominal port voltage for each port type;
  - rated maximum port current for each port type;
  - whether each port type is intended or expected to be used for charging mobile phones.
- DUT PV module information:
  - length of each PV module (cm);
  - width of each PV module (cm);
  - active area of each PV module (cm^2);
  - form of each PV module (external or integrated);
  - cable length of each PV module (m);
  - active solar material of each PV module (e.g. mono-Si, amorphous, CIS);
  - encasing of each PV module (e.g. lamination, glass);
  - description of any PV module visual defect conditions;
  - description of the robustness of each PV module;
  - description of PV module junction box workmanship;
  - other PV module information.
- DUT form factor and use information:
  - DUT's primary form factor (e.g. fixed indoor, fixed outdoor);
  - DUT's secondary form factor(s);
  - DUT's expected use(s) (e.g. ambient, torch, task).
- Overall comments based on the visual inspection.
- Provided DUT specification information, if available:
  - battery chemistry and source of information

IECNORM.COM : Click to view the full PDF of IEC TS 62257-9-5:2016 RLV
Withdrawn

  - rated battery capacity (mAh) and source of information;
  - battery nominal voltage (V) and source of information;
  - lamp type(s) and source of information;
  - lamp driver and source of information;
  - presence of charge controller (yes/no) and source of information;
  - charge controller deep discharge protection voltage (V) and source of information;
  - charge controller overcharge protection voltage (V) and source of information;
  - PV module P_{mpp} (W) and source of information;
  - PV module V_{oc} (V) and source of information;
  - PV module I_{sc} (A) and source of information;
  - PV module V_{mpp} (V) and source of information;
  - PV module I_{mpp} (A) and source of information.
- Description of any provided DUT specification discrepancies.
- Provided appliance specification information, if available.
- Description of any provided appliance specification discrepancies.
- Provided DUT run time information, if available:
  - full-battery run time (h) for each setting and source of information;
  - daily solar run time (h) for each setting and source of information;
  - electromechanical charge ratio for each setting and source of information;
  - grid run time (h) for each setting and source of information;
  - claims regarding mobile phone or other device charging abilities;
  - other run time (h) for each setting and source of information.
- Description of any provided run time discrepancies.
- Provided light output (lm) for each setting and source of information.
- Description of any light output discrepancies.
- DUT and appliances function out of box (yes/no).
- All switches and connectors function for each DUT sample and appliances with comments as necessary (yes/no).
- Description of any potential hazards or safety issues.
- Description of cable strain relief methods used and for which connections, if applicable.
- Number of poor solder joints and workmanship deficiencies for each DUT sample and appliances with comments as necessary.
- Total deficiencies score.
- Workmanship quality (good/fair/poor).
- Means (e.g. screws, glue, tape) used to secure parts in each DUT component (e.g. lamp unit(s), charge controller, PV module(s),appliances).
- General fixture of parts comments.
- Easily replaceable battery and PCB for the DUT and appliances (yes/no).
- Comments on ease of battery and/or PCB replacement.
- Overall description of internal workmanship.
- Figures:
  - properties, features, and information photographs;
  - specifications photographs;

IECNORM.COM : Click to view the full PDF of IEC TS 62257-9-5:2016 RLV
Withdrawn

– functionality and internal inspection photographs.

Withdrawn
IECNORM.COM : Click to view the full PDF of IEC TS 62257-9-5:2016 RLV

Annex G
(normative)

Sample preparation

G.1 Background

The product sample shall be prepared before starting the tests. The preparation includes configuring the product to allow connection with a laboratory power supply, as well as taking measurements. For DUTs with multi-cell lithium battery packs, the preparation also includes charging the product.

G.2 Test outcomes

There are no sample preparation outcomes.

G.3 Related tests

The sample preparation procedures shall be performed on all DUTs prior to conducting the light output test (Annex I), lumen maintenance test (Annex J), battery test (Annex K), full-battery run time test (Annex M), grid charge test (Annex O), electromechanical charge test (Annex P), solar charge test (Annex R), charge controller behaviour test (Annex S), light distribution test (Annex T), battery durability test (Annex BB), protection tests (Annex DD), assessment of DC ports (Annex EE), and appliance tests (Annex FF).

G.4 Procedure

G.4.1 General

The DUT is configured in order to make measurements of current and voltage during selected tests, charge the DUT's battery via a battery analyser, and simulate a specified battery voltage during selected tests with a laboratory power supply. In some cases, this will mean selecting and attaching the correct plug and receptacle components. In other cases, the DUT will need to be modified, by cutting wires and/or drilling holes, to allow electrical connections. When possible, the testing laboratory shall use all cables and connectors that are provided with the DUT and shall configure the system according to product instructions and in way consistent with the normal use of the product. Any modifications shall be kept to a minimum. Additional configuration information can also be found in Annex H and Figure H.1.

G.4.2 Equipment requirements

The following equipment and supplies, or their equivalent, are required. Equipment and supplies shall meet the requirements in Table CC.2.

- Plugs and receptacles (e.g. pin-and-socket connectors) that connect to the DUT electrical ports to allow the use of a laboratory power supply and battery analyser with the DUT appliances.
- Insulated stranded copper wire. The conductor size shall be 0,75 mm^2 or thicker; for many products, it is necessary to use thicker wire to avoid introducing excessive voltage drop. The required conductor size depends on the wire length, the maximum current, and the sensitivity of the product to voltage drop; in all cases, the wire size shall be sufficient to avoid significantly affecting the behaviour of the DUT. Recommended minimum wire sizes are given in Table G.1. It is recommended to use four different colours.
- Wire cutters.

IECNORM.COM : Click to view the full PDF of IEC TS 62257-9-5:2016 RLV

- Wire strippers.
- Soldering iron and solder.
- Heat-shrink tubing and heat gun.
- Screwdrivers and/or other appropriate tools for opening the DUT.
- Optional for DUTs with multi-cell lithium battery packs: DC power supply.
- Optional: DC current clamp meter.
- In some cases: a power drill with an appropriately sized drill bit to make a hole in the DUT's enclosure to fit four extension wires.

Table G.1 – Recommended minimum conductor sizes for copper wire

Expected maximum current A	Minimum wire thickness mm^2	Minimum wire thickness (American wire gauge)
≤ 2,0	0,75	--
≤ 2,2	0,82	18
≤ 3,5	1,31	16
≤ 4,0	1,50	--
≤ 5,5	2,08	14
≤ 6,7	2,50	--
≤ 8,8	3,31	12
≤ 10,7	4,00	--
≤ 14,0	5,26	10

G.4.3 Test prerequisites

The DUT's visual screening shall be completed prior to performing the sample preparation procedures.

G.4.4 Procedure

The following steps shall be followed.

a) For DUTs with multi-cell lithium battery packs, fully charge the product using the DUTs charging circuitry to ensure the DUT has been given the opportunity to balance the cells of its battery pack. Use one of the two following options.

- With the DUT configured for charging (e.g. solar module connected to main unit), face the DUT's solar module towards the sun until the DUT reaches a full charge. Be sure to protect the DUT from water ingress.
- For locations with minimal sun, charge the DUT using a power supply. Set the power supply to the DUT's rated maximum power-point voltage and current. For DUTs with separate solar modules, use a severed PV connector to deliver the power to the DUT's PV socket. For DUTs with integrated solar modules, open the DUT to access and sever the leads between the solar module and electronics to deliver the power through the DUT's electronics. If the DUT's maximum power-point voltage and current values are not rated, contact the DUT manufacturer to obtain the values.

  To determine when the DUT is fully charged, the lab may use the DUT's instructions or check that current no longer enters the DUT's battery pack with a current clamp meter when the solar module is exposed to sun or power supply is providing power.

b) Identify the DUT's system components and appliances and determine the method of electrical connections between system components.

IECNORM.COM : Click to view the full PDF of IEC TS 62257-9-5:2016 RLV
Withdrawn

c) Modify the DUT to electrically isolate the battery from the DUT electronics. This will allow the battery to be tested and will also allow the DUT electronics and ports to be powered from a laboratory power supply.

1) With wire cutters, cut the positive and negative wires individually where the DUT's battery connects with the rest of the DUT circuit. To avoid a short circuit, which could result in personal injury, fire, or explosion, do not cut the wires simultaneously. In some cases, additional wires are attached between the DUT's battery and circuit for battery temperature monitoring and/or cell balancing – do not cut these wires. Some batteries have two wires connected to each battery terminal – keep the wires attached to each terminal together and treat them as one wire end for the remainder of the procedure.

2) Extend the four wire ends (two connected to the battery terminals, two connected to the DUT's PCB or other electronics) by soldering on additional wires. Make the wire extensions long enough to be extended approximately 6 cm outside the DUT's enclosure. To avoid electric shock, keep the battery positive and negative extensions separated. Cover the wire connections with heat-shrink tubing once soldered. To minimize voltage drop, the conductor size of the extension wires added in this step shall be ≥ 0,75 mm^2 (see recommendations in Table G.1) and equal to or larger than the existing DUT battery supply wires. Wire extensions shall be kept as short as possible. The laboratory shall monitor the behaviour of the DUT to ensure that modifications do not significantly change the DUT's performance. Changes in performance can include changes to the DUT's power consumption, output, or any other function that is substantially different than the function of the unaltered sample.

NOTE In the American wire gauge (AWG) system, 18 AWG (0,823 mm^2) is the smallest conductor size meeting this requirement.

3) Close the DUT such that the wires can extend outside the DUT's enclosure without being pinched.

Some products are designed with openings in their enclosures such that the wires can fit through these openings without physically changing the DUT's enclosure.

Some products do not have openings for wire extensions to fit through, in which case a hole shall be drilled into the side of the DUT's enclosure. A drill bit with a diameter slightly greater than the combined diameter of all four extension wires should be used. Choose a location on the DUT's enclosure to minimize the extension wire length and minimize changes to the DUT's enclosure. Be sure that the extension wires do not interfere with the DUT's light output.

Optionally, attach connectors (e.g. pin-and-socket connectors) to the ends of the extension wires for easy use during testing. Attach the battery positive and negative extension wires in one half of the connector pair and the DUT power supply lead wires in the other half of the connector pair. If no connectors are used, be sure to keep the battery positive and negative extensions separate when bare to avoid short-circuiting the battery. Covering the ends of the wires with electrical tape is one method to keep the extensions separate.

The full-battery run time test (Annex M) and charge controller behaviour test (Annex S) impose limits on the total series resistance of the measurement apparatus. To meet these requirements, the use of connectors, soldered connections, or screw terminals is recommended.

4) To ensure the DUT still works after it has been rewired, connect the wire pairs (with connectors or electrical tape) so the original, unaltered circuit is replicated and turn the DUT on. If the DUT does not turn on, check that the wires are connected correctly and that the solder joints connecting wires are good. Some products require having their PV modules attached with light shining on the PV module to get the product to turn on; afterwards, the PV module can be removed and the product will continue working until its circuit is broken again.

d) (optional) In some situations, it is acceptable for a test lab to supply a regulated voltage from a power supply directly to an appliance plug or wire end instead of supplying power to the DUT power control unit. This method shall be used only if the appliance is normally supplied power by a voltage-regulated port (constant voltage). Built-in or permanently connected appliances as defined by EE.4.2.5 f) cannot be tested by this procedure. If the

IECNORM.COM : Click to view the full PDF of IEC TS 62257-9-5:2016 RLV
Withdrawn

test lab is uncertain about the voltage regulation of the port, this procedure shall not be used; instead, the lab shall use b) above.

1) Identify the positive and negative terminals or leads on the DUT's plug and receptacle connectors. This can be done by checking DUT instructions or by measuring the voltage polarities on the connector terminals with the DUT turned ON.
2) Configure plug and receptacle components to mate with the DUT system components and allow the use of a laboratory power supply (to power the appliances) and a battery analyser (to test the battery(-ies)). In cases where suitable plug and receptacles cannot be found, the DUT may be modified by cutting off connectors and/or opening DUT enclosures and proceeding with the DUT modifications outlined above. When possible, use the cables and connector components that are provided with the DUT and intended for normal operation.

G.4.5 Calculations

No calculations are required with the sample preparation procedures.

G.5 Reporting

No reporting is required with the sample preparation procedures.

Withdrawn
IECNORM.COM : Click to view the full PDF of IEC TS 62257-9-5:2016 RLV

Annex H
(normative)

Power supply setup procedure

H.1 Background

Several of the photometric test procedures replace the battery with an external laboratory (bench) power supply to provide electrical power to the DUT for the duration of the test. Annex H specifies the power supply equipment requirements and setup procedure for these tests.

In order to correctly simulate the battery and provide the DUT accurate direct current (DC) power, the power supply shall be configured properly to eliminate errors that can occur from:

- voltage drops from the resistance of the lead wires, and
- electronic noise in the lead wires from either the DUT or the test environment.

These errors can (in most cases) be eliminated with a 4-wire test configuration and input filter capacitors.

H.2 Test outcomes

The test outcome of the power supply setup procedure is listed in Table H.1.

Table H.1 – Power supply setup test outcome

Metric	Reporting units	Related aspects	Remarks
Standard operating voltage	volts	n/a	Used when a typical battery voltage during discharge is needed.

H.3 Related tests

Annex H is related to the light output test (Annex I), the lumen maintenance test (Annex J), the solar charge test (Annex R), the charge controller behaviour test (Annex S), and the light distribution test (Annex T). In some unusual cases (battery types other than lead-acid, NiMH, lithium iron phosphate, or other lithium-ion), it is necessary to perform the battery test (Annex K) in order to determine the standard operating voltage in H.5.2.

H.4 Equipment requirements

The DC power supply shall be capable of delivering a stable, accurate DC input to the DUT. The power supply should have a voltage readout resolution of at least 0,01 V and a current readout resolution of at least 0,001 A. The voltage applied to the DUT should be regulated to within ±0,2 % during photometric measurements, charge controller tests, and solar charging tests and ±3 % for the duration of lumen maintenance tests. Equipment shall meet the requirements in Table CC.2.

Some test configurations may use power supplies without voltage and current readouts capable of measuring voltage and current values. For example, a single power supply may be used to run concurrent lifetime tests on multiple DUT's (the DUT's are run in parallel from a single DC voltage rail). For these configurations, voltage measurements may be made at each

IECNORM.COM : Click to view the full PDF of IEC TS 62257-9-5:2016 RLV
Withdrawn

DUT input using a voltmeter or multimeter and current measurements may be made using a voltage drop measurement on a series shunt resistor using Ohm's law.

H.5 Setup procedure for photometric measurements and lumen maintenance tests

H.5.1 Test setup

The following steps shall be followed.

a) The power supply and DUT are configured according to Figure H.1. Input filter capacitors shall be placed at the device input according to H.5.5.

b) The voltage level is set according to H.5.2 and measured according to H.5.4.

c) The DUT is powered on and allowed to stabilize for ≥ 20 min according to H.5.3.

d) Tests are performed on the DUT.

e) During testing, monitor the DUT for erratic behaviour that could indicate a problem with the test setup, including light output flickering, voltage and current instability, and difficulty in device start-up.

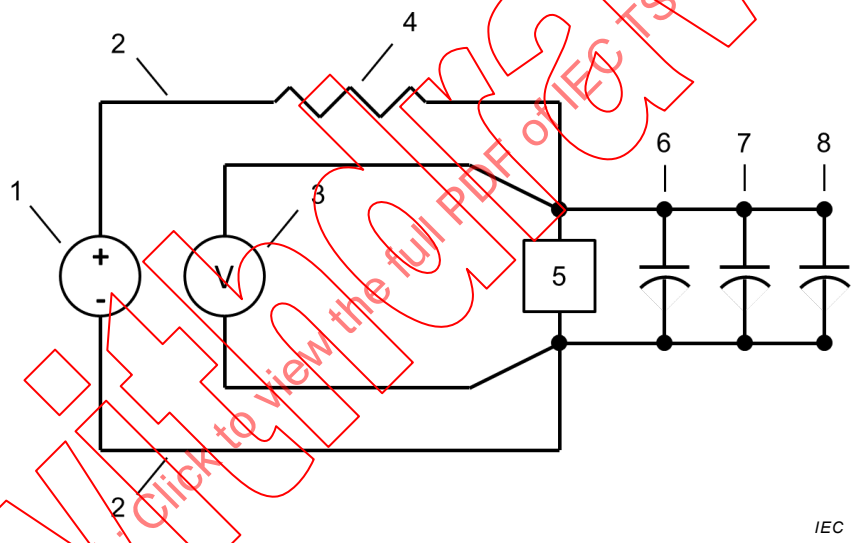

Key

1 DC power supply
2 Lead wire
3 Voltage sense
4 Series shunt resistor (optional)
5 DUT
6 1 µF capacitor
7 10 µF capacitor
8 100 µF capacitor

Figure H.1 – 4-wire test configuration with input filter capacitors

H.5.2 DC voltage and current levels

The constant DC voltage level for testing a product sample is based on the test requirements and battery characteristics.

When supplying power with a laboratory power supply to the DUT power control unit, either the average operating voltage (corresponding to the voltage at the average light output operating point found during the full-battery run time test, Annex M) or the standard operating

IECNORM.COM : Click to view the full PDF of IEC TS 62257-9-5:2016 RLV
Withdrawn

voltage (Table H.2) is used. This simulates the DUT's battery voltage. The standard operating voltage can be more appropriate for products with multiple lighting appliances, in which the typical operating point determined in the full-battery run time test is less representative of the full variety of use conditions. The standard operating voltage is also useful for the lumen maintenance test (Annex J), in which it is often impractical for laboratories to drive multiple samples at different voltages.

When supplying power with a laboratory power supply directly to a light point (and not using the DUT power control unit), the typical port voltage as determined in EE.4.4 is used. This simulates the DUT's port voltage for that appliance.

The standard operating voltage depends on the type, configuration, and number of cells of the battery pack. This is typically provided by the manufacturer but may be determined by testing the discharge profile (Annex K) and inspecting the battery.

The standard operating voltages for several battery chemistries are listed in Table H.2. For unknown or new types of batteries, it is possible to estimate a standard operating voltage using the average voltage during the final discharge cycle in the battery capacity test (Annex K).

Table H.2 – Standard operating voltage for several common battery types

Battery type	Standard operating voltage V/cell
Valve-regulated lead-acid	2,05
NiMH	1,25
Lithium iron phosphate	3,2
Other lithium ion	3,7
Other battery chemistry	Use a typical discharge voltage as determined from manufacturer-provided battery specifications or the battery test (Annex K).

During testing, some DUTs do not start up at the desired voltage and require an input slightly greater than the desired battery voltage. In this case, incrementally increase the power supply voltage by 0,05 V until the DUT is operational at the desired light setting. After start up, reduce the voltage back to the desired battery voltage and allow the DUT to stabilize. If the DUT will not remain on when the voltage is reduced, repeat this step and run the DUT as close to the desired battery voltage as possible, making note of the issue.

The current level of a DUT powered with an external power supply should be at or near the current level measured in the full-battery run time test for the desired setting (see M.4.2.5). Variations greater than 5 % can indicate a problem with the power supply setup and should be noted in the test report.

H.5.3 Stabilization period

A DUT shall be allowed to stabilize (warm up) before light output measurements are made. There are two approved stabilization procedures in Annex H.

a) The DUT is powered on and allowed to stabilize for 20 min.

b) The DUT is powered on and is considered stable when three consecutive output measurements, taken 15 min apart, have a variation of ≤ 0,5 % (IES LM-79-08).

In order to facilitate testing of multiple samples, 20 min is specified as the minimum stabilization time and is adequate for most products. Longer times can be necessary for DUT's with large heat sinks or high-powered LEDs. Voltage, current, and light output for a

IECNORM.COM : Click to view the full PDF of IEC TS 62257-9-5:2016 RLV
Withdrawn

DUT should be monitored to determine if 20 min is an adequate stabilization time. If a longer stabilization time is necessary, the IES LM-79-08 procedure may be used to determine the stabilization time for a single DUT sample, and this time may then be used to test additional DUT samples of the same type.

H.5.4 4-wire power supply measurements

Current carrying lead wires used to provide power to the DUT should be appropriately sized and as short as possible, and shall be separate from the wires used to measure the device voltage (Figure H.1). This is typically referred to as a 4-wire test measurement, and eliminates the voltage drop associated with the resistance of the test leads because very little electric current is carried in the voltage sensing wires. Many power supplies are equipped to handle this measurement automatically (also known as remote sensing), although test personnel may make corrections by adjusting the sense voltage manually.

H.5.5 Filtering electronic noise

Electromagnetic interference (EMI) generated by the DUT or the test environment can interfere with voltage and current measurements. This can occur from switching power supplies found in some electronic devices and is exacerbated by using long lead wires from the power supply to the DUT. Problems with EMI will typically cause input voltage and current instability, and often can result in light output variation in the DUT.

Input capacitors shall be placed at the DUT input connections, between supply positive and negative leads, as close to the device as possible. The capacitors should be ceramic chip or tantalum types and have 1 μF, 10 μF, and 100 μF values. These three capacitor values, used in parallel, will effectively mitigate most EMI problems.

H.5.6 Troubleshooting

If the DUT will not turn on after replacing its battery with a power supply, try the following steps, in order. If the DUT turns off or drops to a lower light output setting after a period of time, try the following steps starting with step b). If possible, consult the product manufacturer to ensure that any troubleshooting steps taken will not damage the product.

a) Follow the above guidelines in H.5.1 for replacing the DUT's battery with a power supply. If the product is solar-charged, plug in the DUT's solar module into its charging socket (plugging is not required for integrated DUTs) and shine a bright light very close to the solar module. If the light does not turn on, try cycling the DUT's on/off switch. After the light turns on, the solar module can be removed.

b) Follow the above guidelines in H.5.1 for replacing the DUT's battery with a power supply. Use an additional power supply to provide a voltage-controlled input to the DUT's solar module socket (for products with external solar modules) at the solar module's maximum power point voltage (V_{mpp}) and maximum power point (I_{mpp}). (In some cases, it is necessary to obtain the appropriate voltage and current values from the product manufacturer.) The connector from the DUT's solar module shall be cut, stripped, and used to supply the simulated solar power to the DUT's solar module socket. For products with integrated solar modules, the wires connecting the solar module to the PCB shall be cut, and the wire leads still connected to the PCB shall be stripped. The voltage-controlled input shall be supplied to these leads. In some cases, it is necessary to supply the voltage-controlled input to the DUT's solar module socket (or solar PCB leads for products with integrated solar modules) for the duration of the test.

c) Instead of replacing the DUT's battery with a power supply, leave the battery connected within the DUT. Connect a "jumper" between the DUT's battery and electronics so that the battery voltage and current can be measured during the test. Also use an additional power supply to provide a voltage-controlled input to the DUT's solar module socket at the solar module's maximum power point voltage (V_{mpp}) and maximum power point current (I_{mpp}). (In some cases, it is necessary to obtain the appropriate voltage and current values from the product manufacturer.) The connector from the DUT's solar module shall be cut, stripped, and used to supply the simulated solar power to the DUT's solar module socket.

IECNORM.COM : Click to view the full PDF of IEC TS 62257-9-5:2016 RLV
Withdrawn

For products with integrated solar modules, the wires connecting the solar module to the PCB shall be cut, and the wire leads still connected to the PCB shall be stripped. The voltage-controlled input shall be supplied to these leads. In some cases, it is necessary to supply the voltage-controlled input to the DUT's solar module socket (or solar PCB leads for products with integrated solar modules) for the duration of the test.

d) If the product has a cell balancing or protection circuit that is external to the battery (i.e. on a PCB external to the battery), as determined during visual screening (F.4.3.5), that was disconnected between the battery and PCB, then incorporate resistors between each of the DUT's battery cell voltage inputs to provide the required voltages and allow the product to turn on. If possible, communicate with the product manufacturer to determine the proper resistor sizing, or if an alternative option is more appropriate. If cell balancing wires extend from the battery, these wires may be used to solder on the resistors. Only proceed with this option if safe, at the tester's discretion. The test lab shall ensure that the current drawn by the resistors does not result in an error of more than 1 % in any current measurement. In some cases, more complex circuitry is necessary to supply stable voltages to the DUT under all operating conditions.

H.6 Reporting

The voltage and current for tests using an external power supply shall be reported according to Table H.3.

Table H.3 – Voltage and current reporting requirements

	Notes
DC voltage	Regulated to within ±0,2 % during photometric measurements and ±3 % for the duration of lifetime tests
DC current	Measured using the power supply readout or series shunt resistor. Readout resolution should be ≥ 0,001 mA

IECNORM.COM : Click to view the full PDF of IEC TS 62257-9-5:2016 RLV
Withdrawn

Annex I
(normative)

Light output test

I.1 Background

The light output of a solar LED light is a key parameter as products that do not provide a sufficient amount of light have limited value.

Light output measurements (total luminous flux or lumen output) typically require the use of an integrating sphere or goniophotometer. An additional luminous flux measurement technique, referred to as the multi-plane method, involves conducting illuminance measurements on six planes that define a "box" around a test product and uses these measurements to calculate luminous flux. The multi-plane method is unique to IEC 62257 and is described in I.4.3.

Laboratories may measure total luminous flux using an integrating sphere, goniophotometer, or the multi-plane method.

The light output of all lighting appliances, with at least a 10 lumen output, supplied with the DUT shall be measured individually. If more than one identical lighting appliance is included with the DUT kit, only one of each type of identical lighting appliances shall be measured.

I.2 Test outcomes

The test outcomes of the light output test are listed in Table I.1.

Table I.1 – Light output test outcomes

Metric	Reporting units	Related aspects	Notes
Luminous flux	Lumens (lm)	4.2.9.1 Average luminous flux output	Measured using a DC power supply, light sensor, and integrating sphere or goniophotometer (or using a multi-plane measurement).
Correlated colour temperature (CCT)	Kelvin (K)	4.2.9.4 Colour characteristics	Measured using equipment capable of characterizing spectral distribution
Colour rendering index (CRI)	0-100 (unitless)	4.2.9.4 Colour characteristics	Measured using equipment capable of characterizing spectral distribution

I.3 Related tests

This annex is related to the full-battery run time test (Annex M) and the light distribution test (Annex T).

The light output test allows several alternatives for determining light output. The multi-plane method described in I.4.3 and a goniophotometer may be used to generate information on the distribution of the device (needed for Annex T) as well as information on light output. When these methods are utilized, data may also be used by Annex T to calculate illuminance on a plane, illuminance about an axis, and/or full width half maximum (FWHM) angles as described in T.4.3.6.

IECNORM.COM : Click to view the full PDF of IEC TS 62257-9-5:2016 RLV

I.4 Luminous flux measurement techniques

I.4.1 General

The luminous flux of all of the lighting appliances supplied with the DUT shall be measured. If more than one identical appliance is included with the DUT kit, only one of each set of identical appliances should be tested.

The following steps shall be followed.

a) Determine the method of supplying power to the lighting appliance(s). The appliance shall be connected either to a port on the DUT's power control unit or directly to a laboratory power supply. See Annex H for additional information on selecting an appropriate method to power the lighting appliance.

b) Prepare the test sample for lighting evaluation as described in Annex G. Set up a power supply to drive the DUT as described in Annex H. Measurements shall be taken in a conditioned space such that the air temperature is 24 °C ± 3 °C.

c) When connecting a lighting appliance to a port on the DUT's power control unit, use the average operating voltage (Annex M) or standard operating voltage (Annex H) to supply power from a laboratory power supply to the power control unit. The standard operating voltage can be more appropriate for products with multiple lighting appliances, in which the typical operating point determined in the full-battery run time test is less representative of the full variety of use conditions. All of the lighting appliances in the DUT kit shall be connected, powered on, and set at their highest output setting, unless otherwise specified in the product specification or requested by the client. Additional settings may be tested at the laboratory's discretion.

   When a DUT has multiple lights, these lighting appliances should be tested individually (for example, one lighting appliance is placed inside an integrating sphere and the others are powered on but left outside the sphere during the test). Though all lighting appliances are connected and powered on during the test, for DUTs with multiple identical lighting appliances, it is only necessary to measure one of each type of identical lighting appliances.

   EXAMPLE The DUT includes three different types of lighting appliances (e.g. a tube light, four ambient light points, and two more focused light points). In this case, three of the seven lighting appliances would be measured during testing – one of each lighting appliance type.

d) When connecting a lighting appliance directly to a laboratory power supply, use the typical port voltage (Annex EE) for the port to which the appliance is normally connected. The DUT shall be powered on and set to the highest output setting. It is only necessary to measure one of each type of identical lighting appliance.

   All DUT luminous flux measurements will be performed with the DUT(s) set to the highest output setting. Additional flux measurements shall be made to verify truth in advertising statements from the manufacturer when other light settings are advertised, or as required in the product specification.

e) Allow the DUT to stabilize according to H.5.3.

f) Record the voltage and current draw by the DUT at the DUT's input connector.

g) When powering DUT lighting appliances with a product's power control unit, record the voltage and current at the power control unit's battery input connector.

I.4.2 Luminous flux measurements with an integrating sphere or goniophotometer

Refer to the following standard test methods for the measurement of luminous flux with an integrating sphere or goniophotometer:

- CIE 084;
- CIE 127;
- IESNA LM-78-07;
- IESNA LM-79-08.

IECNORM.COM : Click to view the full PDF of IEC TS 62257-9-5:2016 RLV
Withdrawn

I.4.3 Luminous flux measurements using the multi-plane method

I.4.3.1 General

1 lux is equal to 1 lumen per square metre. This relationship is used in this method to obtain total lumen output by determining the average illuminance (lux) on a 1 m^2 surface at six surfaces (left, right, front, back, top, and bottom) that completely encompass the DUT and summing up the zonal lumen output from each of these six surfaces. This method is similar conceptually to the method by which lumen output is calculated by summing zonal lumen output for goniophotometric measurements.

When connecting a lighting appliance to a port on the DUT's power control unit, use the average operating voltage (Annex M) or standard operating voltage to supply power from a laboratory power supply to the power control unit. The standard operating voltage can be more appropriate for products with multiple lighting appliances, in which the typical operating point determined in the full-battery run time test is less representative of the full variety of use conditions. All of the lighting appliances in the DUT kit shall be connected, powered on, and set at their highest output setting. Only one lighting appliance can be tested at a time with this procedure. Other lighting appliances shall be covered or otherwise arranged so that no light from these appliances reaches the measurement plane.

Though all lighting appliances are connected and powered on during the test, for DUTs with multiple identical lighting appliances, it is only necessary to measure one of each type of identical lighting appliance.

EXAMPLE The DUT includes three different types of lighting appliances (e.g. a tube light, four ambient light points, and two more focused light points). In this case, three of the seven lighting appliances would be measured during testing – one of each lighting appliance type.

If the lighting appliance is to be connected directly to a laboratory power supply as described in G.4.4 d), rather than to a port on the DUT's power control unit, use the typical port voltage (Annex EE) for the port to which the appliance is normally connected. The DUT shall be powered on and set to the highest output setting. Additional settings may be measured at the discretion of the test laboratory to verify truth in advertising statements from the manufacturer when other light settings are advertised, or as required in the product specification. It is only necessary to measure one of each type of identical lighting appliance.

I.4.3.2 Equipment requirements

The following equipment is required. Equipment shall meet the requirements in Table CC.2.

- Illuminance meter.
- Multi-plane test apparatus (described below).
- DC power supply.
- DC voltmeter or multimeter.
- DC ammeter.

I.4.3.3 Test prerequisites

See general procedure (I.4.1).

I.4.3.4 Apparatus

The test requires a lighting distribution grid surface that can hold an illuminance meter over a 1 m^2 surface with 0,1 m spacing – an 11 × 11 grid with 121 points (Figure I.1). The 81 interior points each represent 100 cm^2 of surface area, the 36 edge points each represent 50 cm^2 of surface area, and the four corner points represent 25 cm^2 of surface area. The light is fixed 0,5 m away from the centre of the grid surface (the 0,5 m is measured from the centre of the light source itself).

IECNORM.COM : Click to view the full PDF of IEC TS 62257-9-5:2016 RLV
Withdrawn

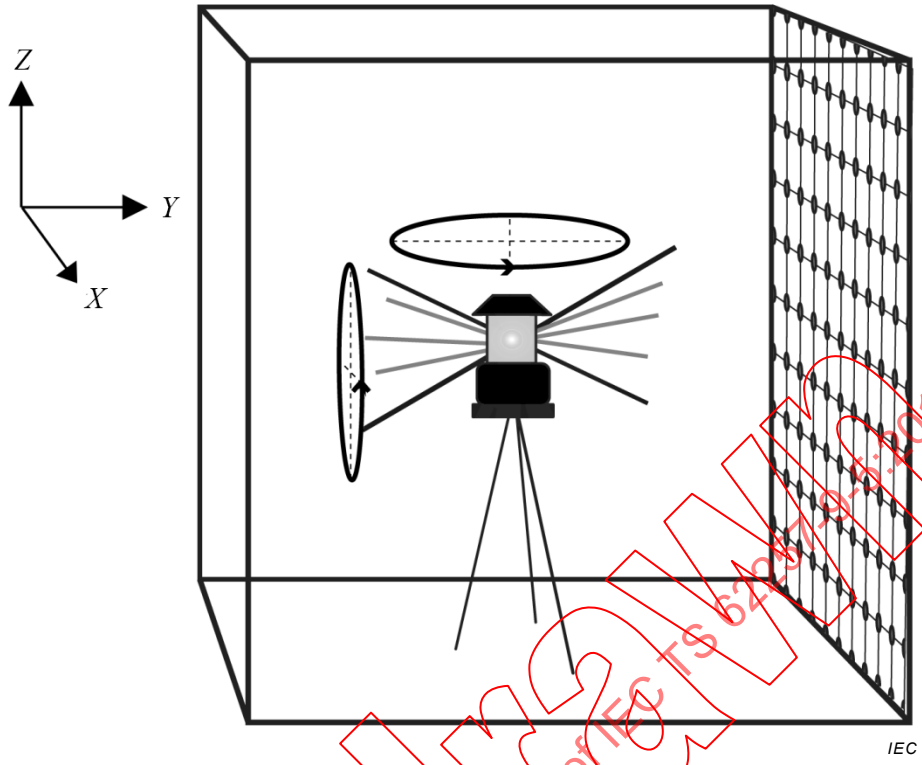

Figure I.1 – Conceptual schematic of the light output test setup, including the 11 × 11 grid, Cartesian coordinate axes for rotation reference, and the DUT

I.4.3.5 Procedure

In general, the light shall be situated so the first surface that is measured is the one that contains the peak of the overall light distribution. Subsequently, the light is carefully rotated to capture the other five surface measurements. Three of the remaining five positions are achieved by rotating the lamp exactly 90° about the vertical (Z) axis between each measurement. The remaining two positions are achieved by rotating the light about the horizontal (X) axis (see Figure I.1). After every rotation, the centre point of the light source should be exactly 0,5 m from the illuminance meter's sensor when it is placed in the centre of the measurement plane. The DUT shall be mounted using a turntable (rotating platform) or a clamping system.

Be sure no stray light hits the photometer and no reflections from other surfaces in the room interfere with the readings. Installing a black curtain around the test setup and having the test operator wear all black are recommended.

The steps shall be followed.

a) Arrange the room and prepare the DUT, ensuring the stand can hold the DUT steadily and enables precise rotation.

b) Set the voltage of an external power supply such that the voltage at the product is equal to the average operating voltage of the battery (Annex M) and operate the DUT for at least 20 min before the first measurement is taken. Follow power supply guidelines in the power supply set up procedure (Annex H).

c) Position the DUT such that the centre of its light source is 0,5 m away from the centre of the grid surface as shown in Figure I.1.

d) The centre of the grid surface shall read the highest light output provided by the DUT at a 0,5 m distance.

e) Measure illuminance levels at every 0,1 m distance on the grid surface, with the illuminance meter co-planar to the measurement grid (not normal to the light source).

IECNORM.COM : Click to view the full PDF of IEC TS 62257-9-5:2016 RLV
Withdrawn

f) Measure illuminance levels for the grid points that read a lux value greater than the resolution of the illuminance meter and greater than 0,2 % of the maximum lux reading from the first surface measured.

g) Rotate the DUT 90° clockwise, repositioning the DUT, if necessary, such that the centre point of the light output is exactly 0,5 m from the illuminance meter's sensor. It is also permissible to rotate the measurement grid about the DUT. Repeat steps d) through g) for the two remaining side faces until reaching the DUT's initial position.

h) Tilt the DUT 90° down (about the X axis) and reposition the DUT, if necessary, such that the centre point of the light output is exactly 0,5 m from the illuminance meter's sensor. It is also permissible to rotate the measurement grid about the DUT.

i) Measure illuminance levels for the grid points that read a lux value greater than the resolution of the illuminance meter and greater than 0,2 % of the maximum lux reading from the first surface measured.

j) Tilt the DUT 180° up (about the X axis) and reposition the DUT, if necessary, such that the centre point of the light output is exactly 0,5 m from the illuminance meter's sensor. It is also permissible to rotate the measurement grid about the DUT.

k) Measure illuminance levels for the grid points that read a lux value greater than the resolution of the illuminance meter and greater than 0,2 % of the maximum lux reading from the first surface measured.

I.4.3.6 Calculations

The illuminance data are used to estimate the DUT's luminous flux output. The six measured sides have virtually enclosed the DUT's light output within a box. All the illuminance values over the virtual surfaces will be integrated to calculate an estimate for luminous flux.

a) Estimate the luminous flux incident on the first measured surface: multiply the illuminance values by the appropriate area each one represents (0,01 m^2 for interior points, 0,005 m^2 for edge points, and 0,0025 m^2 for corner points) to obtain the luminous flux (lm) represented by each illuminance measurement.

b) Sum the luminous flux measurements over the entire surface.

c) Repeat step a) to calculate the luminous flux for the remaining five sides.

d) Total the luminous flux estimates over all six sides to obtain an estimated constant-voltage total luminous flux emitted from the DUT.

I.5 Correlated colour temperature (CCT) measurement

Measurement of correlated colour temperature shall be made in accordance with CIE 15:2004.

I.6 Colour rendering index (CRI) measurement

Measurement of colour rendering index (R_a) shall be made in accordance to CIE 13.3 and CIE 177.

I.7 Reporting

Report the following in the light output test report.

- Metadata:
  - report name;
  - procedure(s) used;
  - DUT manufacturer;
  - DUT name;

IECNORM.COM : Click to view the full PDF of IEC TS 62257-9-5:2016 RLV
Withdrawn

  - DUT model number;
  - DUT setting;
  - test room temperature (°C);
  - name of test laboratory;
  - approving person;
  - date of report approval.
- Results for tested DUT aspects for samples 1 through n:
  - drive current (A);
  - drive voltage (V);
  - stabilisation time (min);
  - total constant-voltage luminous flux (lm);
  - correlated colour temperature;
  - colour rendering index.
- Average of n sample results for each DUT aspect tested.
- Coefficient of variation of n sample results for each DUT aspect tested (%).
- DUT's rating for aspects tested, if available.
- Deviation of the average result from the DUT's rating for each aspect tested, if available (%).
- Comments:
  - individual comments, as necessary, for samples 1 through n;
  - overall comments, as necessary, for collective set of samples 1 through n.

Withdrawn
IECNORM.COM : Click to view the full PDF of IEC TS 62257-9-5:2016 RLV

Annex J
(normative)

Lumen maintenance test

J.1 Background

An important performance metric for LED lights is consistent luminous flux over the product's lifetime. The lifetime of LEDs is strongly influenced by electrical operating conditions and thermal management. Further criteria which can accelerate degradation include the quality of the phosphor used in white LEDs, component level chip design and LED packaging materials and processes, and the environmental stability of secondary optical components in the product housing. Assuming that an overall lifetime of 5 years and a daily burn time (DBT) of 4 h are achieved, this results in a total operation time of 7 300 h.

Examination of the lumen maintenance of LED light sources and products is performed in a long-term test of either the individual LED components or the entire LED product. LED components are sometimes tested by the LED manufacturer for a minimum of 6 000 h under IESNA LM-80-08. Because of time constraints, however, it is generally not practical to measure a complete LED lighting product over its entire expected lifespan. The test methods described in this module take two different approaches to estimating lumen maintenance.

The first approach monitors a DUT's light output over a fixed period of operation in order to identify and flag products that are found to suffer significant lumen depreciation. An initial screening method is described which monitors light output for 500 h (approximately 3 weeks) as well as a longer term evaluation in which light output is monitored for 2 000 h (approximately 12 weeks).

For the 2 000 h test, a $L_{90} \geq 2\,000$ h judgment may be made at 1 000 h if all tested product samples maintain ≥ 95 % lumen maintenance (L_{95}) for the entire 1 000 h. Testing has shown that these products are very likely to have L_{70} greater than 2 000 h.

Several of the tests used to evaluate solar LED products are relatively short-term, thus allowing a single test sample to be used on several different tests. Because the lumen maintenance test requires a sample to be dedicated for such a long period of time (up to 12 weeks), test samples should be dedicated to this test until the test is completed. In cases where the battery is not required to conduct the lumen maintenance test, the DUT's battery can be used for other testing (e.g. battery durability testing).

An alternate method for estimating lumen maintenance uses an IESNA LM-80-08 (LM-80) test report from the manufacturer of the LED component. The temperature of the LED(s) in the DUT are measured and compared to the LM-80 data for the component LED(s) and an estimate is reported. The initial screening method monitoring light output for 500 h is still performed, but no further lumen maintenance tests are required. This method therefore represents a faster assessment of a product's lumen maintenance performance.

J.2 Test outcomes

The lumen maintenance test outcomes are listed in Table J.1.

IECNORM.COM : Click to view the full PDF of IEC TS 62257-9-5:2016 RLV
Withdrawn

Table J.1 – Lumen maintenance test outcomes

Metric	Reporting units	Related aspects	Notes
Lumen maintenance at 2 000 h	%	4.2.4.2 2 000 h lumen maintenance	The percentage of initial light output (time = 0 h) that the product generates at the end of the test (time = 2 000 h).
Lumen maintenance at 1 000 h	%	4.2.4.2 2 000 h lumen maintenance	The percentage of initial light output (time = 0 h) that the product generates at the mid-point of the test (time = 1 000 h); this may be used as a provisional result at the discretion of stakeholders.
Lumen maintenance at 500 h	%	4.2.4.1 500 h lumen maintenance	The percentage of initial light output (time = 0 h, after the initial 20-min warm-up period) that the product generates at the end of the test (time = 500 h).

J.3 Related tests

Annex J is not related to any of the other annexes.

J.4 Procedure

J.4.1 General

Two tests are described in J.4: a full lumen maintenance characterization in which DUTs are tested for 2 000 h and a quick screening test in which DUTs are tested for 500 h.

Similar to the full-battery run time test (Annex M), the lumen maintenance test requires an accurate measurement of relative light output over time. Measurements shall be taken in a conditioned space such that the air temperature is 24 °C ± 3 °C. There are four approved methods for making these measurements:

- Photometer tube method (J.4.2.1).
- Fixed geometry method (J.4.2.2).
- Photometer box method (J.4.2.3).
- Integrating sphere method (J.4.2.4).

J.4.2 Full screening

J.4.2.1 Photometer tube method

J.4.2.1.1 Equipment requirements

The following equipment is required. Equipment shall meet the requirements in Table CC.2.

- Photometer tube test apparatus that includes an illuminance meter (described below).
- DC power supply.
- DC voltmeter or multimeter.

J.4.2.1.2 Test prerequisites

The DUT shall have been prepared as described in Annex G.

J.4.2.1.3 Apparatus

The photometer tube is a self-made device (made from low-cost materials that are readily available in developing countries) for taking measurements of relative luminous flux. A basic rendering of a photometer tube is included in Figure J.1.

IECNORM.COM : Click to view the full PDF of IEC TS 62257-9-5:2016 RLV
Withdrawn

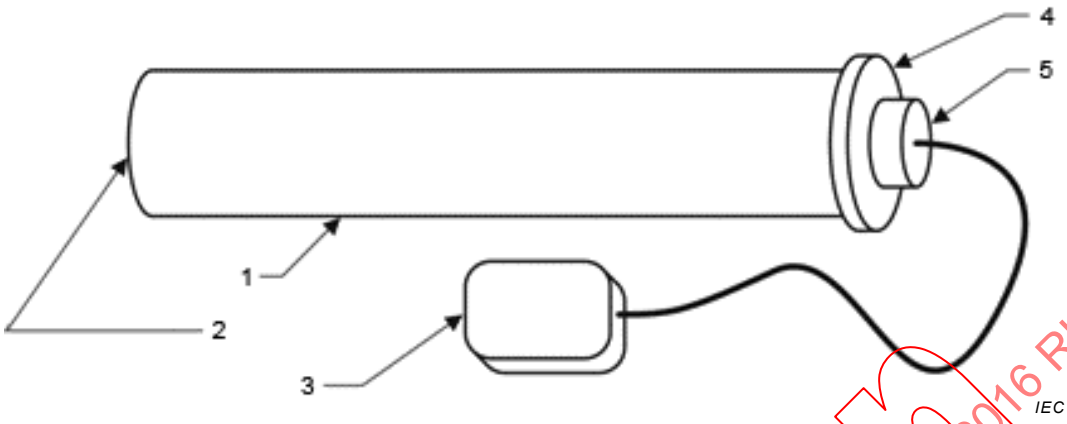

Key

1 Tube
2 Open end
3 Illuminance meter
4 End cap
5 Illuminance meter sensor

Figure J.1 – Schematic of a photometer tube

The recommended tube for this application is made of cardboard, often available free of cost from fabric or paper rolls. PVC pipe is also relatively inexpensive and appropriate for use as a photometer tube. The tube inside diameter should be between 5 cm and 7 cm. The tube should be at least 50 cm in length.

An end cap is fit snugly to one end of the tube. The end cap holds the illuminance meter sensor in a fixed position at the end of the tube and restricts stray light from entering. Due to material cost and ease of manufacture, wood is the recommended material for the end cap.

No reflective coating is necessary on the internal surface of the photometer tube.

J.4.2.1.4 Procedure

The following steps shall be followed.

a) The DUT battery is replaced by a laboratory power supply that is set to deliver the DUT's standard battery voltage or typical port voltage according to the power supply setup procedure (Annex H).

b) Light from the DUT is directed into the open end of the photometer tube.

The DUT and the photometer are both fixed to the photometer tube for the duration of the test. It is recognized that laboratories testing a large number of samples are not always able to dedicate a photometer to each sample that they are testing during the duration of the lumen maintenance test. Thus, an apparatus may be used in which the DUT or the photometer is installed just prior to the making measurements and then removed afterwards.

If such a method is utilized, great care shall be made to ensure that the photometer and the DUT are placed in precisely the same geometric arrangement for each measurement, as even slight variation in placement can generate significant measurement errors. Also, if a photometer is installed and removed from an apparatus, it is important that the same photometer is used for all measurements (i.e. do not measure some readings with meter A, and subsequent readings with meter B). Using photometers with "max" functions can facilitate replication of the original geometry (i.e. if the original reading is at the peak of the light distribution, it is possible to search for the peak using a max function).

IECNORM.COM : Click to view the full PDF of IEC TS 62257-9-5:2016 RLV
Withdrawn

For DUTs with multiple identical lighting appliances, it is only necessary to measure one of each type of identical lighting appliance; therefore, it is not necessary for all the product's lighting appliances to be running during the duration of the test.

EXAMPLE The DUT includes three different types of lighting appliances (e.g. a tube light, four ambient light points, and two more focused light points). In this case, three of the seven lighting appliances would be measured during testing – one of each lighting appliance type.

c) Care shall be taken to ensure that the DUT is secured to the photometer tube such that exactly the same alignment is maintained for each measurement. Care shall also be taken when securing the DUT to the photometer tube that the DUT does not have its thermal environment altered significantly. If airflow around the DUT is significantly reduced due to the connection to the photometer tube (i.e. if the entire DUT is placed inside the tube), the test results could show a lower lumen maintenance rate than would actually result from normal use.

d) Refer to Table J.2 for the minimum frequency at which the relative illuminance of the DUT, ambient temperature, DUT voltage, and current are measured and recorded. The voltage measurement shall be made as close to the DUT as possible.

e) (optional) A data logger or a lux meter with a data-logging function may be used to record the illuminance every hour.

Table J.2 – Lumen maintenance test minimum frequency of measurement for full screening test

Measurement number	Time interval h	Cumulative time h
1	0,33 (20 min)	0
2	24	24
3	48	72
4	48	120
5	48	168
6	48	216
7	168	384
8	168	552
9	168	720
10	168	888
(optional)	112	1 000
11	168	1 056
12	168	1 224
13	168	1 392
14	168	1 560
15	168	1 728
16	168	1 896
17	104	2 000

IECNORM.COM : Click to view the full PDF of IEC TS 62257-9-5:2016 RLV

J.4.2.1.5 Calculations

See Clause J.5.

J.4.2.2 Fixed geometry method

J.4.2.2.1 Equipment requirements

The following equipment is required. Equipment shall meet the requirements in Table CC.2.

- DC power supply.
- DC voltmeter or multimeter.
- Illuminance meter.

J.4.2.2.2 Test prerequisites

The DUT shall have been prepared as described in Annex G.

J.4.2.2.3 Apparatus

The apparatus for the method is simply any dedicated space in which the DUT and the photometer are secured so they do not move relative to one another during testing and so no outside light is received. This could be a dedicated area in a "dark room" in which the photosensor and DUT are secured, or other similar setup.

J.4.2.2.4 Procedure

The following steps shall be followed.

a) Supply power to the lighting appliance according to I.4.1. The DUT and the photometer are both placed in a fixed locations relative to one another for the duration of the test. Care shall be taken to ensure that the DUT and the photometer are secured such that exactly the same alignment is maintained for each measurement. Care shall also be taken such that no stray light (i.e. ambient light, light from other test samples, etc.) is able to reach the light sensor.

   For DUTs with multiple identical lighting appliances, it is only necessary to measure one of each type of identical lighting appliance; therefore, it is not necessary for all the product's lighting appliances to be running during the duration of the test.

   EXAMPLE The DUT includes three different types of lighting appliances (e.g. a tube light, four ambient light points, and two more focused light points). In this case, three of the seven lighting appliances would be measured during testing – one of each lighting appliance type.

   The test lab shall determine the best way to test multiple lighting appliances. In some cases, it is possible to test all of the lighting appliances together (for example, the lighting appliances are small and can be placed and tested together inside the test enclosure). In other cases, the lighting appliances should be tested individually (for example, one lighting appliance is placed inside the test enclosure and the others are powered on but left outside the enclosure during the test).

b) Refer to Table J.2 for the minimum frequency at which the relative illuminance of the DUT, ambient temperature, DUT voltage, and current are measured and recorded. The voltage measurement shall be made as close to the DUT as possible.

c) A data logger or a lux meter with a data-logging function may be used to record the illuminance every hour.

J.4.2.2.5 Calculations

See Clause J.5.

J.4.2.3 Photometer box method

J.4.2.3.1 Equipment requirements

The following equipment is required. Equipment shall meet the requirements in Table CC.2.

- Photometer box that includes an illuminance meter.
- DC power supply.
- DC voltmeter or multimeter.

IECNORM.COM : Click to view the full PDF of IEC TS 62257-9-5:2016 RLV
Withdrawn

J.4.2.3.2 Test prerequisites

The DUT shall have been prepared as described in Annex G.

J.4.2.3.3 Apparatus

The apparatus for the method is a photometer box, as described in the full-battery run time test (Annex M).

J.4.2.3.4 Procedure

The following steps shall be followed.

a) Supply power to the lighting appliance according to I.4.1.

b) The relative illuminance is measured using the photometer box.

c) The location of the DUT in the photometer box shall be accurately noted to ensure exact replication of alignment and orientation for each measurement. A printed photograph of the DUT placement within the box is a useful reference (Figure J.1). Alignment marks may also be used to ensure repeatability.

For DUTs with multiple identical lighting appliances, it is only necessary to measure one of each type of identical lighting appliance; therefore, it is not necessary for all the product's lighting appliances to be running during the duration of the test.

EXAMPLE The DUT includes three different types of lighting appliances (e.g. a tube light, four ambient light points, and two more focused light points. In this case, three of the seven lighting appliances would be measured during testing – one of each lighting appliance type.

The test lab shall determine the best way to test multiple lighting appliances. In some cases, it is possible to test all of the lighting appliances together (for example, the lighting appliances are small and can be placed and tested together inside the test enclosure). In other cases, the lighting appliances should be tested individually (for example, one lighting appliance is placed inside the test enclosure and the others are powered on but left outside the enclosure during the test).

d) For the following measurements, the DUT shall be placed in the photometer box with exactly the same alignment and orientation.

e) Refer to Table J.2 for the minimum frequency at which the relative illuminance of the DUT, ambient temperature, DUT voltage, and current are measured and recorded. The voltage measurement shall be made as close to the DUT as possible.

f) In the case that the DUT remains in the box throughout the duration of the test, a data logger or a lux meter with a data-logging function may be used to record the illuminance every hour.

J.4.2.3.5 Calculations

See Clause J.5.

J.4.2.4 Integrating sphere method

J.4.2.4.1 Equipment requirements

The following equipment is required. Equipment shall meet the requirements in Table CC.2.

- Integrating sphere.
- DC voltmeter or multimeter.
- DC ammeter.

J.4.2.4.2 Test prerequisites

The DUT shall have been prepared as described in Annex G.

IECNORM.COM : Click to view the full PDF of IEC TS 62257-9-5:2016 RLV
Withdrawn

J.4.2.4.3 Apparatus

Integrating sphere.

J.4.2.4.4 Procedure

The following steps shall be followed.

a) Supply power to the lighting appliance according to I.4.1.

b) The luminous flux is measured using an integrating sphere system.

For DUTs with multiple identical lighting appliances, it is only necessary to measure one of each type of identical lighting appliances; therefore, not all the product's lighting appliance need to be running during the duration of the test.

EXAMPLE The DUT includes three different types of lighting appliances (e.g. a tube light, four ambient light points, and two more focused light points). In this case, three of the seven lighting appliances would be measured during testing – one of each lighting appliance type.

The test lab shall determine the best way to test multiple lighting appliances. In some cases, it is possible to test all of the lighting appliances together (for example, the lighting appliances are small and can be placed and tested together inside an integrating sphere). In other cases, the lighting appliances should be tested individually (for example, one lighting appliance is placed inside an integrating sphere and the others are powered on but left outside the sphere during the test).

c) Refer to Table J.2 for the minimum frequency at which the luminous flux of the DUT, ambient temperature, DUT voltage, and current are measured and recorded. The voltage measurement shall be made as close to the DUT as possible.

J.4.2.4.5 Calculations

See Clause J.5.

J.4.3 Initial screening (500 h test)

The lumen maintenance initial screening test is identical to the full screening test with the exception of the test duration, which is reduced from 2 000 h to 500 h. All four of the methods described above for the full screening test (photometer tube, fixed geometry, photometer box, and integrating sphere) may be used for the initial screening test. Table J.3 shall be used for minimum testing duration.

Table J.3 – Lumen maintenance test minimum frequency of measurement for Initial screening test

Measurement number	Time interval h	Cumulative time h
1	0,33 (20 min)	0
2	24	24
3	48	72
4	48	120
5	48	168
6	48	216
7	168	384
8	116	500

IECNORM.COM : Click to view the full PDF of IEC TS 62257-9-5:2016 RLV

J.5 Calculations

Lumen maintenance is calculated by dividing the final light output reading by the initial light output reading. Lumen maintenance is always reported along with the test duration.

If the light output of the DUT ever drops below 85 % of the initial reading, then operating hours at which this occurs should be reported as L_{85}.

EXAMPLE If the initial reading was 1 000 lx, and readings dropped to 850 lx after 850 h, then L_{85} = 850 h.

If the light output of the DUT at the end of the 2 000 hour test is greater than 85 % of the initial reading, the L_{85} rating will then be $L_{85} > 2\,000$ h.

J.6 Alternate method for testing lumen maintenance using IESNA LM-80-08

J.6.1 Background

The lumen maintenance of an LED or LED array contained in a lighting product can be estimated by measuring the LED case temperature(s) (T_C). This measurement is compared to IESNA LM-80-08 data (minimum 6 000 h) from the LED manufacturer to estimate the DUT's lumen maintenance at 2 000 h.

The LED case temperature (T_C) measurement location, also sometimes referred to as the LED temperature measurement point (TMP), is established by the LED manufacture. T_C is related to the temperature of the LED die and is measured by attaching a thermocouple as close to the LED component as possible on a printed circuit board pad adjacent to the LED. This measurement location may be one of the LED lead pads or may be a separate, electrically neutral pad on the printed circuit board configured as a heat sink for the LED. The LED manufacturer will have information on the correct TMP for the LED that was used during the LM-80-08 tests. The DUT manufacturer shall provide a TMP for the LEDs in the product that matches the T_C measurement location used for the LM-80 tests. This is often done by using the same printed circuit board pad configuration that was used for the LM-80 tests in the design of the DUT.

This LED temperature procedure tests the instantaneous LED temperature during normal operation to make an LED lumen maintenance assessment. It does not test longer duration operation of the LED or LED drive circuitry. To assess the ability of the DUT electronics to drive the LED(s) over a longer time period, a 500 h initial screening test shall also be performed as described in J.4.3.

J.6.2 Test prerequisites

This test shall not be performed unless *all* of the following criteria are met.

- The DUT manufacturer has supplied the DUT LED component specification(s), including the complete component number and the LED specification document from the LED manufacturer.
- The DUT manufacturer has supplied IESNA LM-80-08 (LM-80) test data for the LED(s) used in the lighting product. LM-80 testing is typically done by the LED manufacturer. The laboratory performing the LM-80 test shall be accredited to do this type of testing.
- The DUT manufacturer has supplied an LED RMS drive current measurement at the product's highest light setting.
- The LM-80 test data includes an LED case temperature (T_C) and LED drive current higher than the DUT's LED case temperature and drive current.
- The DUT is designed in such a way as to allow temperature measurement of the LED T_C as specified by the LED manufacturer.

IECNORM.COM : Click to view the full PDF of IEC TS 62257-9-5:2016 RLV
Withdrawn

- The DUT manufacturer has provided instructions and diagrams showing the appropriate attachment point for thermocouples used during the test.

J.6.3 Procedure

Perform the following procedure.

a) Review documentation supplied by the DUT manufacturer to confirm that the DUT qualifies for testing using this method.

b) Prepare the DUT for LED testing as outlined in J.6.4 below.

c) Attach thermocouples to one or more LED(s) as outlined in J.6.4 below.

d) Reassemble the product and orient in its normal operating position. The DUT shall be operated in a 25 °C ± 2 °C still air environment free from drafts, fans, and other air currents that could produce forced air convective currents and contribute to the cooling of the product.

e) Supply power to the lighting appliance according to I.4.1.

f) Allow the product to thermally stabilize for a minimum of 1 h. The LED case temperatures should be monitored to confirm thermal stabilization.

g) Record the LED case temperature (T_C).

h) Prepare the DUT for initial screening and perform a 500 h test as described in J.4.3.

J.6.4 DUT preparation and LED thermocouple attachment guidelines

The LED(s) in the DUT shall be accessed to allow the attachment of thermocouple wires. When opening the DUT optical housing to access the LED(s), the normal operating environment shall be preserved to the maximum degree possible. Holes drilled into compartments should be as small as possible and covered with tape to prevent additional air movement during operation. The T_C location of the LED(s) shall be accessible to allow thermocouple attachment without disturbing the normal operation of the array.

Small gauge Type T thermocouples (wire diameter ≤ 0,13 mm) are recommended and can be readily soldered to copper circuit board pads. Other thermocouples are acceptable but require the appropriate soldering flux and can be difficult to solder. The thermocouple attachment, including any additional solder or epoxy, shall be as small as possible to prevent an additional heat conduction pathway that could artificially contribute to the heat sinking of the LED component. LED(s) with large thermal pads or heat sinks can require preheating to facilitate soldering the thermocouple to the TMP or T_C measurement location.

A thermocouple shall be attached to an LED's temperature measurement point by soldering or gluing using a thermally conductive adhesive/epoxy. The attachment method shall ensure adequate thermal contact between the thermocouple and the TMP. Thermocouple wire should be routed away from direct illumination by the LED(s) and/or should be shielded from direct light to prevent artificial heating of the wire. This can usually be accomplished with white tape or white heat-shrink tubing. Tape or tubing should not cover the LED in a way that could increase the self-heating of the LED component.

When testing a DUT with multiple LEDs in an LED array, the test lab shall attempt to identify the LED in the array that will experience the highest temperature in operation. In practice, this is often an LED located in the centre of the array. Measurements on multiple LEDs in an array may be warranted to adequately identify the T_C value used for an LM-80 assessment.

J.6.5 Calculations

The LM-80 test report for the DUT LED will contain lumen maintenance data for LED temperature measurements at 55 °C, 85 °C, and one additional temperature chosen by the LED manufacturer. These measurements are performed for a minimum duration of 6 000 h and will therefore contain test data at 2 000 h.

IECNORM.COM : Click to view the full PDF of IEC TS 62257-9-5:2016 RLV
Withdrawn

The test lab shall compare the LM-80 data and T_C to estimate the lumen maintenance of the product. The test lab shall use the nearest LM-80 data point above the duration (> 2 000 h), DUT T_C , and LED drive current.

EXAMPLE If the DUT T_C is measured at 65 °C, LM-80 data at 85 °C (or greater than 65 °C when available) would be used. If the DUT LED drive current is 65 mA, the LM-80 data would be at drive currents greater than 65 mA.

The test lab shall report the lumen maintenance of the DUT as the lumen maintenance measured by the nearest (higher conditions for T_C and drive current) LM-80 test data as specified above.

J.7 Reporting

Report the following in the lumen maintenance test report.

- Metadata:
  - report name;
  - procedure(s) used;
  - DUT manufacturer;
  - DUT name;
  - DUT model number;
  - DUT setting;
  - test room temperature (°C);
  - name of test laboratory;
  - approving person;
  - date of report approval.
- Results for tested DUT aspects for samples 1 through n:
  - drive current (A);
  - drive voltage (V);
  - stabilisation time (min);
  - lumen maintenance (note if at 500 h, 1 000 h, or 2 000 h) (%);
  - L_{85} (the cumulative time at which the light output of the DUT first drops below 85 % of the initial reading) (h).
- Average of n sample results for each lumen maintenance and L_{85} DUT aspect tested.
- Coefficient of variation of n sample results for each lumen maintenance and L_{85} DUT aspect tested (%).
- DUT's rating for lumen maintenance and L_{85} aspects tested, if available.
- Deviation of the average result from the DUT's rating for each lumen maintenance and L_{85} aspect tested, if available (%).
- Comments:
  - individual comments, as necessary, for samples 1 through n;
  - overall comments, as necessary, for collective set of samples 1 through n.
- Figures:
  - plot of lumen maintenance (see example in Figure J.2).
- Datasets:
  - table with all illuminance or flux, ambient temperature, DUT voltage, and current measurements.

IECNORM.COM : Click to view the full PDF of IEC TS 62257-9-5:2016 RLV
Withdrawn

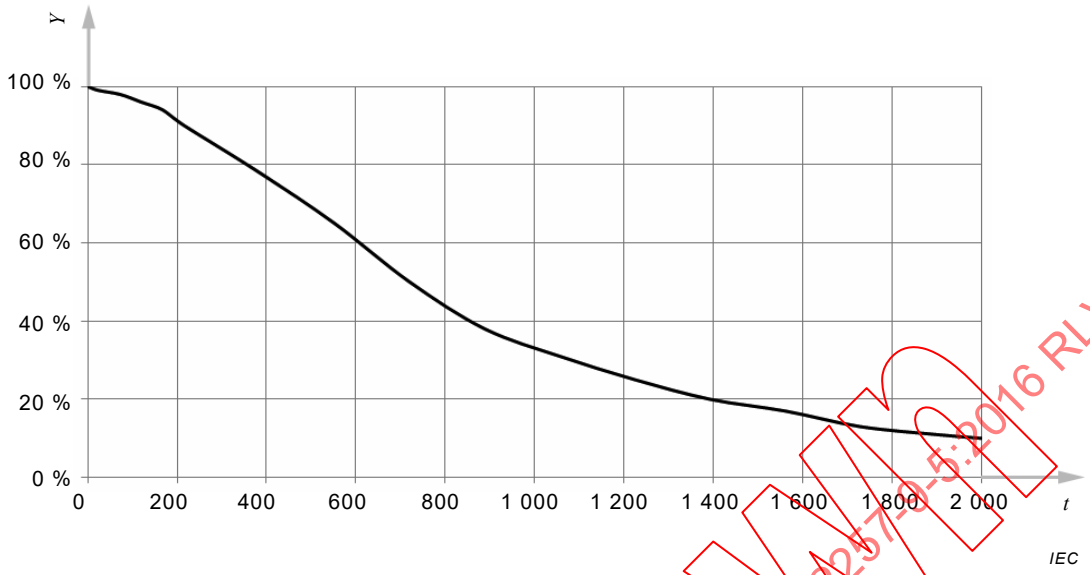

Key

t Time (h)

Y Relative luminous flux

Figure J.2 – Example lumen maintenance plot

Withdrawn
IECNORM.COM : Click to view the full PDF of IEC TS 62257-9-5:2016 RLV

Annex K
(normative)

Battery test

K.1 Background

The battery test is used to determine a DUT's actual battery capacity and round-trip energy efficiency. This information is useful to determine if a battery is mislabelled or damaged. During the test, the battery is connected to a battery analyser, which performs charge-discharge cycles on the battery. The last charge-discharge cycle data from the battery test is analysed to determine the actual battery capacity and battery round-trip energy efficiency.

K.2 Test outcomes

The test outcomes of the battery test are listed in Table K.1.

Table K.1 – Battery test outcomes

Metric	Reporting units	Related aspects	Note
Battery capacity (C_b)	Milliampere-hours (mAh) at a specific discharge current	4.2.5.1 Battery capacity	--
Battery round-trip energy efficiency (η_b)	Percentage (%)	4.2.5.2 Battery round-trip energy efficiency	At least two complete charge-discharge cycles are required for the calculation.

K.3 Related tests

The battery test results are inputs to the full-discharge preparation procedure (Annex N), the solar charge test (Annex R), the battery durability test (Annex BB), and the energy service calculations (Annex GG).

K.4 Procedure

K.4.1 General

Table K.2 contains battery testing information specific to the five common types (i.e. chemistries) of batteries. This information is pertinent to K.4.2.4, K.4.3.4, K.4.4.4, and K.4.5.4.

New or improved battery technologies could have emerged for which Table K.2 does not contain information. The test lab should sufficiently research the new or improved battery technology to determine appropriate recommended battery practices for that new or improved battery technology. Communication directly with the supplier of the DUT's battery is recommended. For example, if the battery under test is a lithium battery but is not the lithium ion (3,7 V nominal voltage) or lithium iron phosphate chemistry, alternative charging and discharging rates and end-of-cycle voltage parameters should be obtained, preferably from the battery supplier.

IECNORM.COM : Click to view the full PDF of IEC TS 62257-9-5:2016 RLV
Withdrawn

Table K.2 – Recommended battery testing specifications according to battery chemistry

Battery type	Charging				Discharging	
	Charge rate I_t A	Maximum charge voltage V/cell[a]	End-of-charge/ topping charge rate I_t A	End-of-charge time with constant voltage h[b]	Discharge rate I_t A	End-of-discharge voltage V/cell
Valve-regulated lead-acid	0,1	2,40	0,05	10	0,1	1,80
Lithium-ion	0,2	4,20	0,05	1	0,2	3,00
Lithium iron phosphate	0,2	3,60	0,01	1	0,2	2,50

Battery type	Charging				Discharging	
	Charge rate I_t A	Negative slope mV/cell	Overcharge (charge factor)[c]	Partial charge duration h[d]	Discharge rate I_t A	End-of-discharge voltage V/cell
Nickel-metal hydride	0,1	8,00	1,6	9	0,2	1,00
Nickel-cadmium	0,1	8,00	1,6	9	0,2	1,00

[a] For safety, never exceed the battery supplier's specified maximum allowable voltage.

[b] After a battery is charged to a specified voltage, it may be topped off using the recommended end-of-charge/ topping charge rate, or alternatively the battery may be topped off by supplying a constant voltage (the maximum charge voltage) over the recommended end-or-charge time.

[c] Some battery analysers are not equipped to end a charge based on the negative slope method. To ensure the battery is fully charged, an alternative option is to overcharge the battery.

[d] This value is used for measuring the battery efficiency only.

K.4.2 Valve-regulated lead-acid battery test

K.4.2.1 General

The DUT's valve-regulated lead-acid battery is cycled on a battery analyser, and the data from the final charge-discharge cycle is used to determine the DUT's actual battery capacity and round-trip energy efficiency.

K.4.2.2 Equipment requirements

A battery analyser meeting the requirements in Table CC.2 is required.

A DC power supply is needed in some cases, depending on the battery tested and the battery analyser in use.

K.4.2.3 Test prerequisites

The battery may be taken out of the DUT for this test, if desired. The DUT shall have been prepared as described in Annex G. The test shall be carried out at 20 °C ± 5 °C.

K.4.2.4 Procedure

Perform the capacity test from IEC 61427-1:2013, 8.1 (which references IEC 61056-1), with the following modifications.

- Perform a minimum of five charge-discharge cycles to ensure that the battery is sufficiently exercised prior to determining capacity and to ensure that enough data are

IECNORM.COM : Click to view the full PDF of IEC TS 62257-9-5:2016 RLV
Withdrawn

available to calculate round-trip energy efficiency. Use the final charge-discharge cycle to calculate the battery's actual capacity and round-trip energy efficiency.

- Carry out the test at 20 °C ± 5 K.
- The battery shall be kept at open circuit for 1 h to 24 h after charging before starting each discharge. (It is not necessary to wait 5 h as required by IEC 60156-1.)
- Equipment need not meet the accuracy requirements of IEC 61427-1:2013 or IEC 61056-1, provided that it meets the requirements of Table CC.2.
- Record the current at an interval of 1 min or less.

If the battery contains internal circuitry (refer to F.4.3.5) and either the battery analyser will not start the test or the tester decides that the results from the test are unexpected or faulty in some way, the test may be repeated with the battery analyser connected on the battery side of the internal circuitry, if the test laboratory determines that it is safe to do so.

If the battery will be stored after undergoing this test, charge the battery using the charge information in Table K.2 and disconnect the battery from the DUT. Charge the battery every six months, or every three months if stored at a temperature greater than 30 °C.

If the battery analyser does not recognize the battery upon starting any of the above steps, the battery voltage could have dropped below the battery analyser's minimum threshold. If this is the case, a power supply shall be used to charge the battery in accordance with IEC 61427-1:2013 before the DUT's battery capacity is determined.

K.4.2.5 Calculations

Perform the following calculations.

a) Determine the total energy input into the DUT's battery during the final charge cycle (E_c) using the following formula:

$$E_c = \sum \left(V_c \cdot I_c \cdot \Delta t \right)$$

where

E_c is the energy entering the battery during the charge cycle, in watt·hours (Wh);

V_c is the voltage recorded during the charge cycle, in volts (V);

I_c is the current recorded during the charge cycle, in amperes (A);

Δt is the time interval between measurements, in hours (h).

b) Determine the total energy output from the DUT's battery during the final discharge cycle using the following formula:

$$E_d = \sum \left(V_d \cdot I_d \cdot \Delta t \right)$$

where

E_d is the battery's energy output during the discharge cycle, in watt·hours (Wh);

V_d is the voltage recorded during the discharge cycle, in volts (V);

I_d is the current recorded during the discharge cycle, in amperes (A);

Δt is the time interval between measurements, in hours (h).

c) Determine the DUT's battery capacity with data from the final discharge cycle using the following formula:

$$C = \sum \left(I_d \cdot \Delta t \right)$$

where

C is the measured battery capacity, in ampere-hours (Ah);

IECNORM.COM : Click to view the full PDF of IEC TS 62257-9-5:2016 RLV
Withdrawn

I_d is the current recorded during the discharge cycle, in amperes (A);

Δt is the time interval between measurements, in hours (h).

d) Correct the capacity to the reference temperature of 25 °C using the following formula (from IEC 60896-21), with λ set to 0,006 K^{-1}:

$$C_a = C / \left(1 + \lambda \left(T - 25\ °C\right)\right)$$

where

C_a is the actual battery capacity, in ampere-hours (Ah);

C is the measured battery capacity, in amperes (A);

λ is 0,006 K^{-1}.

T is the battery temperature at the start of the final discharge cycle, in degrees Celsius (°C).

e) Determine the DUT's battery round-trip energy efficiency using the following formula:

$$\eta_b = \frac{E_d}{E_c}$$

where

η_b is the battery's round-trip energy efficiency;

E_d is the battery's energy output during the final discharge cycle, in watt·hours (Wh);

E_c is the energy input to the battery during the final charge cycle, in watt·hours (Wh).

Report the actual capacity (i.e. the value that has been corrected to 25 °C).

K.4.3 Nickel-metal hydride battery test

K.4.3.1 General

The DUT's nickel-metal hydride battery is cycled on a battery analyser, and the data from the final charge-discharge cycle is used to determine the DUT's actual battery capacity and battery round-trip energy efficiency.

The nickel-metal hydride battery test procedure refers to the following charging methods.

- Negative slope charging method: the battery is charged until the voltage decreases from its maximum value by the amount given in Table K.2.
- Overcharge charging method: the battery is charged at constant current for a fixed duration given by the following formula:

$$T_c = OC \cdot \frac{C_b}{I_c}$$

where

T_c is the duration of the charge cycle, in hours (h);

OC is the overcharge (charge factor) value given in Table K.2;

C_b is the measured or rated battery capacity, in milliampere-hours (mAh);

I_c is the charge current, in milliamperes (mA);

K.4.3.2 Equipment requirements

A battery analyser meeting the requirements in Table CC.2.

IECNORM.COM : Click to view the full PDF of IEC TS 62257-9-5:2016 RLV
Withdrawn

K.4.3.3 Test prerequisites

The battery may be taken out of the DUT for this test, if desired. The DUT shall have been prepared as described in Annex G. The test shall be carried out at 20 °C ± 5 °C. As specified in IEC 61951-2:2011, the test shall be carried out at a relative humidity of 65 % ± 20 %.

K.4.3.4 Procedure

Perform the capacity test from IEC 61951-2:2011, 7.2, with the following modifications.

- Perform a minimum of five charge-discharge cycles to ensure that the battery is sufficiently exercised prior to determining capacity and to ensure that enough data are available to calculate round-trip energy efficiency. Use the final charge-discharge cycle to calculate the battery's actual capacity and round-trip energy efficiency.
- Record the current at an interval of 1 min or less.

If the battery contains internal circuitry (refer to F.4.3.5) and either the battery analyser will not start the test or the tester decides that the results from the test are unexpected or faulty in some way, the test may be repeated with the battery analyser connected on the battery side of the internal circuitry, if the test laboratory determines that it is safe to do so.

If the battery analyser does not recognize the battery upon starting any of the above steps, the battery output could have dropped to 0 V. If this is the case, a constant-current charge as specified in Table K.2 of Annex K from a power supply may be used to bring the battery out of a 0 V state of charge before the DUT's battery capacity is determined.

Nickel-based batteries need not be charged prior to storage; however, batteries should be disconnected from the DUT prior to long-term storage to avoid polarity reversal. It is often convenient to end the battery test with a charge to allow for further testing.

K.4.3.5 Calculations

Perform the following calculations.

a) Determine the total energy input into the DUT's battery during the final charge cycle (E_c) using the following formula:

$$E_c = \sum \left(V_c \cdot I_c \cdot \Delta t \right)$$

where

E_c is the energy entering the battery during the charge cycle, in watt·hours (Wh);

V_c is the voltage recorded during the charge cycle, in volts (V);

I_c is the current recorded during the charge cycle, in amperes (A);

Δt is the time interval between subsequent data points, in hours (h).

b) Determine the total energy output from the DUT's battery during the final discharge cycle using the following formula:

$$E_d = \sum \left(V_d \cdot I_d \cdot \Delta t \right)$$

where

E_d is the battery's energy output during the discharge cycle, in watt·hours (Wh);

V_d is the voltage recorded during the discharge cycle, in volts (V);

I_d is the current recorded during the discharge cycle, in amperes (A);

Δt is the time interval between subsequent data points, in hours (h).

c) Determine the DUT's battery capacity with data from the final discharge cycle using the following formula:

IECNORM.COM : Click to view the full PDF of IEC TS 62257-9-5:2016 RLV
Withdrawn

$$C_b = \sum \left(I_d \cdot \Delta t \right)$$

where

C_b is the measured battery capacity, in milliampere-hours (mAh);

I_d is the current recorded during the discharge cycle, in milliamperes (mA);

Δt is the time interval between subsequent current data, in hours (h).

d) Determine the DUT's battery efficiency using the following formula:

$$\eta_b = \frac{E_d}{E_c}$$

where

η_b is the battery round-trip energy efficiency;

E_d is the battery's energy output during the discharge cycle, in watt hours (Wh);

E_c is the energy input to the battery during the charge cycle, in watt hours (Wh).

K.4.4 Lithium-ion battery test

K.4.4.1 General

The DUT's lithium-ion battery is cycled on a battery analyser, and the data from the final charge-discharge cycle is used to determine the DUT's actual battery capacity and battery round-trip energy efficiency.

K.4.4.2 Equipment requirements

A battery analyser meeting the requirements in Table CC.2 is required.

For battery packs containing more than one cell in series, a protection circuit that monitors the voltage of each cell (or each set of cells connected in parallel) shall be used during charging, if this functionality is not incorporated into the battery pack. This functionality may be built into the battery analyser or may be a separate piece of equipment. The voltage of each individual cell (or each set of cells connected in parallel) should not be allowed to exceed the maximum battery testing voltage given in Table L.2 unless manufacturer-provided battery specifications indicate that such operation can be performed safely. The temperature of each individual cell should not be allowed to exceed 45 °C. Care should be taken that any voltage drop introduced by the protection circuit (e.g. relay contact resistance) does not affect the results.

The use of a battery protection circuit other than the one incorporated into the DUT can affect the usable capacity of the battery. In cases where the test results are disputed for this reason, the battery capacity may also be evaluated by disassembling the battery pack and performing the test on a single cell (or set of cells connected in parallel). The cell or parallel grouping of cells should be selected at random for each DUT. The capacity of the entire pack may be assumed to be equal to the capacity of the selected cell or parallel grouping of cells. If the battery under test is to be used for further testing, care should be taken to return all cells of the battery to a balanced state of charge prior to further testing, e.g. by fully discharging or charging the cells under test to match the rest of the battery pack's state of charge.

K.4.4.3 Test prerequisites

The battery may be taken out of the DUT for this test, if desired. The DUT shall have been prepared as described in Annex G. The test shall be carried out at 20 °C ± 5 °C. As specified in IEC 61960:2011, the test shall be carried out in still air.

K.4.4.4 Procedure

Perform the capacity test from IEC 61960:2011, 7.3.1, with the following modifications.

IECNORM.COM : Click to view the full PDF of IEC TS 62257-9-5:2016 RLV
Withdrawn

- Perform a minimum of five charge-discharge cycles to ensure that the battery is sufficiently exercised prior to determining capacity and to ensure that enough data are available to calculate round-trip energy efficiency. Use the final charge-discharge cycle to calculate the battery's actual capacity and round-trip energy efficiency.
- Charge and discharge the battery using the information in Table K.2 – calculated using the battery's rated capacity.
- Record the current at an interval of 1 min or less.

If the battery contains internal circuitry (refer to F.4.3.5) and either the battery analyser will not start the test or the tester decides that the results from the test are unexpected or faulty in some way, the test may be repeated with the battery analyser connected on the battery side of the internal circuitry, if the test laboratory determines that it is safe to do so.

If the battery will be stored after undergoing this test, charge the battery using the charge rate specified in Table K.2 for 2,5 h (i.e., store at 50 % state of charge) and disconnect the battery from the DUT.

If the battery analyser does not recognize the battery upon starting any of the above steps, the battery could have been disconnected by its internal protection circuit. In this case, the voltage at the battery terminals will be zero, which can prevent the battery analyser from recognizing the battery. In this situation, a current-limited constant-voltage charge, at a current no higher than that specified in Table K.2 of Annex K from a power supply may be required to re-enable the battery before the DUT's battery capacity is determined. If the cell voltage has decreased below 2,5 V for lithium iron phosphate or 3,0 V for other lithium-ion, perform the charge at 0,1 I_t A. The voltage shall not exceed the value given in Table K.2. It is recommended to set the power supply to the lowest possible voltage that will allow the battery analyser to recognize the battery and complete the charge cycle. If the battery is suspected to be damaged, it should not be charged using this method. It can be necessary to bypass the battery's internal protection circuit to perform this step; in this case, the cell voltage should be measured prior to charging the battery to ensure that it has not dropped below the minimum battery testing voltage given in Table L.1. If the battery voltage has dropped below the minimum battery testing voltage, charging the battery can be unsafe; the test laboratory should discontinue the test if in the tester's discretion it would be unsafe to continue.

K.4.4.5 Calculations

Perform the same calculations listed in K.4.3.5.

K.4.5 Lithium iron phosphate battery test

K.4.5.1 General

The DUT's lithium iron phosphate battery is cycled on a battery analyser, and the data from the final charge-discharge cycle is used to determine the DUT's actual battery capacity and battery round-trip energy efficiency.

K.4.5.2 Equipment requirements

A battery analyser meeting the requirements in Table CC.2 is required.

For battery packs containing more than one cell in series, a protection circuit that monitors the voltage of each cell (or each set of cells connected in parallel) shall be used during charging, if this functionality is not incorporated into the battery pack. This functionality may be built into the battery analyser or may be a separate piece of equipment. The voltage of each individual cell (or each set of cells connected in parallel) should not be allowed to exceed the maximum battery testing voltage given in Table L.2 unless manufacturer-provided battery specifications indicate that such operation can be performed safely. The temperature of each individual cell should not be allowed to exceed 45 °C. Care should be taken that any voltage drop introduced by the protection circuit (e.g. relay contact resistance) does not affect the results.

IECNORM.COM : Click to view the full PDF of IEC TS 62257-9-5:2016 RLV
Withdrawn

The use of a battery protection circuit other than the one incorporated into the DUT can affect the usable capacity of the battery. In cases where the test results are disputed for this reason, the battery capacity may also be evaluated by disassembling the battery pack and performing the test on a single cell (or set of cells connected in parallel). The cell or parallel grouping of cells should be selected at random for each DUT. The capacity of the entire pack may be assumed to be equal to the capacity of the selected cell or parallel grouping of cells. If the battery under test is to be used for further testing, care should be taken to return all cells of the battery to a balanced state of charge prior to further testing, e.g. by fully discharging or charging the cells under test to match the rest of the battery pack's state of charge.

K.4.5.3 Test prerequisites

The battery may be taken out of the DUT for this test, if desired. The DUT shall have been prepared as described in Annex G. The test shall be carried out at 20 °C ± 5 °C. As specified in IEC 61960:2011, the test shall be carried out in still air.

K.4.5.4 Procedure

Follow the procedure in K.4.4.4.

K.4.5.5 Calculations

Perform the same calculations listed in K.4.3.5.

K.5 Reporting

Report the following in the battery test report.

- Metadata:
  - report name
  - procedure(s) used
  - DUT manufacturer
  - DUT name
  - DUT model number
  - name of test laboratory
  - approving person
  - date of report approval
- Results for tested DUT aspects for samples 1 through n:
  - battery capacity (Ah) and corresponding discharge current (in terms of I_t A);
  - battery round-trip energy efficiency (%).
- Average of n sample results for each DUT aspect tested.
- Coefficient of variation of n sample results for each DUT aspect tested (%).
- DUT's rating for aspects tested, if available.
- Deviation of the average result from the DUT's rating for each aspect tested, if available (%).
- Comments:
  - individual comments, as necessary, for samples 1 through n;
  - overall comments, as necessary, for collective set of samples 1 through n.

IECNORM.COM : Click to view the full PDF of IEC TS 62257-9-5:2016 RLV
Withdrawn

Annex L
(informative)

Battery testing recommended practices

L.1 Background

Several tests in this part of IEC 62257 involve charging or discharging a battery:

- During the charge controller behaviour test (Annex S), the DUT's battery is either charged or discharged to determine if the DUT has appropriate deep discharge protection and overcharge protection.
- During the grid charge test (Annex O), solar charge test (Annex R), and electromechanical charge test (Annex P), the DUT's battery is charged.
- During the full-battery run time test (Annex M), the DUT's battery is discharged.

In some cases, it is not known whether the DUT provides sufficient protection to avoid damage to the battery or test apparatus or injury to test laboratory personnel. Annex L provides recommended charging and discharging practices to prevent damage to the DUT and ensure safety of test personnel.

A variety of battery chemistry types are used in products meeting the scope of this part of IEC 62257, potentially including types that were not in common use at the date of publication. The information in Table L.1 and Table L.2 is intended to prevent damage to the DUT and test apparatus and ensure safety of test personnel for most common battery types. When possible, battery specifications should be obtained from the battery manufacturer to evaluate whether the protection strategy used by the DUT is appropriate for the specific battery used.

L.2 Deep discharge protection specifications by battery type

Table L.1 contains recommended battery deep discharge protection voltages and minimum battery voltages for four common types (i.e. chemistries) of batteries. If the product or battery manufacturer has not provided an appropriate deep discharge protection voltage cutoff design value for the battery in the manufacturer self-reported information (Annex D), the information in Table L.1 may be used when determining if the DUT has appropriate deep discharge protection.

Table L.1 contains two voltage values for each battery type. The "recommended deep discharge protection voltage" is the recommended setpoint for the DUT's deep discharge protection (low voltage disconnect). The tolerance given is intended to account for measurement uncertainty both in the DUT and in the laboratory apparatus. The "minimum battery testing voltage" is intended to ensure laboratory personnel safety and prevent immediate, permanent damage to the battery. The test laboratory should immediately stop charging a battery if the battery voltage reaches the minimum testing voltage.

If the DUT does not have appropriate deep discharge protection, the DUT's battery can be damaged during the full-battery run time and the charge controller behaviour tests. As an option, the tester may incorporate a low-voltage disconnect device that will stop a DUT's discharge when the DUT's battery reaches the minimum battery testing voltage specified in Table L.1.

IECNORM.COM : Click to view the full PDF of IEC TS 62257-9-5:2016 RLV
Withdrawn

Table L.1 – Recommended battery deep discharge protection voltage specifications according to battery chemistry

Battery type	Deep discharge protection voltage V/cell			Minimum battery testing voltage V/cell
	Recommended	Minimum	Maximum	
Valve-regulated lead-acid	≥ 1,87	1,82	--	none
Lithium-ion	≥ 3,00	2,95	--	2,50
Lithium iron phosphate	≥ 2,50	2,45	--	2,00
Nickel-metal hydride	= 1,00	0,95	1,10 [a]	0,80 [b]

[a] These limits for NiMH batteries only apply to batteries with multiple cells in series. There is no personnel safety risk from discharging batteries below this limit, but there is a risk of polarity reversal, which can cause irreversible damage to the battery. There is no lower voltage limit for single-cell NiMH batteries.

[b] The intent of this upper limit is to prevent reversible capacity loss due to voltage depression ("memory effect") resulting from partial discharge.

L.3 Overcharge protection specifications by battery type

Table L.2 contains recommended battery overcharge protection voltages and maximum battery voltages and cell temperatures specific to four common types (i.e., chemistries) of batteries. If the product or battery manufacturer has not provided an appropriate overcharge protection voltage cutoff or maximum cell temperature design value for the battery in the manufacturer self-reported information (Annex D), the information in Table L.2 may be used when determining if the DUT has appropriate overcharge protection. The maximum cell temperature should not be exceeded at any time when the battery is being charged.

Table L.2 contains two voltage values for each battery type. The "recommended overcharge protection voltage" is the recommended setpoint for the DUT's overcharge protection (overvoltage protection). The tolerance given is intended to account for measurement uncertainty both in the DUT and in the laboratory apparatus. The "maximum battery testing voltage" is intended to ensure laboratory personnel safety and prevent immediate, permanent damage to the battery. The test laboratory should immediately stop charging a battery if the battery voltage reaches the maximum testing voltage.

Table L.2 – Recommended battery overcharge protection voltage and temperature specifications according to battery chemistry

Battery type	Overcharge protection voltage V/cell			Maximum battery testing voltage V/cell	Maximum charging temperature °C
	Recommended	Minimum	Maximum		
Valve-regulated lead-acid	= 2,40	2,35	2,45	2,60	45
Lithium-ion	≤ 4,20	--	4,25	4,26	45
Lithium iron phosphate	≤ 3,65	--	3,70	3,85	45
Nickel-metal hydride	≤ 1,45	--	1,50	1,51	60

IECNORM.COM : Click to view the full PDF of IEC TS 62257-9-5:2016 RLV
WITHDRAWN

Annex M
(normative)

Full-battery run time test

M.1 Background

The full-battery run time captures one of the key system-performance metrics from a user's perspective. It combines the relationship between battery capacity, circuit efficiency, and lighting system power consumption under realistic operating conditions.

In general terms, the full-battery run time test involves operating a DUT with a fully charged battery until the light output has decreased to some pre-defined minimum value (70 % in this case).

$$\Phi_{v,rel} = \Phi_v(t)/\Phi_v(t_i)$$

where

$\Phi_{v,rel}$ is the DUT's relative luminous flux, expressed in lumens (lm);

$\Phi_v(t)$ is the DUT's luminous flux, expressed in lumens (lm), corresponding to 70 % of the DUT's initial luminous flux;

$\Phi_v(t_i)$ is the DUT's initial luminous flux, expressed in lumens (lm).

The full-battery run time is defined as when $\Phi_{v,rel}$ reaches 70 % of the initial luminous flux $\Phi_v(t_i)$.[1)] To ensure that the DUT is measured in its thermal balance and with stabilized battery voltage (after initial voltage drop), the initial luminous flux is measured 20 min into the DUT's discharge.

M.2 Test outcomes

The test outcomes of the full-battery run time test are listed in Table M.1.

IECNORM.COM : Click to view the full PDF of IEC TS 62257-9-5:2016 RLV
Withdrawn

1) This limit was chosen since a decrease of more than 30 % is clearly visible for human eyes according to the Alliance for solid-state illumination systems and technologies (ASSIST).

Table M.1 – Full-battery run time test outcomes

Metric	Reporting units	Related aspects	Notes
Full-battery run time, to L_{70}	Hours (h)	4.2.8.5 Lighting full-battery run time	Run time to 70 % of initial light output.
Average relative light output, through L_{70}	%	4.2.9.1 Average luminous flux output 4.2.9.3 Average light distribution characteristics	The average RLO operating point determines the operating point for making light output measurements.
Average battery voltage and current at average relative light output (i.e., the "average operating point")	Voltage (V) and current (mA)	4.2.9.1 Average luminous flux output 4.2.9.3 Average light distribution characteristics	This operating point is used to make light output measurements.
Average power over the L_{70} run time	Watts (W)	4.2.8.5 Lighting full-battery run time	Average power draw over the run time while light output is over 70 % of initial light output.
Energy removed from the battery over the L_{70} run time	Watt·hours (Wh)	4.2.8.5 Lighting full-battery run time	Total energy removed over the run time while light output is over 70 % of initial light output.
Active deep discharge protection	Yes/no	4.2.3.13 Battery protection strategy	--
Deep discharge protection voltage	Volts (V)	4.2.3.13 Battery protection strategy	Measured only if the DUT has active deep discharge protection.
Passive deep discharge protection	Yes/no	4.2.3.13 Battery protection strategy	--
Passive deep discharge protection battery voltage at 24 h	Volts per cell (V/cell)	4.2.3.13 Battery protection strategy	Required only if tested for passive deep discharge protection.

M.3 Related tests

Annex M is related to the charge controller behaviour test (Annex S). The average operating point information from M.4.1.6 is used to set up the light output test (Annex I) and light distribution test (Annex T).

M.4 Procedure

M.4.1 Full-battery run time test

M.4.1.1 General

The DUT is set in the measurement cavity and turned on in order to record its light output over the duration of its discharge.

M.4.1.2 Equipment requirements

The following equipment is required. Equipment shall meet the requirements in Table CC.2.

- Integrating sphere, or other approved measurement cavity.
- Data-logging illuminance meter.
- Battery analyser.
- Voltage data logger.
- Current data logger (e.g. voltage data logger and current transducer).

IECNORM.COM : Click to view the full PDF of IEC TS 62257-9-5:2016 RLV
Withdrawn

- Low-voltage disconnect device that will stop a DUT's discharge when the DUT's battery reaches a specified voltage (recommended).

The total series resistance added by the test apparatus and all measurement equipment shall be no more than 60 mΩ. This value includes the resistance of the wires and connectors, if any, added in the sample preparation procedure (G.4.4).

M.4.1.3 Test prerequisites

Cycle the DUT's battery according to the procedures in the battery test annex (Annex K) and the information in the battery testing recommended practices annex (Annex L).

M.4.1.4 Apparatus

The full-battery run time test requires an accurate measurement of relative light output over time. In practice, this means using an integrating sphere or a fixed-geometry measurement cavity to measure the illuminance level [2] under constant conditions. Three approved measurement cavities are listed below in order of preference[3]. The lighting measurement is taken indirectly (reflected) in the first two types, while it is taken directly in the last type.

- Integrating sphere.
- A self-built photometer box with a baffled measurement of illuminance on a port (i.e. an "integrating cube" as shown in Figure M.1).
- A darkened room or cabinet with direct illuminance measurement under fixed geometry.

IEC

Figure M.1 – Interior view of photometer box with suspended light

M.4.1.5 Procedure

Before measurement, fully charge the battery using one of the two procedures according to the DUT's battery chemistry:

- If the DUT's battery is of NiMH chemistry, then use the procedures in the battery test (Annex K) – either the overcharge or negative slope charging methods in K.4.3.1.

---

[2] A measurement of illuminance in a fixed geometry (such as a dark room or isolated box) is always directly proportional in a linear fashion to the luminous flux of a lamp. Therefore, fixed-geometry measurements of illuminance may be used in place of luminous flux measurements for this test, which relies on relative light output to indicate the end of a discharge cycle.

[3] Any of these cavities can result in identical estimates for full-battery run time. The preference order is related to the degree of operator care required to maintain a fixed geometry in each, with a preference for cavities whose relative measurement is less sensitive to small changes in the system (e.g. from accidentally bumping into the cavity during a test).

IECNORM.COM : Click to view the full PDF of IEC TS 62257-9-5:2016 RLV
Withdrawn

- If the DUT's battery is of any other chemistry, then use the procedures in the active overcharge protection test (S.4.2). If the DUT's solar module has not yet been tested, then set up the apparatus according to Figure S.1 and set the current limit to the rated maximum power point current at STC, I_{mpp}.

The run time test may be started between 1 h and 10 h after the DUT has finished receiving its full charge.

a) Set and secure the DUT inside the test cavity such that it is stable and cannot be jostled. Position the direction of light indirectly towards the illuminance meter for an integrating sphere or photometer box measurement cavity. Position the direction of light directly towards the illuminance meter for a darkened room/cabinet or tube measurement cavity.

b) Prepare the voltage data logger to measure voltage across the DUT's battery terminals at intervals of 1 min or less. Prepare the current data logger to measure the current exiting the DUT's battery at the negative battery terminal at intervals of 1 min or less. If it is unclear if the DUT has deep discharge protection for its battery, the tester may prepare the low-voltage disconnect device so that it stops the DUT's discharge if the DUT's battery reaches the minimum battery testing voltage specified in Annex L.

NOTE In case of pulse-width modulation (PWM) controllers, aliasing effects (beat effects) can occur due to un-synchronised PWM frequency and sampling frequency of the current logger. This can lead to "chaotic" measurements which are difficult to interpret.

c) The light is switched on at the correct brightness setting and the measurement is started. Light output (luminous flux for the integrating sphere; illuminance for other measurement devices) should be recorded every minute, at a minimum.

d) The initial light output is measured after 20 min (t_i). This defines the point at which relative light output (RLO) is 100 %. In the case where the DUT's light output cascades in steps while it discharges and the DUT's light output steps down to a dimmer setting prior to having been on for 20 min: the test lab should make a note and adjust the L_{70} discharge period to represent the setting in which the DUT was tested for.

e) The test should be continued until the RLO reaches 10 % or less (i.e. the light output measurement is 10 % of the value at t_i).

M.4.1.6 Calculations

Analyse the time-series light output data to estimate the L_{70} run time, the average relative light output, and the operating characteristics (voltage and current) that correspond to the average relative light output. Analyse the time-series current and voltage data to estimate the average power over the L_{70} run time and the total energy removed from the battery over the L_{70} run time.

a) The end of the L_{70} discharge period is reached when the RLO is 70 % of the initial value at t_i (i.e., the light output is 70 %). The result shall be noted, expressed in hours (h).

b) If an integrating sphere was utilized, use the luminous flux averaged over the L_{70} run time.

c) The recorded data should be presented in a graph such as the one shown in Figure M.2 for each brightness level (Figure M.2 shows only the result of one brightness level). The graph should include the full discharge, beginning at 0 min, and may include RLO values greater than 100 %. If more than one brightness level are tested, prepare a separate graph for each test.

IECNORM.COM : Click to view the full PDF of IEC TS 62257-9-5:2016 RLV
WITHDRAWN

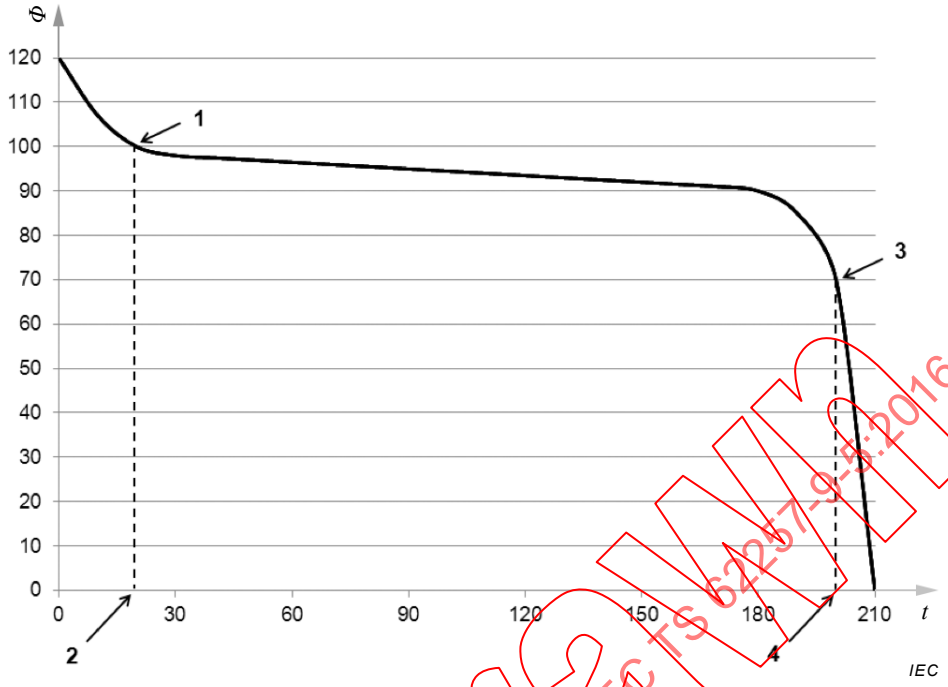

Key

t Time (min)

Φ Relative light output (%), which is directly proportional to the luminous flux output

1 20 min from point DUT is turned on

2 t_i, time when RLO is defined as 100 %

3 L_{70} reached (RLO is 70 %)

4 t_{70}, time when RLO is 70 %

Figure M.2 – Plot of example results from the full-battery run time test

d) Determine the average power over the L_{70} run time ($P_{b,i}$) using the following formula:

$$P_{b,i} = \frac{\sum_i \left(I_{b,i} \cdot V_{b,i} \right)}{n}$$

where

$P_{b,i}$ is the average power exiting the battery over the L_{70} run time, in watts (W);

$I_{b,i}$ is the current exiting the battery over the L_{70} run time, in amperes (A);

$V_{b,i}$ is the voltage exiting the battery over the L_{70} run time, in volts (V);

n is the total number of current and voltage measurements over the L_{70} run time (unitless).

e) Determine the energy removed from the battery over the L_{70} run time ($E_{b,i}$) using the following formula:

$$E_{b,i} = \sum_i \left(I_{b,i} \cdot V_{b,i} \cdot t_i \right)$$

where

$E_{b,i}$ is the energy exiting the battery over the L_{70} run time, in watt·hours (Wh);

$I_{b,i}$ is the current exiting the battery over the L_{70} run time, in amperes (A);

$V_{b,i}$ is the voltage exiting the battery over the L_{70} run time, in volts (V);

IECNORM.COM : Click to view the full PDF of IEC TS 62257-9-5:2016 RLV
Withdrawn

t_i is the duration of time associated with each current and voltage point over the L_{70} run time, in hours (h).

f) Determine the average relative light output during the L_{70} run time (RLO_{avg}).

g) Create a table listing the relative light output and current as a function of voltage operating point for the steady-state operating period – defined as the period beginning 20 min into the tests (when RLO is defined as 100 %) and ending at the L_{70} point. The table should list each operating voltage during the period in increments of 0,01 V. The average relative light output and average current should be found based on all the steady state points that fall into each voltage "bin."

h) Determine the operating voltage (V_{avg}) and current (I_{avg}) that correspond to the average operating point (RLO_{L70}) based on the table.

M.4.2 Full-battery run time test with deep discharge protection measurement

M.4.2.1 General

The DUT is set in the measurement cavity and switched on to run while recording its light output, battery voltage, and current over the duration of its discharge.

M.4.2.2 Equipment requirements

The following equipment is required. Equipment shall meet the requirements in Table CC.2.

- Integrating sphere, or other appropriate optical cavity or dark room/closet.
- Data-logging illuminance meter.
- Battery analyser.
- Voltage data logger.
- Current data logger (e.g. voltage data logger and current transducer).
- Low-voltage disconnect device that will stop a DUT's discharge when the DUT's battery reaches a specified voltage (recommended).

M.4.2.3 Test prerequisites

Cycle the DUT's battery according to the procedures in the battery test annex (Annex K) and the information in the battery testing recommended practices annex (Annex L).

M.4.2.4 Apparatus

The full-battery run time with deep discharge protection measurement method requires the same apparatus as the full-battery run time test (Annex M).

M.4.2.5 Procedure

The procedure for the full-battery run time test combined with deep discharge protection measurement is equivalent to the procedure for the full-battery run time test (M.4.1.5), with the addition that the DUT shall remain on until it reaches the product's LVD, the battery voltage falls below the value set on the optional low-voltage disconnect device, or the DUT continues to remain on for 24 h after it reaches its L_{70} run time. When performing this procedure, take note of the DUT's operating current, which may be used to ensure the DUT is operating at the same setting during other tests. If the low-voltage disconnect device stops the DUT's discharge during the test, record that the battery voltage reached the minimum battery testing voltage and that no deep discharge voltage was observed.

If the battery contains internal circuitry (refer to F.4.3.5) and the measured deep discharge protection voltage is outside of the targets specified by the manufacturer (D.3.2.2) or the DUT's battery falls below the recommended deep discharge protection voltage specified in Annex L, the test may be repeated with the voltage data logger connected on the battery side of the internal circuitry, if the test laboratory determines that it is safe to do so.

IECNORM.COM : Click to view the full PDF of IEC TS 62257-9-5:2016 RLV
Withdrawn

M.4.2.6 Calculations

Analyse the time-series light output data to estimate the L_{70} run time and the average relative light output during the period (see M.4.1.6). Analyse the time-series current and voltage data to estimate the average power over the L_{70} run time, the total energy removed from the battery over the L_{70} run time, the average relative light output during the L_{70} run time, and the operating voltage (V_{avg}) and current (I_{avg}) that correspond to the average operating point (RLO_{L70}) (see M.4.1.6). Also, determine if the DUT has active or passive deep discharge protection incorporated into its charge controller and determine the deep discharge protection voltage.

If the DUT has active deep discharge protection, one of two observations will be seen: an abrupt drop will occur in the DUT's light output and current flow will quickly decrease to 0 A, or a relatively quick drop will occur in the DUT's light output and current will ultimately decrease to 0 A. At the instant before the light output reaches zero, the DUT's battery voltage is the active deep discharge protection voltage cutoff.

a) Report if active deep discharge protection was observed in the DUT.

b) If the DUT has active deep discharge protection, report the DUT's active deep discharge protection voltage, in volts (V). The battery voltage typically decreases until reaching its active deep discharge protection point. After the active deep discharge protection point is reached, typically the light turns off and the battery voltage increases. Determine the active deep discharge protection voltage by identifying the battery voltage just before the battery voltage increases.

   If the DUT does not have active deep discharge protection, the product could have passive deep discharge protection. If the DUT has passive deep discharge protection, a gradual decrease will occur in the DUT's light output and current will gradually decrease to a relatively low value. If the DUT's battery voltage is greater than or equal to the selected deep discharge protection voltage (see M.4.2.5) threshold 24 h after it reaches its L_{70} run time, then the product has appropriate passive deep discharge protection.

c) Report if passive deep discharge protection was observed in the DUT.

d) If the DUT has passive deep discharge protection, report the DUT's passive deep discharge protection voltage at 24 h, in volts (V). The battery voltage typically continues to decrease during the 24 hours after the DUT reaches its L_{70} run time. Determine the passive deep discharge protection voltage by identifying the battery voltage 24 h after the DUT reaches its L_{70} run time.

M.5 Reporting

Report the following in the full-battery run time test report.

- Metadata:
  - report name;
  - procedure(s) used;
  - DUT manufacturer;
  - DUT name;
  - DUT model number;
  - DUT setting;
  - name of test laboratory;
  - approving person;
  - date of report approval.
- Results for tested DUT aspects for samples 1 through n:
  - run time to L_{70} (h);
  - average relative light output during the run time period (RLO_{avg});

IECNORM.COM : Click to view the full PDF of IEC TS 62257-9-5:2016 RLV
Withdrawn

  - average operating point that corresponds to RLO_{avg}, V_{avg} (V), and I_{avg} (mA);
  - average power over the L_{70} run time (W);
  - energy removed from the battery over the L_{70} run time (Wh);
  - presence of active deep discharge protection, if applicable (yes/no);
  - active deep discharge protection voltage, if applicable (V);
  - presence of passive deep discharge protection, if applicable (yes/no);
  - passive deep discharge protection voltage at 24 h, if applicable (V).
- Average of n sample results for each DUT aspect tested.
- Coefficient of variation of n sample results for each DUT aspect tested (%).
- DUT's rating for aspects tested, if available.
- Deviation of the average result from the DUT's rating for each aspect tested, if available (%).
- Comments:
  - individual comments, as necessary, for samples 1 through n;
  - overall comments, as necessary, for collective set of samples 1 through n.
- Figures;
  - plot showing the luminous flux (lm) against the run time (min), as in Figure M.2.
- Table showing relative light output and current as a function of operating voltage, as described above.

Withdrawn
IECNORM.COM : Click to view the full PDF of IEC TS 62257-9-5:2016 RLV

Annex N
(normative)

Full discharge preparation

N.1 Background

Prior to starting selected run time tests, a DUT shall be fully discharged. When performing the full-battery run time test (Annex M), a DUT is considered fully discharged when it reaches its L_{70}. This is the point at which the DUT provides 70 % of the initial light output. The initial light output is the light output reading taken at minute 20 of the DUT's full-battery run time.

The grid charge test (Annex O), electromechanical charge test (Annex P), and solar charge test (Annex R) use a specified charge cycle and the DUT's initial state of charge will influence the DUT's performance during the charge. It is important that the DUT be set to a prescribed state of charge to simulate a full discharge prior to commencing the selected run time tests so the results are repeatable and comparable across products.

N.2 Test outcomes

There are no full discharge preparation procedures outcomes.

N.3 Related tests

The full discharge preparation procedures shall be performed on all DUTs prior to conducting the grid charge test (Annex O), electromechanical charge test (Annex P), and solar charge test (Annex R).

N.4 Procedure

N.4.1 General

Each DUT is fully discharged prior to starting selected run time tests.

N.4.2 Equipment requirements

One of the following two pieces of equipment is required for the full discharge preparation. Equipment shall meet the requirements in Table CC.2.

a) Battery analyser with the voltage, current, and capacity measurement tolerances specified in Clause 4 of IEC 61951-2:2011.

b) Timer disconnect device consisting of a digital timer and a relay that can break the connection between the DUT's circuit and its battery (e.g. an AC digital timer combined with an AC-actuated mechanical relay).

N.4.3 Test prerequisites

Before measurement, fully charge the battery using one of the two procedures according to the DUT's battery chemistry.

- If the DUT's battery is of NiMH chemistry, then use the procedures in the battery test (Annex K) – either the overcharge or negative slope charging methods in K.4.3.1.
- If the DUT's battery is of any other chemistry, then use the procedures in the active overcharge protection test (S.4.2). If the DUT's solar module has not yet been tested, then

IECNORM.COM : Click to view the full PDF of IEC TS 62257-9-5:2016 RLV
Withdrawn

set up the apparatus according to Figure S.1 and set the current limit to the rated maximum power point current at STC, I_{mpp}.

Any following steps may be started between 1 h and 10 h after the DUT has finished receiving its full charge.

N.4.4 Procedure

N.4.4.1 General

Products generally have one of five types of discharge curves.

a) A constant light output with a sharp turn-off when the product reaches its low-voltage disconnect (LVD) such that the light output does not drop below the L_{70} prior to turning off.

b) A relatively constant light output that begins to decrease in light output just prior to experiencing a sharp turn-off when the product reaches its LVD such that the light output does drop below the L_{70} prior to turning off.

c) A cascade of constant light outputs such that the product steps down in its light setting during its discharge, often reaching an LVD after providing some light in its lowest setting.

d) A gradually decreasing light output as the product discharges, reaching an LVD after hitting its L_{70}.

e) A gradually decreasing light output as the product discharges with no LVD.

If the product discharges as type a), proceed with procedure A (N.4.4.2). If the product discharges as type b), c), d), or e), proceed with either procedure B1 (N.4.4.3) or procedure B2 (N.4.4.4).

N.4.4.2 Procedure A

The following steps shall be followed.

a) Set the DUT in a secure location.

b) Turn the DUT on in the setting that it will be tested in for the selected run time test.

c) Allow the DUT to discharge uninterrupted until its LVD automatically turns it off.

d) After the DUT finishes discharging, wait at least 60 min prior to commencing the selected run time test.

N.4.4.3 Procedure B1

The following steps shall be followed.

a) Calculate the average discharge current measured from the DUT's battery during its full-battery run time test (Annex M) until it reached its L_{70} in the particular setting that it will be tested in for the selected run time test.

b) Set the DUT on the battery analyser such that it discharges at the average discharge current calculated in step a) for the duration of its full-battery run time (Annex M) until it reached L_{70} in the particular setting that it will be tested in for the selected run time test.

c) After the DUT finishes, wait at least 60 min prior to commencing the selected run time test.

N.4.4.4 Procedure B2

The following steps shall be followed.

a) Determine the time that the DUT reached its L_{70} during its full-battery run time test (Annex M) in the particular setting that it will be tested in for the selected run time test.

b) Program the timer for the duration of its full-battery run time (Annex M) until it reached L_{70} in the particular setting that it will be tested in for the selected run time test.

IECNORM.COM : Click to view the full PDF of IEC TS 62257-9-5:2016 RLV
Withdrawn

c) Connect the DUT to the timer device such that the timer device relay will disconnect the DUT circuit from the battery upon reaching the programmed discharge time. Turn the DUT on in the setting to be tested for the selected run time test.

d) After the DUT finishes, wait at least 60 min prior to commencing the selected run time test.

N.4.5 Calculations

No calculations are required with the full discharge preparation procedures.

N.5 Reporting

No reporting is required with the full discharge preparation procedures.

Withdrawn
IECNORM.COM : Click to view the full PDF of IEC TS 62257-9-5:2016 RLV

Annex O
(normative)

Grid charge test

O.1 Background

The possibility of grid charging improves the usability of an LED lighting product, even if it is designed for use in remote areas. This module describes the method for measuring the grid-charge run time of the lighting product.

The DUT is grid charged via the provided power adapter for 8 h.

O.2 Test outcomes

The test outcomes of the grid charge test are listed in Table O.1.

Table O.1 – Grid charge test outcomes

Metric	Reporting units	Related aspects	Notes
Grid-charge run time	Hours (h)	4.2.8.6 Grid-charge run time	--

O.3 Related tests

The grid charge test requires the full-battery run time test (Annex M) to be performed before the test. Also, if the charge controller behaviour test (Annex S) is performed before the grid charge test and it is determined the DUT has overcharge protection, no overcharge protection device is required during the grid charge test.

O.4 Procedure

O.4.1 General

The DUT sample is charged by the grid for 8 h to determine the DUT's grid charge run times.

O.4.2 Equipment requirements

The following equipment is required. Equipment shall meet the requirements in Table CC.2.

- AC power adapter supplied with the DUT.
- Voltage data logger.
- Current data logger (e.g. voltage data logger and current transducer).
- Timer disconnect device.
- Overcharge disconnect device (if necessary).
- Surface-mounted thermocouple(s) and a thermocouple reader (optional).

O.4.3 Test prerequisites

The following steps shall be followed.

IECNORM.COM : Click to view the full PDF of IEC TS 62257-9-5:2016 RLV
Withdrawn

a) The DUT battery should be discharged according to the full discharge preparation procedure (Annex N).

b) If it is unknown whether the DUT has an overcharge protection disconnect, an overcharge protection disconnect device should be used to protect the battery during the test.

c) Check that the grid voltage is suitable for the DUT's supplied AC power adapter.

O.4.4 Apparatus

A suitable location for the DUT to be undisturbed for 8 h while grid charging is required.

O.4.5 Procedure

The following steps shall be followed.

a) Set up the circuit cutoff device to disconnect the AC power circuit after 8 h of testing.

b) If it is unknown whether the DUT has an overcharge protection disconnect, integrate the overcharge protection disconnect device into the setup. Optionally, monitor the DUT's battery temperature to ensure that it does not exceed a safe value. The maximum allowable voltage setpoint for the overcharge disconnect device and the maximum allowable cell temperature may be selected from Table L.2. If temperature monitoring is used, lithium-based batteries shall not be allowed to exceed 45 °C unless higher temperatures are allowed by the battery manufacturer.

c) Plug the AC power adapter supplied with the DUT into the circuit cutoff device.

d) Set up the current and voltage sensors to monitor the charge into the battery and set data logging for one minute intervals or shorter.

e) Enable the circuit and begin the 8 h charging cycle.

f) After 8 h of grid charging, disconnect the equipment and check for data consistency.

O.4.6 Calculations

The following calculations shall be made:

a) Find the instantaneous power for each data point by multiplying current and voltage.

b) Find the total energy input to the battery during the 8 h charging cycle by multiplying each instantaneous power by the time step duration and summing the energy.

c) Find the grid-charge run time for each setting with the formula below:

$$t_{\text{grid,s}} = \min\left(\frac{E_{\text{grid}} \cdot \eta_{\text{batt}}}{P_{\text{FBR,s}}}, t_{\text{FBR,s}}\right)$$

where

$t_{\text{grid,s}}$ is the grid-charge run time on setting "s" in hours (h);

E_{grid} is the total energy input to the battery during the grid charge in watt·hours (Wh);

η_{batt} is the battery efficiency as a fraction;

$P_{\text{FBR,s}}$ is the average power during the full-battery run time for setting "s" in watts (W);

$t_{\text{FBR,s}}$ is the full-battery run time in hours (h).

O.5 Reporting

Report the following in the grid charge test report.

- Metadata:
  - report name;
  - procedure(s) used;

IECNORM.COM : Click to view the full PDF of IEC TS 62257-9-5:2016 RLV
Withdrawn

  - DUT manufacturer;
  - DUT name;
  - DUT model number;
  - name of test laboratory;
  - approving person;
  - date of report approval.
- Results for tested DUT aspects for samples 1 through n:
  - grid-charge run time to L_{70} (h).
- Comments:
  - individual comments, as necessary, for samples 1 through n;
  - overall comments, as necessary, for collective set of samples 1 through n.

Withdrawn
IECNORM.COM : Click to view the full PDF of IEC TS 62257-9-5:2016 RLV

Annex P
(normative)

Electromechanical charge test

P.1 Background

A number of lighting products provide mechanical crank-charging as an alternative to grid and/or PV module charging.

Annex P describes a procedure for measuring the energy generated by electromechanical charging under predetermined conditions.

P.2 Test outcomes

The test outcomes of the electromechanical charge test are listed in Table P.1.

Table P.1 – Mechanical charge test outcomes

Metric	Reporting units	Related aspects	Notes
Electromechanical charger power rating	Watts (W)	4.2.8.7 Electromechanical charge ratio	--
Electromechanical charging ratio	Unitless (minutes of run time per minute of charging)	4.2.8.7 Electromechanical charge ratio	--

P.3 Related tests

The electromechanical charge test requires the full-battery run time test (Annex M) to be performed before the test.

P.4 Procedure

P.4.1 General

The DUT sample is electromechanically crank-charged for 5 min at approximately 120 rpm with measurements of the current and voltage available to charge the battery.

P.4.2 Equipment requirements

The following equipment is required. Equipment shall meet the requirements in Table CC.2.

- Voltage data logger.
- Current data logger.
- Stopwatch or clock.

P.4.3 Test prerequisites

The DUT battery should be discharged according to full discharge preparation procedure (Annex N).

IECNORM.COM : Click to view the full PDF of IEC TS 62257-9-5:2016 RLV
Withdrawn

P.4.4 Apparatus

No particular apparatus is required. For electromechanical chargers that require a fixed position (e.g. bicycle crank chargers), a special apparatus may need to be built or used.

P.4.5 Procedure

The following steps shall be followed.

a) Attach the voltage and current sensors to the product to measure charge into the battery. Set the data-logging interval for 2 s or less and begin logging.

b) Crank-charge the DUT for 5 min at approximately 120 rpm, resulting in approximately 600 total crank rotations.

c) Download the data and check for consistency.

P.4.6 Calculations

The following calculations shall be made.

a) Find the actual duration of the time series according to the dataset.

b) Calculate the instantaneous power input to the battery for each data point in the time series by multiplying current and voltage.

c) Find the average power input over the charging period.

d) Estimate the electromechanical charging ratio for each product setting tested with the formula below:

$$R_s = \frac{\eta_{batt} \cdot P_{FBR,s}}{P_{mech}}$$

where

R_s is the electromechanical run time to charging ratio on setting "s";

η_{batt} is the battery efficiency;

$P_{FBR,s}$ is the average power during the full-battery run time for setting "s";

P_{mech} is the average power during the electromechanical charging period.

P.5 Reporting

Report the following in the electromechanical charge test report.

- Metadata:
  - report name;
  - procedure(s) used;
  - DUT manufacturer;
  - DUT name;
  - DUT model number;
  - name of test laboratory;
  - approving person;
  - date of report approval.
- Results for tested DUT aspects for samples 1 through n:
  - electromechanical charger power;
  - electromechanical charge ratio for each product setting of interest.
- Comments:

IECNORM.COM : Click to view the full PDF of IEC TS 62257-9-5:2016 RLV
Withdrawn

– individual comments, as necessary, for samples 1 through n;
– overall comments, as necessary, for collective set of samples 1 through n.

Withdrawn
IECNORM.COM : Click to view the full PDF of IEC TS 62257-9-5:2016 RLV

Annex Q
(normative)

Photovoltaic module I-V characteristics test

Q.1 Background

The purpose of the outdoor photovoltaic (PV) module I-V characteristics test is to validate the DUT manufacturer's PV module data (if available) and determine the PV module's I-V characteristic curve under standard test conditions (STC) and typical module operating temperatures (TMOT).

Solar LED lamp units are often powered by PV modules having a power range from approximately 0,3 W to 10 W.[4)] When selecting a measurement instrument, it is important to ensure that it is able to make accurate measurements of modules in the desired size range. This is particularly important for modules rated at less than 3,0 W since most measurement equipment is not designed for very small modules.

The PV module may be measured with a solar simulator in accordance with IEC 60904-1 and corrected for TMOT with IEC 60891:2009. This is the preferred technique for characterizing PV modules and laboratories with access to a solar simulator should use this procedure.

The test may also be performed with an instrument that is designed to make outdoor performance measurements of small solar modules.

Q.2 Test outcomes

The test outcomes of the outdoor photovoltaic module I-V characteristics test are listed in Table Q.1.

Table Q.1 – Outdoor photovoltaic module I-V characteristics test outcomes

Metric	Reporting units	Related aspects	Notes
Short-circuit current (I_{sc}) at STC	Amperes (A)	4.2.6.1 Solar I-V curve parameters	Report at STC
Open-circuit voltage (V_{oc}) at STC	Volts (V)	4.2.6.1 Solar I-V curve parameters	Report at STC
Maximum power point power (P_{mpp}) at STC	Watts (W)	4.2.6.1 Solar I-V curve parameters	Report at STC
Maximum power point current (I_{mpp}) at STC	Amperes (A)	4.2.6.1 Solar I-V curve parameters	Report at STC
Maximum power point voltage (V_{mpp}) at STC	Volts (V)	4.2.6.1 Solar I-V curve parameters	Report at STC
Short-circuit current ($I_{sc,TMOT}$) at TMOT	Amperes (A)	4.2.6.1 Solar I-V curve parameters	Report at TMOT
Open-circuit voltage ($V_{oc,TMOT}$) at TMOT	Volts (V)	4.2.6.1 Solar I-V curve parameters	Report at TMOT
Maximum power point power ($P_{mpp,TMOT}$) at TMOT	Watts (W)	4.2.6.1 Solar I-V curve parameters	Report at TMOT
Maximum power point current ($I_{mpp,TMOT}$) at TMOT	Amperes (A)	4.2.6.1 Solar I-V curve parameters	Report at TMOT

4) This is the nominal power a PV module shows under standard test conditions (STC). Since being at STC is extremely rare in practice, the achieved power is usually lower.

IECNORM.COM : Click to view the full PDF of IEC TS 62257-9-5:2016 RLV
Withdrawn

Metric	Reporting units	Related aspects	Notes
Maximum power point voltage ($V_{mpp,TMOT}$) at TMOT	Volts (V)	4.2.6.1 Solar I-V curve parameters	Report at TMOT
Temperature coefficient	Per degree Celsius (1/°C)	4.2.6.1 Solar I-V curve parameters	Based on temperature variation in $V_{oc.}$
STC I-V Curve dataset	Volts (V), Amperes (A)	4.2.6.1 Solar I-V curve parameters	Delimited dataset

Q.3 Related tests

Annex Q should be completed before the solar charge test (Annex R).

Q.4 Procedure

Q.4.1 Testing using IEC 61215 (all parts)

The I-V characteristics of the DUT's PV module may be determined using the "Performance at STC and NMOT" test of IEC 61215-2. Test results provided by the manufacturer of the DUT may be accepted if the tests were performed at a laboratory accredited to perform the tests by a recognized accrediting organization (e.g. ILAC) and if the test results include full datasets for the I-V curves.

If the module's nominal module operating temperature (NMOT), as determined in IEC 61215-2, is within the range 50 °C ± 5 °C, the performance at TMOT may be assumed to be identical to the performance at NMOT. Otherwise, the I-V curve at TMOT (50 °C cell temperature, solar irradiance of 1 000 W/m^2, and air mass 1,5) shall be calculated from the performance at STC and NMOT using any of the correction procedures in IEC 60891:2009. Correction procedure 3 (IEC 60891:2009, 3.4) is recommended as it requires no additional measurements other than the two I-V curves.

Q.4.2 Test programme using a solar simulator

Q.4.2.1 Test prerequisites

If the PV module is amorphous silicon or otherwise could be subject to degradation (e.g. because it is thin film or of unknown technology), it shall sun-soak for 30 days prior to performing this test.

Q.4.2.2 I-V curve measurements

Use the procedure defined in IEC 60904-1:2006, with the following modifications.

- The spectral mismatch correction described in IEC 60904-1:2006, Clause 3 a), may be omitted if the reference device is a PV cell or module made using the same cell technology or using optical filtration to achieve a spectral response typical of the cell technology of the DUT. For example, a monocrystalline PV cell with KG5 glass window may be used with an amorphous silicon DUT.
- For measurements in steady-state simulated sunlight, the irradiance sensor of IEC 60904-1:2006, 4.2 d), may be omitted.
- For temperature measurements, a single thermocouple, meeting the accuracy requirements of Q.4.3.2 and positioned directly behind a cell near the centre of the module, may be used. If the back of the module is inaccessible, the front-mounted thermocouple procedure detailed in the outdoor test procedure (Q.4.3.5.3) shall be used for the indoor test.
- If the PV module charges the DUT via a cable extended from the PV module's junction box, measure the I-V curve from the end of the cable that plugs into the DUT for charging by

IECNORM.COM : Click to view the full PDF of IEC TS 62257-9-5:2016 RLV
Withdrawn

cutting the connector from the end of the PV module cable, leaving as much of the cable connected to the PV module as possible, and strip the wire ends. However, if the PV module's performance deviates from the advertised values by more than the truth-in-advertising tolerance specified in the product specification, the I-V curve test may be repeated measuring the I-V curve from the PV module's junction box (before the PV module's charging cable). The results from the original test shall be used as input for the solar charge test and results from the repeated test shall be reported for the photovoltaic module I-V characteristics test.

Q.4.2.3 I-V curve adjustment for STC and TMOT

The I-V curve measured in Q.4.2.1 shall be adjusted to STC (25 °C cell temperature, solar irradiance of 1 000 W/m^2, and air mass 1,5) and TMOT (50 °C cell temperature, solar irradiance of 1 000 W/m^2, and air mass 1,5) using either of the following two procedures, ensuring that all voltage measurements are taken with the same device and all temperature measurements are taken with the same device:

Procedure 1: Use any of the correction procedures defined in IEC 60891:2009. For temperature coefficient measurements, a single thermocouple, meeting the accuracy requirements of Annex CC and positioned directly behind a cell near the centre of the module, may be used. If the back of the module is inaccessible, the front-mounted thermocouple procedure detailed in the outdoor test procedure (Q.4.3.5.3) shall be used.

NOTE Correction procedure 3 (IEC 60891:2009, 3.4) allows temperature correction using two I-V curves at different temperatures. If no irradiance correction is needed, this method is likely to be the simplest for a low-cost test.

Procedure 2: Measure the temperature coefficient of voltage ($T_{c,voc}$) using the procedure defined in Q.4.3, under either natural or simulated sunlight, then use the calculations in Q.4.3.5.4 to adjust the curve to STC and TMOT.

Q.4.3 Outdoor photovoltaic module I-V characteristics test

Q.4.3.1 General

The PV module is tested outdoors to obtain its characteristic I-V curve, from which the maximum power (P_{mpp}), open-circuit voltage (V_{oc}), and short-circuit current (I_{sc}) are determined.

Q.4.3.2 Equipment requirements

The following equipment is required. Equipment shall meet the requirements in Table CC.2.

- Outdoor I-V curve analyser. The analyser may include an integrated pyranometer, provided it is fast-response (i.e. silicon PV-based pyranometer).
- Fast-response (i.e. silicon PV-based) pyranometer.
- Voltmeter or multimeter.
- Surface-mounted thermocouple(s) and a thermocouple reader.

Q.4.3.3 Test prerequisites

The following prerequisites shall be met.

- Constant atmospheric conditions (i.e. a clear, sunny day with no clouds).
- Incident solar irradiance between 850 W/m^2 and 1 150 W/m^2 and an ambient temperature between 15 °C and 35 °C.
- Air mass less than or equal to 2.

IECNORM.COM : Click to view the full PDF of IEC TS 62257-9-5:2016 RLV
Withdrawn

- If the PV module is amorphous silicon or otherwise could be subject to degradation (e.g. because it is thin film or of unknown technology), it shall sun-soak for 30 days prior to performing this test.

Q.4.3.4 Apparatus

There should be an appropriate stand to hold the PV module and pyranometer in the same plane, directly normal to the sun. The PV module should be placed as close as possible to the pyranometer to ensure that each device "sees" the same sky view. A sighting tube with bracket may be used to ensure the stand is directly normal to the sun (Figure Q.1).

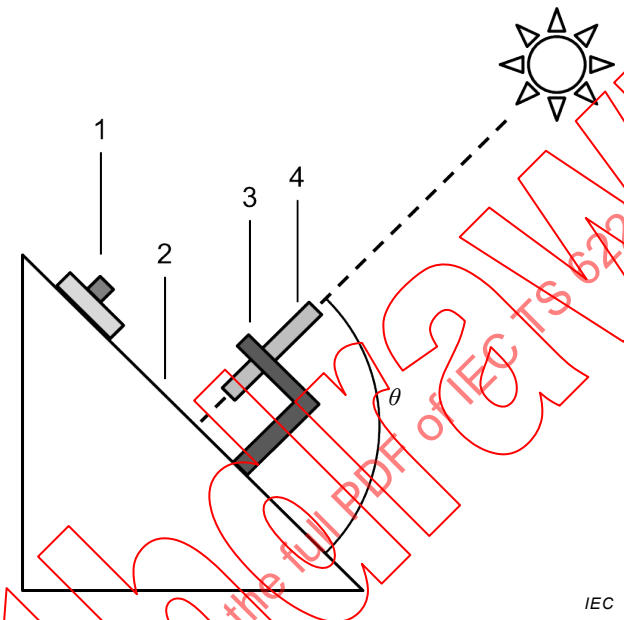

Key

1 Pyranometer
2 Board or other flat surface
3 Bracket
4 Sighting tube
θ 90°

Figure Q.1 – PV module I-V curve testing rack

Q.4.3.5 Procedure

Q.4.3.5.1 General

Determine the appropriate thermocouple mounting technique based on PV panel configuration. If the PV module is separate from the lighting product or can be easily removed without damaging the active PV material and the back of the PV module is accessible, use the back-mounted thermocouple procedure (Q.4.3.5.2). Otherwise, use the front-mounted thermocouple procedure (Q.4.3.5.3).

Procedure 1 of Q.4.2.3 may be used as an alternative means to adjust the I-V curve to STC and TMOT (as opposed to using the methods provided below in Q.4.3.5.2 and Q.4.3.5.3). This would involve taking I-V curve measurements at two different module temperatures, rather than only taking I-V curve measurements when the module has reached thermal equilibrium after warming under natural sunlight. When using procedure 1 of Q.4.2.3, it is acceptable to use step a) in Q.4.3.5.4 to adjust all measured curves to an irradiance value of 1 000 W/m^2.

IECNORM.COM : Click to view the full PDF of IEC TS 62257-9-5:2016 RLV
Withdrawn

Q.4.3.5.2 Back-mounted thermocouple

The following steps shall be followed.

a) Before the PV module is exposed to sunlight, do the following:

   1) cut the connector from the end of the PV module cable, leaving as much of the cable connected to the PV module as possible, and strip the wire ends;

   2) connect a voltage meter or multimeter (DC voltage range) to the PV module.

b) Fix the thermocouple to the back of the PV module directly behind a cell near the centre of the active area and affix insulating material (e.g. foil-backed foam tape) over the thermocouple.

c) Expose the PV module to direct normal sunlight and immediately measure and record the open-circuit voltage ($V_{oc,1}$) and the PV module temperature (T_1).

d) Leave the PV module in direct normal sunlight until thermal equilibrium is reached (i.e. the PV module temperature is not changing by more than 1 °C/min).

e) Connect the PV module to the I-V curve analyser per the I-V curve analyser's manufacturer's instructions.

f) Execute the I-V measurement per the I-V curve analyser's manufacturer's instructions and record the PV module temperature (T) and incident solar irradiance.

g) After the I-V curve measurement, measure and record the PV module temperature again (T_2) using the same instrument that was used in step a).

h) Measure the record the PV module's open-circuit voltage at T_2 ($V_{oc,2}$) using the same instrument that was used in step a).

Q.4.3.5.3 Front-mounted thermocouple

The following steps shall be followed.

a) Before the PV module is exposed to sunlight, do the following:

   1) connect a voltage meter or multimeter (DC voltage range) to the PV module.

b) Fix the thermocouple to the front of the PV module directly over a cell in the centre of the active area and affix insulating material (e.g. foil-backed foam tape) over the thermocouple.

c) Expose the PV module to direct normal sunlight and immediately measure and record the PV module temperature (T_1), then quickly remove the thermocouple and insulating material from the front of the PV module, and measure and record the open-circuit voltage ($V_{oc,1}$).

d) After measuring ($V_{oc,1}$), again fix the thermocouple to the front of the PV module directly over a cell in the centre of the active area in the same location as before and affix insulating material (e.g. foil-backed foam tape) over the thermocouple.

e) Leave the PV module in direct normal sunlight until thermal equilibrium is reached (i.e. the PV module temperature is not changing by more than 1 °C/min).

f) Connect the PV module to the I-V curve analyser per the I-V curve analyser's manufacturer's instructions.

g) Remove the thermocouple.

h) Measure and record the PV module's open-circuit voltage at T_2 ($V_{oc,2}$) using the same instrument that was used in step a).

i) Immediately after obtaining $V_{oc,2}$, affix the thermocouple and insulating material to the front of the PV module (i.e. the same place as in step a)) and measure and record the temperature of the PV module (T_2 and T) using the same instrument that was used in step a).

j) Immediately execute the I-V measurement per the I-V curve analyser's manufacturer's instructions.

IECNORM.COM : Click to view the full PDF of IEC TS 62257-9-5:2016 RLV

Q.4.3.5.4 Calculations

The following calculations shall be made, unless temperature adjustments are being performed using procedure 1 of Q.4.2.3. If procedure 1 of Q.4.2.3 is being used, the current measurements may be converted to 1 000 W/m^2 using step a).

a) Convert all of the current measurements to STC using the following formula:

$$I = I_{\mathrm{m}} \times \frac{1\,000\ \mathrm{W/m^2}}{G}$$

where

I is the PV module's current at STC, in amperes (A);

I_{m} is the PV module's measured current, in amperes (A);

G is the measured incident solar irradiance during the I-V curve measurement, in watts per square metre (W/m^2).

b) Determine the temperature coefficient for the voltage ($T_{\mathrm{c,voc}}$) using the following formula:

$$T_{\mathrm{c,voc}} = \frac{\left(V_{\mathrm{oc},1} - V_{\mathrm{oc},2}\right)/V_{\mathrm{oc},2}}{T_1 - T_2}$$

where

$T_{\mathrm{c,voc}}$ is the PV module's temperature coefficient for the voltage, per degree Celsius (1/°C);

$V_{\mathrm{oc},1}$ is the PV module's open-circuit voltage immediately after exposure to sunlight, in volts (V);

$V_{\mathrm{oc},2}$ is the PV module's open-circuit voltage after the I-V measurement is taken, in volts (V);

T_1 is the PV module's temperature immediately before exposure to sunlight, in degrees Celsius (°C);

T_2 is the PV module's temperature after the I-V curve measurement is taken, in degrees Celsius (°C).

c) Convert all of the voltage measurements to STC using the following formula:

$$V = V_{\mathrm{m}}\left[1 + T_{\mathrm{c,voc}}\left(T_{\mathrm{stc}} - T\right)\right]$$

where

V is the PV module's voltage at STC, in volts (V);

V_{m} is the PV module's measured voltage, in volts (V);

$T_{\mathrm{c,voc}}$ is the PV module's temperature coefficient for the voltage, per degree Celsius (1/°C);

T_{stc} is the temperature at STC, 25 °C;

T is the PV module's temperature during the I-V curve measurement, in degrees Celsius (°C).

d) The PV module's short-circuit current at STC (I_{sc}) is the current corresponding to 0 V on the STC-adjusted I-V curve.

e) The PV module's open-circuit voltage at STC (V_{oc}) is the voltage corresponding to 0 A on the STC-adjusted I-V curve.

f) Determine the PV module's measured maximum power point power at STC (P_{mpp}) using the following formula:

$$P_{\mathrm{mpp}} = \max\left(I \cdot V\right)$$

where

IECNORM.COM : Click to view the full PDF of IEC TS 62257-9-5:2016 RLV
Withdrawn

P_{mpp} is the PV module's measured maximum power point power at STC, in watts (W);

I is the PV module's current at STC, in amperes (A);

V is the PV module's voltage at STC, in volts (V).

g) The PV module's maximum power point current at STC (I_{mpp}) is the current corresponding to P_{mpp} on the STC-adjusted I-V curve.

h) The PV module's maximum power point voltage at STC (V_{mpp}) is the voltage corresponding to P_{mpp} on the STC-adjusted I-V curve.

i) Repeat steps c) through h) for TMOT in place of STC, where TMOT is defined as 50 °C.

Q.5 Reporting

Report the following in the outdoor photovoltaic module I-V characteristics test report.

- Metadata:
  - report name;
  - procedure(s) used;
  - lighting product manufacturer;
  - lighting product name;
  - lighting product model number;
  - name of test laboratory;
  - description of location of test;
  - approving person;
  - date of report approval.
- Results for tested PV module aspects for samples 1 through n:
  - short-circuit current at STC (A);
  - open-circuit voltage at STC (V);
  - maximum power point power at STC (W);
  - maximum power point current at STC (A);
  - maximum power point voltage at STC (V);
  - short-circuit current at TMOT (A);
  - open-circuit voltage at TMOT (V);
  - maximum power point power at TMOT (W);
  - maximum power point current at TMOT (A);
  - maximum power point voltage at TMOT (V);
  - temperature coefficient for voltage (1/°C).
- Average of n sample results for each PV module aspect tested.
- Coefficient of variation of n sample results for each PV module aspect tested (%).
- PV module's rating for aspects tested, if available.
- Deviation of the average result from the PV module's rating for each aspect tested, if available (%).
- Comments:
  - individual comments, as necessary, for samples 1 through n;
  - overall comments, as necessary, for collective set of samples 1 through n.
- Figures:
  - single plot showing the I-V and power-voltage curves for every PV module sample.

IECNORM.COM : Click to view the full PDF of IEC TS 62257-9-5:2016 RLV
Withdrawn

- Datasets:
  - comma-delimited or tabular dataset listing current (A) and voltage (V) adjusted to STC across the full measured I-V curve.

Withdrawn
IECNORM.COM : Click to view the full PDF of IEC TS 62257-9-5:2016 RLV

Annex R
(normative)

Solar charge test

R.1 Background

The solar charge test provides estimates for two key sources of energy loss during solar charging: suboptimal operation of the solar module ("solar operation efficiency") and losses from the DUT's internal electronic circuits that charge the battery(-ies) ("battery-charging circuit efficiency"). Along with the battery round-trip energy efficiency (Annex K), these values are used in the daily energy service calculations (Annex GG) and/or the solar run time calculation (R.4.4).

A power supply along with two resistors is used to simulate a solar module and charge a DUT's battery(-ies). The voltage operating point during the test combined with the solar I-V curve is used to calculate the solar operating efficiency. Measurements of energy input to the DUT solar charging port and DUT battery(-ies) are used to estimate the battery-charging circuit efficiency.

If the DUT is a kit that has multiple independent light units (each with their own battery pack) that can be charged simultaneously by a single solar module, the test should be done with all the independent light units connected at once. This will require additional measurements of battery current and voltage for each battery.

R.2 Test outcomes

The test outcomes of the solar charge test are listed in Table R.1.

Table R.1 – Solar charge test outcome

Metric	Reporting units	Related aspects	Note
Solar operation efficiency ($\eta_{sol\text{-}op}$)	Percentage	4.2.6 Solar module aspects	This is representative of the efficiency with respect to optimal operation of the PV module (where optimal operation is at the maximum power point).
Battery-charging circuit efficiency (η_{bcc})	Percentage	4.2.10 Battery-charging circuit efficiency	This is a lump figure for the whole lighting kit and is not disaggregated by lighting unit.
Average charging voltage	V	n/a	This value is used in the assessment of DC ports (Annex EE) when a typical charging voltage is needed.
Solar run time (standard solar day)	Hours (h)	4.2.8.3 Solar-day lighting run time	Multiple outcomes will be found – one for each setting on each independent lighting unit.
Solar charging system characteristics	n/a	n/a	This describes key features of the solar charging circuit

R.3 Related tests

The solar charge test is related to the battery test (Annex K), the outdoor photovoltaic module I-V characteristics test (Annex Q), the full-battery run time test (Annex M), and the energy service calculations (Annex GG).

IECNORM.COM : Click to view the full PDF of IEC TS 62257-9-5:2016 RLV

R.4 Procedure

R.4.1 General

In this test, the DUT is charged using an apparatus to simulate the PV module during a typical day of solar charging. The PV simulation shall be performed using a resistor network and programmable laboratory power supply or a solar array simulator meeting the requirements of Table CC.2. The voltage and current at the DUT's PV input and battery(-ies) are recorded at one-minute or shorter intervals.

R.4.2 Test method using a resistor network

R.4.2.1 Equipment requirements

The following equipment is required. Equipment shall meet the requirements in Table CC.2.

- Programmable power supply with constant-voltage and constant-current modes and ability to automatically step through a timed program, or alternative apparatus described below.
- Voltage data loggers (one for the DUT's PV input and one for each of the DUT's batteries).
- Current data loggers (e.g. voltage data logger and current transducer) (one for the DUT's PV input and one for each of the DUT's batteries).

  NOTE Most DUTs have only one battery.
- Series and parallel resistors (or variable resistors) for simulating PV input.
- Variable resistor for measuring the I-V curve from the PV simulator (optional).
- Resistance meter or multimeter.
- Surface-mounted thermocouple(s) and a thermocouple reader or other suitable surface-mounted temperature measurement devices (optional).
- Overcharge disconnect device that will stop a DUT's discharge when the DUT's battery reaches a specified voltage (if necessary).

Instead of a programmable power supply, an electronic apparatus designed to simulate the PV module's diode characteristic may be used. The characteristics of the apparatus shall be modelled and incorporated into the circuit simulation described in R.4.2.4 a). An example of an apparatus intended for this purpose is described by Stütz (2014). The use of such an apparatus can improve the curve-fitting accuracy and dynamic performance, especially with DUTs that use pulse-width modulation (PWM) or maximum power point tracking (MPPT). The laboratory shall ensure that any such apparatus has voltage and current accuracy at least equivalent to the overall accuracy of the resistor network with a power supply meeting the requirements above.

The series resistance added by the test apparatus and all measurement equipment between the PV-simulating apparatus and the DUT's PV input, and the series resistance added between the DUT and the battery, shall each be no more than 90 mΩ. This value includes the resistance of the wires and connectors, if any, added in the sample preparation procedure (G.4.4).

R.4.2.2 Test prerequisites

The DUT's battery should be at a state of charge that corresponds to the "end of discharge," which shall be accomplished using procedures in Annex N. Additionally, this test shall be performed after completion of the outdoor PV module I-V characteristics measurements (Annex Q), since the I-V curve information from the PV module during that test are needed to set up the inputs to the power supply for the electronics efficiency test. The results from the battery test (Annex K) and full-battery run time test (Annex M) are required for the calculations.

IECNORM.COM : Click to view the full PDF of IEC TS 62257-9-5:2016 RLV
Withdrawn

Special charging features that do not operate during a normal charge cycle, such as equalization or boost charging, shall not be enabled during this test, unless it is not possible to disable these features. Lights and appliances not containing batteries shall be disconnected and the DUT shall be turned off or set to standby mode (i.e. the mode in which the DUT's functionality is not active but the DUT's battery can be charged).

In some cases a product can contain multiple components with batteries that can charge from the PV module. In this case, there are two allowed methods for conducting the test. The choice of method depends on the characteristics of the product and the included appliances.

Method 1: The test is conducted with all batteries and appliances containing batteries connected, including those devices that can be charged from another battery in the system. The batteries in any light units are prepared according to Annex N. The batteries in any non-lighting appliances are prepared by operating the appliance for a duration equal to a typical day's usage; for appliances listed in Table GG.3, the typical use duration from Table GG.3 should be used. The run times for all appliances containing batteries are calculated in R.4.4.

Method 2: The test is conducted with all batteries connected except those batteries that can be charged from another battery in the system (i.e. batteries that can be charged at night). For example, if a system contains two battery units that connect to a single PV module via a splitter cable, both battery units would be connected for this test. However, a radio, torch, or portable lamp that contains a battery and charges from the DUT's main unit battery (e.g. via a USB port) would not be connected. Run times for lighting units and appliances that are not connected during the solar charge test shall be calculated using the methods in Annex GG.

R.4.2.3 Apparatus

The apparatus for the solar charge efficiency test is shown schematically in Figure R.1.

IECNORM.COM : Click to view the full PDF of IEC TS 62257-9-5:2016 RLV

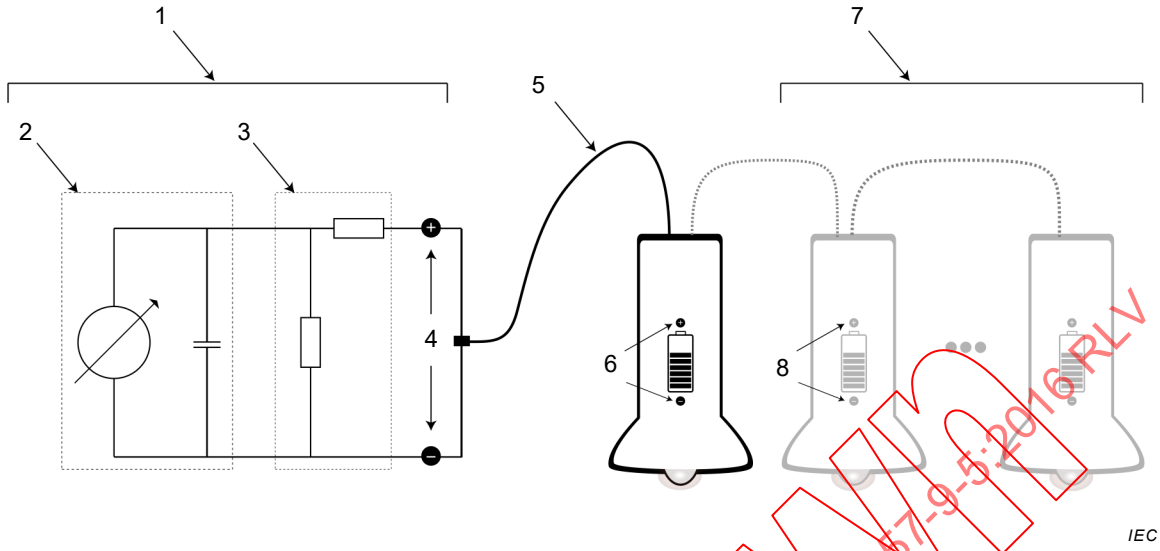

Key

1 PV simulation circuit

2 Laboratory power supply

3 Series and parallel resistors (or variable resistors)

4 PV simulation circuit output (measure current and voltage here during simulated solar charging)

5 Connection cable from PV simulation circuit to lighting unit

6 Lighting product battery (measure current and voltage here during simulated solar charging)

7 [optional] Additional lighting units with separate batteries that are included in the kit

8 [optional] Additional lighting unit battery(-ies) (measure current and voltage here during simulated solar charging)

Figure R.1 – Schematic of the power supply and DUT connection for the solar charge efficiency test

R.4.2.4 Procedure

Preparation for the test.

a) Use the TMOT I-V curve (from Annex Q) to find appropriate resistor values and power supply set points to simulate the PV module operating at TMOT during the charging cycle. A computer spreadsheet or program should be used for this step.

   – The spreadsheet or program is used to estimate the response curve of the PV simulator circuit over the range of voltages that corresponds to the I-V curve.

   – The input variables to the spreadsheet shall be the following:

     • series resistance;

     • parallel resistance;

     • voltage setpoint;

     • current setpoints corresponding to each level of simulated solar irradiance listed in Table R.2.

   – The circuit simulation shall be based on Ohm's law. When the diode characteristic is simulated using an apparatus other than a laboratory power supply, as described in R.4.2.1, the behaviour of the apparatus shall be included in the circuit model.

   – The spreadsheet or program shall estimate the TMOT current at evenly spaced voltage points by linearly interpolating between points on the measured I-V curve.

IECNORM.COM : Click to view the full PDF of IEC TS 62257-9-5:2016 RLV
Withdrawn

– The spreadsheet or program shall scale the interpolated I-V curve for each level of simulated solar irradiance listed in Table R.2 by multiplying the interpolated current values by the ratio of the desired solar irradiance level to 1 000 W/m^2:

$$I_{pv}(V) = I_{interp}(V) \times \frac{G}{1\,000\ W/m^2}$$

where

$I_{pv}(V)$ is the scaled, interpolated current at each solar irradiance level i and voltage V, in amperes (A);

$I_{interp}(V)$ is the interpolated current at TMOT and 1 000 W/m^2 at voltage V, in amperes (A);

G is the simulated solar irradiance, in watts per square metre (W/m^2).

– The spreadsheet or program shall use a non-linear minimization technique to minimize the weighted sum of the squared residuals between the scaled, interpolated TMOT I-V curve values and the simulated I-V curve of the PV simulator by altering the input variables. To give preference for close agreement near the maximum power point, the SSR at each point shall be weighted by the product of the duration of each solar irradiance step (from Table R.2) and the power in the scaled TMOT curve:

$$\text{weighted SSR} = \sum_G \left(\Delta t_G \cdot \sum_V I_{pv,G}(V) \cdot V \cdot \left(I_{fit,G}(V) - I_{pv,G}(V) \right)^2 \right)$$

where

G is the simulated solar irradiance, in watts per square metre (W/m^2);

Δt_G is the duration corresponding to each solar irradiance level i, in hours (h);

V is the voltage at each point in the interpolated I-V curve, in volts (V);

$I_{pv,G}(V)$ is the scaled, interpolated current at solar irradiance level G and voltage V, in amperes (A);

$I_{fit,G}(V)$ is the fitted simulated current at solar irradiance level G and voltage V, in amperes (A);

– The outcomes of the spreadsheet or program are the best fit input variables:

- series resistance (R_s);
- parallel resistance (R_p);
- voltage setpoint (V_{sim});
- current setpoints ($I_{sim,1000}$, $I_{sim,900}$, $I_{sim,700}$, $I_{sim,500}$, $I_{sim,300}$).

b) Build a PV simulator circuit as in Figure R.1 using fixed or variable resistors with appropriate power ratings wired in parallel and series with the power supply. Use a resistance meter or multimeter to verify that the actual resistance values meet the accuracy requirement in Table CC.2.

c) For each simulated solar irradiance level, check that the simulated I-V curve is a reasonable approximation of the true curve by calculating the deviation ratio between the simulated and scaled, interpolated TMOT I-V curves. The deviation ratio is defined as the simulated current divided by the scaled, interpolated TMOT current at each voltage point. For this calculation, use the true values of the input variables rounded to the precision of the test equipment. In the example below (Figure R.2), the deviation ratio is close to unity (between 0,95 and 1,05, or less than 5 % error) in the key parts of the I-V curve (at and to the left of the maximum power point).

IECNORM.COM : Click to view the full PDF of IEC TS 62257-9-5:2016 RLV
Withdrawn

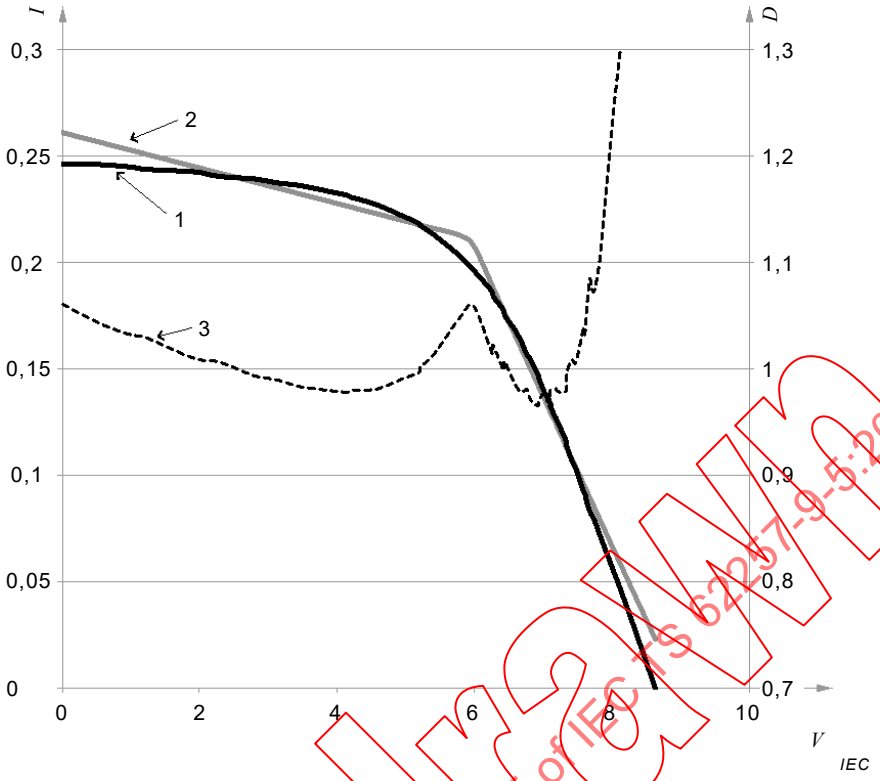

Key

I is current with units of amperes on the primary vertical axis

V is voltage with units of volts on the horizontal axis

D is the deviation ratio (unitless) on the secondary vertical axis

1 is the measured "true" I-V curve, plotted on the primary axis

2 is the I-V curve from the PV simulator ($I_{fit,c}(V)$), plotted on the primary axis

3 is the deviation ratio as a function of voltage, plotted on the secondary axis

Figure R.2 – Example "true" and simulated I-V curves plotted with the deviation ratio

d) (optional step) Experimentally verify the calculated deviation for the 1 000 W/m^2 I-V curve, using the following procedure. Alternatively, the I-V curve analyser specified in Annex Q may be used to trace the I-V curve of the simulated solar module.

   1) Connect data-logging current and voltage sensors to the PV simulator output. Set the sensors to log data at very short intervals, 1 s or less.

e) Simulate a PV module at TMOT and 1 000 W/m^2. Set the power supply current and voltage setpoints to $I_{sim,1000}$ and V_{sim}.

f) Measure an I-V curve for the PV simulator. Connect a variable resistor between the positive and negative terminals of the PV simulator and slowly sweep from high to low resistance and back.

g) Disconnect the resistor and stop the data collection.

h) Check to ensure the quality of the I-V curve data; cross check with the original (target) I-V curve to ensure the PV simulator is reasonably close, particularly in the region with voltages slightly below the maximum power point. Figure R.2 shows an example comparison. The true I-V curve (line 1) is compared to the simulated I-V curve (line 2).

i) Set up the prepared DUT (see requirements in R.4.2.2) and PV simulator circuit with current and voltage sensors, ensuring the PV simulator circuit is connected such that it replaces only the part of the PV module assembly included in the I-V curve (i.e. the PV simulator circuit is connected at the same point the I-V curve data were measured). Set the data-logging interval to 1 minute or less. Record the following quantities:

   – current entering the DUT's battery(-ies), in amperes (A);

IECNORM.COM : Click to view the full PDF of IEC TS 62257-9-5:2016 RLV
Withdrawn

- voltage across the DUT's battery(-ies), in volts (V);
- current provided by the PV simulator circuit, in amperes (A);
- voltage across the PV simulator circuit output, in volts (V).

j) Program the power supply to simulate a "standard solar day" of charging using the steps indicated below (Table R.2). To facilitate identification of solar irradiance levels during data analysis, short pauses at 0 volts may be inserted between steps.

Table R.2 – Simulated solar day power supply settings

Step duration h	Simulated solar irradiance W/m²	Current setpoint	Voltage setpoint
0,5	300	$I_{sim,300}$	V_{sim}
0,5	500	$I_{sim,500}$	V_{sim}
1	700	$I_{sim,700}$	V_{sim}
1	900	$I_{sim,900}$	V_{sim}
1	1 000	$I_{sim,1000}$	V_{sim}
1	900	$I_{sim,900}$	V_{sim}
1	700	$I_{sim,700}$	V_{sim}
0,5	500	$I_{sim,500}$	V_{sim}
0,5	300	$I_{sim,300}$	V_{sim}

k) The DUT's battery voltage shall be continuously monitored such that the battery voltage shall not exceed a safety limit, either relying on the internal charge controller or based on the judgement of the laboratory. If necessary, integrate the overcharge protection disconnect device into the setup. The overcharge protection device shall disconnect if battery voltage rises above safety limits that are determined by the laboratory. Refer to the battery recommended testing practices (Annex L) for recommended maximum battery testing voltage values (refer to Table L.2). Optionally, monitor the DUT's battery temperature to ensure that it does not exceed Table L.2. If temperature monitoring is used, lithium-based batteries shall not be allowed to exceed 45 °C unless higher temperatures are allowed by the battery manufacturer. If the charge cycle is stopped by an overcharge or overtemperature protection device added by the test laboratory, the test results shall be considered invalid.

l) Check the connections and setpoints, then begin data logging and start the simulated charging cycle. Caution: Do not disconnect the product after having started the simulated charging cycle. The electronics of some DUTs can be damaged if their batteries are disconnected while voltage is applied to the PV input.

m) After the 7 h charging cycle is complete, stop the power supply, stop the data logging, disconnect the product from the PV simulator, and verify that the current and voltage data are valid with a quick check.

R.4.3 Test method using a solar array simulator (SAS)

R.4.3.1 Equipment requirements

The following equipment is required. Equipment shall meet the requirements in Table CC.2.

- Solar array simulator meeting the accuracy requirement specified in Table CC.2, including footnote a.
- Voltage data loggers (one for the DUT's PV input and one for each of the DUT's batteries).
- Current data loggers (e.g. voltage data logger and current transducer) (one for the DUT's PV input and one for each battery).

NOTE Most DUTs have only one battery.

IECNORM.COM : Click to view the full PDF of IEC TS 62257-9-5:2016 RLV
Withdrawn

- Surface-mounted thermocouple(s) and a thermocouple reader or other suitable surface-mounted temperature measurement devices (optional).
- Overcharge disconnect device that will stop a DUT's discharge when the DUT's battery reaches a specified voltage (if necessary).

If the solar array simulator includes data-logging functionality, this functionality may be used instead of the voltage and current data loggers at the PV input, provided the accuracy and resolution requirements for data loggers (Table CC.2) are met.

R.4.3.2 Test prerequisites

The test prerequisites are identical to those for the test method using a resistor network (R.4.2.2).

R.4.3.3 Apparatus

The apparatus is identical to that for the test method using a resistor network (R.4.2.3), except the PV simulator circuit (item 1 in Figure R.1) is replaced with a solar array simulator.

R.4.3.4 Procedure

The following steps shall be followed.

a) Configure the solar array simulator to simulate the DUT's I-V curve at TMOT.

b) If the solar array simulator does not meet the accuracy requirement described in Table CC.2 according to the manufacturer's specifications, measure the simulator's I-V curve and verify that the simulated current is within the tolerance specified in Table CC.2 for all applicable voltage values. If the measured current is not within the specified tolerance, the solar array simulator shall not be used for this DUT. If the solar array simulator meets the accuracy requirement described in Table CC.2 according to the manufacturer's specifications, this step is optional.

c) Set up the prepared DUT (see requirements in R.4.3.2) and PV simulator circuit with current and voltage sensors, ensuring the PV simulator circuit is connected such that it replaces only the part of the PV module assembly included in the I-V curve (i.e. the PV simulator circuit is connected at the same point the I-V curve data were measured). Set the data-logging interval to 1 minute or less. Record the following quantities:
   - Current entering the DUT's battery(s), in amperes (A).
   - Voltage across the DUT's battery(s), in volts (V).
   - Current provided by the PV simulator circuit, in amperes (A).
   - Voltage across the PV simulator circuit output, in volts (V).

d) Program the solar array simulator to simulate a "standard solar day" of charging using the steps indicated in Table R.2. To facilitate identification of solar irradiance levels during data analysis, short pauses at 0 volts may be inserted between steps. Adjust the curve to the reduced solar irradiance levels by adjusting the current only, according to the following formula:

$$I_{SAS} = I_{TMOT} \cdot \frac{G_{sim}}{G_{TMOT}}$$

where

I_{SAS} is the current at each point on the simulated I-V curve, in amperes (A);

I_{TMOT} is the current at each point on the measured I-V curve, adjusted to TMOT, in amperes (A);

G_{sim} is the simulated solar irradiance from Table R.2, in watts per square metre (W/m^2).

G_{TMOT} is the solar irradiance at TMOT (1 000 W/m^2).

IECNORM.COM : Click to view the full PDF of IEC TS 62257-9-5:2016 RLV
Withdrawn