IEC TS 62910

Edition 2.0 2020-07
REDLINE VERSION

TECHNICAL SPECIFICATION

colour inside

Utility-interconnected photovoltaic inverters – Test procedure for ~~low~~ under voltage ride-through measurements

IECNORM.COM : Click to view the full PDF of IEC TS 62910:2020 RLV

IEC TS 62910:2020-07 RLV(en)

THIS PUBLICATION IS COPYRIGHT PROTECTED
Copyright © 2020 IEC, Geneva, Switzerland

All rights reserved. Unless otherwise specified, no part of this publication may be reproduced or utilized in any form or by any means, electronic or mechanical, including photocopying and microfilm, without permission in writing from either IEC or IEC's member National Committee in the country of the requester. If you have any questions about IEC copyright or have an enquiry about obtaining additional rights to this publication, please contact the address below or your local IEC member National Committee for further information.

IEC Central Office
3, rue de Varembé
CH-1211 Geneva 20
Switzerland

Tel.: +41 22 919 02 11
info@iec.ch
www.iec.ch

About the IEC
The International Electrotechnical Commission (IEC) is the leading global organization that prepares and publishes International Standards for all electrical, electronic and related technologies.

About IEC publications
The technical content of IEC publications is kept under constant review by the IEC. Please make sure that you have the latest edition, a corrigendum or an amendment might have been published.

IEC publications search - webstore.iec.ch/advsearchform
The advanced search enables to find IEC publications by a variety of criteria (reference number, text, technical committee,…). It also gives information on projects, replaced and withdrawn publications.

IEC Just Published - webstore.iec.ch/justpublished
Stay up to date on all new IEC publications. Just Published details all new publications released. Available online and once a month by email.

IEC Customer Service Centre - webstore.iec.ch/csc
If you wish to give us your feedback on this publication or need further assistance, please contact the Customer Service Centre: sales@iec.ch.

Electropedia - www.electropedia.org
The world's leading online dictionary on electrotechnology, containing more than 22 000 terminological entries in English and French, with equivalent terms in 16 additional languages. Also known as the International Electrotechnical Vocabulary (IEV) online.

IEC Glossary - std.iec.ch/glossary
67 000 electrotechnical terminology entries in English and French extracted from the Terms and Definitions clause of IEC publications issued since 2002. Some entries have been collected from earlier publications of IEC TC 37, 77, 86 and CISPR.

IECNORM.COM : Click to view the full PDF of IEC TS 62910:2020 RLV

IEC TS 62910

Edition 2.0 2020-07
REDLINE VERSION

TECHNICAL SPECIFICATION

colour inside

Utility-interconnected photovoltaic inverters – Test procedure for ~~low~~ under voltage ride-through measurements

IECNORM.COM : Click to view the full PDF of IEC TS 62910:2020 RLV

INTERNATIONAL
ELECTROTECHNICAL
COMMISSION

ICS 27.160

ISBN 978-2-8322-8736-1

Warning! Make sure that you obtained this publication from an authorized distributor.

® Registered trademark of the International Electrotechnical Commission

CONTENTS

FOREWORD 4
1 Scope 7
2 Normative references 7
3 Terms, definitions, symbols and abbreviated terms 7
3.1 Terms, definitions and symbols 7
3.2 Abbreviated terms 10
4 Test circuit and equipment 10
4.1 General 10
4.2 Test circuit 10
4.3 Test equipment 11
4.3.1 Measuring instruments 11
4.3.2 DC source 11
4.3.3 Short-circuit emulator 11
4.3.4 Converter based grid simulator 14
5 Test 14
5.1 Test protocol 14
5.2 Test curve 16
5.3 Test procedure 17
5.3.1 Pre-test 17
5.3.2 No-load test 17
5.3.3 Tolerance 17
5.3.4 Load test 17
6 Assessment criteria 18
Annex A (informative) Circuit faults and voltage drops 19
A.1 Fault types 19
A.2 Voltage drops 21
A.2.1 General 21
A.2.2 Three-phase short-circuit fault 22
A.2.3 Two-phase short-circuit fault with ground 22
A.2.4 Two-phase short-circuit fault without ground 23
A.2.5 Single-phase short-circuit fault with ground 24
Annex B (informative) Determination of critical performance values in ~~LVRT~~ UVRT testing 26
B.1 General 26
B.2 Drop depth ratio 26
B.3 Ride-through time 26
B.4 Reactive current 26
B.5 Active power 27
Annex C (informative) Requirements of the UVRT curve 28
C.1 General 28
C.2 UVRT curve 28
C.3 Test points 28
Bibliography 29

Figure 1 – Testing circuit diagram 10

IECNORM.COM : Click to view the full PDF of IEC TS 62910:2020 RLV

Figure 2 – Short-circuit emulator 12
Figure 3 – Converter device example 14
Figure 4 – ~~LVRT~~ UVRT curve example 16
Figure 5 – Tolerance of voltage drop 17
Figure A.1 – Grid fault diagram 21
Figure A.2 – Diagram of voltage vector for three-phase short-circuit fault 22
Figure A.3 – Diagram of voltage vector of two-phase (BC) short-circuit fault with ground 23
Figure A.4 – Diagram of voltage vector of two-phase (BC) short-circuit fault 24
Figure A.5 – Diagram of voltage vector of single-phase (A) short-circuit fault with ground 25
Figure B.1 – Determination of reactive current output 27
Figure B.2 – Determination of active power recovery 27
Figure C.1 – The typical curve of UVRT 28

Table 1 – Accuracy of measurements 11
Table 2 – Fault type and switch status 13
Table 3 – Test specification for ~~LVRT~~ UVRT (Indicative) 15
Table A.1 – Short-circuit paths for different fault types 19
Table A.2 – Amplitude and phase changes in three-phase short-circuit fault 22
Table A.3 – Amplitude and phase changes in two-phase (BC) ~~short-circuit fault with ground~~ 23
Table A.4 – Amplitude and phase changes in two-phase (BC) short-circuit fault 24
Table A.5 – Amplitude and phase changes in single-phase (A) ~~short-circuit fault with ground~~ 25

IECNORM.COM : Click to view the full PDF of IEC TS 62910:2020 RLV

INTERNATIONAL ELECTROTECHNICAL COMMISSION

UTILITY-INTERCONNECTED PHOTOVOLTAIC INVERTERS – TEST PROCEDURE FOR ~~LOW~~ UNDER VOLTAGE RIDE-THROUGH MEASUREMENTS

FOREWORD

1) The International Electrotechnical Commission (IEC) is a worldwide organization for standardization comprising all national electrotechnical committees (IEC National Committees). The object of IEC is to promote international co-operation on all questions concerning standardization in the electrical and electronic fields. To this end and in addition to other activities, IEC publishes International Standards, Technical Specifications, Technical Reports, Publicly Available Specifications (PAS) and Guides (hereafter referred to as "IEC Publication(s)"). Their preparation is entrusted to technical committees; any IEC National Committee interested in the subject dealt with may participate in this preparatory work. International, governmental and non-governmental organizations liaising with the IEC also participate in this preparation. IEC collaborates closely with the International Organization for Standardization (ISO) in accordance with conditions determined by agreement between the two organizations.

2) The formal decisions or agreements of IEC on technical matters express, as nearly as possible, an international consensus of opinion on the relevant subjects since each technical committee has representation from all interested IEC National Committees.

3) IEC Publications have the form of recommendations for international use and are accepted by IEC National Committees in that sense. While all reasonable efforts are made to ensure that the technical content of IEC Publications is accurate, IEC cannot be held responsible for the way in which they are used or for any misinterpretation by any end user.

4) In order to promote international uniformity, IEC National Committees undertake to apply IEC Publications transparently to the maximum extent possible in their national and regional publications. Any divergence between any IEC Publication and the corresponding national or regional publication shall be clearly indicated in the latter.

5) IEC itself does not provide any attestation of conformity. Independent certification bodies provide conformity assessment services and, in some areas, access to IEC marks of conformity. IEC is not responsible for any services carried out by independent certification bodies.

6) All users should ensure that they have the latest edition of this publication.

7) No liability shall attach to IEC or its directors, employees, servants or agents including individual experts and members of its technical committees and IEC National Committees for any personal injury, property damage or other damage of any nature whatsoever, whether direct or indirect, or for costs (including legal fees) and expenses arising out of the publication, use of, or reliance upon, this IEC Publication or any other IEC Publications.

8) Attention is drawn to the Normative references cited in this publication. Use of the referenced publications is indispensable for the correct application of this publication.

9) Attention is drawn to the possibility that some of the elements of this IEC Publication may be the subject of patent rights. IEC shall not be held responsible for identifying any or all such patent rights.

This redline version of the official IEC Standard allows the user to identify the changes made to the previous edition. A vertical bar appears in the margin wherever a change has been made. Additions are in green text, deletions are in strikethrough red text.

IECNORM.COM : Click to view the full PDF of IEC TS 62910:2020 RLV

The main task of IEC technical committees is to prepare International Standards. In exceptional circumstances, a technical committee may propose the publication of a Technical Specification when

- the required support cannot be obtained for the publication of an International Standard, despite repeated efforts, or
- the subject is still under technical development or where, for any other reason, there is the future but no immediate possibility of an agreement on an International Standard.

Technical Specifications are subject to review within three years of publication to decide whether they can be transformed into International Standards.

IEC TS 62910, which is a technical specification, has been prepared by IEC technical committee 82: Solar photovoltaic energy systems.

This second edition cancels and replaces the first edition issued in 2015, and constitutes a technical revision.

It remains a TS because it is limited to providing recommended practices for UVRT testing in the context of non-uniform grid-codes lacking international consensus, and the rapid development of test technology in recent years.

The main technical changes with regard to the previous edition are as follows:

Clause	Previous edition	Present edition
3.1.12	the voltage support of EUT in accordance with the voltage drops. The K-factor is to be specified by the EUT manufacturer	the K-factor is to be supplied by the EUT manufacturer meeting additional requirements imposed by national standards and/or local codes
Figure 2	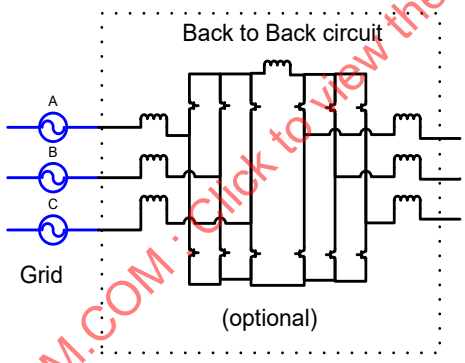	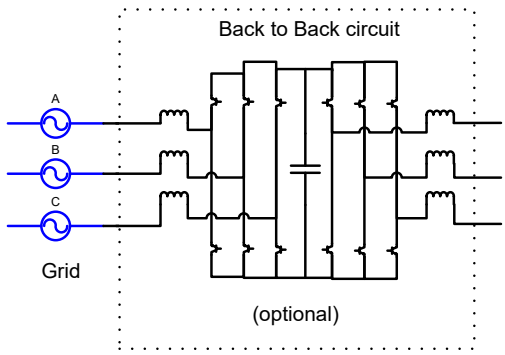
4.3.4	The test circuit essentially comprises a voltage source with a low internal resistance combined with broadband amplifiers.....	The test circuit essentially comprises a voltage source with a low internal resistance combined optionally with broadband amplifiers.....
Table 3	d The test should be carried out under specified K-factor provided by local manufacture.	d The test should be carried out under specified K-factor provided by manufacture meeting additional requirements imposed by national standards and/or local codes.
Figure 4	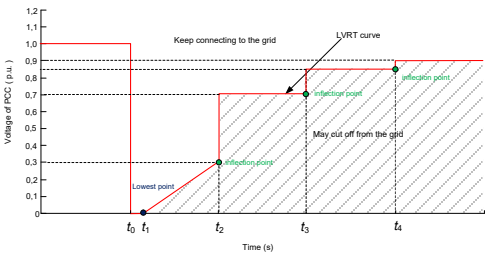	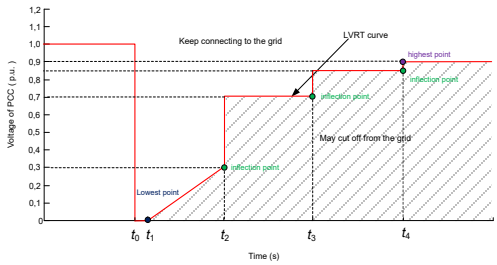

IECNORM.COM : Click to view the full PDF of IEC TS 62910:2020 RLV

5.2	NOTE The example shows two types of points on the UVRT curve: the lowest point and the inflection point. Tests must be carried out at both types of points	The example shows three types of points on the UVRT curve: the highest point, the lowest point and the inflection point. Tests shall be carried out at above types of points.
5.3.1	Prior to the fault simulation tests, the EUT should run in normal operating mode. The selected UVRT curve should be used to identify voltage drop points, including the lowest point and the inflection point, ...	Prior to the fault simulation tests, the EUT should run in normal operating mode. The selected UVRT curve should be used to identify voltage drop points, including the highest point, the lowest point and the inflection point, ...

The text of this Technical Specificationis based on the following documents:

Draft TS	Report on voting
82/1607/DTS	82/1640A/RVDTS

Full information on the voting for the approval of this Technical Specification can be found in the report on voting indicated in the above table.

This document has been drafted in accordance with the ISO/IEC Directives, Part 2.

The committee has decided that the contents of this document will remain unchanged until the stability date indicated on the IEC website under "http://webstore.iec.ch" in the data related to the specific document. At this date, the document will be

- reconfirmed,
- withdrawn,
- replaced by a revised edition, or
- amended.

IMPORTANT – The 'colour inside' logo on the cover page of this publication indicates that it contains colours which are considered to be useful for the correct understanding of its contents. Users should therefore print this document using a colour printer.

IECNORM.COM : Click to view the full PDF of IEC TS 62910:2020 RLV

UTILITY-INTERCONNECTED PHOTOVOLTAIC INVERTERS – TEST PROCEDURE FOR ~~LOW~~ UNDER VOLTAGE RIDE-THROUGH MEASUREMENTS

1 Scope

This document provides a test procedure for evaluating the performance of ~~Low~~ Under Voltage Ride-Through (~~LVRT~~ UVRT) functions in inverters used in utility-interconnected Photovoltaic (PV) systems.

This document is most applicable to large systems where PV inverters are connected to utility high voltage (HV) distribution systems. However, the applicable procedures may also be used for low voltage (LV) installations in locations where evolving ~~LVRT~~ UVRT requirements include such installations, e.g. single-phase or 3-phase systems.

The assessed ~~LVRT~~ UVRT performance is valid only for the specific configuration and operational mode of the inverter under test. Separate assessment is required for the inverter in other factory or user-settable configurations, as these may cause the inverter ~~LVRT~~ UVRT response to behave differently.

The measurement procedures are designed to be as non-site-specific as possible, so that ~~LVRT~~ UVRT characteristics measured at one test site, for example, can also be considered valid at other sites.

This document is for testing of PV inverters, though it contains information that may also be useful for testing of a complete PV power plant consisting of multiple inverters connected at a single point to the utility grid. It further provides a basis for utility-interconnected PV inverter numerical simulation and model validation.

2 Normative references

The following documents are referred to in the text in such a way that some or all of their content constitutes requirements of this document. For dated references, only the edition cited applies. For undated references, the latest edition of the referenced document (including any amendments) applies.

~~IEC 61400-21:2008, *Wind turbines – Part 21: Measurement and assessment of power quality characteristics of grid connected wind turbines*~~

IEC TS 61836, *Solar photovoltaic energy systems – Terms, definitions and symbols*

3 Terms, definitions, symbols and abbreviated terms

3.1 Terms, definitions and symbols

For the purposes of this document, the terms and definitions in IEC TS 61836 and ~~symbols~~ the following apply.

ISO and IEC maintain terminological databases for use in standardization at the following addresses:

- IEC Electropedia: available at http://www.electropedia.org/

IECNORM.COM : Click to view the full PDF of IEC TS 62910:2020 RLV

- ISO Online browsing platform: available at http://www.iso.org/obp

3.1.1
drop depth
magnitude of voltage drop during a fault or simulated fault, as a percentage of the nominal supply voltage

3.1.2
double drop
sudden decline of the nominal voltage to a value below 90 % of the voltage of point of common coupling (PCC), followed after a short time by a voltage recovery, which ~~happened~~ happens twice

Note 1 to entry: Voltage changes which do not reduce the voltage to below 90 % of the voltage of PCC are not considered to be voltage drops.

3.1.3
equipment under test
EUT
equipment on which these tests are performed and refers to the utility-interconnected PV inverter. During test period, EUT is connected with PV simulator instead of real PV modules on the direct current (DC) side, while alternating current (AC) side is connected with grid

~~**3.1.4**~~
~~**IT system**~~
~~IT power system has all live parts isolated from earth or one point connected to earth through an impedance. The exposed conductive parts of the electrical installation are earthed independently or collectively or to the earthing of the system~~

~~[SOURCE: IEC 60364-1:2005, 312.2.3]~~

3.1.4
I_q
output reactive current of EUT

3.1.5
~~**low**~~ **under voltage ride through**
~~**LVRT**~~ **UVRT**
capability of an inverter to continue generating power to connected loads during a limited duration loss or drop of grid voltage

~~**3.1.7**~~
~~**maximum MPP voltage**~~
~~maximum voltage at which the EUT can convert its rated power under MPPT conditions~~

~~[SOURCE: EN 50530:2010]~~

3.1.6
maximum power point tracking
MPPT
control strategy of operation at maximum power point or nearby

~~**3.1.9**~~
~~**minimum MPP voltage**~~
~~minimum voltage at which the EUT can convert its rated power under MPPT conditions~~

~~[SOURCE: EN 50530:2010]~~

IECNORM.COM : Click to view the full PDF of IEC TS 62910:2020 RLV

3.1.7
N_{EUT}
access point of the EUT during the test

3.1.8
P_N
rated power of EUT

3.1.9
point of common coupling
PCC
point of a power supply network, electrically nearest to a particular load, at which other loads are, or may be, connected

Note 1 to entry: These loads can be either devices, equipment or system, or distinct customer's installations.

Note 2 to entry: In some applications, the term "point of common coupling" is restricted to public networks.

[SOURCE: IEC 60050-161:1990, 161-07-15]

3.1.10
proportionality constant K
K-factor
~~voltage support of EUT in accordance with the voltage drops. the K-factor is to be specified by the EUT manufacturer.~~
the K-factor is to be supplied by the EUT manufacturer meeting additional requirements imposed by national standards and/or local codes

3.1.11
PV array simulator
simulator that has I-V characteristics equivalent to a PV array

~~**3.1.15**~~
~~**PV simulator MPP voltage**~~
~~$U_{MPP, PVS}$~~
~~MPP voltage of the setting PV curve that is provided by the PV simulator~~

3.1.12
S_{EUT}
apparent short-circuit power at N_{EUT}

$S_{EUT} = I_{sc} \times U_N$; I_{sc} refer to short-circuit current at N_{EUT} during the no-load test

3.1.13
single drop
sudden decline of the nominal voltage to a value below 90 % of the voltage of PCC, followed after a short time by a voltage recovery, which ~~happened~~ happens once

Note 1 to entry: Voltage changes which do not reduce the voltage to below 90 % of the voltage of PCC are not considered to be voltage drops.

3.1.14
Z_{grid}
grid short-circuit impedance value of the ~~MP1~~ main point (MP) 1 (see Figure 1)

3.1.15
Z_i
impedance value between the fault point and PCC

IECNORM.COM : Click to view the full PDF of IEC TS 62910:2020 RLV

3.1.16
Z_p
impedance value between the fault point and EUT

3.2 Abbreviated terms

AC alternating current
A/D analog to digital
DC direct current
EUT equipment under test
HV high voltage
LV low voltage
MV middle voltage
PV photovoltaic
RMS root mean square
UVRT under voltage ride through

4 Test circuit and equipment

4.1 General

The circuits and equipment described in this clause are developed to allow tests that simulate the full range of anticipated grid faults, including:

- Single phase to ground fault (any phase).
- Two phase isolated fault, between any two phases.
- Two phase grounded fault, involving any two phases.
- Three phase short-circuit fault.

A full discussion of these faults and the resulting impact on voltage magnitude and phase angles is included in Annex A.

The short circuit emulator and grid simulator described in 4.3.3 and 4.3.4 are informative examples and are not intended to restrict design flexibility. Other designs may be used to achieve equivalent test functionality.

4.2 Test circuit

The ~~LVRT~~ UVRT test circuit includes a DC source, the EUT, a grid fault simulator and the grid. A PV simulator (or PV array) provides input energy for the EUT. The output of the EUT is connected to the grid via a grid fault simulator, as shown in Figure 1.

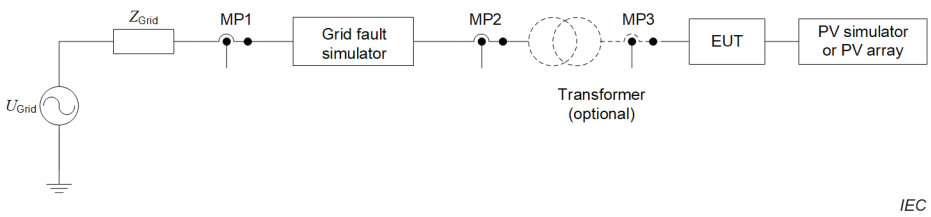

NOTE MP1 is the measurement point between the grid and the grid fault simulator; MP2 is the measurement point at the high voltage side of the transformer; MP3 is the measurement point at the low voltage side of the transformer.

Figure 1 – Testing circuit diagram

IECNORM.COM : Click to view the full PDF of IEC TS 62910:2020 RLV

4.3 Test equipment

4.3.1 Measuring instruments

Waveforms shall be measured by a device with memory function, for example, a storage or digital oscilloscope, or a high speed data acquisition device. Accuracy of the oscilloscope or data acquisition system should be at least 0,2 % of full scale. The analogue to A/D of the measurement device shall have at least 12 bit resolution (in order to maintain the required measurement accuracy).

~~Voltage transducers (or~~ Voltage transformers~~)~~ and current~~ transducers (or current~~ transformers~~)~~ are the required sensors for measurement. The accuracy of the transducers should be 0,5 % of full scale or better. It is necessary to select the transducer measuring range depending on the normal value of the signal to be measured. The selected measuring range shall not exceed 150 % of the normal value of the measured signal. The transducer accuracy requirements are shown in Table 1.

Table 1 – Accuracy of measurements

Measurement device	Accuracy	
Data acquisition device	0,2 %	full scale
Voltage ~~transducer~~ transformer	0,5 %	full scale
Current ~~transducer~~ transformer	0,5 %	full scale

4.3.2 DC source

A PV array, PV array simulator or controlled DC source with PV characteristics may be used as the DC power source to supply input energy for the ~~LVRT~~ UVRT test. As the EUT input source, the DC power source shall be capable of supplying the EUT maximum input power and other power levels during the test, at minimum and maximum input operating voltages of the EUT.

The PV simulator should emulate the current/voltage characteristic of the PV module or PV array for which the EUT is designed. The response time of a PV simulator should not be longer than the MPP tracking response time of EUT.

For a EUT under test without galvanic isolation between the DC side and AC side, the output of the PV simulator shall not be earthed.

The equivalent capacitance between the output of the PV simulator and earth should be as low as possible in order to minimize the impact on the EUT.

A PV array used as the EUT input source shall be capable of matching the EUT input power levels specified by the test conditions. It is necessary to select a period of time in which the solar irradiance is stable and does not vary more than 5 % during the test.

4.3.3 Short-circuit emulator

As part of the grid simulator device, the short-circuit emulator is used to create the voltage drops due to short-circuits between the two or three phases, or between one or two phases to ground, via the impedance network Z_1 and Z_2 as shown in the test device layout in Figure 2.

IECNORM.COM : Click to view the full PDF of IEC TS 62910:2020 RLV

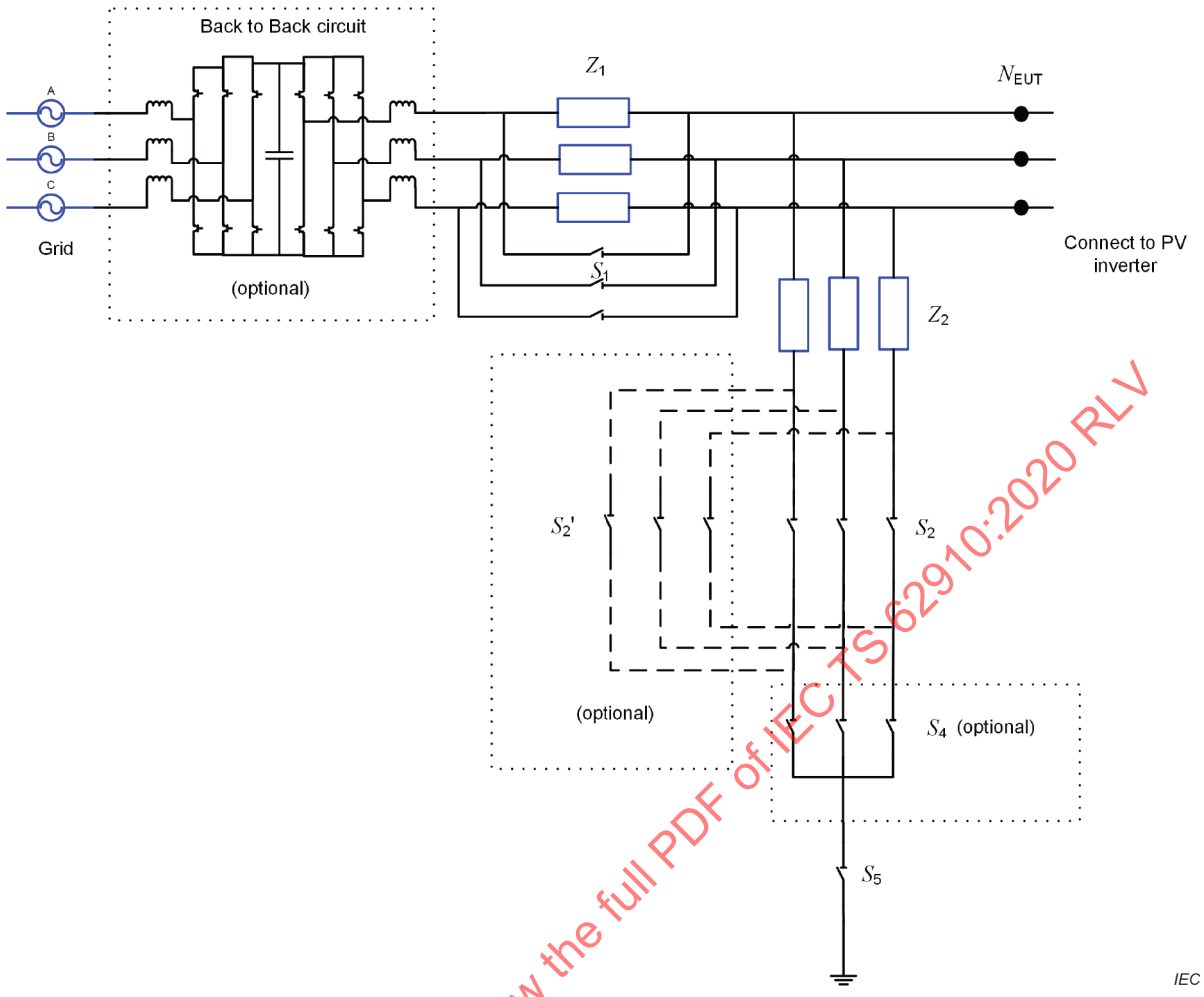

Figure 2 – Short-circuit emulator

The impedance Z_1 is used to limit the effect of the short circuit on the utility service that powers the test circuit. The sizing of Z_1 shall therefore account for all test sequences to be performed and limit the short-circuit current taken from the grid to values that do not cause an excessive reduction of the grid voltage. Considering an acceptable voltage reduction of at most 5 % when performing the test, the minimum value of Z_1 shall be at least 20 × Z_{Grid}, where Z_{Grid} is the grid short-circuit impedance measured at the test circuit connection point.

To ensure that the test is realistic, however, the apparent short-circuit power (S_{EUT}) available at the EUT connection node N_{EUT} should be at least equal to 3×Pn, where Pn is the rated power of the EUT (minimum value $S_{EUT} > 3 \times Pn$, recommended ~~$S_{EUT} = 5$ to $6 \times Pn$~~ $5 \times Pn < S_{EUT} < 6 \times Pn$). This means during the short-circuit tests, the contribution of current through Z_1 and Z_2 from the grid remains dominant compared to the current contributed by the EUT. In this way, the inverter current does not create a significant voltage rise for the duration of the test relative to the no-load drop.

The two conditions described above define the minimum and maximum limits of Z_1. The two conditions combined also define the limit criteria for the choice of a grid infrastructure suitable for performing the test with the impedance circuit. If the grid infrastructure cannot meet above requirements, an alternative test circuit utilizing a back-to-back converter is allowed, as shown in Figure 2 may be added to reduce the grid short-circuit impedance Z_{Grid}.

IECNORM.COM : Click to view the full PDF of IEC TS 62910:2020 RLV

Generally, the X/R value of inductor Z_1 and Z_2 for the short-circuit emulator may close to the transmission line impedance values for different countries and regions. It is also appropriate that the inductive impedances Z_1 and Z_2 should be characterised by an X/R ratio equal to at least 3, in order to reproduce the typical minimum values of X/R found in HV as well as MV power lines.

NOTE 1 X: Equivalent impedance of inductor.

NOTE 2 R: Equivalent resistance of inductor.

A bypass connection (Switch S_1) of Z_1 is usually used to prevent overheating of the impedance Z_1 before and after the execution of each test sequence.

The voltage drop is created by connecting the impedance Z_2 by the switch S_2. If the voltage drop is required to be created twice in a short period (for double drop tests), a parallel switch S_2' is normally used. The value of $Z_2/(Z_1 + Z_2 + Z_{Grid})$ shall be adjusted to the required voltage magnitudes. For example, when the required voltage magnitude is 50 % of the rated voltage, the value of $Z_2/(Z_1 + Z_2 + Z_{Grid})$ should be about 0,5.

The switch S_2 shall be able to accurately control the time between connection and disconnection of Z_2 for single phase, two-phase or three-phase tests. If the phase of switch S_2 cannot be independently controlled, the serial switch B_1 may be used to choose the fault phase. B_2 is used to select whether the fault is to earth or not. All switches may be either mechanical circuit breakers or power electronic devices.

The status of switch B_1 and B_2 should be set before performing the test. The status of switches corresponding to fault types is shown in Table 2.

The test report shall specify the values of impedances Z_1 and Z_2, the related X/R ratio, and a description of the circuit used. In addition, the grid short-circuit power available at the voltage level at which the test is performed shall be documented.

The status of switches and fault types are shown in Table 2.

Table 2 – Fault type and switch status

Fault type	Switch status			
	Phase A of B_1	Phase B of B_1	Phase C of B_1	B_2
Phase A to ground	Closed	Open	Open	Closed
Phase B to ground	Open	Closed	Open	Closed
Phase C to ground	Open	Open	Closed	Closed
Phase A and B to ground	Closed	Closed	Open	Closed
Phase B and C to ground	Open	Closed	Closed	Closed
Phase C and A to ground	Closed	Open	Closed	Closed
Phase A and B	Closed	Closed	Open	Open
Phase B and C	Open	Closed	Closed	Open
Phase C and A	Closed	Open	Closed	Open
Phase A, B and C	Closed	Closed	Closed	---

NOTE 1 During the period of voltage drop, S_1 should be opened first. S_2 should be closed after S_1 is opened. The time interval between the above two actions shall be very short.

NOTE 2 During the period of voltage recovery, S_2 should be opened first. S_1 should be closed after S_2 is opened. The time interval between the above two actions shall be very short.

IECNORM.COM : Click to view the full PDF of IEC TS 62910:2020 RLV

4.3.4 Converter based grid simulator

The test circuit mentioned in 4.3.3 is recommended for simulation of grid faults. However, if the test conditions cannot be met, an alternative test circuit utilizing a back-to-back converter is allowed, as shown in Figure 3.

The test circuit essentially comprises a voltage source with a low internal resistance combined optionally with broadband amplifiers (linear or forced switching type) capable of faithfully reproducing three sinusoidal voltages with controlled harmonic content, and adjustable amplitude, fundamental frequency and phase relationship within broad margins.

When the converter is used, it shall meet the following requirements:

a) It shall be capable of independently controlling the three phases in terms of amplitude and phase angle.

b) It shall incorporate impedances Z_A, Z_B and Z_C, that can be adjusted in order to reproduce the ohmic and inductive components of short-circuit impedances that are typical of the grid.

c) It shall be capable of reproducing the phase voltages and relative phase angles that occur on the LV side of transformers in the event of each of the various fault types. (See Annex A for the vector representations for each fault).

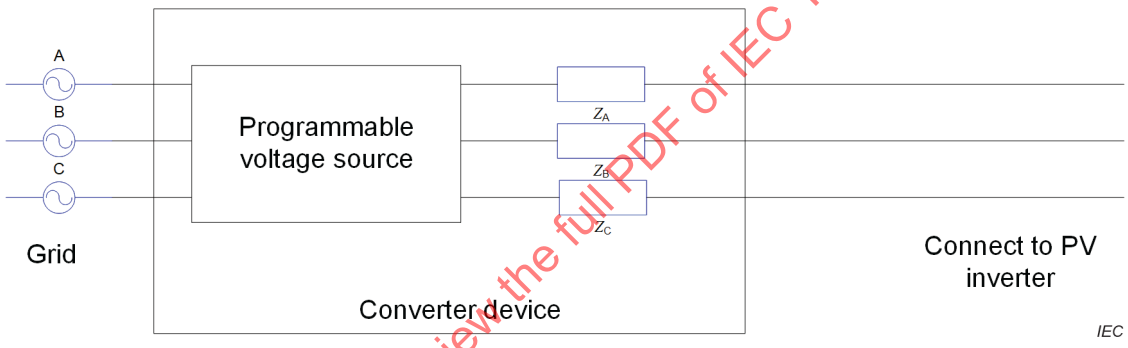

Figure 3 – Converter device example

If the programmable voltage source is a bi-directional, controlled output voltage type and is capable of replicating the influence of short-circuit impedances typical of the grid, the impedances Z_A, Z_B, Z_C may be omitted.

5 Test

5.1 Test protocol

The ~~LVRT~~ UVRT test protocol is designed to verify that the EUT responds appropriately to voltage drops (due to grid faults). During the test, the EUT shall demonstrate that it can:

- Appropriately detect the simulated fault.
- Ride through the event and continue operation as specified in the applicable curves.
- Not suffer any damage from the event.

~~NOTE~~ The required levels of active power and reactive power output during the voltage drop period may differ depending on the country local codes. The response to the voltage drop specified in Table 3 shall be recorded over the EUT operating period with two output power ranges:

a) between 0,1 P_n and 0,3 P_n;

b) above 0,9 P_n;

IECNORM.COM : Click to view the full PDF of IEC TS 62910:2020 RLV

and with two fault conditions:

c) three-phase drop;

d) two-phase drop or single-phase drop.

The tests should be carried out at least twice at each test point listed in Table 3.

Table 3 – Test specification for ~~LVRT~~ UVRT (Indicative)

Drop times	Drop depth[b]	Drop phase[c]	EUT output conditions[d]
Single drop	A_1	three-phase	Full load (above $0{,}9\ P_n$)
			Part load ($0{,}1\ P_n$ and $0{,}3\ P_n$)
		two-phase	Full load (above $0{,}9\ P_n$)
			Part load ($0{,}1\ P_n$ and $0{,}3\ P_n$)
		Two-phase to ground	Full load (above $0{,}9\ P_n$)
			Part load ($0{,}1\ P_n$ and $0{,}3 P_n$)
		Single-phase to ground	Full load (above $0{,}9\ P_n$)
			Part load ($0{,}1\ P_n$ and $0{,}3\ P_n$)
	...	three-phase	Full load (above $0{,}9\ P_n$)
			Part load ($0{,}1\ P_n$ and $0{,}3\ P_n$)
		two-phase	Full load (above $0{,}9\ P_n$)
			Part load ($0{,}1\ P_n$ and $0{,}3\ P_n$)
		Two-phase to ground	Full load (above $0{,}9\ P_n$)
			Part load ($0{,}1\ P_n$ and $0{,}3\ P_n$)
		Single-phase to ground	Full load (above $0{,}9\ P_n$)
			Part load ($0{,}1\ P_n$ and $0{,}3\ P_n$)
	A_n	three-phase	Full load (above $0{,}9\ P_n$)
			Part load ($0{,}1\ P_n$ and $0{,}3\ P_n$)
		two-phase	Full load (above $0{,}9\ P_n$)
			Part load ($0{,}1\ P_n$ and $0{,}3\ P_n$)
		Two-phase to ground	Full load (above $0{,}9\ P_n$)
			Part load ($0{,}1\ P_n$ and $0{,}3\ P_n$)
		Single-phase to ground	Full load (above $0{,}9\ P_n$)
			Part load ($0{,}1\ P_n$ and $0{,}3\ P_n$)
Double drop[a]	A_1	three-phase	Full load (above $0{,}9\ P_n$)
			Part load ($0{,}1\ P_n$ and $0{,}3\ P_n$)
		two-phase	Full load (above $0{,}9\ P_n$)
			Part load ($0{,}1\ P_n$ and $0{,}3\ P_n$)
		Two-phase to ground	Full load (above $0{,}9\ P_n$)
			Part load ($0{,}1\ P_n$ and $0{,}3\ P_n$)
		Single-phase to ground	Full load (above $0{,}9\ P_n$)
			Part load ($0{,}1\ P_n$ and $0{,}3\ P_n$)
	...	three-phase	Full load (above $0{,}9\ P_n$)
			Part load ($0{,}1\ P_n$ and $0{,}3\ P_n$)
		two-phase	Full load (above $0{,}9\ P_n$)
			Part load ($0{,}1\ P_n$ and $0{,}3\ P_n$)
		Two-phase to ground	Full load (above $0{,}9\ P_n$)
			Part load ($0{,}1\ P_n$ and $0{,}3\ P_n$)
		Single-phase to ground	Full load (above $0{,}9\ P_n$)
			Part load ($0{,}1\ P_n$ and $0{,}3\ P_n$)
	A_n	three-phase	Full load (above $0{,}9\ P_n$)
			Part load ($0{,}1\ P_n$ and $0{,}3\ P_n$)
		two-phase	Full load (above $0{,}9\ P_n$)

IECNORM.COM : Click to view the full PDF of IEC TS 62910:2020 RLV

Drop times	Drop depth[b]	Drop phase[c]	EUT output conditions[d]
			Part load (0,1 P_n and 0,3 P_n)
		Two-phase to ground	Full load (above 0,9 P_n)
			Part load (0,1 P_n and 0,3 P_n)
		Single-phase to ground	Full load (above 0,9 P_n)
			Part load (0,1 P_n and 0,3 P_n)

[a] Double drop test may be required in some countries or regions. For devices under test not being required for double drop test, above testing points can be omitted.

[b] Drop depth is the residual voltage during the ~~LVRT~~ UVRT testing period which can be decided according to the requirement specified by different countries or regions (See Annex B, Clause B.2 for drop depth ratio calculation).

[c] Drop phase can be decided according to the requirement specified by different countries or regions; the value of two-phase voltage should be line voltage.

[d] The test should be carried out under specified K-factor provided by ~~local manufacture~~ manufacturer meeting additional requirements imposed by national standards and/or local codes.

5.2 Test curve

The ~~LVRT~~ UVRT response characteristic shall meet the requirements of the ~~LVRT~~ UVRT curve specified by different countries and regions as needed (see also Annex C). An example ~~LVRT~~ UVRT curve is shown in Figure 4.

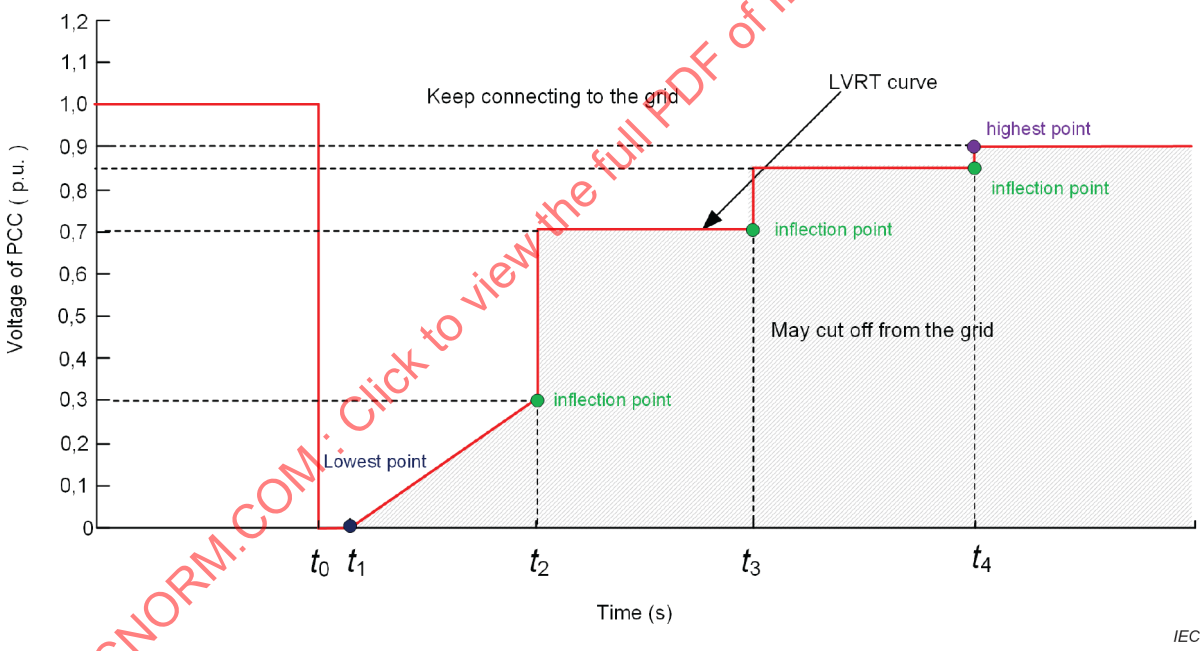

Figure 4 – ~~LVRT~~ UVRT curve example

The example curve shows that the EUT should keep operating during operating conditions indicated in the area above the ~~LVRT~~ UVRT curve. Specifically, the EUT should keep operating for (t_1-t_0) seconds without disconnecting from the grid when the interconnection voltage drops to 0 % of rated voltage; for (t_2-t_0) seconds when the voltage drops to 30 % of rated voltage; and for (t_3-t_0) seconds when the voltage drops to 70 % of rated voltage. The EUT should disconnect from the grid during operating conditions indicated within the shaded areas.

The example shows ~~two~~ three types of points on the ~~LVRT~~ UVRT curve: the highest point, the lowest point and the inflection point. Tests shall be carried out at ~~both~~ above types of points.

IECNORM.COM : Click to view the full PDF of IEC TS 62910:2020 RLV

5.3 Test procedure

5.3.1 Pre-test

Prior to the fault simulation tests, the EUT should run in normal operating mode. The selected ~~LVRT~~ UVRT curve should be used to identify voltage drop points, including the highest point, the lowest point and the inflection point, as well as other random points in the curve. Selection of the drop time should follow the requirement of the applicable country or region.

5.3.2 No-load test

Prior to the load test, adjust the fault emulator to simulate symmetrical and asymmetrical voltage drops without EUT connection, and validate that the measured results are as intended. This step ensures that the amplitude of voltage and drop duration can match the requirements in Figure 5.

5.3.3 Tolerance

The tolerances for drop depth and duration during the no-load test shall ~~reference~~ meet the requirement of ~~Figure 6 in IEC 61400-21:2008, and not exceed the values shown in~~ Figure 5.

The tolerance for voltage magnitude is ±5 % of rated voltage for the period before and during the voltage drop. The tolerance for voltage magnitude is ±10 % of rated voltage during the period after voltage is recovered. The tolerances ~~shall~~ must be measured between 0 and +5 % of rated voltage for the lowest point and the inflection point under no-load conditions, and the tolerances shall be measured between −5 % and 0 of rated voltage for the highest point under no-load conditions.

The duration of each voltage drop is determined according to the requirements of the applicable ~~LVRT~~ UVRT curve. The tolerance range for both drop duration and rise time prefers 40 ms.

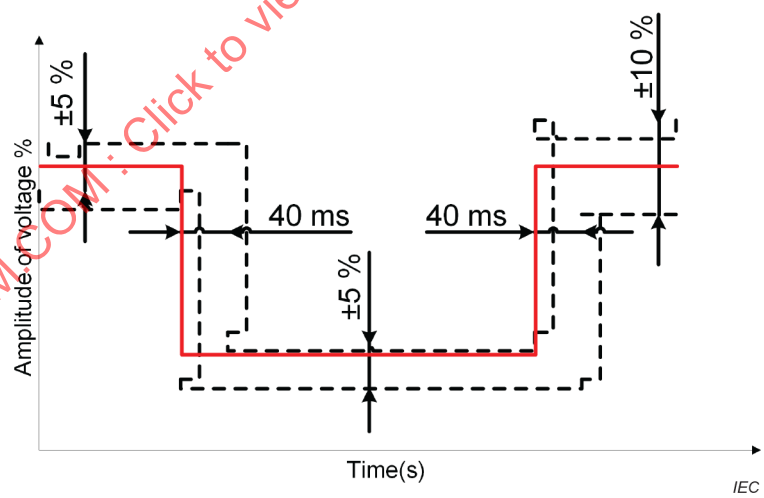

Figure 5 – Tolerance of voltage drop

5.3.4 Load test

Tests under load shall be carried out after the no-load test results successfully meet the performance requirements. The parameters of the grid fault simulator should be consistent with the no-load test.

IECNORM.COM : Click to view the full PDF of IEC TS 62910:2020 RLV

With the EUT connected to the grid fault simulator device and the PV simulator (or PV array), the output power should be set to (0,1 ~ 0,3)P_n and above 0,9P_n separately. Additional load tests at other power levels should be performed as determined by the specific country or regional requirements.

During the ~~LVRT~~ UVRT test, MP1, MP2, and MP3 (shown in Figure 1) shall be selected as the test points for measuring and recording the values of voltage and current.

The waveform and data of the measured voltage and current at the measuring points shall be recorded by the data acquisition device from time A prior to the voltage drop to time B after the subsequent voltage rise.

For A and B, specific data should be determined by different countries or regions.

6 Assessment criteria

The various assessment criteria are determined by the requirements of the different countries or regions. The characteristics and performance criteria for utilization are shown in Annex B, and can be referenced by a local user.

IECNORM.COM : Click to view the full PDF of IEC TS 62910:2020 RLV

Annex A
(informative)

Circuit faults and voltage drops

A.1 Fault types

The grid faults of high voltage power transmission line are commonly divided into four different types: single-phase grounded fault, two-phase short circuit fault, two-phase grounded fault, and three-phase short circuit fault. The most common one is the single-phase grounded fault, which accounting for over 90 % of the total number of the faults.

Considering the different fault phases, the short circuit paths for all types of fault are shown in Table A.1.

Table A.1 – Short-circuit paths for different fault types

Type No.	Short circuit type	Equivalent diagram	Mathematical formulae
1	Single-phase(A) short circuit grounded fault	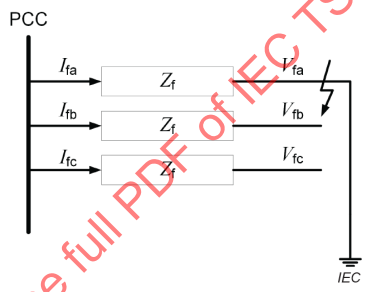	$V_{fa} = 0$ $I_{fa} \neq 0$ $I_{fb} = I_{fc} = 0$
2	Single-phase(B) short circuit grounded fault	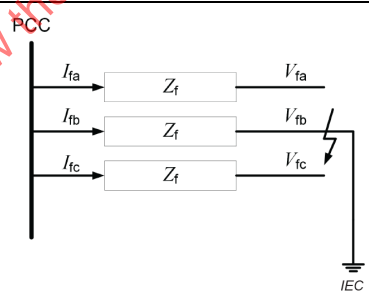	$V_{fb} = 0$ $I_{fb} \neq 0$ $I_{fa} = I_{fc} = 0$
3	Single-phase(C) short circuit grounded fault	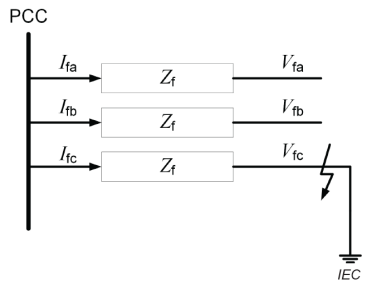	$V_{fc} = 0$ $I_{fc} \neq 0$ $I_{fa} = I_{fb} = 0$
4	Two-phase(AB) short circuit isolated fault	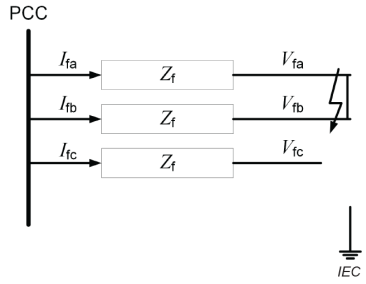	$V_{fa} = V_{fb} \neq 0$ $I_{fc} = 0$ $I_{fa} + I_{fb} = 0$

IECNORM.COM : Click to view the full PDF of IEC TS 62910:2020 RLV

Type No.	Short circuit type	Equivalent diagram	Mathematical formulae
5	Two-phase(BC) short circuit isolated fault	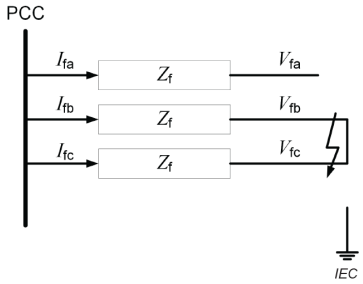	$V_{fb} = V_{fc} \neq 0$ $I_{fa} = 0$ $I_{fb} + I_{fc} = 0$
6	Two-phase(CA) short circuit isolated fault	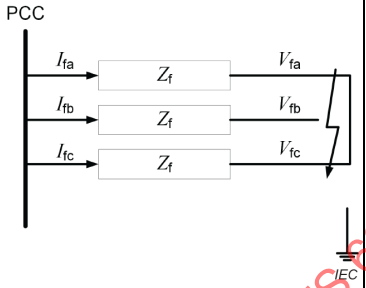	$V_{fa} = V_{fc} \neq 0$ $I_{fb} = 0$ $I_{fa} + I_{fc} = 0$
7	Two-phase(AB) short circuit grounded fault	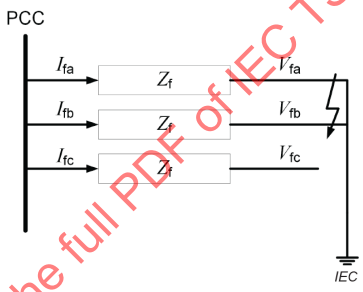	$V_{fa} = V_{fb} = 0$ $I_{fc} = 0$ $I_{fa} + I_{fb} \neq 0$
8	Two-phase(BC) short circuit grounded fault	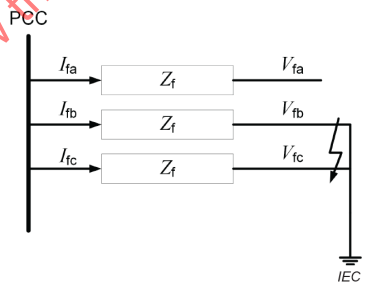	$V_{fb} = V_{fc} = 0$ $I_{fa} = 0$ $I_{fb} + I_{fc} \neq 0$
9	Two-phase(CA) short circuit grounded fault	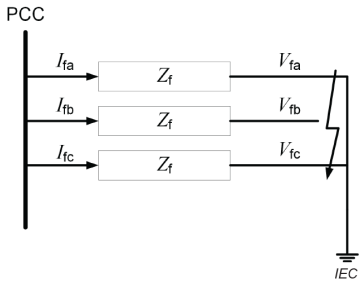	$V_{fa} = V_{fc} = 0$ $I_{fb} = 0$ $I_{fa} + I_{fc} \neq 0$

IECNORM.COM : Click to view the full PDF of IEC TS 62910:2020 RLV

Type No.	Short circuit type	Equivalent diagram	Mathematical formulae
10	Three-phase short-circuit fault	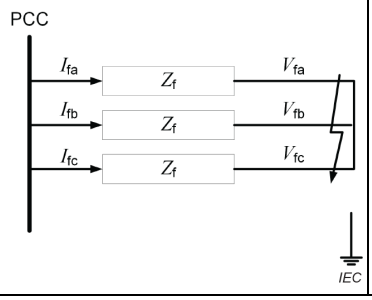	$V_{fa} = V_{fb} = V_{fc} = 0$ $I_{fa} + I_{fc} + I_{fc} = 0$

NOTE 1 V_{fa}, V_{fb} and V_{fc} mean fault voltage of phase A, phase B and phase C at fault point separately.

NOTE 2 I_{fa}, I_{fb} and I_{fc} mean fault current of phase A, phase B and phase C at fault point separately.

NOTE 3 Type No. 1,2,3,7,8 and 9 are not applicable for IT system. The IT power system has all live parts isolated from earth or one point connected to earth through an impedance, the exposed conductive parts of the electrical installation being earthed independently or collectively or to the earthing of the system.

A.2 Voltage drops

A.2.1 General

When a fault occurs, the voltage amplitude in the faulted phase should be decreased. When a fault occurs between two phases, the phase angle should be changed on inverter output side. Due to the different types of line-transformer connections, the magnitude and phase of inverter AC voltage will vary. Figure A.1 shows the circuit topology under the fault condition.

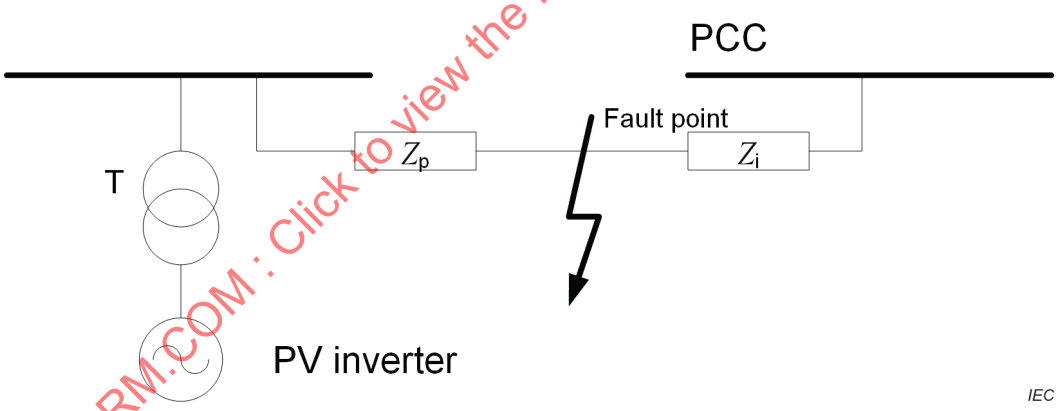

Figure A.1 – Grid fault diagram

As indicated in Table A.1, the value of fault phase voltage at the fault point is zero. (If the grid fault type is two-phase short circuit fault without ground, the line voltage between two fault phases should be zero.) Because PCC is the common connection point of the infinite grid, Z_i, between the fault point and PCC could be treated as infinite. The voltage drop amplitude and phase deviation in PV inverter AC side have been determined by the value of Z_p and type of transformer.

The transformer T represents the voltage and phase transformation being equivalent to all the transformers between the fault point and the PV inverter, because one or more transformers are connected. The equivalent transformer T has only two types: Y/Y or Y/Δ. In order to simplify the analysis, the transformer windings could be considered as one of two types, Yn/Yn12 and Δ/Yn11, with a ratio of 1.

NOTE 1 In this test specification, the example circuit is a three-phase system with floating neutral point and no electrical loads.

IECNORM.COM : Click to view the full PDF of IEC TS 62910:2020 RLV

NOTE 2 For other system types, the short circuit schematic diagram may be different from the example.

A.2.2 Three-phase short-circuit fault

Figure A.2 illustrates the change in inverter AC voltage magnitude and phase when a three-phase short-circuit fault occurs:

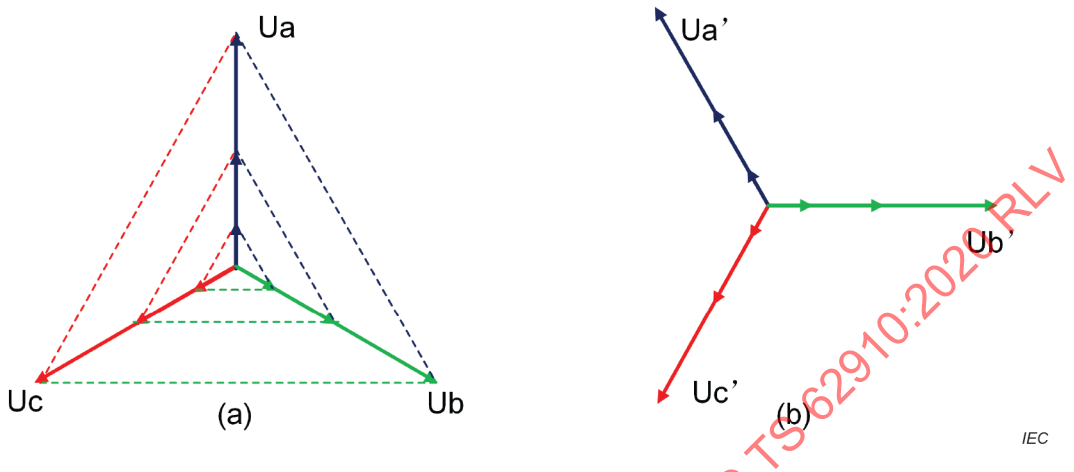

Figure A.2 – Diagram of voltage vector for three-phase short-circuit fault

Figure A.2a) shows the angle and phase state with a Yn/Yn12 transformer connection. Figure A.2b) shows the angle and phase state with a Δ/Yn11 transformer connection. The corresponding relationship between the fault phase and the other two phases is shown in the following Table A.2.

Table A.2 – Amplitude and phase changes in three-phase short-circuit fault

Residual voltage of fault phase %	With the Yn/Yn12 transformer						With the Δ/Yn11 transformer					
	Phase A		Phase B		Phase C		Phase A		Phase B		Phase C	
	Am.	Ph.	Am.	Ph.	Am.	Ph.	Am.	Ph.	Am.	Ph.	Am.	Ph.
100	1	0	1	0	1	0	1	30	1	30	1	30
50	0,5	0	0,5	0	0,5	0	0,5	30	0,5	30	0,5	30
20	0,2	0	0,2	0	0,2	0	0,2	30	0,2	30	0,2	30
0	0	-	0	-	0	-	0	-	0	-	0	-
NOTE Am. means amplitude and Ph. means the initial phase.												

A.2.3 Two-phase short-circuit fault with ground

There are three possible two-phase short-circuit earth faults, depending on the fault phases. Taking the two-phase (BC) short circuit fault with ground for example, the change in inverter AC voltage amplitudes and phases are shown below:

IECNORM.COM : Click to view the full PDF of IEC TS 62910:2020 RLV

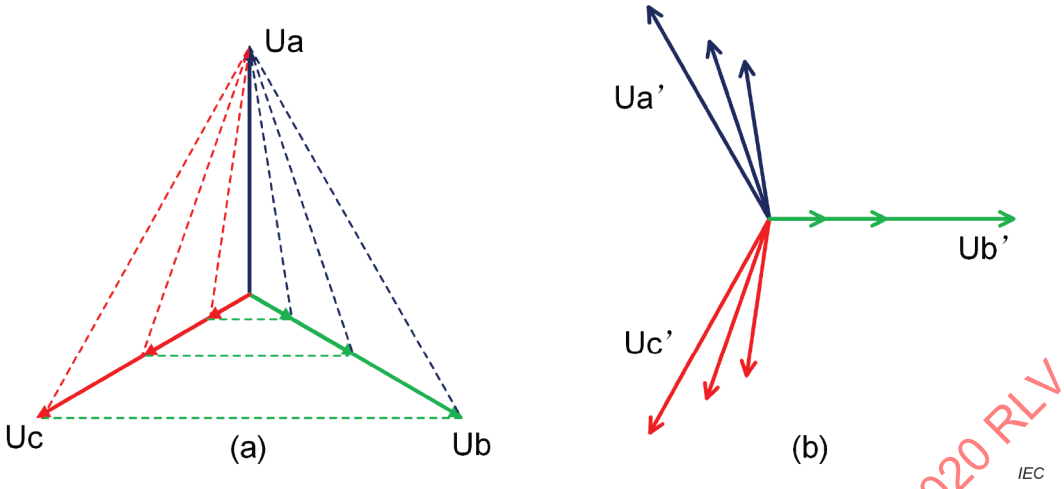

Figure A.3 – Diagram of voltage vector of two-phase (BC) short-circuit fault with ground

Figure A.3a) shows the angle and phase state with a Yn/Yn12 transformer connection. Figure A.3b) shows the angle and phase state with a Δ/Yn11 transformer connection. The corresponding relationship between the faulted phases and the other phases is shown in the following Table A.3.

Table A.3 – Amplitude and phase changes in two-phase (BC) ~~short-circuit fault with ground~~

Residual voltage of fault phase	With the Yn/Yn12 transformer						With the Δ/Yn11 transformer					
	Phase A		Phase B		Phase C		Phase A		Phase B		Phase C	
%	Am.	Ph.	Am.	Ph.	Am.	Ph.	Am.	Ph.	Am.	Ph.	Am.	Ph.
100	1	0	1	0	1	0	1	30	1	30	1	30
50	1	0	0,5	0	0,5	0	0,76	19	0,5	30	0,76	41
20	1	0	0,2	0	0,2	0	0,64	9	0,2	30	0,64	51
0	1	0	0	-	0	-	0,58	0	0	-	0,58	60
NOTE Am. means amplitude and Ph. means the initial phase.												

A.2.4 Two-phase short-circuit fault without ground

There are three possible two-phase short-circuit faults (without ground), depending on the faulted phases. Taking the two-phase (BC) short circuit fault for example, the change in inverter AC voltage amplitudes and phases are shown below:

IECNORM.COM : Click to view the full PDF of IEC TS 62910:2020 RLV

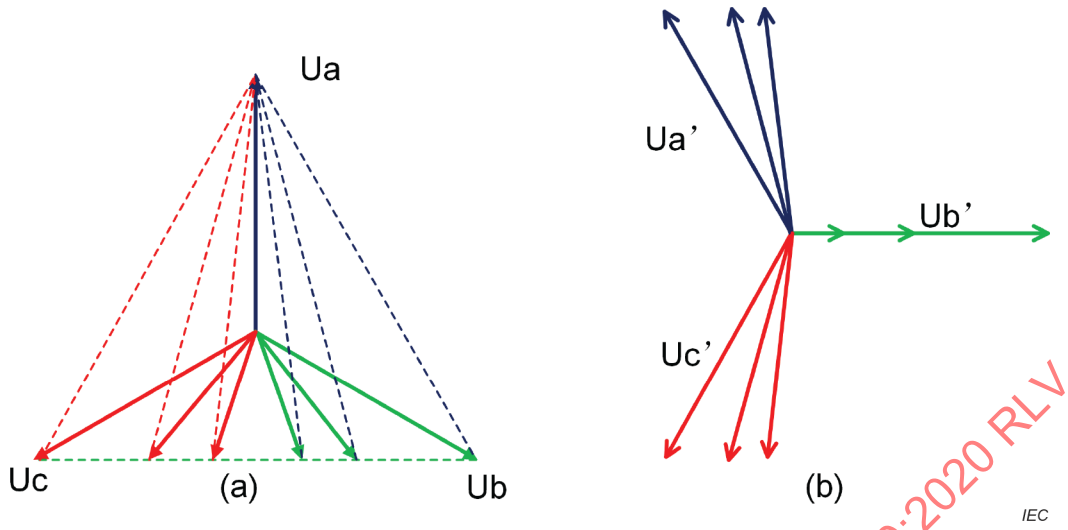

Figure A.4 – Diagram of voltage vector of two-phase (BC) short-circuit fault

Figure A.4a) shows the angle and phase state with a Yn/Yn12 transformer connection. Figure A.4b) shows the angle and phase state with a Δ/Yn11 transformer connection. The corresponding relationship between the faulted phases and the other phases is shown in the following Table A.4.

Table A.4 – Amplitude and phase changes in two-phase (BC) short-circuit fault

Residual voltage of fault phase	With the Yn/Yn12 transformer						With the Δ/Yn11 transformer					
	Phase A		Phase B		Phase C		Phase A		Phase B		Phase C	
%	Am.	Ph.	Am.	Ph.	Am.	Ph.	Am.	Ph.	Am.	Ph.	Am.	Ph.
100	1	0	1	0	1	0	1	30	1	30	1	30
50	1	0	0,66	19	0,66	-19	0,9	16	0,5	30	0,9	44
20	1	0	0,53	41	0,53	-41	0,87	7	0,2	30	0,87	53
0	1	0	0,5	60	0,5	-60	0,866	0	0	-	0,866	60
NOTE Am. means amplitude and Ph. means the initial phase.												

A.2.5 Single-phase short-circuit fault with ground

There are three possible single-phase short-circuit faults to ground, depending on the faulted phase. Taking the single-phase (A) short circuit fault for example, the change in inverter AC voltage amplitudes and phases are shown below:

IECNORM.COM : Click to view the full PDF of IEC TS 62910:2020 RLV

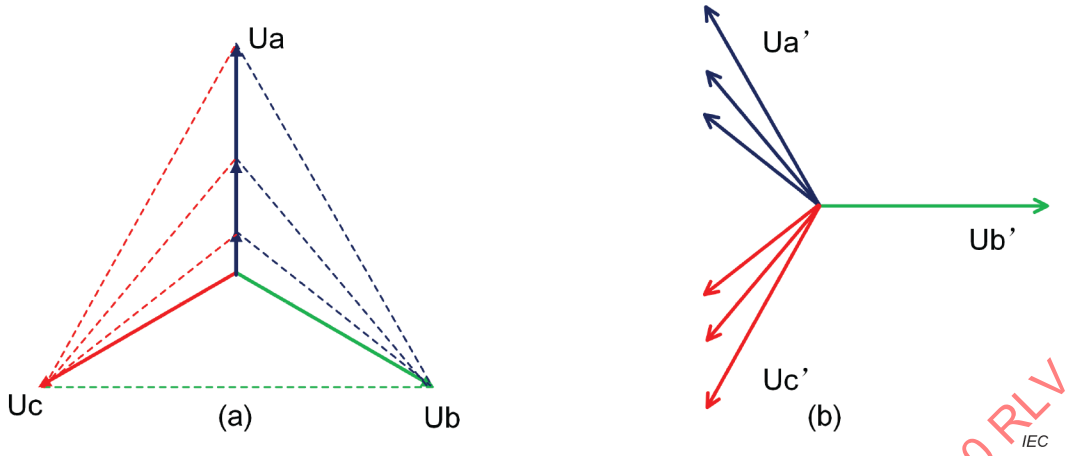

Figure A.5 – Diagram of voltage vector of single-phase (A) short-circuit fault with ground

Figure A.5a) shows the angle and phase state with a Yn/Yn12 transformer connection. Figure A.5b) shows the angle and phase state with a Δ/Yn11 transformer connection. The corresponding relationship between the faulted phase and the other phases is shown in the following Table A.5.

Table A.5 – Amplitude and phase changes in single-phase (A) ~~short-circuit fault with ground~~

Residual voltage of fault phase	With the Yn/Yn12 transformer						With the Δ/Yn11 transformer					
	Phase A		Phase B		Phase C		Phase A		Phase B		Phase C	
%	Am.	Ph.	Am.	Ph.	Am.	Ph.	Am.	Ph.	Am.	Ph.	Am.	Ph.
100	1	0	1	0	1	0	1	30	1	30	1	30
50	0,5	0	1	0	1	0	0,76	41	~~0,5~~ 1	30	0,76	19
20	0,2	0	1	0	1	0	0,64	51	~~0,2~~ 1	30	0,64	9
0	1	0	1	0	1	0	0,58	60	~~0~~ 1	~~–~~ 30	0,58	0
NOTE Am. means amplitude and Ph. means the initial phase.												

IECNORM.COM : Click to view the full PDF of IEC TS 62910:2020 RLV

Annex B
(informative)

Determination of critical performance values in ~~LVRT~~ UVRT testing

B.1 General

This Annex provides suggested methods for determining several of the critical performance values in ~~LVRT~~ UVRT testing. Different countries and regions may choose alternate methods according to the requirements of their standards.

B.2 Drop depth ratio

As the voltage of the test circuit may deviate from the nominal voltage of system, the rated voltage of the EUT should be used as the reference voltage for calculations of the voltage drop depth ratio, as shown in Formula B.1. As such it is not recommended to use the value of the actual voltage measured prior to the drop test to calculate drop depth.

$$A_{\mathrm{n}} = \frac{U_{\mathrm{dip}}}{U_{\mathrm{n}}} \tag{B.1}$$

where

A_{n} is the residual voltage ratio;

U_{dip} is the actual voltage during the drop test;

U_{n} is the rated AC voltage of EUT.

B.3 Ride-through time

Over the voltage drop period, the EUT shall meet the ride-through time requirements corresponding with the applicable voltage drop depths. These requirements will differ depending on countries and regions, however, the ~~LVRT~~ UVRT performance should meet or exceed the most demanding requirements for the specified region.

~~LVRT~~ UVRT functions tested successfully according to specific ride through requirements should only be applied in corresponding countries and regions where those requirements are applicable.

B.4 Reactive current

If the EUT generates reactive current as a function of voltage drop depth over the duration of the voltage drop, the incremental voltage changes in the un-fault phases caused by the increased reactive current shall not exceed any values specified by the most demanding requirements of the different countries or regions.

If it is required that the reactive output current of the EUT should change dynamically according to the voltage change during the drop period, the time period for estimating the value of reactive current should be selected between the beginning of the voltage drop and the beginning of the voltage recovery. This is shown as the time between t_1 and t_2. in Figure B.1, In general, time period between t_2 and t_3 is not over 20 ms.

IECNORM.COM : Click to view the full PDF of IEC TS 62910:2020 RLV

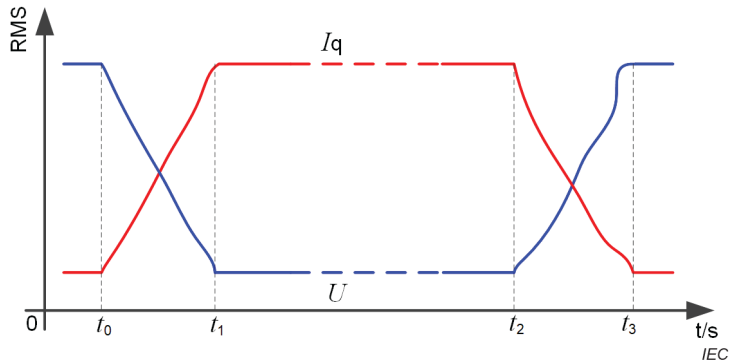

Figure B.1 – Determination of reactive current output

The output of reactive current may fluctuate during test. This fluctuation may result in reactive current values that are higher or lower than the standard requirement during the test, especially during the voltage drop period. Therefore, the reactive current value measurement should be averaged over the whole drop period.

B.5 Active power

If active power control characteristics are required by the local standard during ~~LVRT~~ UVRT events, it is necessary to characterize active powers (p_0) before, during (p_1), and after (p_2) the voltage drop, as shown in Figure B.2.

Active power (p_1) may fluctuate during the voltage drop interval, especially at point (p_s) where system voltage recovery begins. It is therefore misleading to use the value of active power recorded at p_s for active power control assessment. It is suggested instead that an average value of active power be determined over the time between t_1 and t_2 to assess the characteristics of active power recovery.

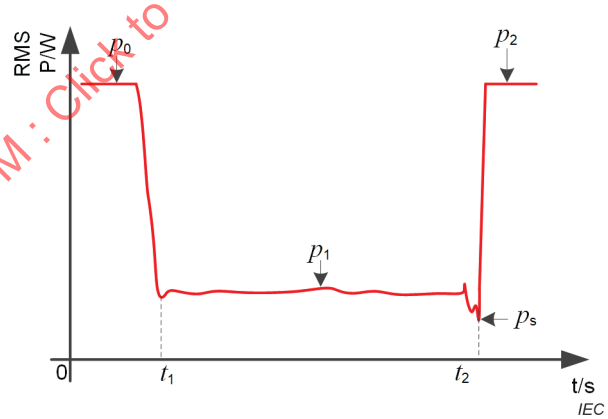

Figure B.2 – Determination of active power recovery

IECNORM.COM : Click to view the full PDF of IEC TS 62910:2020 RLV

Annex C
(informative)

Requirements of the UVRT curve

C.1 General

This Annex provides the recommendations of the requirements of the UVRT curve which are used in the countries and regions that do not have their own requirements. The countries and regions without UVRT requirements could follow the reference requirement to evaluate the performance of UVRT functions for PV inverter used in utility-interconnected PV systems.

C.2 UVRT curve

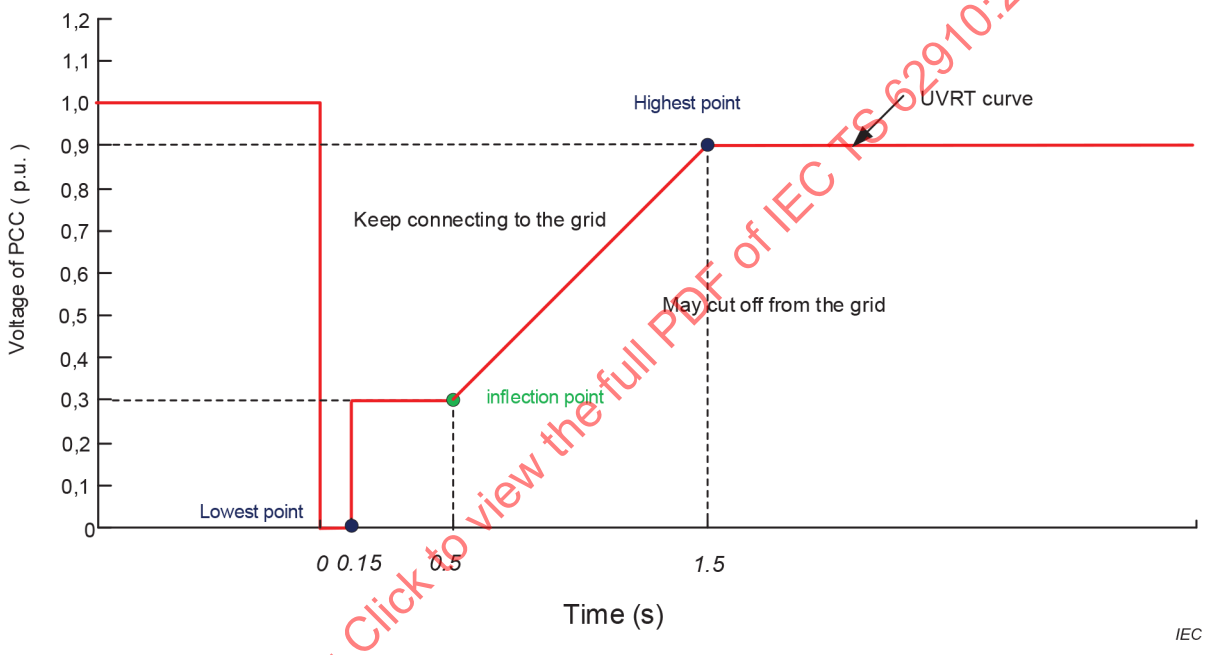

Figure C.1 – The typical curve of UVRT

The typical curve shows that the PV inverter should keep operating during operating conditions indicated in the area above the UVRT curve as shown in Figure C.1. Specifically, the PV inverter should keep operating for 150 ms without disconnecting from the grid when the interconnection voltage drops to 0 % of rated voltage; for 500 ms when the voltage drops to 30 % of rated voltage; and for 500 ms~1 500 ms when the voltage drops to 30 %~90 % of rated voltage.

Voltage drops above 90 % shall not lead to the cut off from of the PV inverter from the network.

C.3 Test points

The selected voltage drop points shall include the 0 % drop point, the 30 % drop point, and the 90 % drop point. Any drop points between the 30 % to 90 % drop may be selected for random points.

IECNORM.COM : Click to view the full PDF of IEC TS 62910:2020 RLV

Bibliography

IEC 60050-161:1990, *International Electrotechnical Vocabulary (IEV) – Part 161: Electromagnetic compatibility*

~~IEC 60364-1:2005, *Electrical installation of buildings – Part 1: Fundamental principles, assessment of general characteristics, definitions*~~

~~EN 50530:2010, *Overall efficiency of grid connected photovoltaic inverters*~~

IECNORM.COM : Click to view the full PDF of IEC TS 62910:2020 RLV

IECNORM.COM : Click to view the full PDF of IEC TS 62910:2020 RLV

IEC TS 62910

Edition 2.0 2020-07

TECHNICAL SPECIFICATION

colour inside

Utility-interconnected photovoltaic inverters – Test procedure for under voltage ride-through measurements

IECNORM.COM : Click to view the full PDF of IEC TS 62910:2020 RLV

IEC TS 62910:2020-07(en)

CONTENTS

FOREWORD 4
1 Scope 7
2 Normative references 7
3 Terms, definitions, symbols and abbreviated terms 7
3.1 Terms, definitions and symbols 7
3.2 Abbreviated terms 9
4 Test circuit and equipment 10
4.1 General 10
4.2 Test circuit 10
4.3 Test equipment 10
4.3.1 Measuring instruments 10
4.3.2 DC source 11
4.3.3 Short-circuit emulator 11
4.3.4 Converter based grid simulator 14
5 Test 14
5.1 Test protocol 14
5.2 Test curve 16
5.3 Test procedure 17
5.3.1 Pre-test 17
5.3.2 No-load test 17
5.3.3 Tolerance 17
5.3.4 Load test 17
6 Assessment criteria 18
Annex A (informative) Circuit faults and voltage drops 19
A.1 Fault types 19
A.2 Voltage drops 21
A.2.1 General 21
A.2.2 Three-phase short-circuit fault 22
A.2.3 Two-phase short-circuit fault with ground 22
A.2.4 Two-phase short-circuit fault without ground 23
A.2.5 Single-phase short-circuit fault with ground 24
Annex B (informative) Determination of critical performance values in UVRT testing 26
B.1 General 26
B.2 Drop depth ratio 26
B.3 Ride-through time 26
B.4 Reactive current 26
B.5 Active power 27
Annex C (informative) Requirements of the UVRT curve 28
C.1 General 28
C.2 UVRT curve 28
C.3 Test points 28
Bibliography 29

Figure 1 – Testing circuit diagram 10
Figure 2 – Short-circuit emulator 12

IECNORM.COM : Click to view the full PDF of IEC TS 62910:2020 RLV

Figure 3 – Converter device example 14
Figure 4 – UVRT curve example 16
Figure 5 – Tolerance of voltage drop 17
Figure A.1 – Grid fault diagram 21
Figure A.2 – Diagram of voltage vector for three-phase short-circuit fault 22
Figure A.3 – Diagram of voltage vector of two-phase (BC) short-circuit fault with ground 23
Figure A.4 – Diagram of voltage vector of two-phase (BC) short-circuit fault 24
Figure A.5 – Diagram of voltage vector of single-phase (A) short-circuit fault with ground 25
Figure B.1 – Determination of reactive current output 27
Figure B.2 – Determination of active power recovery 27
Figure C.1 – The typical curve of UVRT 28

Table 1 – Accuracy of measurements 11
Table 2 – Fault type and switch status 13
Table 3 – Test specification for UVRT (Indicative) 15
Table A.1 – Short-circuit paths for different fault types 19
Table A.2 – Amplitude and phase changes in three-phase short-circuit fault 22
Table A.3 – Amplitude and phase changes in two-phase (BC) 23
Table A.4 – Amplitude and phase changes in two-phase (BC) short-circuit fault 24
Table A.5 – Amplitude and phase changes in single-phase (A) 25

IECNORM.COM : Click to view the full PDF of IEC TS 62910:2020 RLV

INTERNATIONAL ELECTROTECHNICAL COMMISSION

UTILITY-INTERCONNECTED PHOTOVOLTAIC INVERTERS – TEST PROCEDURE FOR UNDER VOLTAGE RIDE-THROUGH MEASUREMENTS

FOREWORD

1) The International Electrotechnical Commission (IEC) is a worldwide organization for standardization comprising all national electrotechnical committees (IEC National Committees). The object of IEC is to promote international co-operation on all questions concerning standardization in the electrical and electronic fields. To this end and in addition to other activities, IEC publishes International Standards, Technical Specifications, Technical Reports, Publicly Available Specifications (PAS) and Guides (hereafter referred to as "IEC Publication(s)"). Their preparation is entrusted to technical committees; any IEC National Committee interested in the subject dealt with may participate in this preparatory work. International, governmental and non-governmental organizations liaising with the IEC also participate in this preparation. IEC collaborates closely with the International Organization for Standardization (ISO) in accordance with conditions determined by agreement between the two organizations.

2) The formal decisions or agreements of IEC on technical matters express, as nearly as possible, an international consensus of opinion on the relevant subjects since each technical committee has representation from all interested IEC National Committees.

3) IEC Publications have the form of recommendations for international use and are accepted by IEC National Committees in that sense. While all reasonable efforts are made to ensure that the technical content of IEC Publications is accurate, IEC cannot be held responsible for the way in which they are used or for any misinterpretation by any end user.

4) In order to promote international uniformity, IEC National Committees undertake to apply IEC Publications transparently to the maximum extent possible in their national and regional publications. Any divergence between any IEC Publication and the corresponding national or regional publication shall be clearly indicated in the latter.

5) IEC itself does not provide any attestation of conformity. Independent certification bodies provide conformity assessment services and, in some areas, access to IEC marks of conformity. IEC is not responsible for any services carried out by independent certification bodies.

6) All users should ensure that they have the latest edition of this publication.

7) No liability shall attach to IEC or its directors, employees, servants or agents including individual experts and members of its technical committees and IEC National Committees for any personal injury, property damage or other damage of any nature whatsoever, whether direct or indirect, or for costs (including legal fees) and expenses arising out of the publication, use of, or reliance upon, this IEC Publication or any other IEC Publications.

8) Attention is drawn to the Normative references cited in this publication. Use of the referenced publications is indispensable for the correct application of this publication.

9) Attention is drawn to the possibility that some of the elements of this IEC Publication may be the subject of patent rights. IEC shall not be held responsible for identifying any or all such patent rights.

The main task of IEC technical committees is to prepare International Standards. In exceptional circumstances, a technical committee may propose the publication of a Technical Specification when

- the required support cannot be obtained for the publication of an International Standard, despite repeated efforts, or
- the subject is still under technical development or where, for any other reason, there is the future but no immediate possibility of an agreement on an International Standard.

Technical Specifications are subject to review within three years of publication to decide whether they can be transformed into International Standards.

IEC TS 62910, which is a technical specification, has been prepared by IEC technical committee 82: Solar photovoltaic energy systems.

IECNORM.COM : Click to view the full PDF of IEC TS 62910:2020 RLV

This second edition cancels and replaces the first edition issued in 2015, and constitutes a technical revision.

It remains a TS because it is limited to providing recommended practices for UVRT testing in the context of non-uniform grid-codes lacking international consensus, and the rapid development of test technology in recent years.

The main technical changes with regard to the previous edition are as follows:

Clause	Previous edition	Present edition
3.1.12	the voltage support of EUT in accordance with the voltage drops. The K-factor is to be specified by the EUT manufacturer	the K-factor is to be supplied by the EUT manufacturer meeting additional requirements imposed by national standards and/or local codes
Figure 2	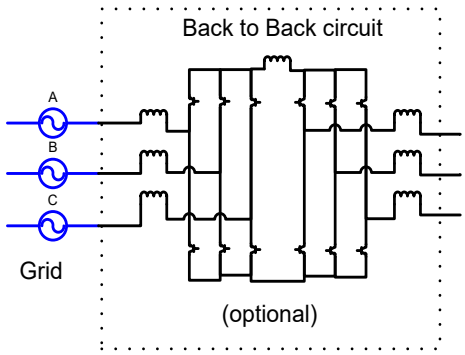	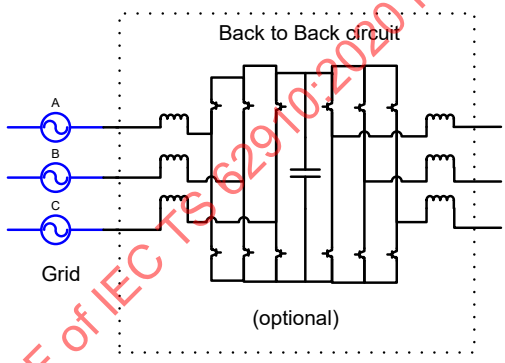
4.3.4	The test circuit essentially comprises a voltage source with a low internal resistance combined with broadband amplifiers.....	The test circuit essentially comprises a voltage source with a low internal resistance combined optionally with broadband amplifiers.....
Table 3	d The test should be carried out under specified K-factor provided by local manufacture.	d The test should be carried out under specified K-factor provided by manufacture meeting additional requirements imposed by national standards and/or local codes.
Figure 4	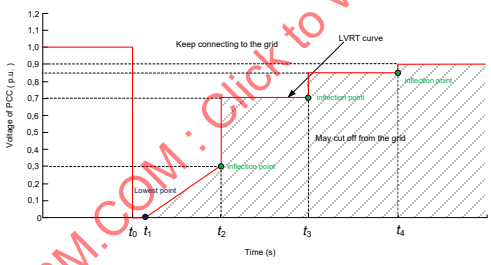	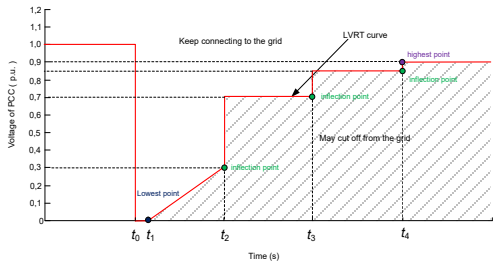
5.2	NOTE The example shows two types of points on the UVRT curve: the lowest point and the inflection point. Tests must be carried out at both types of points	The example shows three types of points on the UVRT curve: the highest point, the lowest point and the inflection point. Tests shall be carried out at above types of points.
5.3.1	Prior to the fault simulation tests, the EUT should run in normal operating mode. The selected UVRT curve should be used to identify voltage drop points, including the lowest point and the inflection point, ...	Prior to the fault simulation tests, the EUT should run in normal operating mode. The selected UVRT curve should be used to identify voltage drop points, including the highest point, the lowest point and the inflection point, ...

IECNORM.COM : Click to view the full PDF of IEC TS 62910:2020 RLV

The text of this Technical Specificationis based on the following documents:

Draft TS	Report on voting
82/1607/DTS	82/1640A/RVDTS

Full information on the voting for the approval of this Technical Specification can be found in the report on voting indicated in the above table.

This document has been drafted in accordance with the ISO/IEC Directives, Part 2.

The committee has decided that the contents of this document will remain unchanged until the stability date indicated on the IEC website under "http://webstore.iec.ch" in the data related to the specific document. At this date, the document will be

- reconfirmed,
- withdrawn,
- replaced by a revised edition, or
- amended.

IMPORTANT – The 'colour inside' logo on the cover page of this publication indicates that it contains colours which are considered to be useful for the correct understanding of its contents. Users should therefore print this document using a colour printer.

IECNORM.COM : Click to view the full PDF of IEC TS 62910:2020 RLV

UTILITY-INTERCONNECTED PHOTOVOLTAIC INVERTERS – TEST PROCEDURE FOR UNDER VOLTAGE RIDE-THROUGH MEASUREMENTS

1 Scope

This document provides a test procedure for evaluating the performance of Under Voltage Ride-Through (UVRT) functions in inverters used in utility-interconnected Photovoltaic (PV) systems.

This document is most applicable to large systems where PV inverters are connected to utility high voltage (HV) distribution systems. However, the applicable procedures may also be used for low voltage (LV) installations in locations where evolving UVRT requirements include such installations, e.g. single-phase or 3-phase systems.

The assessed UVRT performance is valid only for the specific configuration and operational mode of the inverter under test. Separate assessment is required for the inverter in other factory or user-settable configurations, as these may cause the inverter UVRT response to behave differently.

The measurement procedures are designed to be as non-site-specific as possible, so that UVRT characteristics measured at one test site, for example, can also be considered valid at other sites.

This document is for testing of PV inverters, though it contains information that may also be useful for testing of a complete PV power plant consisting of multiple inverters connected at a single point to the utility grid. It further provides a basis for utility-interconnected PV inverter numerical simulation and model validation.

2 Normative references

The following documents are referred to in the text in such a way that some or all of their content constitutes requirements of this document. For dated references, only the edition cited applies. For undated references, the latest edition of the referenced document (including any amendments) applies.

IEC TS 61836, *Solar photovoltaic energy systems – Terms, definitions and symbols*

3 Terms, definitions, symbols and abbreviated terms

3.1 Terms, definitions and symbols

For the purposes of this document, the terms and definitions in IEC TS 61836 and the following apply.

ISO and IEC maintain terminological databases for use in standardization at the following addresses:

- IEC Electropedia: available at http://www.electropedia.org/
- ISO Online browsing platform: available at http://www.iso.org/obp

IECNORM.COM : Click to view the full PDF of IEC TS 62910:2020 RLV

3.1.1
drop depth
magnitude of voltage drop during a fault or simulated fault, as a percentage of the nominal supply voltage

3.1.2
double drop
sudden decline of the nominal voltage to a value below 90 % of the voltage of point of common coupling (PCC), followed after a short time by a voltage recovery, which happens twice

Note 1 to entry: Voltage changes which do not reduce the voltage to below 90 % of the voltage of PCC are not considered to be voltage drops.

3.1.3
equipment under test
EUT
equipment on which these tests are performed and refers to the utility-interconnected PV inverter. During test period, EUT is connected with PV simulator instead of real PV modules on the direct current (DC) side, while alternating current (AC) side is connected with grid

3.1.4
I_q
output reactive current of EUT

3.1.5
under voltage ride through
UVRT
capability of an inverter to continue generating power to connected loads during a limited duration loss or drop of grid voltage

3.1.6
maximum power point tracking
MPPT
control strategy of operation at maximum power point or nearby

3.1.7
N_{EUT}
access point of the EUT during the test

3.1.8
P_N
rated power of EUT

3.1.9
point of common coupling
PCC
point of a power supply network, electrically nearest to a particular load, at which other loads are, or may be, connected

Note 1 to entry: These loads can be either devices, equipment or system, or distinct customer's installations.

Note 2 to entry: In some applications, the term "point of common coupling" is restricted to public networks.

[SOURCE: IEC 60050-161:1990, 161-07-15]

IECNORM.COM : Click to view the full PDF of IEC TS 62910:2020 RLV

3.1.10
proportionality constant K
K-factor
the K-factor is to be supplied by the EUT manufacturer meeting additional requirements imposed by national standards and/or local codes

3.1.11
PV array simulator
simulator that has I-V characteristics equivalent to a PV array

3.1.12
S_{EUT}
apparent short-circuit power at N_{EUT}

$S_{EUT} = I_{sc} \times U_N$, I_{sc} refer to short-circuit current at N_{EUT} during the no-load test

3.1.13
single drop
sudden decline of the nominal voltage to a value below 90 % of the voltage of PCC, followed after a short time by a voltage recovery, which happens once

Note 1 to entry: Voltage changes which do not reduce the voltage to below 90 % of the voltage of PCC are not considered to be voltage drops.

3.1.14
Z_{grid}
grid short-circuit impedance value of the main point (MP) 1 (see Figure 1)

3.1.15
Z_i
impedance value between the fault point and PCC

3.1.16
Z_p
impedance value between the fault point and EUT

3.2 Abbreviated terms

AC	alternating current
A/D	analog to digital
DC	direct current
EUT	equipment under test
HV	high voltage
LV	low voltage
MV	middle voltage
PV	photovoltaic
RMS	root mean square
UVRT	under voltage ride through

IECNORM.COM : Click to view the full PDF of IEC TS 62910:2020 RLV

4 Test circuit and equipment

4.1 General

The circuits and equipment described in this clause are developed to allow tests that simulate the full range of anticipated grid faults, including:

- Single phase to ground fault (any phase).
- Two phase isolated fault, between any two phases.
- Two phase grounded fault, involving any two phases.
- Three phase short-circuit fault.

A full discussion of these faults and the resulting impact on voltage magnitude and phase angles is included in Annex A.

The short circuit emulator and grid simulator described in 4.3.3 and 4.3.4 are informative examples and are not intended to restrict design flexibility. Other designs may be used to achieve equivalent test functionality.

4.2 Test circuit

The UVRT test circuit includes a DC source, the EUT, a grid fault simulator and the grid. A PV simulator (or PV array) provides input energy for the EUT. The output of the EUT is connected to the grid via a grid fault simulator, as shown in Figure 1.

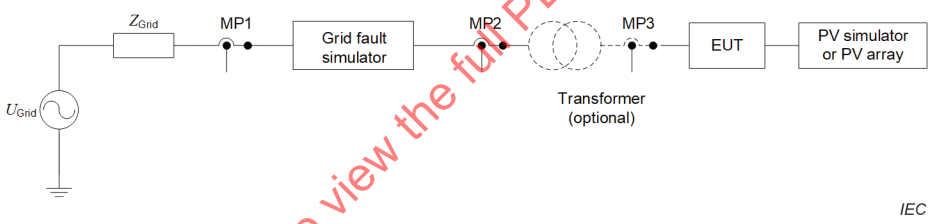

NOTE MP1 is the measurement point between the grid and the grid fault simulator; MP2 is the measurement point at the high voltage side of the transformer; MP3 is the measurement point at the low voltage side of the transformer.

Figure 1 – Testing circuit diagram

4.3 Test equipment

4.3.1 Measuring instruments

Waveforms shall be measured by a device with memory function, for example, a storage or digital oscilloscope, or a high speed data acquisition device. Accuracy of the oscilloscope or data acquisition system should be at least 0,2 % of full scale. The analogue to A/D of the measurement device shall have at least 12 bit resolution (in order to maintain the required measurement accuracy).

Voltage transformers and current transformers are the required sensors for measurement. The accuracy of the transducers should be 0,5 % of full scale or better. It is necessary to select the transducer measuring range depending on the normal value of the signal to be measured. The selected measuring range shall not exceed 150 % of the normal value of the measured signal. The transducer accuracy requirements are shown in Table 1.

IECNORM.COM : Click to view the full PDF of IEC TS 62910:2020 RLV

Table 1 – Accuracy of measurements

Measurement device	Accuracy	
Data acquisition device	0,2 %	full scale
Voltage transformer	0,5 %	full scale
Current transformer	0,5 %	full scale

4.3.2 DC source

A PV array, PV array simulator or controlled DC source with PV characteristics may be used as the DC power source to supply input energy for the UVRT test. As the EUT input source, the DC power source shall be capable of supplying the EUT maximum input power and other power levels during the test, at minimum and maximum input operating voltages of the EUT.

The PV simulator should emulate the current/voltage characteristic of the PV module or PV array for which the EUT is designed. The response time of a PV simulator should not be longer than the MPP tracking response time of EUT.

For a EUT under test without galvanic isolation between the DC side and AC side, the output of the PV simulator shall not be earthed.

The equivalent capacitance between the output of the PV simulator and earth should be as low as possible in order to minimize the impact on the EUT.

A PV array used as the EUT input source shall be capable of matching the EUT input power levels specified by the test conditions. It is necessary to select a period of time in which the solar irradiance is stable and does not vary more than 5 % during the test.

4.3.3 Short-circuit emulator

As part of the grid simulator device, the short-circuit emulator is used to create the voltage drops due to short-circuits between the two or three phases, or between one or two phases to ground, via the impedance network Z_1 and Z_2 as shown in the test device layout in Figure 2.

IECNORM.COM : Click to view the full PDF of IEC TS 62910:2020 RLV

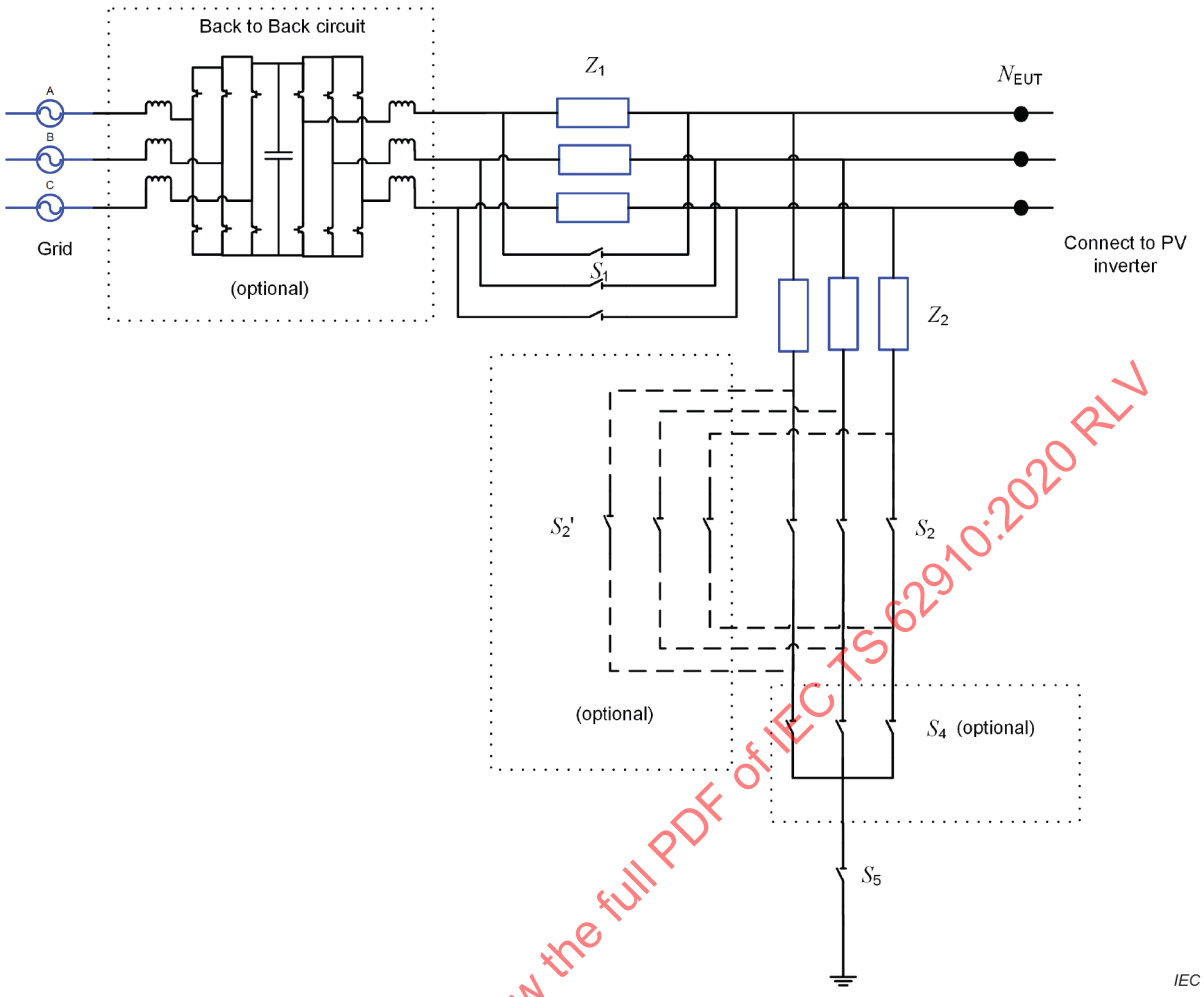

Figure 2 – Short-circuit emulator

The impedance Z_1 is used to limit the effect of the short circuit on the utility service that powers the test circuit. The sizing of Z_1 shall therefore account for all test sequences to be performed and limit the short-circuit current taken from the grid to values that do not cause an excessive reduction of the grid voltage. Considering an acceptable voltage reduction of at most 5 % when performing the test, the minimum value of Z_1 shall be at least 20 × Z_{Grid}, where Z_{Grid} is the grid short-circuit impedance measured at the test circuit connection point.

To ensure that the test is realistic, however, the apparent short-circuit power (S_{EUT}) available at the EUT connection node N_{EUT} should be at least equal to 3×Pn, where Pn is the rated power of the EUT (minimum value S_{EUT} > 3 × Pn, recommended 5 × Pn < S_{EUT} < 6 × Pn). This means during the short-circuit tests, the contribution of current through Z_1 and Z_2 from the grid remains dominant compared to the current contributed by the EUT. In this way, the inverter current does not create a significant voltage rise for the duration of the test relative to the no-load drop.

The two conditions described above define the minimum and maximum limits of Z_1. The two conditions combined also define the limit criteria for the choice of a grid infrastructure suitable for performing the test with the impedance circuit. If the grid infrastructure cannot meet above requirements, an alternative test circuit utilizing a back-to-back converter is allowed, as shown in Figure 2 may be added to reduce the grid short-circuit impedance Z_{Grid}.

IECNORM.COM : Click to view the full PDF of IEC TS 62910:2020 RLV

Generally, the X/R value of inductor Z_1 and Z_2 for the short-circuit emulator may close to the transmission line impedance values for different countries and regions. It is also appropriate that the inductive impedances Z_1 and Z_2 should be characterised by an X/R ratio equal to at least 3, in order to reproduce the typical minimum values of X/R found in HV as well as MV power lines.

NOTE 1 X: Equivalent impedance of inductor.

NOTE 2 R: Equivalent resistance of inductor.

A bypass connection (Switch S_1) of Z_1 is usually used to prevent overheating of the impedance Z_1 before and after the execution of each test sequence.

The voltage drop is created by connecting the impedance Z_2 by the switch S_2. If the voltage drop is required to be created twice in a short period (for double drop tests), a parallel switch S_2' is normally used. The value of $Z_2/(Z_1 + Z_2 + Z_{Grid})$ shall be adjusted to the required voltage magnitudes. For example, when the required voltage magnitude is 50 % of the rated voltage, the value of $Z_2/(Z_1 + Z_2 + Z_{Grid})$ should be about 0,5.

The switch S_2 shall be able to accurately control the time between connection and disconnection of Z_2 for single phase, two-phase or three-phase tests. If the phase of switch S_2 cannot be independently controlled, the serial switch B_1 may be used to choose the fault phase. B_2 is used to select whether the fault is to earth or not. All switches may be either mechanical circuit breakers or power electronic devices.

The status of switch B_1 and B_2 should be set before performing the test. The status of switches corresponding to fault types is shown in Table 2.

The test report shall specify the values of impedances Z_1 and Z_2, the related X/R ratio, and a description of the circuit used. In addition, the grid short-circuit power available at the voltage level at which the test is performed shall be documented.

The status of switches and fault types are shown in Table 2.

Table 2 – Fault type and switch status

Fault type	Switch status			
	Phase A of B_1	Phase B of B_1	Phase C of B_1	B_2
Phase A to ground	Closed	Open	Open	Closed
Phase B to ground	Open	Closed	Open	Closed
Phase C to ground	Open	Open	Closed	Closed
Phase A and B to ground	Closed	Closed	Open	Closed
Phase B and C to ground	Open	Closed	Closed	Closed
Phase C and A to ground	Closed	Open	Closed	Closed
Phase A and B	Closed	Closed	Open	Open
Phase B and C	Open	Closed	Closed	Open
Phase C and A	Closed	Open	Closed	Open
Phase A, B and C	Closed	Closed	Closed	---

NOTE 1 During the period of voltage drop, S_1 should be opened first. S_2 should be closed after S_1 is opened. The time interval between the above two actions shall be very short.

NOTE 2 During the period of voltage recovery, S_2 should be opened first. S_1 should be closed after S_2 is opened. The time interval between the above two actions shall be very short.

IECNORM.COM : Click to view the full PDF of IEC TS 62910:2020 RLV

4.3.4 Converter based grid simulator

The test circuit mentioned in 4.3.3 is recommended for simulation of grid faults. However, if the test conditions cannot be met, an alternative test circuit utilizing a back-to-back converter is allowed, as shown in Figure 3.

The test circuit essentially comprises a voltage source with a low internal resistance combined optionally with broadband amplifiers (linear or forced switching type) capable of faithfully reproducing three sinusoidal voltages with controlled harmonic content, and adjustable amplitude, fundamental frequency and phase relationship within broad margins.

When the converter is used, it shall meet the following requirements:

a) It shall be capable of independently controlling the three phases in terms of amplitude and phase angle.

b) It shall incorporate impedances Z_A, Z_B and Z_C, that can be adjusted in order to reproduce the ohmic and inductive components of short-circuit impedances that are typical of the grid.

c) It shall be capable of reproducing the phase voltages and relative phase angles that occur on the LV side of transformers in the event of each of the various fault types. (See Annex A for the vector representations for each fault).

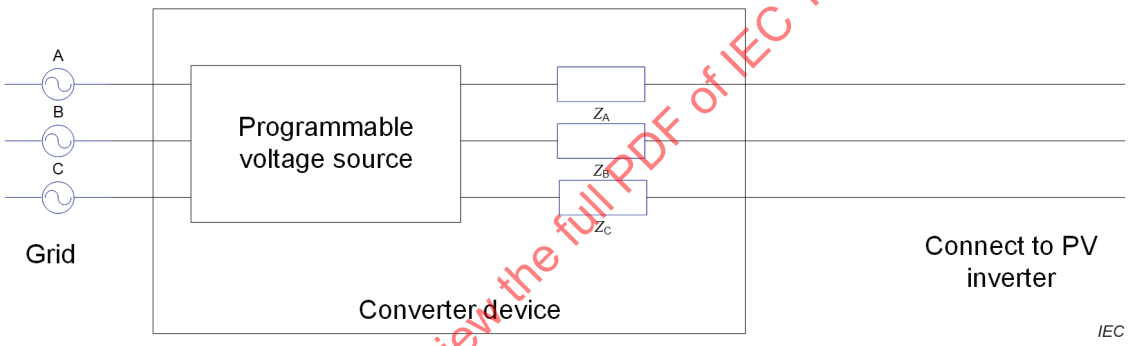

Figure 3 – Converter device example

If the programmable voltage source is a bi-directional, controlled output voltage type and is capable of replicating the influence of short-circuit impedances typical of the grid, the impedances Z_A, Z_B, Z_C may be omitted.

5 Test

5.1 Test protocol

The UVRT test protocol is designed to verify that the EUT responds appropriately to voltage drops (due to grid faults). During the test, the EUT shall demonstrate that it can:

- Appropriately detect the simulated fault.
- Ride through the event and continue operation as specified in the applicable curves.
- Not suffer any damage from the event.

The required levels of active power and reactive power output during the voltage drop period may differ depending on the country local codes. The response to the voltage drop specified in Table 3 shall be recorded over the EUT operating period with two output power ranges:

a) between 0,1 P_n and 0,3 P_n;

b) above 0,9 P_n;

and with two fault conditions:

IECNORM.COM : Click to view the full PDF of IEC TS 62910:2020 RLV

c) three-phase drop;

d) two-phase drop or single-phase drop.

The tests should be carried out at least twice at each test point listed in Table 3.

Table 3 – Test specification for UVRT (Indicative)

Drop times	Drop depth[b]	Drop phase[c]	EUT output conditions[d]
Single drop	A_1	three-phase	Full load (above 0,9 P_n)
			Part load (0,1 P_n and 0,3 P_n)
		two-phase	Full load (above 0,9 P_n)
			Part load (0,1 P_n and 0,3 P_n)
		Two-phase to ground	Full load (above 0,9 P_n)
			Part load (0,1 P_n and 0,3 P_n)
		Single-phase to ground	Full load (above 0,9 P_n)
			Part load (0,1 P_n and 0,3 P_n)
	...	three-phase	Full load (above 0,9 P_n)
			Part load (0,1 P_n and 0,3 P_n)
		two-phase	Full load (above 0,9 P_n)
			Part load (0,1 P_n and 0,3 P_n)
		Two-phase to ground	Full load (above 0,9 P_n)
			Part load (0,1 P_n and 0,3 P_n)
		Single-phase to ground	Full load (above 0,9 P_n)
			Part load (0,1 P_n and 0,3 P_n)
	A_n	three-phase	Full load (above 0,9 P_n)
			Part load (0,1 P_n and 0,3 P_n)
		two-phase	Full load (above 0,9 P_n)
			Part load (0,1 P_n and 0,3 P_n)
		Two-phase to ground	Full load (above 0,9 P_n)
			Part load (0,1 P_n and 0,3 P_n)
		Single-phase to ground	Full load (above 0,9 P_n)
			Part load (0,1 P_n and 0,3 P_n)
Double drop[a]	A_1	three-phase	Full load (above 0,9 P_n)
			Part load (0,1 P_n and 0,3 P_n)
		two-phase	Full load (above 0,9 P_n)
			Part load (0,1 P_n and 0,3 P_n)
		Two-phase to ground	Full load (above 0,9 P_n)
			Part load (0,1 P_n and 0,3 P_n)
		Single-phase to ground	Full load (above 0,9 P_n)
			Part load (0,1 P_n and 0,3 P_n)
	...	three-phase	Full load (above 0,9 P_n)
			Part load (0,1 P_n and 0,3 P_n)
		two-phase	Full load (above 0,9 P_n)
			Part load (0,1 P_n and 0,3 P_n)
		Two-phase to ground	Full load (above 0,9 P_n)
			Part load (0,1 P_n and 0,3 P_n)
		Single-phase to ground	Full load (above 0,9 P_n)
			Part load (0,1 P_n and 0,3 P_n)
	A_n	three-phase	Full load (above 0,9 P_n)
			Part load (0,1 P_n and 0,3 P_n)
		two-phase	Full load (above 0,9 P_n)
			Part load (0,1 P_n and 0,3 P_n)

IECNORM.COM : Click to view the full PDF of IEC TS 62910:2020 RLV

Drop times	Drop depth[b]	Drop phase[c]	EUT output conditions[d]
		Two-phase to ground	Full load (above 0,9 P_n)
			Part load (0,1 P_n and 0,3 P_n)
		Single-phase to ground	Full load (above 0,9 P_n)
			Part load (0,1 P_n and 0,3 P_n)

[a] Double drop test may be required in some countries or regions. For devices under test not being required for double drop test, above testing points can be omitted.

[b] Drop depth is the residual voltage during the UVRT testing period which can be decided according to the requirement specified by different countries or regions (See Annex B, Clause B.2 for drop depth ratio calculation).

[c] Drop phase can be decided according to the requirement specified by different countries or regions; the value of two-phase voltage should be line voltage.

[d] The test should be carried out under specified K-factor provided by manufacturer meeting additional requirements imposed by national standards and/or local codes.

5.2 Test curve

The UVRT response characteristic shall meet the requirements of the UVRT curve specified by different countries and regions as needed (see also Annex C). An example UVRT curve is shown in Figure 4.

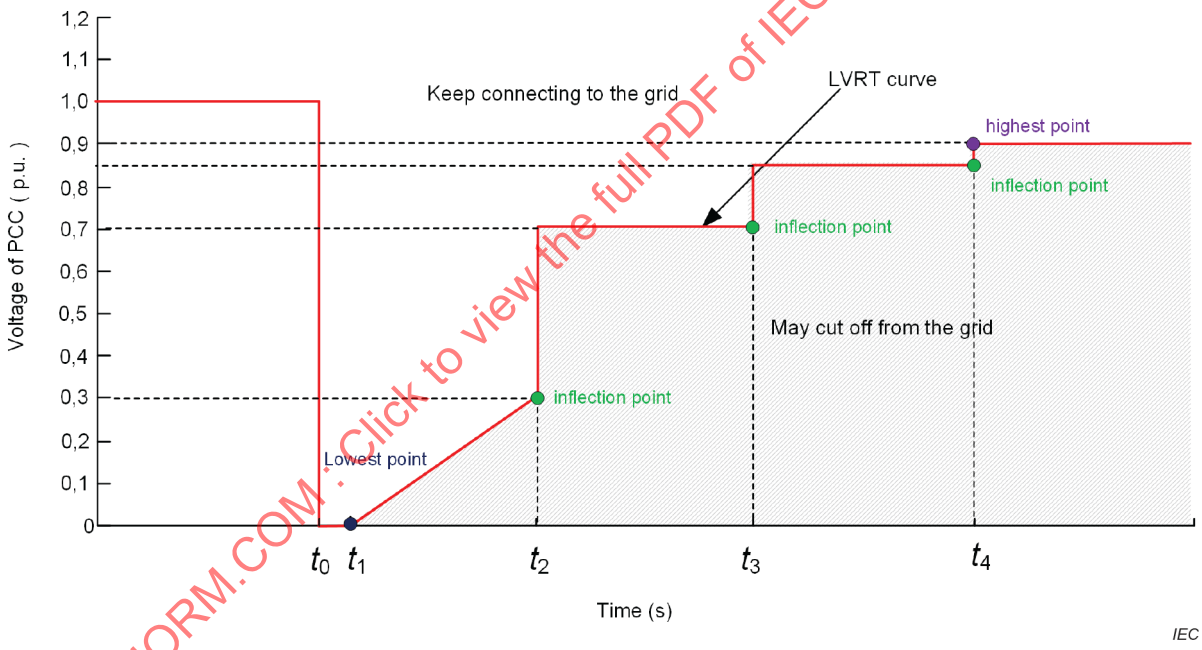

Figure 4 – UVRT curve example

The example curve shows that the EUT should keep operating during operating conditions indicated in the area above the UVRT curve. Specifically, the EUT should keep operating for (t_1-t_0) seconds without disconnecting from the grid when the interconnection voltage drops to 0 % of rated voltage; for (t_2-t_0) seconds when the voltage drops to 30 % of rated voltage; and for (t_3-t_0) seconds when the voltage drops to 70 % of rated voltage. The EUT should disconnect from the grid during operating conditions indicated within the shaded areas.

The example shows three types of points on the UVRT curve: the highest point, the lowest point and the inflection point. Tests shall be carried out at above types of points.

IECNORM.COM : Click to view the full PDF of IEC TS 62910:2020 RLV

5.3 Test procedure

5.3.1 Pre-test

Prior to the fault simulation tests, the EUT should run in normal operating mode. The selected UVRT curve should be used to identify voltage drop points, including the highest point, the lowest point and the inflection point, as well as other random points in the curve. Selection of the drop time should follow the requirement of the applicable country or region.

5.3.2 No-load test

Prior to the load test, adjust the fault emulator to simulate symmetrical and asymmetrical voltage drops without EUT connection, and validate that the measured results are as intended. This step ensures that the amplitude of voltage and drop duration can match the requirements in Figure 5.

5.3.3 Tolerance

The tolerances for drop depth and duration during the no-load test shall meet the requirement of Figure 5.

The tolerance for voltage magnitude is ±5 % of rated voltage for the period before and during the voltage drop. The tolerance for voltage magnitude is ±10 % of rated voltage during the period after voltage is recovered. The tolerances must be measured between 0 and +5 % of rated voltage for the lowest point and the inflection point under no-load conditions, and the tolerances shall be measured between −5 % and 0 of rated voltage for the highest point under no-load conditions.

The duration of each voltage drop is determined according to the requirements of the applicable UVRT curve. The tolerance range for both drop duration and rise time prefers 40 ms.

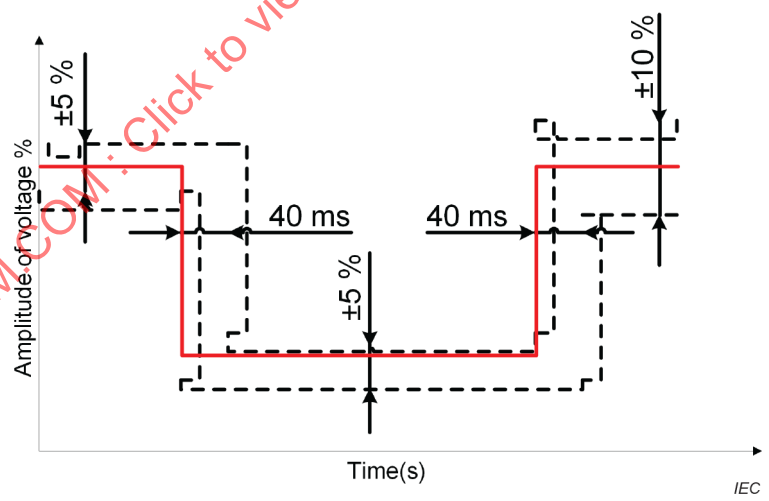

Figure 5 – Tolerance of voltage drop

5.3.4 Load test

Tests under load shall be carried out after the no-load test results successfully meet the performance requirements. The parameters of the grid fault simulator should be consistent with the no-load test.

IECNORM.COM : Click to view the full PDF of IEC TS 62910:2020 RLV

With the EUT connected to the grid fault simulator device and the PV simulator (or PV array), the output power should be set to (0,1 ~ 0,3)P_n and above 0,9P_n separately. Additional load tests at other power levels should be performed as determined by the specific country or regional requirements.

During the UVRT test, MP1, MP2, and MP3 (shown in Figure 1) shall be selected as the test points for measuring and recording the values of voltage and current.

The waveform and data of the measured voltage and current at the measuring points shall be recorded by the data acquisition device from time A prior to the voltage drop to time B after the subsequent voltage rise.

For A and B, specific data should be determined by different countries or regions.

6 Assessment criteria

The various assessment criteria are determined by the requirements of the different countries or regions. The characteristics and performance criteria for utilization are shown in Annex B, and can be referenced by a local user.

IECNORM.COM : Click to view the full PDF of IEC TS 62910:2020 RLV

Annex A
(informative)

Circuit faults and voltage drops

A.1 Fault types

The grid faults of high voltage power transmission line are commonly divided into four different types: single-phase grounded fault, two-phase short circuit fault, two-phase grounded fault, and three-phase short circuit fault. The most common one is the single-phase grounded fault, which accounting for over 90 % of the total number of the faults.

Considering the different fault phases, the short circuit paths for all types of fault are shown in Table A.1.

Table A.1 – Short-circuit paths for different fault types

Type No.	Short circuit type	Equivalent diagram	Mathematical formulae
1	Single-phase(A) short circuit grounded fault	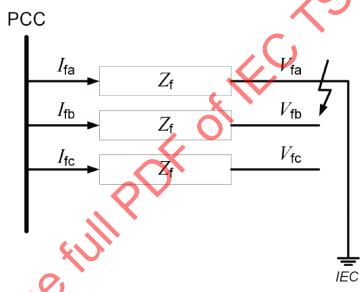	$V_{fa} = 0$ $I_{fa} \neq 0$ $I_{fb} = I_{fc} = 0$
2	Single-phase(B) short circuit grounded fault	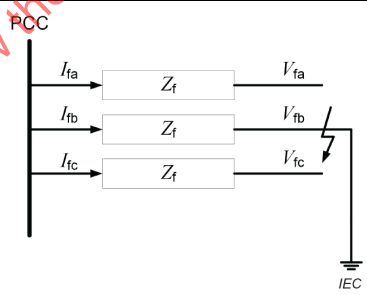	$V_{fb} = 0$ $I_{fb} \neq 0$ $I_{fa} = I_{fc} = 0$
3	Single-phase(C) short circuit grounded fault	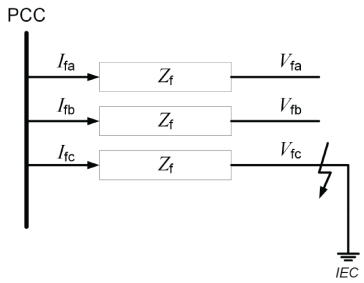	$V_{fc} = 0$ $I_{fc} \neq 0$ $I_{fa} = I_{fb} = 0$
4	Two-phase(AB) short circuit isolated fault	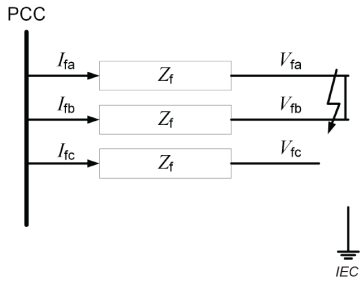	$V_{fa} = V_{fb} \neq 0$ $I_{fc} = 0$ $I_{fa} + I_{fb} = 0$

IECNORM.COM : Click to view the full PDF of IEC TS 62910:2020 RLV