INTERNATIONAL STANDARD

ISO 11119-3

Third edition
2020-11

Gas cylinders — Design, construction and testing of refillable composite gas cylinders and tubes —

Part 3: Fully wrapped fibre reinforced composite gas cylinders and tubes up to 450 l with non-load-sharing metallic or non-metallic liners or without liners

Bouteilles à gaz — Conception, construction et essais des tubes et bouteilles à gaz rechargeables en matériau composite —

Partie 3: Tubes et bouteilles à gaz entièrement bobinés en matériau composite renforcés de fibres d'une contenance allant jusqu'à 450 l avec liners non métalliques ou métalliques non structuraux, ou sans liners

STANDARDSISO.COM : Click to view the full PDF of ISO 11119-3:2020

Reference number
ISO 11119-3:2020(E)

© ISO 2020

STANDARDSISO.COM : Click to view the full PDF of ISO 11119-3:2020

COPYRIGHT PROTECTED DOCUMENT

© ISO 2020

All rights reserved. Unless otherwise specified, or required in the context of its implementation, no part of this publication may be reproduced or utilized otherwise in any form or by any means, electronic or mechanical, including photocopying, or posting on the internet or an intranet, without prior written permission. Permission can be requested from either ISO at the address below or ISO's member body in the country of the requester.

ISO copyright office
CP 401 • Ch. de Blandonnet 8
CH-1214 Vernier, Geneva
Phone: +41 22 749 01 11
Email: copyright@iso.org
Website: www.iso.org

Published in Switzerland

Contents

Page

Foreword ..... **v**
Introduction ..... **vi**
1 Scope **1**
2 Normative references **1**
3 Terms and definitions **2**
4 Symbols **4**
5 Inspection and testing **4**
6 Materials **4**
6.1 Liner materials 4
6.2 Composite materials 5
7 Design and manufacture **5**
7.1 General 5
7.2 Design submission 6
7.3 Manufacturing 8
8 Type approval procedure **8**
8.1 General requirements 8
8.2 Prototype tests 8
8.3 New design 9
8.4 Design variants 10
8.5 Type approval test procedures and criteria 14
8.5.1 Proof pressure test 14
8.5.2 Hydraulic elastic expansion test 14
8.5.3 Cylinder burst test 15
8.5.4 Ambient cycle test 15
8.5.5 Vacuum test 17
8.5.6 Environmental cycle test 18
8.5.7 Environmentally assisted stress rupture test 19
8.5.8 Flaw test 19
8.5.9 Drop/impact test 21
8.5.10 High velocity impact (gunfire) test 24
8.5.11 Fire resistance test 25
8.5.12 Permeability test 27
8.5.13 Torque test on cylinder neck boss 28
8.5.14 Salt water immersion test 28
8.5.15 Leak test 29
8.5.16 Pneumatic cycle test 29
8.5.17 Liner burst test 30
8.5.18 Resin shear strength 31
8.5.19 Glass transition temperature 31
8.6 Failure of type approval tests 31
9 Batch inspection and testing **31**
9.1 Liner 31
9.2 Failure of liner batch tests 32
9.3 Overwrap materials 32
9.4 Composite cylinder 32
9.5 Cylinder failure during type approval or batch testing 34
10 Cylinder marking **34**
10.1 General 34
10.2 Additional marking 34
Annex A (informative) **Examples of design approval certificate** **36**

STANDARDSISO.COM : Click to view the full PDF of ISO 11119-3:2020

© ISO 2020 – All rights reserved

Annex B (informative) **Specimen test reports** **37**
Annex C (informative) **Test report for equivalency** **40**
Annex D (informative) **Standardized test requirements for thermally activated pressure relief devices** **42**
Bibliography **47**

STANDARDSISO.COM : Click to view the full PDF of ISO 11119-3:2020

© ISO 2020 – All rights reserved

Foreword

ISO (the International Organization for Standardization) is a worldwide federation of national standards bodies (ISO member bodies). The work of preparing International Standards is normally carried out through ISO technical committees. Each member body interested in a subject for which a technical committee has been established has the right to be represented on that committee. International organizations, governmental and non-governmental, in liaison with ISO, also take part in the work. ISO collaborates closely with the International Electrotechnical Commission (IEC) on all matters of electrotechnical standardization.

The procedures used to develop this document and those intended for its further maintenance are described in the ISO/IEC Directives, Part 1. In particular, the different approval criteria needed for the different types of ISO documents should be noted. This document was drafted in accordance with the editorial rules of the ISO/IEC Directives, Part 2 (see www.iso.org/directives).

Attention is drawn to the possibility that some of the elements of this document may be the subject of patent rights. ISO shall not be held responsible for identifying any or all such patent rights. Details of any patent rights identified during the development of the document will be in the Introduction and/or on the ISO list of patent declarations received (see www.iso.org/patents).

Any trade name used in this document is information given for the convenience of users and does not constitute an endorsement.

For an explanation of the voluntary nature of standards, the meaning of ISO specific terms and expressions related to conformity assessment, as well as information about ISO's adherence to the World Trade Organization (WTO) principles in the Technical Barriers to Trade (TBT) see www.iso.org/iso/foreword.html.

This document was prepared by Technical Committee ISO/TC 58, *Gas cylinders*, Subcommittee SC 3, *Cylinder design*.

Any feedback or questions on this document should be directed to the user's national standards body. A complete listing of these bodies can be found at www.iso.org/members.html.

This third edition cancels and replaces the second edition (ISO 11119-3:2013), which has been technically revised. The main changes compared to the previous edition are as follows:

— References updated.

— 7.1.4 Minimum fibre stress ratios added.

— 8.5.9 Drop/impact test. Addition of new alternative test for cylinders up to and including 50 l water capacity with dedicated compressed gas service. Addition of alternative impact test for tubes 150 l and above.

— 8.5.11 Fire resistance test. Changes to the procedure to make the test more consistent. Adding a criteria for tubes above 150 l to be tested for 5 min.

— 8.5.12 Torque test is now only required for taper threads.

— References updated

— 8.5.16 Pneumatic cycle test. New procedure for the test to have a lower number of cycles but, with a significant hold time at pressure.

A list of all parts in the ISO 11119 series can be found on the ISO website.

STANDARDSISO.COM : Click to view the full PDF of ISO 11119-3:2020

© ISO 2020 – All rights reserved

Introduction

The purpose of this document is to provide a specification for the design, manufacture, inspection and testing of cylinders for world-wide usage. The objective is to balance design and economic efficiency against international acceptance and universal utility.

This document aims to eliminate the concern about climate, duplicate inspection and restrictions currently existing because of lack of definitive International Standards and is not to be construed as reflecting on the suitability of the practice of any nation or region.

This document has been written so that it is suitable to be referenced in the UN Model Regulations[1].

This document addresses the general requirements on design, construction and initial inspection and testing of pressure receptacles of the *Recommendations on the transport of dangerous goods: Model regulations* developed by the United Nations[2].

STANDARDSISO.COM : Click to view the full PDF of ISO 11119-3:2020

© ISO 2020 – All rights reserved

Gas cylinders — Design, construction and testing of refillable composite gas cylinders and tubes —

Part 3: Fully wrapped fibre reinforced composite gas cylinders and tubes up to 450 l with non-load-sharing metallic or non-metallic liners or without liners

STANDARDSISO.COM : Click to view the full PDF of ISO 11119-3:2020

1 Scope

This document specifies minimum requirements for the material, design, construction and workmanship, manufacturing processes, examination and testing at time of manufacture for:

— type 4 composite fully wrapped cylinders or tubes with a non-load sharing liner and composite reinforcement on both the cylindrical portion and the dome ends;

— type 5 fully wrapped cylinders or tubes without liners and with a test pressure of less than 60 bar and composite reinforcement on both the cylindrical portion and the dome ends;

— water capacities up to 450 l;

— for the storage and conveyance of compressed or liquefied gases;

— cylinders and tubes with composite reinforcement of carbon fibre, aramid fibre or glass fibre (or a mixture thereof) within a matrix;

— a minimum design life of 15 years.

Cylinders and tubes manufactured and tested according to this document are not intended to contain toxic, oxidizing or corrosive gases.

This document does not address the design, fitting and performance of removable protective sleeves.

NOTE 1 References to cylinders in this document include composite tubes if appropriate.

NOTE 2 ISO 11439 applies to cylinders intended for use as fuel containers on natural gas vehicles and ISO 11623 covers periodic inspection and re-testing of composite cylinders.

2 Normative references

The following documents are referred to in the text in such a way that some or all of their content constitutes requirements of this document. For dated references, only the edition cited applies. For undated references, the latest edition of the referenced document (including any amendments) applies.

ISO 527-1, *Plastics — Determination of tensile properties — Part 1: General principles*

ISO 527-2, *Plastics — Determination of tensile properties — Part 2: Test conditions for moulding and extrusion plastics*

ISO 3341, *Textile glass — Yarns — Determination of breaking force and breaking elongation*

ISO 6506-1, *Metallic materials — Brinell hardness test — Part 1: Test method*

ISO 6508-1, *Metallic materials — Rockwell hardness test — Part 1: Test method*

© ISO 2020 – All rights reserved

ISO 6892-1, *Metallic materials — Tensile testing — Part 1: Method of test at room temperature*

ISO 7225, *Gas cylinders — Precautionary labels*

ISO 7866, *Gas cylinders — Refillable seamless aluminium alloy gas cylinders — Design, construction and testing*

ISO 9809-1, *Gas cylinders — Design, construction and testing of refillable seamless steel gas cylinders and tubes — Part 1: Quenched and tempered steel cylinders and tubes with tensile strength less than 1 100 MPa*

ISO 9809-2, *Gas cylinders — Design, construction and testing of refillable seamless steel gas cylinders and tubes — Part 2: Quenched and tempered steel cylinders and tubes with tensile strength greater than or equal to 1 100 MPa*

ISO 9809-3, *Gas cylinders — Design, construction and testing of refillable seamless steel gas cylinders and tubes — Part 3: Normalized steel cylinders and tubes*

ISO 10618, *Carbon fibre — Determination of tensile properties of resin-impregnated yarn*

ISO 10286, *Gas cylinders — Terminology*

ISO 14130, *Fibre-reinforced plastic composites — Determination of apparent interlaminar shear strength by short-beam method*

ISO 11114-1, *Gas cylinders — Compatibility of cylinder and valve materials with gas contents — Part 1: Metallic materials*

ISO 11114-2, *Gas cylinders — Compatibility of cylinder and valve materials with gas contents — Part 2: Non-metallic materials*

ISO 11114-4, *Transportable gas cylinders — Compatibility of cylinder and valve materials with gas contents — Part 4: Test methods for selecting steels resistant to hydrogen embrittlement*

ISO 13769, *Gas cylinders — Stamp marking*

ASTM D7269, *Standard Test Methods for Tensile Testing of Aramid Yarns*

EN 12165, *Copper and copper alloys. Wrought and unwrought forging stock*

ASTM E1356–08, *Standard Test Method for Assignment of the Glass Transition Temperatures by Differential Scanning Calorimetry*

STANDARDSISO.COM : Click to view the full PDF of ISO 11119-3:2020

3 Terms and definitions

For the purposes of this document, the terms and definitions in ISO 10286 and the following apply.

ISO and IEC maintain terminological databases for use in standardization at the following addresses:

— ISO Online browsing platform: available at https://www.iso.org/obp

— IEC Electropedia: available at http://www.electropedia.org/

3.1
aramid fibre
continuous filaments of aramid laid up in tow form

3.2
batch
set of homogeneous items or material

Note 1 to entry: The number of items in a batch can vary according to the context in which the term is used.

© ISO 2020 – All rights reserved

3.3
batch of metallic liners
quantity of liners of the same nominal diameter, length, thickness and design, made successively from the same batch of materials, subjected to the same manufacturing process and heat treated to the same conditions of temperature and time

3.4
batch of non-metallic liners
quantity of liners of the same nominal diameter, length, thickness and design, made successively from the same batch of materials and subjected to the same manufacturing process

3.5
batch of finished cylinders
production quantity of up to 200 finished cylinders successively produced by the same manufacturing process, plus finished cylinders required for destructive testing, of the same nominal diameter, length, thickness and design

3.6
burst pressure
highest pressure reached in a liner or cylinder during a burst test

3.7
carbon fibre
continuous filaments of carbon laid up in tow form

3.8
composite overwrap
combination of fibres and matrix

3.9
dedicated gas service
service in which a cylinder is to be used only with a specified gas or gases

3.10
equivalent fibre
fibre from the same material family and similar properties to a fibre in an approved cylinder design

3.11
equivalent liner
liner that are manufactured from the same nominal raw materials, using the same process of manufacture and having the same physical structure and the same nominal physical properties as in an approved cylinder design

3.12
equivalent matrix
resin matrix from the same chemical family and similar properties to the resin matrix used in a previously prototype tested cylinder

3.14
glass fibre
continuous filaments of glass laid up in tow form

3.15
liner
inner portion of the composite cylinder, comprising a metallic or non-metallic vessel, whose purpose is both to contain the gas and transmit the gas pressure to the fibres

3.16
matrix
material used to bind and hold the fibres in place

STANDARDSISO.COM : Click to view the full PDF of ISO 11119-3:2020

© ISO 2020 – All rights reserved

3.17
non-load-sharing liner
liner that has a burst pressure less than 5 % of the nominal burst pressure of the finished composite cylinder

3.18
thermoplastic
plastics capable of being repeatedly softened by increase of temperature and hardened by decrease of temperature

3.19
thermosetting
plastics that, when cured by the application of heat or chemical means, harden permanently into a substantially infusible and insoluble product

3.20
nominal outside diameter
diameter of the cylinder specified by the manufacturer for the type approval including tolerances (e.g. ±1 %)

3.21
working pressure
p_w
settled pressure of a compressed gas at a reference temperature of 15 °C in a full gas cylinder

3.22
glass transition temperature
Tg
the temperature where a polymer substrate changes from a rigid glassy material to a soft (not melted) material, and is usually measured in terms of the stiffness, or modulus

STANDARDSISO.COM : Click to view the full PDF of ISO 11119-3:2020

4 Symbols

p_{bl}	burst pressure of liner	bar
p_b	burst pressure of finished cylinder	bar
p_h	test pressure	bar
p_{max}	maximum developed pressure at 65 °C	bar

5 Inspection and testing

To ensure that the cylinders conform to this document, they shall be subject to inspection and testing in accordance with Clauses 6, 7, 8 and 9 by an inspection body (hereafter referred to as “the inspector”) authorized to do so. Example forms of certificates that can be used are shown in Annexes A and B.

Equipment used for measurement, testing and examination during production shall be maintained and calibrated within a documented quality management system.

6 Materials

6.1 Liner materials

6.1.1 The liner (including boss assembly) shall be manufactured from materials suitable for the gas to be contained as specified in ISO 11114-1 and ISO 11114-2 where applicable. For compatibility with

 © ISO 2020 – All rights reserved

hydrogen see ISO 11114-4. Materials used to manufacture the components of boss assemblies attached to non-metallic liners shall fulfil the material performance requirements of this document.

6.1.2 The metallic liner or metallic boss component materials shall conform to the following material performance tests in the appropriate standard:

a) seamless steel liners or bosses: the material tests in ISO 9809-1, ISO 9809-2 or ISO 9809-3;

b) seamless stainless steel liners or bosses: the material tests in ISO 9809-4;

c) seamless aluminium alloy liners or boss components: Sustained load cracking test and stress corrosion cracking test (if size permits sample extraction) in line with ISO 7866;

d) brass boss components: material composition as defined in EN 12165.

Testing carried out on material sample coupons is acceptable for metallic boss components; where coupons are to be used, the coupons shall be produced from a representative sample of raw material. (i.e. if a component is manufactured from bar stock, the coupon shall be manufactured from bar stock).

6.1.3 The materials used shall be of uniform and consistent quality. The composite cylinder manufacturer shall verify that each new batch of materials has the correct properties and is of satisfactory quality, and maintain records from which the batch of materials used for the manufacture of each cylinder can be identified.

6.1.4 When a neck ring is provided, it shall be of a material compatible with that of the cylinder, and shall be securely attached by a method appropriate to the liner material.

6.2 Composite materials

6.2.1 The overwrap materials shall be carbon fibre or aramid fibre or glass fibre, or any mixture thereof.

6.2.2 The matrix shall be a polymer suited to the application, local environmental conditions and to the intended life of the product.

6.2.3 The suppliers of the filament material and the matrix component materials shall provide sufficient documentation for the composite cylinder manufacturer to be able to identify fully the batch of materials used in the manufacture of each cylinder.

6.2.4 The materials used shall be of uniform and consistent quality. The composite cylinder manufacturer shall verify that each new batch of materials has the correct properties and is of satisfactory quality, and maintain records from which the batch of materials used for the manufacture of each cylinder can be identified. A certificate of conformance from the material manufacturer is considered acceptable for the purposes of verification.

6.2.5 Batches of materials shall be identified and documented to the satisfaction of the inspector.

7 Design and manufacture

7.1 General

7.1.1 A type 4 fully-wrapped composite gas cylinder with non-load-sharing metallic or non-metallic liner shall comprise:

a) an internal metal or non-metallic liner which carries no significant load;

STANDARDSISO.COM : Click to view the full PDF of ISO 11119-3:2020

b) metallic boss(es) for thread connections, where these are part of the design;

c) a composite overwrap formed by layers of continuous fibres in a matrix; and

d) an optional external protection system.

Where necessary, care shall be taken to ensure that there is no adverse reaction between the liner and the reinforcing fibre by the application of a suitable protective coating to the liner prior to the wrapping process.

7.1.2 A type 5 fully-wrapped cylinder without liner with a test pressure of less than 60 bar shall comprise:

a) metallic boss(es) for thread connections, where these are part of the design;

b) a composite overwrap formed by layers of continuous fibres in a matrix and

c) an optional external protection system.

Type 5 cylinders and tubes made from two or more parts joined together are not permitted under this document.

7.1.3 Cylinders shall be designed with one or two openings along the central axis only. Threads shall extend completely through the neck or have sufficient threads to allow full engagement of the valve.

7.1.4 The cylinders shall be designed for high reliability under sustained load and cyclic loading. Therefore, it is necessary to take account of the properties of the individual composite fibres and to establish their respective minimum fibre stress ratios.

The fibre stress ratio is defined as the fibre stress at design minimum burst pressure divided by the fibre stress at 2/3 test pressure.

The minimum fibre stress ratios shall be as follows:

— for glass: 3,6;

— for aramid: 3,1;

— for carbon: 2,4;

The fibre stress ratio for type 4 and type 5 cylinders can be confirmed by burst testing. The strength of the individual types of fibres used in hybrid construction may be verified by testing of containers reinforced with a single type of fibre. In a hybrid construction, the applicable stress ratio requirements shall be met in one of the two following ways:

a) if load sharing between the various fibre reinforcing materials is considered a fundamental part of the design, each fibre shall meet the stated stress ratio requirements;

b) if load sharing between fibres is not considered as a fundamental part of the design, then one of the reinforcing fibres shall be capable of meeting the stress ratio requirements even if all other fibre reinforcing materials are removed.

7.1.5 Examples of certificates are shown in Annexes A and B.

7.2 Design submission

7.2.1 The design submission for each new design of cylinder shall include a detailed drawing, along with documentation of the design including manufacturing and inspection particulars, as detailed in 7.2.2, 7.2.3 and 7.2.4.

STANDARDSISO.COM : Click to view the full PDF of ISO 11119-3:2020

 © ISO 2020 – All rights reserved

7.2.2 Documentation for the liner and metal boss(es) shall include (but not be limited to):

a) material(s), including limits of chemical analysis;

b) dimensions, minimum thickness, straightness and out-of-roundness with tolerances;

c) process and specification of manufacture;

d) heat-treatment, temperatures, duration and tolerances;

e) inspection procedures (minimum requirements);

f) material properties;

g) dimensional details of valve threads and any other permanent features;

h) method of sealing boss to liner for bonded bosses.

7.2.3 Documentation for composite overwrap shall include (but not be limited to):

a) fibre material, specification and mechanical properties requirements;

b) minimum composite thickness;

c) thermosetting matrix: specifications (including resin, curing agent and accelerator), and resin bath temperature where applicable;

d) thermoplastic matrix system: main component materials, specifications and process temperatures;

e) overwrap construction including the number of strands used, number of layers and layer orientation and tensioning of the fibre at wrapping (where applicable);

f) curing process, temperatures, duration and tolerances;

g) adhesive system, main components, curing agent, accelerator, materials and specifications where applicable.

7.2.4 Documentation for the composite cylinder shall include (but not be limited to):

a) nominal water capacity in litres at ambient conditions;

b) list of intended contents if intended for dedicated gas service;

c) working pressure, p_w (if applicable), that shall not exceed 2/3 times test pressure;

d) test pressure, p_h;

e) maximum developed pressure at 65 °C for specific dedicated gas(es), p_{max};

f) minimum design burst pressure;

g) design life in years; cylinders with a test pressure of less than 60 bar shall have a non-limited design life;

h) nominal weight of the finished composite cylinder, including tolerances;

i) for cylinders without liners, the method of sealing the boss to cylinder (if applicable);

j) details of components which are permanently attached and form part of the qualified design (e.g. neck rings, protective boots, etc).

STANDARDSISO.COM : Click to view the full PDF of ISO 11119-3:2020

© ISO 2020 – All rights reserved

7.3 Manufacturing

7.3.1 The liner and metal bosses, where incorporated, shall be manufactured in accordance with the manufacturer's design (see 7.2.2).

7.3.2 The composite cylinder shall be fabricated from a non-load-sharing liner, or fabricated on a disposable mandrel, fully over-wrapped with layers of continuous fibres in a matrix applied under controlled tension to develop the design composite thickness as specified in 7.2.3.

Liners can be stripped and re-wound provided that the overwrap has not been cured. The liner shall not be overwrapped if it has been damaged or scored by the stripping process.

7.3.3 After wrapping is completed the composite shall be cured (if appropriate) using a controlled temperature profile as specified in the documentation in 7.2.3. The maximum temperature shall be such that the mechanical properties of the liner material, if fitted, and composite overwrap are not adversely affected.

NOTE If cylinders are subjected to fibre tensioning during wrapping, the tensioning is recorded or monitored.

8 Type approval procedure

8.1 General requirements

Each new cylinder design shall be submitted by the manufacturer to the inspector. The type approval tests detailed in 8.2 shall be performed, under the supervision of the inspector, on each new cylinder design or design variant.

8.2 Prototype tests

8.2.1 A minimum of 30 cylinders of the new design shall be made available for prototype testing. Upon successful completion of all prototype tests, the remaining untested cylinders from the prototype qualification batch can be used for service.

8.2.2 If, for special applications, the total number of cylinders required is less than 30, enough cylinders shall be made to complete the prototype tests required, in addition to the production quantity. Then the approval validity shall be limited to this batch only.

For a limited design change (design variant), in accordance with Table 1, a reduced number of cylinders shall be selected by the inspector.

8.2.3 The batch of liners, prior to being wrapped, shall conform to the design requirements and shall be inspected and tested in accordance with 9.1.

8.2.4 The composite material(s), prior to the cylinders being wrapped, shall conform to the design requirements and shall be tested in accordance with 9.3.

8.2.5 Tests for a new cylinder design shall be supervised by an inspector and shall consist of:

a) hydraulic proof pressure test, in accordance with 8.5.1, or hydraulic elastic expansion test, in accordance with 8.5.2;

b) cylinder burst test in accordance with 8.5.3;

c) ambient temperature cycle test, in accordance with 8.5.4;

STANDARDSISO.COM : Click to view the full PDF of ISO 11119-3:2020

 © ISO 2020 – All rights reserved

d) environmental cycle test, in accordance with 8.5.6;

e) flaw test, in accordance with 8.5.8;

f) drop/impact test, in accordance with 8.5.9;

g) high velocity impact (gunfire) test, in accordance with 8.5.10;

h) torque test on cylinder neck boss in accordance with 8.5.13;

i) leak test in accordance with 8.5.15;

j) pneumatic cycle test in accordance with 8.5.16;

k) resin shear strength in accordance with 8.5.18.

l) glass transition test in accordance with 8.5.14;

8.2.6 Tests that are optional depending upon the design and intended use of the cylinder are:

a) vacuum test in accordance with 8.5.5 (mandatory if a cylinder is to be exposed to a vacuum in service);

b) environmentally assisted stress rupture test in accordance with 8.5.7 (mandatory for cylinders with load sharing glass or aramid fibre);

c) permeability test in accordance with 8.5.12 if cylinders are manufactured with non-metallic liners or without liners;

d) fire resistance test in accordance with 8.5.11;

e) salt water immersion test in accordance with 8.5.14 (mandatory for cylinders used in underwater applications).

8.2.7 For approval of a design variant as specified in 8.4, it is only necessary to carry out the tests as prescribed in Table 1. Under supervision of the inspector. A cylinder, approval by a reduced series of tests shall not be used as a basis for a second design variant approval with a reduced set of tests (i.e. multiple changes from an approved design are not permitted) although individual test results can be used as applicable (see 8.4.2).

8.2.8 Tests can be combined such that one cylinder can be used for more than one test. For example, the cylinder burst test in 8.5.9 Drop/impact test can be used to satisfy the requirement of 8.5.3 Burst test.

8.2.9 If the results of the above prototype tests are satisfactory, the inspector shall issue a design approval certificate a typical example of which is given in Annex A.

8.2.10 After completion of the tests the cylinders shall be destroyed or made incapable of holding pressure.

8.3 New design

8.3.1 This clause specifies when a composite cylinder is a new design for the purposes of this document. Subclause 8.4 specifies when a composite cylinder is a design variant.

STANDARDSISO.COM : Click to view the full PDF of ISO 11119-3:2020

8.3.2 A new cylinder design requires full type approval testing. A cylinder shall be considered to be of a new design compared with an existing approved design when:

a) it is manufactured in a different factory. A relocation of a factory does not require a new cylinder design approval provided all equipment and procedures remain the same as for the original design approval;

b) it is manufactured by a process that is significantly different from the process used in the design type approval. A significant change is regarded as a change that would give rise to a measurable change in the performance of the liner and/or finished cylinder. The inspector determines when a change in process or design or manufacture is significantly different from the original qualified design;

c) the nominal outside diameter has changed more than 50 % from the qualified design;

d) a fibre of the same specification classification and mechanical properties but with a different linear density shall not be considered a new fibre type. Minor changes in the wrapping pattern shall not be considered to be a new design;

e) the cylinder is manufactured with a new fibre type. A fibre shall be considered to be of a new fibre type when:

   1) the fibre is of a different classification (e.g. glass, aramid or carbon);

   2) the fibre is produced from a different precursor [e.g. Polyacrylonitrile (PAN) or pitch for carbon];

   3) the fibre is not equivalent [see 8.4.1 i)] to the fibre in the original design;

f) the matrix materials (i.e. resin, curing agent, accelerator) are different and not chemically equivalent to the original design (e.g. a change from an epoxy to a polyester);

g) the test pressure has increased more than 60 % from the qualified design.

8.3.3 A cylinder shall also be considered to be of a new design compared with an existing approved design if the method of liner manufacture or liner design has changed and when:

a) it is manufactured from a material of different composition or composition limits from that used in the original type tests;

b) the material properties are outside the original design limits;

c) it is manufactured by a different process.

8.4 Design variants

8.4.1 For cylinders that are variants of another design, a reduced type approval testing programme is required as specified in Table 1. A cylinder shall be considered to be a design variant if changes are limited to the following.

a) The nominal length of the cylinder has changed by more than 5 %.

b) The nominal outside diameter has changed by 50 % or less.

c) There is a change in the design test pressure up to and including 60 %. Where a cylinder is to be used and marked for a lower test pressure than that for which design approval has been given, it is not deemed to be of a new design or design variant.

d) There have been changes to the composite thickness outside the tolerances provided in the design submission or a change in the wrap pattern other than those necessary to accommodate the changes of diameter and/or length.

STANDARDSISO.COM : Click to view the full PDF of ISO 11119-3:2020

 © ISO 2020 – All rights reserved

e) When equivalent matrix materials are used: epoxy, vinyl ester, and polyester systems are not chemically equivalent to each other, but two epoxy-based systems would be considered chemically equivalent as long as the minimum requirements of interlaminar shear testing are achieved and has a glass transition temperature (Tg) equal to or higher than the system being replaced.

f) The minimum wall thickness of the liner has changed by more than 10 %.

g) The design or method of joining the neck boss to the liner has changed.

h) When equivalent overwrapping fibres are used:

1) equivalent fibres are manufactured from the same nominal raw materials, using the same process of manufacture and having the same physical structure and the same nominal physical properties, and where the average tensile strength and modulus is within ±5 % of the fibre properties in an approved cylinder design. Carbon fibres made from the same precursor can be equivalent, Aramid, carbon and glass fibres are not equivalent;

2) where a new equivalent fibre has been prototype tested for an existing design, then all the manufacturer's existing prototype tested designs are regarded as prototype tested with the new fibre without the need for any additional prototype testing.

i) When an equivalent liner is used:

1) equivalent liners are manufactured from the same nominal raw materials, using the same process of manufacture and having the same physical structure and the same nominal physical properties as in an approved cylinder design;

2) the equivalent liner material shall be subjected to the material tests specified in 9.1.2 for metal liners and 9.1.3 for polymer liners and the liner burst test specified in 8.5.18 and shall meet the minimum requirements specified in 7.2.2 and the criteria of 8.5.18;

3) where a new equivalent liner has been prototype tested for an existing design, all the manufacturer's existing prototype tested designs are regarded as prototype tested with the new liner without the need for any additional prototype testing.

j) When the cylinder thread has changed: when a cylinder design has only a different thread compared to an approved design only the torque test, in accordance with 8.5.13, shall be performed.

8.4.2 A cylinder approval by a reduced series of tests (a "design variant") shall not be used as a basis for a second design variant approval with a reduced set of tests (i.e. multiple changes from an approved design are not permitted). If a test has been conducted on a design variant (A) that falls within the testing requirements for a second variant (B), then the result for (A) can be applied to the new design variant (B) test programme. However, design variant (A) shall not be used as the reference for determining the testing required for any new design variant.

8.4.3 Where a design variant involves more than one parameter change, all the tests required by those parameter changes shall be performed once only.

8.4.4 The inspector shall determine the level of reduced testing if not defined in Table 1, but a fully approved design shall always be used as a reference for the new design variant (i.e. new design variants shall not be approved by reference only to a previous design variant).

8.4.5 Annex C is an example of a certificate that can be used to document the testing of liner materials and/or composite materials to prove equivalency with approved materials from a previous type approval.

STANDARDSISO.COM : Click to view the full PDF of ISO 11119-3:2020

Table 1 — Type approval tests

Test No.	Test	New design	Design variant changes												
			Length		Diameter		Liner thick-ness >10 %	Equi-valent fibre	Test pressure		Compos-ite thickness	Liner base form	Neck boss	Equi-valent matrix	Thread
			>5 % ≤50 %	>50 %	≤20 %	>20 % ≤50 %			≤20 %	>20 % ≤60 %					
9.1	Liner material test	×													
8.5.18	Resin shear test	×												×	
9.3	Overwrap material tests	×						×		×				×	
8.5.1 8.5.2	Proof test or Hydraulic elastic expansion test	×	×	×	×	×	×	×	×	×	×	x	×	×	
8.5.3	Cylinder burst	×	×	×	×	×	×	×	×	×	×	x	×	×	
8.5.4	Ambient cycle	×	×	×	×	×	×	×	×	×	×	x	×	×	
8.5.5	Vacuum[c,e]	×				×	×[d]						×		
8.5.6	Environmental cycle	×											×	×	
8.5.7	Stress rupture test[c]	×								×	×[g]	×	×		
8.5.8	Flaw	×				×					×[g]				
8.5.9	Drop/impact	×		×		×					×[g]		×		
8.5.10	High velocity impact	×				×[a]					×[g]				
8.5.11	Fire resistance[c]	×		×		×							×[b]		
8.5.12	Permeability[c,e]	×				×	×						×		
8.5.13	Torque[f]	×											×		×
8.5.14	Salt water[c]	×											×	×	
8.5.15	Leak	×			×	×	×						×		

[a] Test to be conducted for reduction in diameter only or if an increase in diameter requires a larger calibre bullet.

[b] Only if cylinder in previous fire test leaked at the neck boss.

[c] Optional test required according to the design and intended use of the cylinder.

[d] For liner thickness decrease only.

[e] For non-metallic liners only.

[f] When a cylinder design has only a different thread compared to an approved design only the torque test, in accordance with 8.5.13, shall be performed.

[g] Conducted with a composite thickness decrease only.

STANDARDSISO.COM : Click to view the full PDF of ISO 11119-3:2020

© ISO 2020 – All rights reserved

Table 1 *(continued)*

Test No.	Test	New design	Design variant changes												
			Length		Diameter		Liner thick-ness >10 %	Equi-valent fibre	Test pressure		Compos-ite thickness	Liner base form	Neck boss	Equi-valent matrix	Thread
			>5 % ≤50 %	>50 %	≤20 %	>20 % ≤50 %			≤20 %	>20 % ≤60 %					
8.5.16	Pneumatic cycle	×		×		×	×								
8.5.17	Liner burst test	×		×		×	×								
8.5.18	Glass transition temp	×												×	

[a] Test to be conducted for reduction in diameter only or if an increase in diameter requires a larger calibre bullet.

[b] Only if cylinder in previous fire test leaked at the neck boss.

[c] Optional test required according to the design and intended use of the cylinder.

[d] For liner thickness decrease only.

[e] For non-metallic liners only.

[f] When a cylinder design has only a different thread compared to an approved design only the torque test, in accordance with 8.5.13, shall be performed.

[g] Conducted with a composite thickness decrease only.

STANDARDSISO.COM : Click to view the full PDF of ISO 11119-3:2020

© ISO 2020 – All rights reserved

8.5 Type approval test procedures and criteria

8.5.1 Proof pressure test

8.5.1.1 Procedure

When carrying out the pressure test, a suitable fluid shall be used as the test medium. This can include liquids such as water or oil and gases such as air or nitrogen). This test requires that the pressure in the cylinder be increased gradually and regularly until the test pressure, p_h, is reached. For cylinders up to 150 l the cylinder test pressure shall be held for at least 30 s with the cylinder isolated from the pressure source. For tubes of 150 l and above, the cylinder test pressure shall be held for at least 120 s with the cylinder isolated from the pressure source. During this time, there shall be no decrease in the recorded pressure (other than due to temperature variation of the test medium) or evidence of any leakage. Adequate safety precautions shall be taken during the test.

If leakage occurs in the piping or fittings, the cylinders shall be retested after repairing such leakages.

The limit deviation on attaining test pressure shall be (p_h + 3) % or $\left(p_h{}^{+10}_{0}\right)$ bar, whichever is the lower.

Pressure gauges with the appropriate accuracy shall be used.

All internal surfaces of cylinders shall be dried (to ensure no free water) immediately after testing.

Alternatively, a pneumatic pressure test can be used provided that appropriate measures are taken to ensure safe operation and to contain any energy that can be released, which is considerably more than in the hydraulic test.

8.5.1.2 Criteria

The cylinder shall be rejected if there are leaks, failure to hold pressure or visible permanent deformation after the cylinder is depressurized.

NOTE Cracking of resin is not necessarily a sign of permanent deformation.

8.5.2 Hydraulic elastic expansion test

8.5.2.1 Procedure

When carrying out the pressure test, a suitable fluid (e.g. normally water) shall be used as the test medium. This test requires that the pressure in the cylinder be increased gradually and regularly until the test pressure, p_h, is reached. For cylinders up to 150 l the cylinder test pressure shall be held for at least 30 s with the cylinder isolated from the pressure source. For tubes of 150 l and above, the cylinder test pressure shall be held for at least 120 s with the cylinder isolated from the pressure source. During this time, there shall be no decrease in the recorded pressure (within the measuring tolerance of the gauge) or evidence of any leakage. Adequate safety precautions shall be taken during the test.

If leakage occurs in the piping or fittings, the cylinders shall be re-tested after repairing such leakages.

The elastic expansion shall be determined from the difference in volume measured at 10 % test pressure, p_h, and at the test pressure, p_h, and recorded.

The limit deviation on attaining test pressure shall be test pressure (p_h + 3) % or $\left(p_h{}^{+10}_{0}\right)$ bar whichever is the lower.

All internal surfaces of cylinders shall be dried (to ensure no free water) immediately after testing.

STANDARDSISO.COM : Click to view the full PDF of ISO 11119-3:2020

 © ISO 2020 – All rights reserved

8.5.2.2 Criteria

The cylinder shall be rejected if either:

a) it shows an elastic expansion in excess of 110 % of the average elastic expansion for the batch at manufacture; or

b) if there are leaks or failure to hold pressure.

8.5.3 Cylinder burst test

8.5.3.1 Procedure

Three cylinders shall be tested hydraulically, to destruction, by pressurizing at a rate of no more than 10 bar/s. The test shall be carried out under ambient conditions. Before starting the test, it shall be ensured that no air is trapped within the system.

The following parameters shall be monitored and recorded:

a) burst pressure;

b) mode of failure for cylinders without liners;

c) pressure/time curve or pressure/volume curve.

8.5.3.2 Criteria

a) The burst pressure shall exceed the minimum design burst pressure specified by the cylinder manufacturer (see 7.2.4).

b) The burst pressure, *p*b, for cylinders with carbon fibre reinforcement shall be not less than 2,0 × p_h, where p_h is the test pressure.

c) The burst pressure, *p*b, for cylinders with aramid fibre reinforcement shall be not less than p_h × 2,1.

d) The burst pressure, *p*b, for cylinders with glass fibre reinforcement shall be not less than p_h × 2,4.

8.5.4 Ambient cycle test

8.5.4.1 For cylinders with test pressure equal to, or greater than, 60 bar

8.5.4.1.1 General

Where a cylinder is intended for use only with one or more specific gases the design can be designated for dedicated gas use. The gases permitted in the cylinder shall be identified clearly on the cylinder label (see 10.2). Cylinders tested to test pressure, p_h, or maximum developed pressure, p_{max}, shall have a specified design life from 15 years to non-limited life.

8.5.4.1.2 Procedure

Two cylinders shall be subjected to a hydraulic pressure cycle test to:

a) test pressure, p_h, for unspecified gas service;

b) maximum developed pressure at 65 °C, p_{max}, for the dedicated gas which has the greatest developed pressure.

The test shall be carried out using a non-corrosive fluid under ambient conditions, subjecting the cylinders to successive reversals at an upper cyclic pressure that is equal to the hydraulic test pressure, p_h, or maximum developed pressure at 65 °C, p_{max} as appropriate.

STANDARDSISO.COM : Click to view the full PDF of ISO 11119-3:2020

© ISO 2020 – All rights reserved

The value of the lower cyclic pressure shall not exceed 10 % of the upper cyclic pressure, but shall have an absolute maximum of 30 bar. The frequency of reversals shall not exceed 0,25 Hz (15 cycles per minute). The temperature on the outside surface of the cylinder shall not exceed 50 °C during the test.

The following parameters shall be monitored and recorded:

a) temperature of the cylinder;

b) number of cycles achieving upper cyclic pressure;

c) minimum and maximum cyclic pressures;

d) cycle frequency;

e) test medium used;

f) mode of failure, if appropriate.

8.5.4.1.3 Criteria

As determined with Formulae (1) and (2), both cylinders shall withstand, without failure by burst or leakage:

— N pressurization cycles to test pressure, p_h;

— N_d pressurization cycles to maximum developed pressure, p_{max},

where

$$N = t \times 250 \quad (1)$$

$$N_d = t \times 500 \quad (2)$$

where t is the number of years of design life, which shall be a whole number, not less than 15.

The test shall continue for a further N, N_w or N_d, cycles, or until the cylinder fails by leakage, whichever is the sooner. In either case, the cylinder shall be deemed to have passed the test. However, if failure during this second part of the test is by burst, then the cylinder shall have failed the test (see Table 2).

Table 2 — Criteria for ambient cycle test

	First part	Second part
Number of cycles	0 to N	N to $2N$ but $2N$ no more than 12 000
	0 to N_d	N_d to $2N_d$ but $2N_d$ no more than 24 000
Criteria	No leakage/burst = Pass	
	No leakage or burst	Leakage = Pass
	Pass first part	Burst = Fail

If the cylinder is designed to pass 12 000 hydraulic cycles to test pressure or 24 000 cycles to maximum developed pressure and achieves this level in the test it shall not be necessary to limit the design life of the cylinder.

8.5.4.2 For cylinders with test pressure less than 60 bar

8.5.4.2.1 Procedure

Two cylinders shall be subjected to a hydraulic pressure cycle test to test pressure.

STANDARDSISO.COM : Click to view the full PDF of ISO 11119-3:2020

 © ISO 2020 – All rights reserved

The test shall be performed using a non-corrosive fluid under ambient conditions, subjecting the cylinders to successive reversals at an upper cyclic pressure which is equal to the hydraulic test pressure, p_h.

The value of the lower cyclic pressure shall not exceed 10 % of the upper cyclic pressure. The frequency of reversals of pressure shall not exceed 0,25 Hz (15 cycles per minute). The temperature on the outside surface of the cylinder shall not exceed 50 °C during the test.

The following parameters shall be monitored and recorded:

a) temperature of the cylinder;

b) number of cycles achieving upper cyclic pressure;

c) minimum and maximum cyclic pressures;

d) cycle frequency;

e) test medium used;

f) mode of failure, if appropriate.

8.5.4.2.2 Criteria

Both cylinders shall withstand 12 000 pressurization cycles to test pressure, p_h. If the cylinder is designed to pass 12 000 hydraulic cycles to test pressure and achieves this level in the test, it shall not be necessary to limit the design life of the cylinder.

8.5.5 Vacuum test

8.5.5.1 General

When this test is carried out, one cylinder shall be subjected to a vacuum test prior to the environmental cycle test (see 8.5.6). When this test is not carried out a warning shall be permanently marked on the cylinder label (see 10.2).

8.5.5.2 Procedure

The cylinder shall be subjected to a series of cycles from atmospheric pressure to a vacuum.

The contents (inert gas or air) shall be reduced from atmospheric pressure to a pressure of 0,2 bar absolute at ambient temperature. The vacuum shall be maintained at this level for at least 1 min.

The pressure in the cylinder shall be returned to atmospheric pressure. The total number of cycles shall be 50.

The following parameters shall be monitored and recorded:

a) number of cycles achieving lower cyclic pressure;

b) minimum and maximum cyclic pressures;

c) cycle frequency;

d) results of visual inspection.

8.5.5.3 Criteria

After cycling, the interior of the liner shall be inspected for damage. Any evidence of disbonding, folding or other damage shall be noted. If the cylinder then passes the environmental cycle test (see 8.5.6), it shall also be deemed to have passed the vacuum test.

STANDARDSISO.COM : Click to view the full PDF of ISO 11119-3:2020

8.5.6 Environmental cycle test

8.5.6.1 General

When the vacuum test (see 8.5.5) is performed, the vacuum-tested cylinder shall be used for the environmental cycle test. When the vacuum test is not performed, a warning shall be permanently marked on the cylinder label (see 10.2).

The tests in this clause shall be performed in an environmental chamber.

8.5.6.2 Procedure

One cylinder, without paint or removable protective coating shall be tested as follows.

Condition cylinder and contained hydraulic pressurizing medium for 48 h at atmospheric pressure, at a temperature between 60 °C and 70 °C and at a relative humidity greater than or equal to 90 %. The intent of this requirement can be met by spraying with a continuous fine spray or mist of water in a chamber held between 60 °C and 70 °C.

The hydraulic pressurizing medium external to the cylinder under test shall start the cycle testing at ambient temperature. Hydraulically apply 5 000 cycles from a pressure approximately equal to atmospheric pressure to 2/3 of the test pressure, p_h. The cylinder skin temperature shall be maintained at between 60 °C and 70 °C by regulating the environmental chamber and the cycling frequency. The cycling frequency shall not exceed 10 cycles per minute.

Release the pressure and stabilize the cylinder at 20 °C approximately.

Stabilize the cylinder and the contained pressurizing medium until the temperature is between −40 °C and −50 °C. The hydraulic pressurizing medium external to the cylinder under test shall start the cycle testing at ambient temperature. Apply 5 000 cycles from a pressure less than 10 % of working pressure to 2/3 of the test pressure, p_h. The cylinder skin temperature shall be maintained at between −40 °C and −50 °C by regulating the environmental chamber and the cycling frequency. The cycling frequency shall not exceed 10 cycles per minute. The fluid shall also be selected to ensure that it functions at the temperatures specified in the various cycle tests.

Release the pressure and stabilize the cylinder at approximately 20 °C.

Type 4 cylinders shall be subjected to the leak test (see 8.5.15).

On completion of these tests the cylinder shall be subjected to the burst test (see 8.5.3).

Parameters to monitor and record:

a) temperatures during each part;

b) humidity during the first part of test;

c) test medium used;

d) number of cycles, achieving upper cyclic pressure, at each stage;

e) minimum and maximum cyclic pressures;

f) cycle frequency;

g) the parameters specified in 8.5.3.

8.5.6.3 Criteria

a) The burst pressure, p_b, for cylinders with carbon fibre reinforcement shall be not less than 1,7 × p_h.

b) The burst pressure, p_b, for cylinders with aramid fibre reinforcement shall be not less than 1,9 × p_h.

STANDARDSISO.COM : Click to view the full PDF of ISO 11119-3:2020

 © ISO 2020 – All rights reserved

c) The burst pressure, p_b, for cylinders with glass fibre reinforcement shall be not less than 2,.2 × p_h.

8.5.7 Environmentally assisted stress rupture test

8.5.7.1 Procedure

This test shall be conducted only on cylinders where glass or aramid fibre has a load sharing application.

For a design life of up to 20 years, two cylinders shall be hydraulically pressurized to test pressure, p_h, and shall be maintained at this pressure for 1 000 h. For a design life equal to or greater than 20 years, the test shall run for 2 000 h. The test shall be conducted at a minimum temperature of 70 °C ± 5 °C and a relative humidity equal to or greater than 95 %.

The use of a water spray or suspending the cylinder over a water bath are both methods that can be used to meet the requirements of this test.

After this test, the cylinders shall be subjected to the leak test (see 8.5.15) and the burst test (see 8.5.3).

The following parameters shall be monitored and recorded:

a) temperature and relative humidity at least twice a day;

b) cylinder pressure at least twice a day;

c) parameters specified in 8.5.3.1.

8.5.7.2 Criteria

The cylinder shall not exhibit any visible deformation or loose fibres (unravelling) and shall satisfy the criteria of the leak test (see 8.5.15). The burst pressure burst shall be equal to or greater than 100 % of the minimum burst level required in the burst test (8.5.4) for the relevant fibre.

8.5.8 Flaw test

8.5.8.1 Procedure

Two cylinders shall be tested. One longitudinal flaw shall be cut into each cylinder, in the mid-length of the cylindrical wall of the cylinder in accordance with Figure 1. The flaw shall be made with a 1 mm thick cutter to a depth equal to at least 40 % of the composite thickness (measured from the outside surface of the finished cylinder), but no greater than 2,5 mm deep and to a length between the centres of the cutter equal to five times the composite thickness.

A second transverse flaw of the same dimensions shall be cut into each cylinder in the mid-length of the cylindrical wall approximately 120° around the circumference from the other flaw in accordance with Figure 1.

STANDARDSISO.COM : Click to view the full PDF of ISO 11119-3:2020

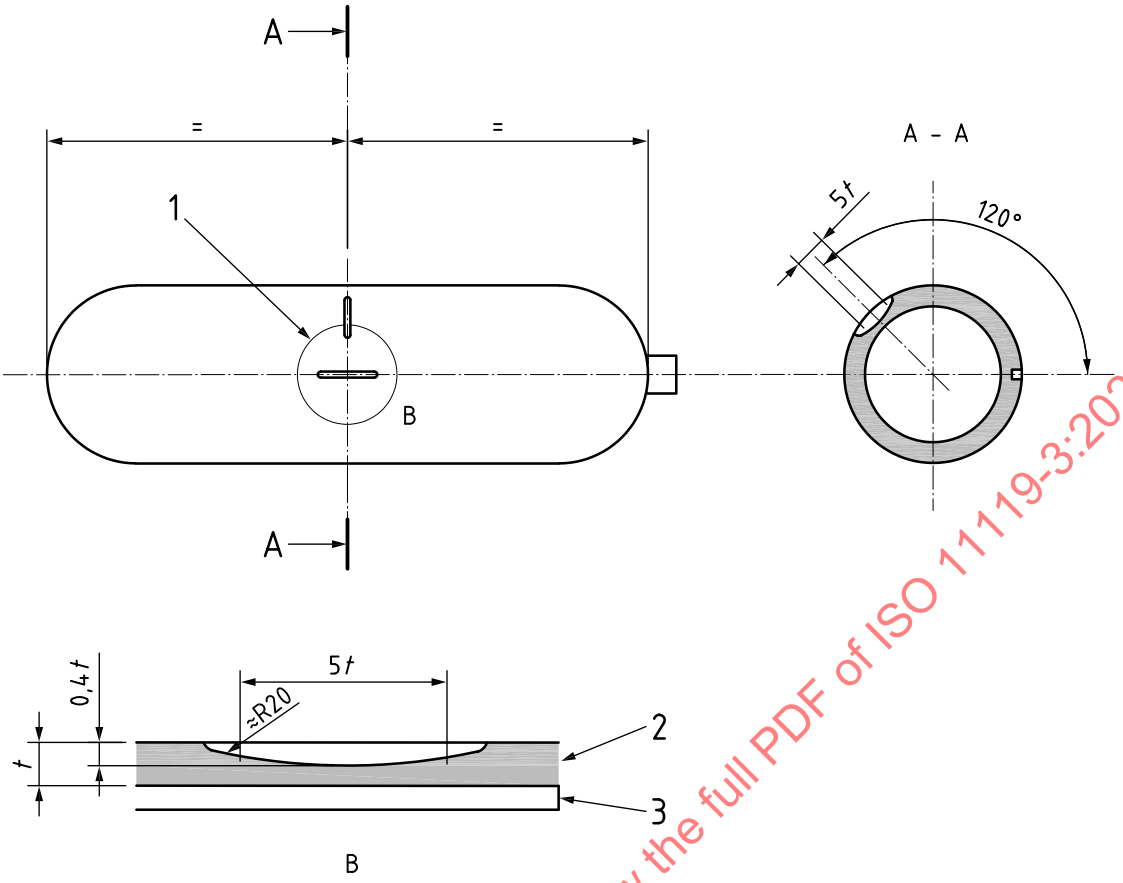

Key

1 flaw, 1 mm wide

2 wrap

3 liner

Figure 1 — Flaw test procedure

One cylinder shall be subjected to the burst test specified in 8.5.3.

The other cylinder shall be subjected to the ambient cycle test specified in 8.5.4, but the upper cyclic pressure shall be 2/3 of the test pressure, p_h, and the test shall be suspended after 5 000 cycles if the cylinder has not failed.

a) The parameters that shall be monitored and recorded are dimensions of flaws;

b) temperature of the cylinder;

c) number of cycles achieving upper cyclic pressure;

d) minimum and maximum cyclic pressures;

e) cycle frequency;

f) test medium used;

g) mode of failure, if appropriate.

8.5.8.2 Criteria

First cylinder: burst pressure, p_b, shall be equal to or greater than the test pressure, $p_h \times 4/3$.

STANDARDSISO.COM : Click to view the full PDF of ISO 11119-3:2020

 © ISO 2020 – All rights reserved

Second cylinder: the cylinder shall withstand at least 1 000 pressure cycles to 2/3 of the test pressure, p_h, without leakage. If the cylinder fails by leakage after 1 000 cycles, it shall be deemed to have passed the test. However, if failure during this second half of the test is by burst, then the cylinder shall have failed the test.

8.5.9 Drop/impact test

8.5.9.1 General

The test procedure in 8.5.9.2 shall be used for cylinders up to and including 50 l water capacity with unspecified gas service and cylinders with dedicated liquefied gas service.

The test procedure in 8.5.9.3 shall be used for cylinders over 50 l water capacity.

The test procedure in 8.5.9.4 is an alternative for cylinders up to and including 50 l water capacity used in designated compressed gas service.

The test procedure in 8.5.9.5 is an alternative to 8.5.9.4 for tubes of 150 l water capacity and above.

Where a cylinder is intended for use only with one or more specific gases, the design can be designated for dedicated gas use. The gases permitted in the cylinder shall be identified clearly on the cylinder label (see 10.2).

8.5.9.2 For cylinders up to and including 50 l water capacity with unspecified gas service and cylinders with liquefied gas service

8.5.9.2.1 Procedure

Two cylinders shall be filled with water to 50 % capacity and fitted with a steel or aluminium plug with diameter no greater than the neck diameter, to protect threads and sealing surfaces.

Both cylinders shall be dropped twice, in each of the five positions shown in Figure 2, from a height of 1,2 m, on to a smooth concrete surface or a protective steel plate of a minimum of 10 mm thickness. The drop surface shall be sufficiently flat so that the difference in level between any two points on the surface is no more than 2 mm.

One cylinder shall be subjected to the burst test specified in 8.5.3.

The other cylinder shall be subjected to the pressure cycling test specified in 8.5.4.

The following parameters shall be monitored and recorded:

a) visual appearance after each drop – record position and dimensions of impact damage;

b) parameters specified in test 8.5.3;

c) parameters specified in test 8.5.4.

STANDARDSISO.COM : Click to view the full PDF of ISO 11119-3:2020

© ISO 2020 – All rights reserved

Dimension in metres

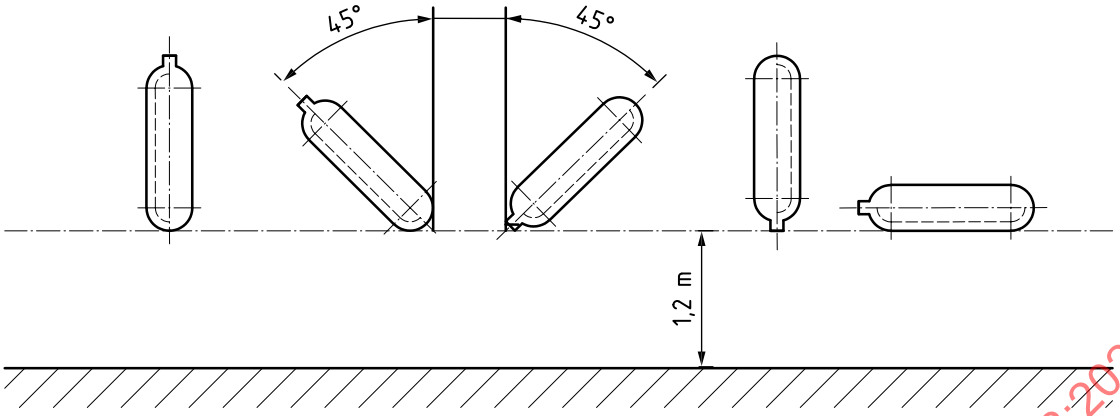

Figure 2 — Drop test

8.5.9.2.2 Criteria

First cylinder: burst pressure, p_b, shall be equal to or greater than 100 % of the minimum burst level required in the burst test (see 8.5.3).

Second cylinder: the cylinder shall satisfy the requirements of the ambient cycle test (see 8.5.4).

8.5.9.3 For cylinders over 50 l water capacity

8.5.9.3.1 Procedure

a) One or more empty cylinders, with sealing device to protect threads and sealing surfaces, shall be drop tested at ambient temperature. The surface onto which the cylinders are dropped shall be a smooth, horizontal concrete pad or flooring.

b) One cylinder shall be dropped in a horizontal position with the lowest point of the cylinder no less than 1,8 m above the surface onto which it is dropped. One cylinder shall be dropped vertically on one end at a sufficient height above the floor or pad so that the potential energy is 1 220 joules, but the height of the lower end shall in no case be greater than 1,8 m. One cylinder shall be dropped at a 45° angle onto a dome from a height such that the centre of gravity is at 1,8 m. However, if the lower end is less than 0,6 m from the ground, the drop angle shall be changed to maintain a minimum height of 0,6 m and a centre of gravity of 1,8 m. The cylinder(s) shall be allowed to bounce on the concrete pad or flooring after the initial impact. No attempt shall be made to prevent this secondary impacting, but the cylinder can be prevented from toppling during the vertical drop test.

c) After completion of the drop the cylinder(s) shall be subjected to cycle testing at 2/3 of the test pressure, p_h, for 12 000 cycles.

8.5.9.3.2 Criteria

The cylinders shall withstand 3 000 pressurization cycles to 2/3 of the test pressure, ph, without failure by burst or leakage. The test shall continue for a further 9 000 cycles, or until the cylinder fails by leakage, whichever is the sooner. In either case, the cylinder shall be deemed to have passed the test. However, if failure during this second part of the test is by burst, then the cylinder shall have failed the test.

STANDARDSISO.COM : Click to view the full PDF of ISO 11119-3:2020

© ISO 2020 – All rights reserved

8.5.9.4 For cylinders up to and including 50 l water capacity with dedicated compressed gas service

8.5.9.4.1 Procedure

Two cylinders shall be fitted with a steel or aluminium plug with diameter no greater than the neck diameter, to protect threads and sealing surfaces.

Both cylinders shall be dropped twice, in each of the five positions shown in Figure 1, from the calculated drop height on to a smooth concrete surface or a protective steel plate of a minimum of 5 mm thickness. The drop surface shall be sufficiently flat so that the difference in level between any two points on the surface is no more than 2 mm.

The drop height, h, shall be calculated as per Formula (3):

$$h = 1{,}2 + (0{,}6 * V / m) \tag{3}$$

where

V is the water volume of the cylinder in litres;

m is the weight of the empty cylinder in kilograms.

8.5.9.4.2 Criteria

The cylinders shall withstand 3 000 pressurization cycles to 2/3 of the test pressure, p_h, without failure by burst or leakage. The test shall continue for a further 9 000 cycles, or until the cylinder fails by leakage, whichever is the sooner. In either case, the cylinder shall be deemed to have passed the test. However, if failure during this second part of the test is by burst, then the cylinder shall have failed the test.

8.5.9.5 Impact test for tubes over 150 l water capacity

8.5.9.5.1 Procedure

One or more empty tubes, with sealing device to protect threads and sealing surfaces, shall be impact tested at ambient temperature.

One empty tube and if necessary a second empty tube, shall be subjected to two impacts:

a) one to strike the tube on one end;

b) one at an angle of 45° to strike the shoulder of the tube (mid arc length at the dome).

See Figure 3.

The impact can be conducted by dropping a suitable weight or by a pendulum impact.

The tube shall be secured to ensure it does not move during the impact. The impactor shall be made from a steel bar and have a diameter of between 110 and 120 mm.

Two levels of impact are permitted.

Test one — an impactor with a potential energy of 1 200 J shall strike the tube at the positions identified in Figure 3.

Test two — (if necessary) an impactor with a potential energy of 488 J shall strike the tube at the positions identified in Figure 3.

After completion of the impact the tube(s) shall be subjected to cycle testing at 2/3 of the test pressure, p_h, for 12 000 cycles.

STANDARDSISO.COM : Click to view the full PDF of ISO 11119-3:2020

© ISO 2020 – All rights reserved

8.5.9.5.2 Criteria

The tubes shall withstand 3 000 pressurisation cycles at maximum developed pressure p_{max} without failure by burst or leakage. The test shall continue for additional cycles representing its specified lifetime, or until the tube fails by leakage, whichever is the sooner. In either case the tube shall be deemed to have passed the test. However, if failure during this second part of the test is by burst, then the tube shall have failed the test.

A tube passing the test at an energy level of 1 200 J shall be identified as achieving impact resistance level 2, which shall be reported in the qualification report and on the label (see 10.2). If the tube does not pass the blunt impact test at this level, a second tube shall be tested at an energy level of 488 J. A tube passing the test at an energy level of 488 J shall be identified as achieving impact resistance level 1, which shall be reported on the qualification report and on the label (see 10.2.). A tube that does not pass at an energy level of 488 J shall not be approved.

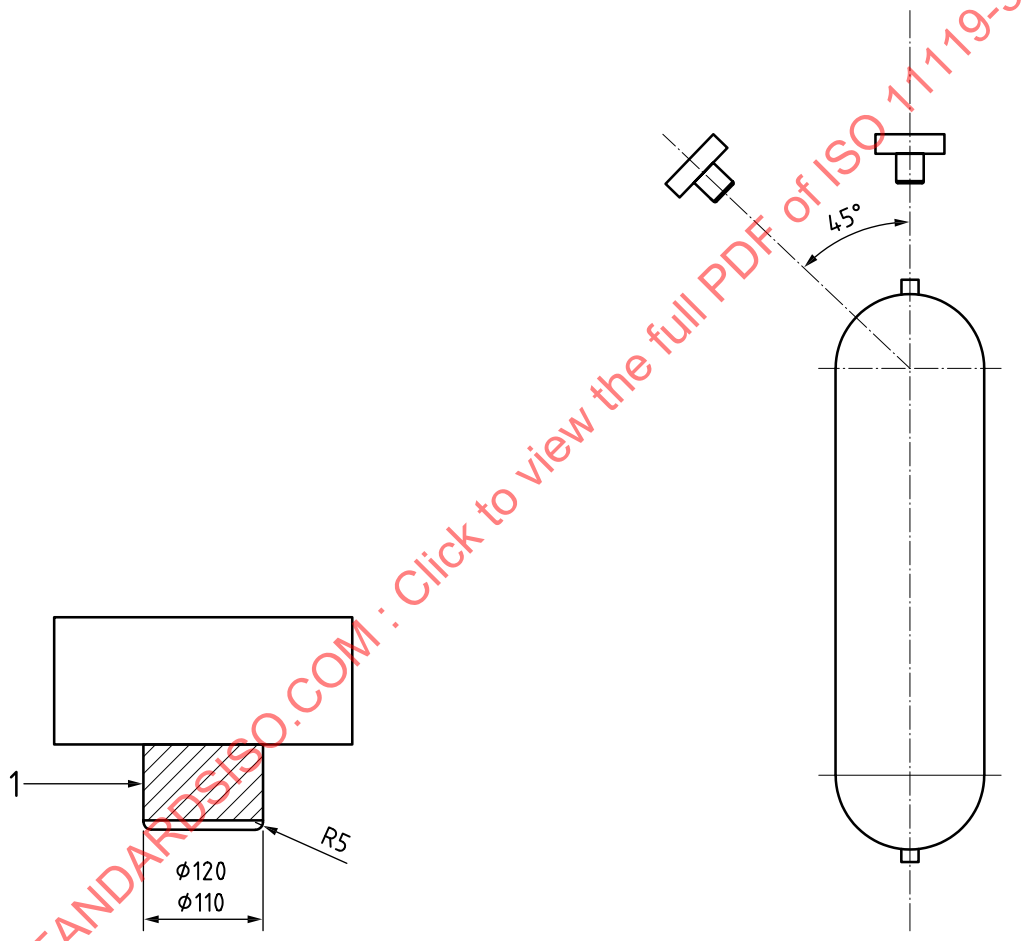

a) Example of impactor

Figure 3 — Impact test for tubes above 150l

STANDARDSISO.COM : Click to view the full PDF of ISO 11119-3:2020

8.5.10 High velocity impact (gunfire) test

8.5.10.1 Procedure

One cylinder shall be filled to 2/3 of the test pressure, p_h, with air or nitrogen or the gas to be contained.

WARNING — Appropriate measures shall be taken to ensure safe operation and to contain any energy that can be released.

© ISO 2020 – All rights reserved

The cylinder shall be positioned in such a way that the point of impact of the projectile shall be in the cylinder side wall at a nominal angle of 90°.

Cylinders with diameter of above 120 mm shall be impacted by a 7,62 mm armour-piercing projectile (of length between 37 mm and 51 mm) with a nominal speed of about 850 m/s. The bullet shall be fired from a distance no more than 45 m. The cylinder shall be safely vented before removing from the test.

Cylinders with diameter of 120 mm and below shall be impacted by a 5,6 mm armour piercing projectile (or similar) with a nominal speed of 850 m/s. The bullet shall be fired from a distance no more than 45 m.

Alternatively, a non-armour–piercing projectile may be used provided that the projectile penetrates at least one cylinder side wall.

The cylinder shall be safely vented before removing from the test.

The dimensions of the entrance and exit openings shall be measured and recorded.

After the test the cylinder shall be rendered unserviceable.

The following parameters shall be monitored and recorded:

a) type of projectile;

b) initial pressure;

c) description of failure;

d) approximate size of the entrance and exit openings.

8.5.10.2 Criteria

The cylinder shall remain in one piece. If a cylinder is not penetrated by the armour piercing projectile, then the cylinder has passed the test. If a non-armour piercing projectile is used, then the cylinder sidewall shall be penetrated, and the cylinder shall remain in one piece.

8.5.11 Fire resistance test

8.5.11.1 General

The purpose of the test is to demonstrate that the cylinder design shall either

a) not burst when exposed to a test fire when using a specified pressure relief device, or

b) will withstand a minimum specified time in the test fire when a pressure-relief device is not to be used in service.

This test is mandatory if pressure relief devices (PRDs) are fitted to prevent failure in case of fire in service and is optional for other uses. An optional fire resistance test for cylinders that will be fitted with thermal relief devices in service is shown in Annex D.

8.5.11.2 Procedure

8.5.11.2.1 General

Two cylinders shall be fitted with either:

a) the specified valves and PRDs; or

b) if a PRD is not intended to be used in service then a suitable method for pressure release after the test has been completed is required. This can include a remote-controlled valve, or a suitable valve fitted with a bursting disc or thermal relief device

STANDARDSISO.COM : Click to view the full PDF of ISO 11119-3:2020

© ISO 2020 – All rights reserved

If the test is conducted with the PRDs and valve intended for use in service [i.e. option a)], the specification of the valve and PRDs shall be marked on the design drawing and the approval certificate.

The cylinders shall be charged with air or nitrogen or the gas intended for use to the working pressure (p_h × 2/3) or for LPG applications LPG filled to the maximum permissible filling ratio.

Cylinders less than or equal to 50 l water capacity shall be subjected to one horizontal and one vertical fire test; cylinders with a water capacity greater than 50 l shall be subjected to two horizontal fire tests.

The timing of the test starts when the thermocouple temperature reaches 590 °C and at least two thermocouples must register a temperature ≥590 °C for the remainder of the test.

Any fuel may be used for the fire source provided it supplies uniform heat sufficient to maintain the specified test temperatures until the cylinder is vented. The selection of a fuel should take into consideration pollution concerns.

The cylinders shall be tested in the vertical or horizontal position as follows.

8.5.11.2.2 Horizontal test

One cylinder shall be placed in a horizontal position with the centre of the fire at the mid-point of the cylinder and with the lowest part of the cylinder approximately 0,1 m from the top of the fire source. The relief device (if fitted) shall be shielded from the direct flame impingement with a metallic shielding of between 0,4 mm and 1,0 mm thickness.

Surface temperatures shall be monitored by thermocouples located along the bottom of the cylinders and spaced not more than 0,75 m apart and shielded from direct flame impingement with a metallic shielding of a minimum 0,4 mm thickness.

A uniform fire source of 1,65 m length that is capable of enveloping the entire diameter of the cylinder and producing a temperature of 590 °C or greater shall be used.

8.5.11.2.3 Vertical test

One cylinder shall be placed in an upright position (valve uppermost for cylinders with one valve (and PRD if applicable), with the lowest part of the cylinder approximately 0,1 m from the top of the fire source. The relief device, if fitted, shall be shielded from direct flame impingement by metallic shielding of between 0,4 mm and 1,0 mm thickness.

For cylinders of 20 l water capacity or less, a fire source 1 m × 1 m shall be constructed. For cylinders having a water capacity greater than 20 l but not more than 50 l, a fire source 1,65 m × 1,65 m shall be constructed, and the cylinders oriented as described above. The fire source shall be capable of producing a temperature of 590 °C or greater.

Surface temperatures shall be monitored by thermocouples located at the following places on the cylinder: for a cylinder with a length of 30,5 cm or less, one thermocouple at the top of the cylinder and one thermocouple at the base of the cylinder, which shall be shielded from direct flame impingement with a metallic shielding of a minimum 0,4 mm thickness. For a cylinder with a length greater than 30,5 cm, an additional thermocouple shall be located at the mid-point of the cylinder's sidewall.

The cylinder shall be exposed to the fire until it has vented or burst, or the test duration reaches 30 min.

The following parameters shall be monitored and recorded:

a) type and characteristics of pressure relief device;

b) initial pressure;

c) location of leak;

d) temperature;

STANDARDSISO.COM : Click to view the full PDF of ISO 11119-3:2020

 © ISO 2020 – All rights reserved

e) time.

8.5.11.3 Criteria

a) For cylinders intended to be fitted with a specified pressure-relief device, the cylinders shall vent through the pressure-relief devices. (This test shall be repeated if another design of pressure-relief device is specified and used). Cylinders may also leak through the cylinder wall, other surfaces or devices (e.g. the valve).

b) Cylinders without a specified pressure-relief device shall not burst during

   i) a period of 2 min from the start of the fire test for cylinders up to 150 l.

   ii) a period of 5 min from the start of the fire test for cylinders 150 l and above.

   Cylinders may leak through the cylindrical surfaces, or the pressure relief device may vent before the periods identified above.

c) For cylinders with test pressure below 60 bar and intended to be used to transport liquefied flammable gases (e.g. LPG), the cylinder shall not rupture during a period of 20 min. The gas may vent through the pressure-relief devices, the cylinder wall or other devices (e.g. valve) at any stage of the test.

8.5.12 Permeability test

8.5.12.1 General

This test shall be performed for composite cylinders with non-metallic liners and for cylinders without liners.

8.5.12.2 Procedure

One finished cylinder shall be filled with either air, nitrogen, compressed natural gas or hydrogen, or for specialized applications, the gas to be contained.

The cylinder shall be pressurized to working pressure and placed in an enclosed sealed chamber at ambient temperature, and monitored for leakage for up to 500 h, to establish a steady state permeation rate.

The permeation shall be monitored by any suitable measurement techniques including gas chromatography, mass spectrometry, and weight loss.

8.5.12.3 Criteria

The permeation rate of the stored gas shall be determined. The maximum rate of permeation shall be less than X ml/h/l water capacity, where X is as follows:

a) where the test was conducted with air or nitrogen or compressed natural gas, the permeability rate shall be $X = 0{,}25$;

b) where the test was conducted with hydrogen, the permeability rate shall be $X = 2{,}00$;

c) for specialized applications, the value of X shall be chosen according to the application.

STANDARDSISO.COM : Click to view the full PDF of ISO 11119-3:2020

© ISO 2020 – All rights reserved

8.5.13 Torque test on cylinder neck boss

8.5.13.1 Procedure

The body of the cylinder shall be held in such a manner as to prevent it rotating except where the manufacturer specifies that the cylinder is to be held by the neck for valve insertion. In this case, the manufacturer's directions shall be used.

The cylinder shall be fitted with a suitable valve or threaded plug and tightened to 110 % of the maximum torque recommended in ISO 13341 for the relevant boss material or as recommended by the manufacturer where this International Standard does not apply.

The valve shall be removed after the first installation and the neck thread and boss inspected. The valve shall then be re-installed as specified above.

The cylinder shall be held at 2/3 test pressure for not less than 2 h and then the leak test in 8.5.15 shall be conducted.

The following parameters shall be monitored and recorded:

a) type of valve/plug material;

b) valving procedure;

c) applied torque.

8.5.13.2 Criteria

The neck thread and boss shall remain within drawing and gauge tolerance. Leakage greater than that specified in 8.5.15 shall constitute a failure of the test.

8.5.14 Salt water immersion test

8.5.14.1 General

This test is mandatory for all cylinders intended for underwater applications and is not required for other applications.

8.5.14.2 Procedure

The cylinders shall be unpainted but otherwise finished as for the intended application. The liner can be painted or protected from corrosion in any manner that is included in the design submission.

a) Immersion period

   Two closed unpressurized cylinders shall be immersed for a period of between 1 h and 2 h in an aqueous solution containing 35 g/l of sodium chloride at a temperature of not less than 20 °C.

   After 2 h the hydraulic pressure of the cylinder shall be increased to and maintained at 2/3 of the test pressure for not less than 22 h.

b) Drying period

   The pressurized cylinders shall then be taken out from salt water immersion and subjected to natural drying conditions in ambient atmosphere for not less than 22 h.

During this drying-out period, the cylinders shall be pressurized. The hydraulic pressure of the cylinder shall be increased to and maintained at 0,67 × p_h for not less than 2 h. Pressure shall then be released.

Repeat the cycle consisting of these two periods a) and b) 45 times.

STANDARDSISO.COM : Click to view the full PDF of ISO 11119-3:2020

 © ISO 2020 – All rights reserved

On completion of these 45 cycles:

a) one of the two cylinders shall be submitted to the burst test in accordance with 8.5.3;

b) the other cylinder shall be submitted to pressure cycling in accordance with 8.5.4.

The following parameters shall be monitored and recorded:

a) temperature of the solution, at least once a day;

b) filling pressure;

c) duration of immersion;

d) parameters specified in test 8.5.3;

e) parameters specified in test 8.5.4.

8.5.14.3 Criteria

The burst pressure, p_b, shall be not less than the burst pressure in 8.5.4 for the relevant fibre. The second cylinder shall satisfy the criteria for the ambient cycle test, 8.5.4.

8.5.15 Leak test

8.5.15.1 Procedure

Leak testing shall be performed at a minimum of the test pressure, p_h, × 2/3.

Acceptable methods for leak testing include, but are not limited to, bubble testing using dry air or gas or measurement of trace gases using a mass spectrometer.

8.5.15.2 Criteria

Leakage greater than 10^{-3} mbar/litre/sec, i.e. approximately 1 visible bubble in 2 min or 6 cc/h in the bubble leak test, shall constitute a failure of the test.

8.5.16 Pneumatic cycle test

8.5.16.1 General

Special consideration shall be given to safety when conducting this test.

One cylinder shall be used for each pneumatic cycle test. Prior to conducting this test, the cylinder shall be preconditioned by having successfully passed the test requirements of 8.5.15 and 8.5.1.

Cylinders that are intended to contain air in service shall use air for this test. Cylinders that are intended to contain hydrogen in service shall use hydrogen for this test. If the cylinders are intended for general gas service, then air or nitrogen or hydrogen may be used. If the cylinder is not tested with air or hydrogen, then it is not approved to contain air or hydrogen as applicable.

8.5.16.2 Procedure

One cylinder shall be tested as follows

a) The cylinder shall be charged to 7 bar over a two-minute period with air, nitrogen or hydrogen.

b) Continue to fill the cylinder with the same gas to test pressure, p_h, × 2/3 at no more than 40 bar/min.

c) Hold the cylinder at pressure in ambient conditions for 20 h.

STANDARDSISO.COM : Click to view the full PDF of ISO 11119-3:2020

© ISO 2020 – All rights reserved

d) After 20 h open the cylinder valve and vent the cylinder until empty

e) Allow 4 h for cylinder to stabilize at room temperature.

f) Repeat the steps a) through e) until 30 cycles have been completed

After 10 cycles, 20 cycles and 30 cycles, the valve shall be removed and the condition of the liner and liner/end boss interface shall then be visually inspected for evidence of any deterioration, such as blistering, cracking or electrostatic discharge. If there is visible degradation of the liner (such as, but not limited to, blistering, cracking or delamination) the condition shall be recorded.

If the degradation of the liner increases after the second or third inspection, then the condition shall be recorded. If degradation of the liner is present after the third inspection the cylinder shall be tested with the leak test in accordance with 8.5.15. If this cylinder passes the leak test, then it shall be subjected to the permeability test in accordance with 8.5.12.

The following parameters shall be monitored and recorded:

a) test gas used;

b) visual appearance of the liner after 10, 20 and 30 pneumatic cycles;

c) Results of the leak test if applicable;

d) Results of the permeability test, if applicable.

8.5.16.3 Criteria

The cylinder has successfully passed the leak test (8.5.15) and completed 30 pneumatic cycles as provided in 8.5.16.2 with no visible evidence of deterioration, such as cracking, blistering or evidence of electrostatic discharge.

A cylinder that has completed 30 pneumatic cycles and shows visible evidence of progressive deterioration, shall be subjected to the leak test (8.5.15) and the permeability test (8.5.12). If the cylinder successfully completed the leak test and permeability test, then it shall meet the requirements of 8.5.16.

8.5.17 Liner burst test

8.5.17.1 General

This test shall be performed on non-loading sharing metallic liners only.

8.5.17.2 Procedure

The burst pressure, p_b, or pressure at failure shall meet the applicable requirement specified in 8.5.3.2.

One liner shall be tested hydraulically to destruction by pressurizing at a rate no more than 5 bar/s. The test shall be carried out under ambient conditions.

The parameters that shall be monitored and recorded are:

a) burst pressure;

b) pressure–time curve or pressure–volume curve.

8.5.17.3 Criteria

The burst pressure of the liner, p_{bl}, shall be less than 5 % of the minimum burst pressure of the finished composite cylinder as stated in 7.2.4.

STANDARDSISO.COM : Click to view the full PDF of ISO 11119-3:2020

 © ISO 2020 – All rights reserved

8.5.18 Resin shear strength

Matrix materials shall be tested on a sample coupon representative of the composite overwrap in accordance with ISO 14130 or equivalent. This test shall be repeated when matrix materials are changed from the matrix materials in the original design. Note that interlaminar shear testing should be conducted the same conditions using identical test specimen. Following immersion for 24 h in boiling water, the composite shall have a minimum shear strength of 13,8 Mpa.

8.5.19 Glass transition temperature

The glass transition temperature of the matrix materials shall be tested in accordance with ASTM E1356 – 08 or an equivalent standard. This test shall be repeated when matrix materials are changed from the matrix materials in the original design.

The matrix materials shall meet the minimum glass transition temperature specified by the cylinder manufacturer.

8.6 Failure of type approval tests

In the event of failure to meet test requirements, an investigation into the cause of failure and re-testing shall be performed in accordance with 9.5.

9 Batch inspection and testing

9.1 Liner

9.1.1 Each batch of liners shall be examined and dimensionally checked to ensure compliance with the design specifications. The inspections to be carried out in accordance with the manufacturer's quality assurance procedures are:

a) visual inspection of external and internal surface finish;

b) dimensions;

c) minimum wall thickness;

d) water capacity;

e) weight; and

f) thread conformity.

9.1.2 Each batch of non-load-sharing metal liners and metallic bosses shall be tested to confirm that the proper materials have been used and that the required minimum properties specified in 7.2.2 have been achieved. The mechanical properties shall be tested in accordance with ISO 6892-1. Raw material manufacturer's certification (mechanical properties, chemical analysis) shall demonstrate compliance.

9.1.3 One liner from every batch of non-metallic liners shall be tested to confirm that the proper materials have been used and to verify that the required mechanical minimum properties have been achieved and meet the minimum design requirements. On every test liner two tensile specimens shall be tested. The tensile strength and the elongation shall be tested in accordance with ISO 527-1 and ISO 527-2. Acceptance of non-metallic liners shall be made taking into account the following verifications:

a) the properties of the material (raw material as granulate, etc.) shall be within the tolerances set by the material manufacturer for melt flow rate and glass transition temperature;

b) the process parameters during liner manufacturing shall be within the tolerances agreed during type approval of the process;

STANDARDSISO.COM : Click to view the full PDF of ISO 11119-3:2020

c) the material properties of the liner shall be within the tolerances required by the design requirements laid down in 7.2.2.

The raw material manufacturer's certification (mechanical properties, melt flow index, density, glass transition temperature) shall demonstrate compliance.

9.1.4 Metallic liners shall be checked for homogeneity by means of a non-destructive test, specified by the manufacturer, to ensure that the material(s) have been processed correctly.

After heat treatment 5 % of the metallic liners shall be checked for hardness in accordance with either ISO 6506-1 or ISO 6508-1 and shall achieve the limits specified in 7.2.2.

9.1.5 A record of the tests carried out shall be kept by the cylinder manufacturer.

NOTE Suitable forms of test certificates are shown in Annex B.

9.2 Failure of liner batch tests

9.2.1 If any of the test results is not satisfactory, and if the inspector is satisfied that this was due to an error in performing the test, a re-test shall be authorized using the same liner or if that is not possible either:

a) the test in question shall be repeated on a liner or test ring from the same batch, and if the results are satisfactory, the batch shall be accepted; or

b) the batch shall be re-heat treated (if appropriate) and re-tested in accordance with 9.1.2, 9.1.3 and 9.1.4, and if the results are satisfactory the batch shall be accepted.

9.2.2 Where heat treatment has been shown to be inadequate, liners shall be subjected to re-treatment, once only.

9.2.3 Where heat treatment furnace records show artificial ageing has been inadequate, additional time at the ageing temperature shall be given.

9.2.4 If the test results, having allowed for re-testing or re-heat treatment, are not satisfactory, liners in the batch shall be rendered unserviceable.

9.3 Overwrap materials

9.3.1 Supplier's certification of the material properties shall serve as verification of compliance. The strength of fibres shall be not less than specified in the documentation listed in 7.2.3.

9.3.2 If certification is not available each batch of filament materials shall be subjected to an impregnated strand test in accordance with ISO 3341 for glass fibre, ASTM D7269 for aramid and ISO 10618 for carbon fibre, or equivalent. The strength of fibres shall be not less than specified in the documentation listed in 7.2.3.

9.4 Composite cylinder

9.4.1 The inspector shall certify that the design, manufacture, inspections and testing have been carried out in accordance with this document. An example form of certificate is shown in Annex A.

9.4.2 Each batch of composite cylinders shall be examined and checked to ensure compliance with the design standard. The batch of finished cylinders can contain different batches of liners, fibres and

STANDARDSISO.COM : Click to view the full PDF of ISO 11119-3:2020

 © ISO 2020 – All rights reserved

matrix materials. The inspections that shall be carried out in accordance with the manufacturer's quality assurance procedures are:

a) visual inspection of external and internal surface finish;

b) dimensions;

c) markings;

d) water capacity;

e) weight;

f) cleanness; and

g) fibre tension (if applicable).

9.4.3 The internal and external surfaces of the finished cylinder shall be free from defects and residues from the manufacturing process which would adversely affect the safe working of the cylinders.

NOTE See ISO 9809-1, ISO 9809-2, ISO 9809-3 and ISO 7866 for guidance on possible defects in metallic liners.

9.4.4 Each completed cylinder shall be subjected to either a hydraulic proof test (in accordance with 8.5.1) or an hydraulic elastic expansion test (in accordance with 8.5.2) at the design test pressure specified in 7.2.4 c) as specified in the manufacturer's quality assurance procedures.

9.4.5 A pressure cycling test shall be conducted on no less than one finished cylinder per five batches (a maximum of 1 000 pieces produced sequentially). The cylinder to be tested shall be selected at random from the five batches. If the cylinder fails the test, all five batches shall not be released until the investigation carried out in accordance with 9.5 is completed.

The cylinder shall be subjected to a hydraulic pressure cycle test to test pressure, p_h, for unspecified gas service or maximum developed pressure at 65 °C, p_{max}, for dedicated gas service.

The procedure shall be in accordance with 8.5.4, except that the test can be suspended, as appropriate to the design, after 12 000 cycles to test pressure, or 24 000 cycles to maximum developed pressure, or after N or N_d cycles where:

$N = y \times 250$ cycles per year of design life,

$N_d = y \times 500$ cycles per year of design life,

y = is the number of years of design life.

Cylinders with a test pressure of 60 bar and above shall withstand, without failure by burst or leakage:

— N pressurization cycles to test pressure, p_h, (up to a maximum of 12 000 cycles); or

— N_d pressurization cycles to maximum developed pressure, p_{max}, (up to a maximum of 24 000 cycles).

Cylinders with test pressure below 60 bar shall withstand 12 000 pressurization cycles to test pressure, p_h, without failure by burst or leakage.

9.4.6 One cylinder per batch of finished cylinders shall be subjected to a burst test in accordance with 8.5.3.

The cylinder subjected to the pressure cycle test (see 9.4.5) can be used for this test.

The burst pressure, p_b, shall be in accordance with the criteria for the cylinder burst test specified in 8.5.3.

STANDARDSISO.COM : Click to view the full PDF of ISO 11119-3:2020

© ISO 2020 – All rights reserved

9.4.7 All cylinders incorporating welded or non-metallic liners or bonded bosses shall be tested for leakage in accordance with 8.5.15.

Leak testing shall be conducted on the completed cylinder and shall be performed at 2/3 of the test pressure, p_h.

9.5 Cylinder failure during type approval or batch testing

9.5.1 In the event of failure to meet test requirements either during a production run (batch test) or when design type approval tests do not give satisfactory results, an investigation into the cause of failure and re-testing shall be carried out.

9.5.2 If there is evidence of a fault in carrying out a test, or an error of measurement, a second test shall be performed on the same cylinder, if possible. If this is not possible, then a second test shall be performed on a cylinder selected at random from the batch. If the results of this test are satisfactory, the first test shall be ignored.

9.5.3 If the test has been carried out in a satisfactory manner, either:

a) the cause of failure shall be identified, and the procedure detailed in 9.5.4 or 9.5.5 shall be followed; or

b) the batch shall be rejected and made unserviceable.

9.5.4 If the cause of failure is identified, the defective cylinders can be reclaimed by an approved method or shall be rejected. All cylinders from the batch represented by the failed cylinder shall be tested and the passed and failed cylinders shall be separated into two batches. The failed test shall be repeated with the quantities required in 8.5.4 or 8.5.5 (as applicable) for both batches. For failures found during 100 % batch testing, only the repaired cylinders need to be re-tested. If one or more tests prove even partially unsatisfactory, all the cylinders of the batch(es) covered by the tests shall be rejected.

9.5.5 Alternatively, the cause of failure can be investigated and, if this is identified, the defective cylinders in the batch shall be removed from the batch and the failed test repeated with the quantities required in 8.5.3 or 8.5.4 (as applicable) for the original batch.

9.5.6 If a batch fails the second series of tests, the batch of cylinders shall be rendered unserviceable for holding gas under pressure. The manufacturer shall ensure that the cylinders do not enter service.

10 Cylinder marking

10.1 General

Each finished composite cylinder which satisfies the requirement of this part of ISO 11119 shall be permanently and legibly marked in accordance with ISO 13769 and ISO 7225 or as relevant except that the empty mass shall be the nominal mass.

NOTE Different requirements can exist in certain countries.

10.2 Additional marking

10.2.1 When applicable, the cylinder shall be permanently and legibly marked using a label which is either attached to the cylinder surface, in the resin or under a glass fibre layer. The applicable information to be included on the label is dependent upon cylinder use, but shall be selected from:

a) **"WARNING – This cylinder must be filled only with <<named gas(es)>>"** where a cylinder is to be used for dedicated gas service;

STANDARDSISO.COM : Click to view the full PDF of ISO 11119-3:2020

 © ISO 2020 – All rights reserved

b) **"WARNING – This cylinder must be used with a <<named>> pressure relief device"** where a cylinder is approved with a specific pressure relief device (see 8.5.11);

c) **"Maximum torque <<manufacturer's recommended torque>>"** where fitting torque does not correspond to the values given in ISO 13341 or where the thread is not listed in ISO 13341;

d) **"WARNING – This cylinder must be clamped by the neck for valve insertion and removal"** where the cylinder is not designed for clamping on the body.

e) **"WARNING – This cylinder must not be subjected to a vacuum"**, where a prototype representative of the cylinder design has not been subjected to the vacuum test in accordance with 8.5.5.1.

f) **"This tube has impact resistance level 1 (or 2)"**

As appropriate, for cylinders above 150l where it is approved with a specific energy for the impact test (see 8.5.9).

g) details of components that are permanently attached to the cylinder and form part of the qualified design (e.g. neck rings, protective boots etc) with instructions that they shall not be removed at periodic inspection.

h) other additional markings such as re-test dates, customer names, etc.

10.2.2 All labels shall be clearly marked with letters not less than 3 mm high.

STANDARDSISO.COM : Click to view the full PDF of ISO 11119-3:2020

Annex A
(informative)

Examples of design approval certificate

Design approval certificate — Composite gas cylinders and tubes with non-load-sharing metallic or non-metallic liners or without liners

Issued by (*Relevant authority*) on the basis of applying ISO 11119-3, *Gas cylinders - Design, construction and testing of refillable composite gas cylinders and tubes — Part 3: Fully wrapped fibre reinforced composite gas cylinders and tubes up to 450L with non-load-sharing metallic or non-metallic liners*

Approval No. Date

Cylinder description (*Family of cylinders which has received type approval*)

Manufacturer's drawing No.

Design life Underwater Special torque Pressure relief device

Liner heat treatment Details

Finished cylinder		Liner	Liner	Boss	Composite material	
Capacity	l	Material			Fibre(s)	
Test pressure	bar	Minimum thickness, mm			Fibre(s) tensile strength	MPa
Diameter	mm	Minimum yield strength, MPa			Fibre(s) modulus	GPa
Length	mm	Minimum tensile strength, MPa			Matrix components	
Thread		Elongation, %			Shear strength	MPa

Compatible gases

Manufacturer or agent (*Name and address of manufacturer or his agent*)

Type of approval mark

Details of the results of the examination of the design for design approval are detailed in type approval test report.

All information can be obtained from (*Name and address of the approving body*)

Date Place

Signature

STANDARDSISO.COM : Click to view the full PDF of ISO 11119-3:2020

© ISO 2020 – All rights reserved

Annex B
(informative)

Specimen test reports

Verification bodies report on:

The manufacture of fully wrapped fibre reinforced composite gas cylinders and tubes with non-load-sharing metallic or non-metallic liners or without liners

.....

Inspection body .....

The inspector's mark .....

Certificate No. .....

Place ..... Date .....

Cylinders manufactured by .....

Manufacturer's mark .....

Manufactured for .....

Consigned to .....

Quantity ..... Overall size (mm) ..... Outside diameter by ..... long

Serial numbers ..... to ..... inclusive

Standard

Drawing No. .....

Date of hydraulic pressure test .....

Test pressure (bar) .....

Water capacity (l) .....

Gas ..... Filling pressure (permanent) (bar) .....

Filling ratio (liquefied) (bar) .....

Mass of container (kg) Minimum ..... Maximum ..... Without valve

Minimum ..... Maximum ..... With valve

NOTE Items in parentheses below refer to the clauses of this document.

Each liner was produced by over-wrapping a seamless liner with resin-impregnated filament reinforcement.

Liner material designated as _____ was supplied by _____ and the analysis was within the required limits.

Each liner was produced by an approved process. The results of the mechanical tests have been found satisfactory (see 9.1.3).

STANDARDSISO.COM : Click to view the full PDF of ISO 11119-3:2020

Overwrap was applied by wrapping under controlled tension.

Glass Carbon Aramid

designated .....

supplied by .....

impregnated with resin designated .....

manufactured by .....

Identified by package number and cured after wrapping to the manufacturer's standard.

Filaments strand strength and reinforcement were verified and found satisfactory.

Calculated stress levels on the reinforcement filaments satisfy design requirements.

Each cylinder was subjected to a hydraulic proof pressure test (see 8.5.1) or elastic expansion test (see 8.5.2) at the test pressure stated above.

The results of the batch pressure cycle and burst tests were satisfactory.

Each cylinder has been marked as required by ISO 11119-3, (Clause 10).

WE HEREBY CERTIFY that each of the above cylinders meets, in full, the requirements of ISO 11119-3.

For and on behalf of the manufacturer

.....

For and on behalf of the inspection body

.....

STANDARDSISO.COM : Click to view the full PDF of ISO 11119-3:2020

 © ISO 2020 – All rights reserved