INTERNATIONAL STANDARD

ISO 13680

Third edition
2010-09-01

Petroleum and natural gas industries — Corrosion-resistant alloy seamless tubes for use as casing, tubing and coupling stock — Technical delivery conditions

Industries du pétrole et du gaz naturel — Tubes sans soudure en acier allié résistant à la corrosion utilisés comme tubes de cuvelage, tubes de production et tubes-ébauches pour manchons — Conditions techniques de livraison

STANDARDSISO.COM : Click to view the full PDF of ISO 13680:2010

Reference number
ISO 13680:2010(E)

© ISO 2010

PDF disclaimer

This PDF file may contain embedded typefaces. In accordance with Adobe's licensing policy, this file may be printed or viewed but shall not be edited unless the typefaces which are embedded are licensed to and installed on the computer performing the editing. In downloading this file, parties accept therein the responsibility of not infringing Adobe's licensing policy. The ISO Central Secretariat accepts no liability in this area.

Adobe is a trademark of Adobe Systems Incorporated.

Details of the software products used to create this PDF file can be found in the General Info relative to the file; the PDF-creation parameters were optimized for printing. Every care has been taken to ensure that the file is suitable for use by ISO member bodies. In the unlikely event that a problem relating to it is found, please inform the Central Secretariat at the address given below.

STANDARDSISO.COM : Click to view the full PDF of ISO 13680:2010

COPYRIGHT PROTECTED DOCUMENT

© ISO 2010

All rights reserved. Unless otherwise specified, no part of this publication may be reproduced or utilized in any form or by any means, electronic or mechanical, including photocopying and microfilm, without permission in writing from either ISO at the address below or ISO's member body in the country of the requester.

ISO copyright office
Case postale 56 • CH-1211 Geneva 20
Tel. + 41 22 749 01 11
Fax + 41 22 749 09 47
E-mail copyright@iso.org
Web www.iso.org

Published in Switzerland

Contents

Page

Foreword v

Introduction vi

1 Scope 1

2 Conformance 2
2.1 Dual normative references 2
2.2 Units of measurement 2

3 Normative references 2

4 Terms, abbreviated terms, symbols and definitions 4
4.1 Terms and definitions 4
4.2 Symbols 7
4.3 Abbreviated terms 7

5 Information to be supplied by the purchaser 8

6 Manufacturing process 9
6.1 Manufacturing of corrosion-resistant alloys 9
6.2 Product manufacturing process 9
6.3 Pipe end sizing 10
6.4 Straightening 10
6.5 Process requiring validation 10
6.6 Traceability 10

7 Material requirements 11
7.1 Chemical composition 11
7.2 Tensile properties 11
7.3 Hardness properties 11
7.4 Charpy V-notch test properties — General requirements 11
7.5 Charpy V-notch — Absorbed energy requirements for coupling stock — All grades 12
7.6 Charpy V-notch — Absorbed energy requirements for pipe — All grades 13
7.7 Flattening requirements 14
7.8 Corrosion properties 15
7.9 Microstructure properties 15
7.10 Surface condition 15
7.11 Defects 15
7.12 Hydrostatic test 16

8 Dimensions, masses and tolerances 16
8.1 Outside diameter, wall thickness and mass 16
8.2 Length 17
8.3 Tolerances 17
8.4 Product ends 17

9 Inspection and testing 17
9.1 Test equipment 17
9.2 Type and frequency of tests 18
9.3 Testing of chemical composition 18
9.4 Testing of mechanical characteristics 19
9.5 Tensile test 19
9.6 Hardness test 20
9.7 Impact or flattening test 20
9.8 Microstructural examination 23
9.9 Dimensional testing 23

STANDARDSISO.COM : Click to view the full PDF of ISO 13680:2010

© ISO 2010 – All rights reserved

9.10 Drift test 24
9.11 Length 24
9.12 Straightness 24
9.13 Mass determination 24
9.14 Hydrostatic test 25
9.15 Visual inspection 25
9.16 Non-destructive examination 26

10 Surface treatment 31
10.1 Group 1 31
10.2 Groups 2, 3 and 4 31

11 Marking 31
11.1 General 31
11.2 Marking on the product 32
11.3 Date of manufacture 33

12 Surface protection — Group 1 33

13 Documents 33
13.1 Electronic media 33
13.2 Retention of records 34
13.3 Test certificates 34

14 Handling, packaging and storage 35
14.1 General 35
14.2 Handling 35
14.3 Packaging 35
14.4 Storage 35

Annex A (normative) Tables in SI units 36

Annex B (normative) Figures in SI (USC) Units 56

Annex C (normative) Tables in USC units 61

Annex D (normative) Purchaser inspection 81

Annex E (normative) Cleanliness requirements 82

Annex F (informative) Use of the API Monogram by Licensees 84

Annex G (normative) Product specification level 2 (PSL-2) 87

Bibliography 89

STANDARDSISO.COM : Click to view the full PDF of ISO 13680:2010

© ISO 2010 – All rights reserved

Foreword

ISO (the International Organization for Standardization) is a worldwide federation of national standards bodies (ISO member bodies). The work of preparing International Standards is normally carried out through ISO technical committees. Each member body interested in a subject for which a technical committee has been established has the right to be represented on that committee. International organizations, governmental and non-governmental, in liaison with ISO, also take part in the work. ISO collaborates closely with the International Electrotechnical Commission (IEC) on all matters of electrotechnical standardization.

International Standards are drafted in accordance with the rules given in the ISO/IEC Directives, Part 2.

The main task of technical committees is to prepare International Standards. Draft International Standards adopted by the technical committees are circulated to the member bodies for voting. Publication as an International Standard requires approval by at least 75 % of the member bodies casting a vote.

Attention is drawn to the possibility that some of the elements of this document may be the subject of patent rights. ISO shall not be held responsible for identifying any or all such patent rights.

ISO 13680 was prepared by Technical Committee ISO/TC 67, *Materials, equipment and offshore structures for petroleum, petrochemical and natural gas industries*, Subcommittee SC 5, *Casing, tubing and drill pipe*.

This third edition cancels and replaces the second edition (ISO 13680:2008), of which is constitutes a minor revision, with changes to 4.1.2; 4.1.14; 4.1.16; 4.1.19; 5.2 p) and 5.2 q); 6.1; 6.5; 6.6; 7.2; 7.7; 7.11.1 and 7.11.2; 9.3.3; 9.8.2; 9.8.3; 9.16.7; 9.16.13; 9.16.14; 11.2.4; 13.3; and Tables A.1, A.27, A.28, C.2, C.15, C.18, C.27 and C.28.

It is the intent of ISO/TC 67 that the second and third edition of ISO 13680 both be applicable, at the option of the purchaser, for a period of six months from the first day of the calendar quarter immediately following the date of publication of this third edition, after which period the second edition will no longer be applicable.

STANDARDSISO.COM : Click to view the full PDF of ISO 13680:2010

© ISO 2010 – All rights reserved

Introduction

It is necessary that users of this International Standard be aware that further or differing requirements can be needed for individual applications. This International Standard is not intended to inhibit a vendor from offering, or the purchaser from accepting, alternative equipment or engineering solutions for the individual application. This can be particularly applicable where there is innovative or developing technology. Where an alternative is offered, it is the responsibility of the vendor to identify any variations from this International Standard and provide details.

This International Standard includes provisions of various nature. These are identified by the use of certain verbal forms:

SHALL is used to indicate that a provision is MANDATORY;

SHOULD is used to indicate that a provision is not mandatory, but RECOMMENDED as good practice;

MAY is used to indicate that a provision is OPTIONAL.

STANDARDSISO.COM : Click to view the full PDF of ISO 13680:2010

© ISO 2010 – All rights reserved

Petroleum and natural gas industries — Corrosion-resistant alloy seamless tubes for use as casing, tubing and coupling stock — Technical delivery conditions

WARNING — It is the purchaser's responsibility to specify the product specification level (PSL), corrosion-resistant alloy (CRA) group, category, grade, delivery conditions and any other requirements in addition to those specified herewith to ensure that the product is adequate for the intended service environment. ISO 15156 (all parts) or NACE MR0175/ISO 15156 should be considered when making specific requirements for H_2S-containing environment; see Annex G.

1 Scope

This International Standard specifies the technical delivery conditions for corrosion-resistant alloy seamless tubulars for casing, tubing and coupling stock for two product specification levels:

— PSL-1, which is the basis of this International Standard;

— PSL-2, which provides additional requirements for a product that is intended to be both corrosion resistant and cracking resistant for the environments and qualification method specified in ISO 15156-3 and Annex G of this International Standard.

At the option of the manufacturer, PSL-2 products can be provided in lieu of PSL-1.

NOTE 1 The corrosion-resistant alloys included in this International Standard are special alloys in accordance with ISO 4948-1 and ISO 4948-2.

This International Standard is applicable to the following four groups of product:

a) group 1, which is composed of stainless alloys with a martensitic or martensitic/ferritic structure;

b) group 2, which is composed of stainless alloys with a ferritic-austenitic structure, such as duplex and super-duplex stainless alloy;

c) group 3, which is composed of stainless alloys with an austenitic structure (iron base);

d) group 4, which is composed of nickel-based alloys with an austenitic structure (nickel base).

This International Standard contains no provisions relating to the connection of individual lengths of pipe.

NOTE 2 The connection or joining method can influence the corrosion performance of the materials specified in this International Standard.

NOTE 3 It is necessary to recognize that not all PSL-1 categories and grades can be made cracking resistant in accordance with ISO 15156-3 and are, therefore, not included in PSL-2.

STANDARDSISO.COM : Click to view the full PDF of ISO 13680:2010

© ISO 2010 – All rights reserved

2 Conformance

2.1 Dual normative references

In the interests of worldwide application of this International Standard, ISO/TC 67 has decided, after detailed technical analysis, that certain of the normative documents listed in Clause 3 and prepared by ISO/TC 67 or another ISO Technical Committee are interchangeable in the context of the relevant requirement with the relevant document prepared by the American Petroleum Institute (API), the American Society for Testing and Materials (ASTM) or the American National Standards Institute (ANSI). These latter documents are cited in the running text following the ISO reference and preceded by “or”, for example “ISO XXXX or API YYYY”.

Application of an alternative normative document cited in this manner can lead to technical results that differ from the use of the preceding ISO reference. However, both results are acceptable and these documents are, thus, considered interchangeable in practice.

2.2 Units of measurement

In this International Standard, data are expressed in both the International System (SI) of units and the United States Customary (USC) or other system of units. For a specific order item, it is intended that only one system of units be used, without combining data expressed in the other system.

Products manufactured to specifications expressed in either of these unit systems shall be considered equivalent and totally interchangeable. Consequently, compliance with the requirements of this International Standard as expressed in one system provides compliance with requirements expressed in the other system.

For data expressed in SI units, a comma is used as the decimal separator and a space as the thousands separator.

For data expressed in USC units, a dot (on the line) is used as the decimal separator and a space as the thousands separator.

In the text, data in SI units are followed by data in USC or other units in parentheses.

Separate tables for data expressed in SI units and USC units are given in Annex A and Annex C, respectively.

Figures are contained in Annex B and express data in both SI and USC units.

3 Normative references

The following referenced documents are indispensable for the application of this document. For dated references, only the edition cited applies. For undated references, the latest edition of the referenced document (including any amendments) applies.

ISO 377, *Steel and steel products — Location and preparation of samples and test pieces for mechanical testing*

ISO 404, *Steel and steel products — General technical delivery requirements*

ISO 525, *Bonded abrasive products — General requirements*

ISO 783, *Metallic materials — Tensile testing at elevated temperature*

ISO 4885, *Ferrous products — Heat treatments — Vocabulary*

ISO 4948-1, *Steels — Classification — Part 1: Classification of steels into unalloyed and alloy steels based on chemical composition*

STANDARDSISO.COM : Click to view the full PDF of ISO 13680:2010

 © ISO 2010 – All rights reserved

ISO 4948-2, *Steels — Classification — Part 2: Classification of unalloyed and alloy steels according to main quality classes and main property or application characteristics*

ISO 6508-1, *Metallic materials — Rockwell hardness test — Part 1: Test method (scales A, B, C, D, E, F, G, H, K, N, T)*

ISO 6892-1, *Metallic materials — Tensile testing — Part 1: Method of test at room temperature*

ISO 6929, *Steel products — Definitions and classification*

ISO 8501-1:2007, *Preparation of steel substrates before application of paints and related products — Visual assessment of surface cleanliness — Part 1: Rust grades and preparation grades of uncoated steel substrates and of steel substrates after overall removal of previous coatings*

ISO 9303, *Seamless and welded (except submerged arc-welded) steel tubes for pressure purposes — Full peripheral ultrasonic testing for the detection of longitudinal imperfections*

ISO 9304, *Seamless and welded (except submerged arc-welded) steel tubes for pressure purposes — Eddy current testing for the detection of imperfections*

ISO 9305, *Seamless steel tubes for pressure purposes — Full peripheral ultrasonic testing for the detection of transverse imperfections*

ISO 9402, *Seamless and welded (except submerged arc-welded) steel tubes for pressure purposes — Full peripheral magnetic transducer/flux leakage testing of ferromagnetic steel tubes for the detection of longitudinal imperfections*

ISO 9598, *Seamless steel tubes for pressure purposes — Full peripheral magnetic transducer/flux leakage testing of ferromagnetic steel tubes for the detection of transverse imperfections*

ISO 10124, *Seamless and welded (except submerged arc-welded) steel tubes for pressure purposes — Ultrasonic testing for the detection of laminar imperfections*

ISO 10474, *Steel and steel products — Inspection documents*

ISO 10543, *Seamless and hot-stretch-reduced welded steel tubes for pressure purposes — Full peripheral ultrasonic thickness testing*

ISO 11484, *Steel products — Employer's qualification system for non-destructive testing (NDT) personnel*

ISO 11496, *Seamless and welded steel tubes for pressure purposes — Ultrasonic testing of tube ends for the detection of laminar imperfections*

ISO 12095, *Seamless and welded steel tubes for pressure purposes — Liquid penetrant testing*

ISO 13665, *Seamless and welded steel tubes for pressure purposes — Magnetic particle inspection of the tube body for the detection of surface imperfections*

ISO 14284, *Steel and iron — Sampling and preparation of samples for the determination of chemical composition*

ISO 15156-3:2009[1)], *Petroleum and natural gas industries — Materials for use in H_2S-containing environments in oil and gas production — Part 3: Cracking-resistant CRAs (corrosion-resistant alloys) and other alloys*

STANDARDSISO.COM : Click to view the full PDF of ISO 13680:2010

1) Cancelled and replaced ISO 15156-3:2003.

© ISO 2010 – All rights reserved

ISO 80000-1, *Quantities and units — Part 1: General*

ASNT SNT-TC-1A, *Recommended Practice — Non-Destructive Testing*

ASTM A370, *Standard Test Methods and Definitions for Mechanical Testing of Steel Products*

ASTM A604/A604M, *Standard Practice for Macroetch Testing of Consumable Electrode Remelted Steel Bars and Billets*

ASTM A941, *Standard Terminology Relating to Steel, Stainless Steel, Related Alloys and Ferroalloys*

ASTM E18, *Standard Test Methods for Rockwell Hardness of Metallic Materials*

ASTM E21, *Standard Test Methods for Elevated Temperature Tension Tests of Metallic Materials*

ASTM E23, *Standard Test Methods for Notched Bar Impact Testing of Metallic Materials*

ASTM E29, *Standard Practice for Using Significant Digits in Test Data to Determine Conformance with Specifications*

ASTM E45-05e3, *Standard Test Methods for Determining the Inclusion Content of Steel*

ASTM E165, *Standard Practice for Liquid Penetrant Examination for General Industry*

ASTM E213, *Standard Practice for Ultrasonic Testing of Metal Pipe and Tubing*

ASTM E309, *Standard Practice for Eddy-Current Examination of Steel Tubular Products Using Magnetic Saturation*

ASTM E340, *Standard Test Method for Macroetching Metals and Alloys*

ASTM E381, *Standard Method of Macroetch Testing Steel Bars, Billets, Blooms, and Forgings*

ASTM E562, *Standard Test Method for Determining Volume Fraction by Systematic Manual Point Count*

ASTM E570, *Standard Practice for Flux Leakage Examination of Ferromagnetic Steel Tubular Products*

ASTM E709, *Standard Guide for Magnetic Particle Testing*

NACE MR0175/ISO 15156, *Petroleum and Natural Gas Industries — Materials for Use in H_2S-containing Environments in Oil and Gas Production*

STANDARDSISO.COM : Click to view the full PDF of ISO 13680:2010

4 Terms, abbreviated terms, symbols and definitions

4.1 Terms and definitions

For the purposes of this document, the terms and definitions given in ISO 377, ISO 404, ISO 4885, ISO 4948-1, ISO 4948-2, ISO 6929, ISO 10474, ASTM A941 and the following apply.

4.1.1
casing
pipe intended to line the walls of a drilled well

© ISO 2010 – All rights reserved

4.1.2
cast
heat
material of the same category melted in the same manufacturing process at the same time sequence poured into multiple ingots or continuous strand cast

4.1.3
cold-hardened
material condition where the mechanical properties are obtained by a cold finishing process not followed by heat treatment

NOTE 1 Cold finishing is a plastic deformation of material at a temperature below the recrystallization temperature such that permanent strain hardening occurs.

NOTE 2 The percentage of cold hardening depends on the specified strength level for each material grade, as shown in Table A.3 or Table C.3 for the cold-hardened condition.

4.1.4
corrosion-resistant alloy
CRA
alloy intended to be resistant to general and localized corrosion and/or environmental cracking in environments that are corrosive to carbon and low-alloy steels

4.1.5
coupling stock
seamless thick-wall tubular product used for the manufacture of coupling blanks

4.1.6
defect
imperfection having sufficient magnitude to warrant rejection of the product based on the criteria defined in this International Standard

4.1.7
hot-finished
HF
material condition obtained by deforming metal plastically at such a temperature and strain rate that recrystallization takes place simultaneously with the deformation, thus preventing permanent strain hardening

4.1.8
imperfection
discontinuity on the product surface or in the product wall that can be detected by visual inspection or non-destructive examination (NDE) method outlined in this International Standard

4.1.9
label 1
dimensionless designation for the size or specified outside diameter that may be used when ordering pipe

4.1.10
label 2
dimensionless designation for the linear density that may be used when ordering pipe

NOTE Linear density is sometimes designated by the deprecated term “mass per unit length”.

4.1.11
linear imperfection
imperfection including, but not limited to, seams, laps, cracks, plug scores, cuts and gouges

STANDARDSISO.COM : Click to view the full PDF of ISO 13680:2010

© ISO 2010 – All rights reserved

4.1.12
manufacturer
firm, company or corporation that operates facilities for making seamless pipes for casing, tubing or coupling stock

4.1.13
pipe
plain end casing, tubing and pup joint as group

4.1.14
product
tubular product
pipe and/or coupling stock, either individually or collectively, as applicable

4.1.15
pup joint
casing or tubing shorter than range 1

4.1.16
quench hardening
quenching
heat treatment requiring austenitization followed by cooling, under conditions such that austenite transforms into martensite

NOTE 1 Quench hardening is often followed by tempering.

NOTE 2 Adapted from ISO 4885.

4.1.17
solution annealing
heat treatment requiring heating to a suitable temperature, holding at that temperature long enough to cause one or more constituents to enter into solid solution, then cooling rapidly enough to hold such constituents in solution

4.1.18
tempering
heat treatment requiring heating, one or more times, to a specific temperature below the lower critical temperature and holding at that temperature

NOTE 1 Tempering is often preceded by quench hardening.

NOTE 2 Adapted from ISO 4885.

4.1.19
test lot
lot
unit formed by products from the same heat, with the same specified outside diameter and wall thickness, the same grade, the same manufacturing process, the same final heat-treatment conditions, the same cold hardening parameters (if applicable) and in the range length as defined in Table A.16 and Table C.16

NOTE The maximum number of products in a test lot is found in Table A.21 and Table C.21.

4.1.20
tubing
pipe placed in a well to produce or inject fluids

STANDARDSISO.COM : Click to view the full PDF of ISO 13680:2010

 © ISO 2010 – All rights reserved

4.2 Symbols

A cross-sectional area of the tensile test specimen, expressed in square millimetres (square inches), based on specified outside diameter or nominal specimen width and specified wall thickness, rounded to the nearest 10 mm^2 (0.01 in^2), or 490 mm^2 (0.75 in^2), whichever is smaller

C_v Charpy V-notch energy requirement, expressed in joules (foot pounds)

D outside diameter of the product, expressed in millimetres (inches)

d inside diameter of the product, expressed in millimetres (inches)

e minimum elongation in 50,8 mm (2.0 in) gauge length, expressed in percent

f factor (for hydrostatic test): 0,8 (0.8) for all grades and sizes

m mass

p hydrostatic test pressure, expressed in megapascals (thousand pounds per square inch)

R_m tensile strength, expressed in megapascals (thousand pounds per square inch)

$R_{p0,2}$ yield strength (0,2 % non-proportional elongation), expressed in megapascals (thousand pounds per square inch)

t wall thickness of the product, expressed in millimetres (inches)

w_x percent mass fraction of element x

$Y_{S,min}$ minimum specified yield strength, expressed in megapascals (thousand pounds per square inch)

$Y_{S,max}$ maximum specified yield strength, expressed in megapascals (thousand pounds per square inch)

4.3 Abbreviated terms

AOD argon oxygen decarburization

CH cold-hardened

EMI electromagnetic inspection

ESR electro-slag remelting

HF hot-finished

HRC Rockwell hardness C scale

L + T longitudinal plus transverse

MT magnetic-particle inspection

NA not applicable

NDE non-destructive examination

PRE pitting-resistance equivalent number

PSL product specification level

STANDARDSISO.COM : Click to view the full PDF of ISO 13680:2010

© ISO 2010 – All rights reserved

QT quenched and tempered

SA solution-annealed

UT ultrasonic testing

VAD vacuum arc degassing

VAR vacuum arc remelting

VIM vacuum induction melting

VOD vacuum oxygen decarburization

5 Information to be supplied by the purchaser

WARNING — It is the purchaser's responsibility to specify the PSL, CRA group, category, grade, delivery conditions and any other requirements in addition to those specified herewith to ensure that the product is adequate for the intended service environment. ISO 15156 (all parts) or NACE MR0175/ISO 15156 should be considered when making specific requirements for H_2S-containing environment; see Annex G.

5.1 The purchaser shall state the following minimum information, as applicable, in the enquiry and purchase agreement:

Requirement		Reference
a)	Quantity of product	—
b)	Product designation: coupling stock or plain end casing or tubing or upset product	For upset product, upset drawing and drift dimension shall be supplied by the purchaser
c)	Reference to this International Standard	—
d)	Material category/grade	Table A.2 or Table C.2 and Table A.3 or Table C.3
e)	Label 1 and label 2 or specified outside diameter and specified wall thickness	Table A.15 or Table C.15 or as specified in purchase agreement
f)	Coupling stock dimensions, expressed in millimetres (inches)	As specified in purchase agreement
g)	Length range	8.2; Table A.16 or Table C.16 or as specified in purchase agreement
h)	Length for coupling stock	As specified in purchase agreement
i)	Critical thickness for impact testing of coupling stock	7.4.2
j)	Tolerances on outside diameter, wall thickness and mass of coupling stock	8.3.1
k)	Inspection by the purchaser	Annex D

STANDARDSISO.COM : Click to view the full PDF of ISO 13680:2010

© ISO 2010 – All rights reserved

5.2 The purchaser shall also state on the purchase agreement the requirements, where applicable, concerning the following stipulations, which are at the purchaser's option; if PSL-2 is not specified, the product will be supplied according to the requirements of PSL-1:

Requirement		Reference
a)	Chemical composition	7.1
b)	Mechanical properties at elevated temperature	7.2
c)	PSL-2	Annex G
d)	Impact test temperature if lower than –10 °C (14 °F)	7.4.6
e)	Special surface condition	7.10
f)	Second outside surface NDE method for group 1 materials	9.16.9
g)	Chromium depletion	9.3.3
h)	Surface protection for group 1 materials	12
i)	Hydrostatic test	7.12 and 9.14
j)	Corrosion testing	7.8
k)	Ferrite content for material 13-1-0	7.9.1
l)	Alternate drift mandrel	8.3.4
m)	End sizing by cold expansion	6.3.2
n)	Additional marking that is consistent with 11.1	11.1
o)	Surface protection	12.2
p)	For UNS N06975, $w_{Mo+W} \geqslant 6$ % mass fraction	Table A.28 or Table C.28
q)	Additional flattening tests for groups 3 and 4 materials	7.7

STANDARDSISO.COM : Click to view the full PDF of ISO 13680:2010

6 Manufacturing process

6.1 Manufacturing of corrosion-resistant alloys

The alloys covered by this International Standard shall be made by the basic oxygen process or the electric furnace process or blast furnace (group 1 only) or the VIM process, followed by further refining operations such as AOD, VOD, VAR, ESR, and VAD.

6.2 Product manufacturing process

Product manufacturing processes, starting material and heat-treatment or cold-hardened conditions are listed in Table A.1 or Table C.1.

Group 1 pipes and group 2 solution-annealed pipes shall be full-length heat-treated after any upsetting.

The manufacturer shall apply a process control plan that precludes the occurrence of phenomenon that can create surface effects (e.g. chromium depletion below 12,0 % mass fraction for groups 2, 3 and 4) on products where heat treatment is part of the manufacturing process, which can affect the corrosion resistance.

For group 2, the product shall be in the

a) solution-annealed and liquid-quenched condition, or

b) solution-annealed and liquid-quenched and cold-hardened condition.

© ISO 2010 – All rights reserved

6.3 Pipe end sizing

6.3.1 Group 1 pipe may be end-sized such as swaging or expanding after final heat treatment for purposes of threading. When end sizing such as swaging or expanding exceeds 3 % plastic strain, group 1 pipe shall be either stress relieved at suitable temperature or full-length heat-treated in accordance with a documented procedure.

When the manufacturer has demonstrated and documented that the swaging process has not detrimentally affected the corrosion properties, by agreement between the purchaser and manufacturer, group 1 pipe may be cold swaged exceeding 3 % plastic strain without subsequent heat treatment.

If end sizing is performed before final full-length heat treatment, stress relief is not required.

6.3.2 For groups 2, 3 and 4 pipe, end sizing by cold swaging or cold expansion for purpose of threading is allowed. However, end sizing by cold expansion shall be only by agreement between purchaser and manufacturer.

NOTE 1 It is very difficult to stress relieve duplex stainless steels without causing sigma-phase formation.

NOTE 2 End sizing can detrimentally influence the corrosion performance of the materials specified in this International Standard.

6.4 Straightening

For group 1 martensitic material and for group 2 material delivered in the solution-annealed condition, the pipe shall not be subjected to either tensile or expansion cold-working, except for that which is incidental to normal straightening operations, and to no more than 3 % plastic strain, after the final heat-treatment operation.

Group 1 pipes shall be hot-rotary straightened, when necessary, after heat treatment, at 400 °C (750 °F) minimum at the end of rotary straightening, unless a higher minimum temperature is specified in the purchase agreement. If hot rotary straightening is not possible, the pipe may be cold rotary straightened, provided it is then stress-relieved at 510 °C (950 °F) or higher.

Light gag-press straightening shall be permitted, providing that the plastic strain does not exceed 3 %.

6.5 Process requiring validation

Final operations performed during product manufacturing that affect attribute compliance as required in this International Standard (except chemical composition and dimensions) shall have their processes validated.

Those processes requiring validation are

— non-destructive examination (see 9.16.8);

— final heat treatment (including final heat treatment before any cold hardening);

— cold hardening (if applicable).

6.6 Traceability

The manufacturer shall establish and follow procedures for maintaining heat, re-melt ingot and/or lot identity until all required heat, re-melt ingot and/or lot tests are performed and conformance with specification requirements has been shown.

STANDARDSISO.COM : Click to view the full PDF of ISO 13680:2010

 © ISO 2010 – All rights reserved

7 Material requirements

7.1 Chemical composition

In Table A.2 or Table C.2, generic types of alloy are listed with their nominal content of key chemical elements for PSL-1 products.

In Table A.28 or Table C.28, the chemical analysis for alloy for PSL-2 products is listed.

For PSL-1 products, the chemical composition and tolerances as agreed between purchaser and manufacturer shall be included in the purchase agreement.

For group 2 material only, products in accordance with this International Standard shall have a pitting-resistance equivalent number as stated in Table A.2 or Table C.2 for PSL-1 products or in Table A.28 or Table C.28 for PSL-2 products.

7.2 Tensile properties

Tensile properties at room temperature of pipes covered by this International Standard shall meet the requirements given in Table A.3 or Table C.3 for PSL-1 products or in Table A.27 or Table C.27 for PSL-2 products.

In addition, the requirements in a) or b) shall also be met.

a) The measured tensile strength shall be 70 MPa (10 ksi) greater than the specified minimum yield strength.

b) If the requirement in 7.2 a) is not met, then there shall be a 35 MPa (5 ksi) or greater difference between the measured tensile strength and the measured yield strength. However, as this requirement can be difficult to achieve for some alloys and grades, by agreement between the purchaser and the manufacturer, the 35 MPa (5 ksi) requirement may be reduced.

When tensile properties at elevated temperature are requested by the purchaser, the values and the verification procedures shall be agreed between purchaser and manufacturer.

7.3 Hardness properties

The hardness of products covered by this International Standard shall meet the requirements given in Table A.3 or Table C.3 for PSL-1 products or in Table A.27 or Table C.27 for PSL-2 products.

The through-wall hardness variation shall meet the requirements specified in Table A.4 or Table C.4.

No individual hardness number may be greater than 2 HRC units above the specified mean hardness number.

7.4 Charpy V-notch test properties — General requirements

7.4.1 Evaluation of test results

A test shall consist of a set of three specimens taken from one location from a single tubular product length. The average value of the three impact specimens shall equal or exceed the absorbed energy requirement specified in 7.5 and 7.6. In addition, not more than one impact specimen shall exhibit an absorbed energy below the absorbed energy requirement, and in no case shall an individual impact specimen exhibit an absorbed energy below two-thirds of the absorbed energy requirement.

For the purpose of determining conformance with these requirements, the observed result of a test shall be rounded to the nearest whole number. The impact energy value for a set of test specimens (i.e. average of three tests) shall be expressed as a whole number, rounded if necessary. Rounding shall be in accordance with the rounding method of ISO 80000 or ASTM E29.

STANDARDSISO.COM : Click to view the full PDF of ISO 13680:2010

© ISO 2010 – All rights reserved

7.4.2 Critical thickness

The absorbed energy requirements are based on the critical thickness. For pipe, the critical thickness is the specified wall thickness. For coupling stock, the critical thickness shall be specified on the purchase agreement.

For coupling stock, the critical thickness should not be less than the calculated thickness of the internally threaded member at the plane of the small end of the pin (when the connection is made up power-tight).

7.4.3 Specimen size, orientation and hierarchy

When the use of full-size (10 mm × 10 mm) transverse test specimens is not possible, the largest possible sub-size transverse test specimen listed in Table A.5 or Table C.5 shall be used. When it is not possible to test using any of these transverse test specimens, the largest possible longitudinal test specimen listed in Table A.6 or Table C.6 shall be used for a group 1 product and flattening test specimens shall be used for a group 2, 3 or 4 product. The hierarchy of C_v test specimens orientation and size is specified in Table A.6 or Table C.6.

Table A.7 or Table C.7 for transverse specimens and Table A.8 or Table C.8 for longitudinal specimens provide the calculated wall thickness required to machine full-size or a smaller impact specimen (see Table A.5 or Table C.5). The impact-test specimen size that shall be selected from these tables is the largest impact test specimen having a calculated wall thickness that is less than the specified wall thickness for the pipe or coupling stock tested.

7.4.4 Alternative size impact test specimens

At the manufacturer's option, impact-test specimens of an alternative size, listed in Table A.5 or Table C.5, may be used in lieu of the minimum size specified determined from Table A.7 or Table C.7 or from Table A.8 or Table C.8. However, the alternative test specimen selected shall be higher on the hierarchy Table A.6 or Table C.6 than the specified size, and the absorbed energy requirement shall be adjusted in a manner consistent with the orientation and size of the impact specimen.

7.4.5 Sub-size test specimens

The minimum Charpy V-notch absorbed energy requirement for sub-size test specimens shall be that specified for a full-size test specimen multiplied by the reduction factor in Table A.5 or Table C.5.

7.4.6 Test temperature

The test temperature shall be −10 °C (14 °F). An alternative lower test temperature may be specified on the purchase agreement or selected by the manufacturer for any grade. The tolerance on the test temperature shall be ± 3 °C (± 5 °F).

7.5 Charpy V-notch — Absorbed energy requirements for coupling stock — All grades

7.5.1 General

Coupling stock suitable for more than one type of connection may be qualified by a test to demonstrate conformance to the most stringent requirements.

STANDARDSISO.COM : Click to view the full PDF of ISO 13680:2010

© ISO 2010 – All rights reserved

7.5.2 Requirements for all grades

The minimum absorbed energy requirement, C_V, for full-size test specimens is provided in Table A.9 or Table C.9, Table A.10 or Table C.10, and Table A.11 or Table C.11. The requirements are calculated based on the expressions given in Table 1, where

— $Y_{S,max}$ is the maximum specified yield strength, expressed in megapascals (thousand pounds per square inch);

— t is the critical wall thickness (see 7.4.2), expressed in millimetres (inches).

Table 1 — Expressions for the minimum absorbed energy requirement for full-size test specimens of coupling stock

Unit system and group		Transverse requirement C_V	Longitudinal requirement C_V
1		2	3
SI units of joules	Group 1	$Y_{S,max} \times (0{,}001\,18\,t + 0{,}012\,59)$ or 40 J, whichever is greater; see Table A.9	$Y_{S,max} \times (0{,}001\,18\,t + 0{,}012\,59)$ or 40 J, whichever is greater; see Table A.10
	Groups 2, 3 and 4	$Y_{S,max} \times (0{,}001\,18\,t + 0{,}012\,59)$ or 27 J, whichever is greater; see Table A.11	NA[a]
USC units of foot-pounds	Group 1	$Y_{S,max} \times (0{,}152\,t + 0{,}064)$ or 29 ft-lb, whichever is greater; see Table C.9	$Y_{S,max} \times (0{,}152\,t + 0{,}064)$ or 29 ft-lb, whichever is greater; see Table C.10
	Groups 2, 3 and 4	$Y_{S,max} \times (0{,}152\,t + 0{,}064)$ or 20 ft-lb, whichever is greater; see Table C.11	NA[a]

[a] When transverse Charpy V-notch tests ½ size or greater are not possible for groups 2, 3 and 4, then flattening tests are required.

7.6 Charpy V-notch — Absorbed energy requirements for pipe — All grades

The minimum absorbed energy requirement, C_V, for full-size test specimens is provided in Table A.12 or Table C.12, Table A.13 or Table C.13, and Table A.14 or Table C.14. The requirements are calculated based on the expressions given in Table 2, where

— $Y_{S,min}$ is the minimum specified yield strength, expressed in megapascals (thousand pounds per square inch);

— t is the critical wall thickness (see 7.4.2), expressed in millimetres (inches).

STANDARDSISO.COM : Click to view the full PDF of ISO 13680:2010

© ISO 2010 – All rights reserved

Table 2 — Expressions for the minimum absorbed energy requirement for full-size test specimens of pipe

Unit system and group		Transverse requirement C_v	Longitudinal requirement C_v
1		2	3
SI units of joules	Group 1	$Y_{S,min} \times (0{,}001\ 18\ t + 0{,}012\ 59)$ or 40 J, whichever is greater; see Table A.12	$Y_{S,min} \times (0{,}001\ 18\ t + 0{,}012\ 59)$ or 40 J, whichever is greater; see Table A.13
	Groups 2, 3 and 4	$Y_{S,min} \times (0{,}001\ 18\ t + 0{,}012\ 59)$ or 27 J, whichever is greater; see Table A.14	NA[a]
USC units of foot-pounds	Group 1	$Y_{S,min} \times (0{,}152\ t + 0{,}064)$ or 29 ft-lb, whichever is greater; see Table C.12	$Y_{S,min} \times (0{,}152\ t + 0{,}064)$ or 29 ft-lb, whichever is greater; see Table C.13
	Groups 2, 3 and 4	$Y_{S,min} \times (0{,}152\ t + 0{,}064)$ or 20 ft-lb, whichever is greater; see Table C.14	NA[a]

[a] When transverse Charpy V-notch tests ½ size or greater are not possible for groups 2, 3 and 4, then flattening tests are required.

STANDARDSISO.COM : Click to view the full PDF of ISO 13680:2010

7.7 Flattening requirements

For groups 2, 3 or 4, flattening tests shall be made as an alternative to impact tests when the outside diameter or wall thickness precludes the machining of transverse impact test specimens ½ size or larger. By agreement between the purchaser and manufacturer for groups 3 and 4, flattening tests may be performed in addition to the impact tests that are required when ½ size or larger transverse specimens can be machined.

When flattening tests are required, products with D/t ratios between 3 and 15 shall be flattened until the distance between the plates is less than or equal to S, expressed in percent, of the specified outside diameter, D, as calculated by Equation (1) for SI units and by Equation (2) for USC units:

$$S = 100 - \{[3{,}845\ 8\ \ln(Y_{S,max}) - 24{,}344] \times D/t\} \quad (1)$$

$$S = 100 - \{[3.845\ 8\ \ln(Y_{S,max}) - 16.919] \times D/t\} \quad (2)$$

where

$Y_{S,max}$ is the maximum specified yield strength, expressed in megapascals (thousand pounds per square inch);

D is the specified outside diameter of the product, expressed in millimetres (inches);

t is the specified wall thickness of the product, expressed in millimetres (inches);

ln is the natural logarithm of the maximum specified yield strength.

When the D/t ratio is outside the above limits, the required flattening shall be by agreement between the purchaser and manufacturer.

Each ring shall be flattened to the maximum distance between the plates specified above.

© ISO 2010 – All rights reserved

Occurrence of a load drop-off, before meeting the specified deflection, shall be determined from the load versus deflection test record. A load drop-off that exceeds 5 % of the instantaneous load prior to the drop-off shall be cause for rejection. When the record does not show a load drop-off above 5 %, cracks shall not be cause for rejection.

7.8 Corrosion properties

Corrosion testing for quality control purposes is not mandatory and is not normally required. At the purchaser's option, quality control corrosion testing may be specified in the purchase agreement.

7.9 Microstructure properties

7.9.1 Group 1

For martensitic material, the delta ferrite content shall not exceed 5 %.

For category 13-1-0, the ferrite content may exceed 5 % by agreement between purchaser and manufacturer.

The microstructures shall have grain boundaries with no continuous precipitates or ferrite network.

7.9.2 Group 2

The microstructure shall have a ferritic-austenitic structure.

The microstructure shall have grain boundaries with no continuous precipitates. Inter-metallic phases, nitrides and carbides shall not exceed 1,0 % in total. The sigma phase shall not exceed 0,5 %.

For duplex alloys, the ferrite volume fraction shall be in the range 40 % to 60 %.

For super-duplex alloys, the ferrite volume fraction shall be in the range 35 % to 55 %.

7.9.3 Groups 3 and 4

The microstructures shall have grain boundaries with no continuous precipitates. Inter-metallic phases, nitrides and carbides shall not exceed 1,0 % in total. The sigma phase shall not exceed 0,5 %.

7.10 Surface condition

The internal surface of pipes shall be free from scale and annealing residues. If the purchaser has special requirements for the pipe surface, this shall be stated at the time of enquiry and order. The purchaser shall in this case specify the method, frequency, roughness values and extent of testing.

7.11 Defects

7.11.1 Pipe

All pipe shall be free from the following defects:

a) any quench crack or arc burn;

b) any surface-breaking imperfection that is proven to reduce the net effective wall thickness below 87,5 % of the specified wall thickness for hot-finished products or 90 % for other products;

c) any linear imperfection on the outside or inside surface, of any orientation, with a depth greater than 5 % of the specified wall thickness or 0,3 mm (0.012 in), whichever is greater, in the radial direction;

STANDARDSISO.COM : Click to view the full PDF of ISO 13680:2010

© ISO 2010 – All rights reserved

d) any non-surface-breaking imperfection detected that, when outlined on the outside surface, has an area greater than 260 mm^2 (0.40 in^2);

e) any surface-breaking pipe-upset imperfection, of any orientation, with a depth greater than 5 % of the specified pipe body wall thickness; the minimum wall thickness in the upset run-out interval, and the maximum combined effect of coincident internal and external imperfections in all areas, shall not result in the remaining wall below the imperfections being less than 87,5 % of the specified wall thickness;

f) on the internal upset configuration on all upset products, any sharp corner or drastic change of section that can cause a 90° hook-type tool to hang up (see Figure B.3).

7.11.2 Coupling stock

All coupling stock shall be free from any quench crack or arc burn. All coupling stock shall be free from, or have clearly marked, any other outside-surface-breaking imperfection with a depth greater than 5 % of the specified wall thickness or that is proven to reduce the outside diameter or wall thickness below specified tolerances. Also, the requirement of 7.11.1 d) shall apply.

7.11.3 Process control plan

The manufacturer, based on knowledge of the production process and the requirements of Clause 9, shall apply a process control plan that ensures that the above requirements are fulfilled.

7.12 Hydrostatic test

All HF, SA, and QT pipe shall be hydrostatically tested, unless otherwise specified in the purchase agreement.

CH pipe shall be tested if agreed upon between purchaser and manufacturer.

Due to possible limitations on some testing equipment, the hydrostatic test pressure may be, upon agreement with the purchaser, limited to 69 MPa (10 ksi). In this case, the manufacturer shall have a documented design basis to establish the physical limitation of the hydrostatic test equipment. This does not preclude conducting subsequent hydrostatic tests at a fibre stress not exceeding 80 % of yield strength, as specified in 9.14.

8 Dimensions, masses and tolerances

8.1 Outside diameter, wall thickness and mass

8.1.1 The outside diameter, wall thickness and mass of the pipes for casing and tubing covered by this International Standard are given in Table A.15 or Table C.15. The masses included in Table A.15 or Table C.15 are calculated using a factor of 1. In order to determine the masses relating to the different materials, the masses in Table A.15 or Table C.15 shall be multiplied using the following multiplication factors:

— 0,989 for ferritic and martensitic steels — Group 1;

— 1 for duplex and super-duplex steels — Group 2;

— α for austenitic steels — Group 3;

— β for austenitic Ni-based alloys — Group 4.

The α and β values shall be provided by the manufacturer.

8.1.2 Dimensions other than those in Table A.15 or Table C.15 may be agreed at the time of enquiry and order.

STANDARDSISO.COM : Click to view the full PDF of ISO 13680:2010

 © ISO 2010 – All rights reserved

8.1.3 For measurement of the diameter, an accuracy of one decimal place shall be used for label 1 larger than 6 ⅝. In this International Standard, two decimal places are used for design purposes to ensure interchangeability.

8.2 Length

The pipes shall be delivered with the range lengths listed in Table A.16 or Table C.16.

8.3 Tolerances

8.3.1 Tolerance on outside diameter, wall thickness and mass

The outside diameter, wall thickness and mass of the pipe for casing and tubing shall be within the tolerance limits given in Table A.17 or Table C.17.

For coupling stock, the tolerance on outside diameter, wall thickness and mass shall be specified at the time of enquiry and agreed on in the purchaser agreement.

8.3.2 Inside diameter, d

The inside diameter, d, tolerance is governed by outside diameter and tolerance on mass.

8.3.3 Straightness

Deviation from straightness, or chord height, shall not exceed either of the following:

— 0,2 % of the total length of the pipe, measured from one end of the pipe to the other end for pipe with a diameter > 101,60 mm (4 in) (see Figure B.1);

— 3,18 mm (0.125 in) maximum drop at each end, in the transverse direction for a length of 1,52 m (5 ft) (see Figure B.2).

8.3.4 Drift requirements

Each length of pipe shall be drift-tested throughout its entire length. Standard drift sizes for casing and tubing shall be as specified in Table A.18 or Table C.18.

An alternate drift mandrel size may be specified by the purchaser. For common alternate drift sizes, see Table A.19 or Table C.19.

8.4 Product ends

Product shall be delivered with plain ends. All ends shall be free from harmful burrs and out-of-squareness shall be within 0,01 D.

9 Inspection and testing

9.1 Test equipment

The manufacturer shall determine and document the appropriate calibration frequency and reference standards in order to be able to certify that all products conform to the requirements of this International Standard.

STANDARDSISO.COM : Click to view the full PDF of ISO 13680:2010

© ISO 2010 – All rights reserved

If test or measuring equipment, whose calibration or verification is required under the provisions of this International Standard, is subjected to unusual or severe conditions that make its accuracy questionable, recalibration or reverification shall be performed before further use of the equipment.

9.2 Type and frequency of tests

The tests carried out and the test frequency are given in Table A.20 or Table C.20.

No test is required for pup joints manufactured from a length of casing or tubing, provided that it has been previously tested and conforms to requirements and there is no subsequent heat treatment.

9.3 Testing of chemical composition

9.3.1 Chemical analysis

The results of the chemical analysis made on each cast shall be provided by the manufacturer.

The report shall include the results of quantitative determination of elements as follows:

— for PSL-1, the elements listed in Table A.2 or Table C.2 plus Si, Mn, S, P and Al;

— for PSL-2, the elements specified in Table A.28 or Table C.28;

— for PSL-1 and PSL-2, any other elements used by the manufacturer to control properties.

An analysis of the finished product shall be made on

a) two samples per cast for non-remelted alloy;

b) one sample per remelted ingot for remelted alloy.

By agreement between purchaser and manufacturer, samples may be taken from the semi-finished product.

Samples shall be taken in accordance with ISO 14284.

9.3.2 Test method

Selection of a suitable method for chemical analysis shall be at the discretion of the manufacturer. Often, the method of spectrographic analysis is used.

In cases of dispute, the method used for product analysis shall be agreed, taking into account the relevant existing International Standards.

NOTE ISO/TR 9769 or ASTM A751 or ASTM E1473 or ASTM B880 provide a list of available standards specifying methods for chemical analysis, including information on their fields of application and accuracy.

9.3.3 Chromium depletion test — Groups 2, 3 and 4

When specified in the purchase agreement, one sample per test lot (4.1.19) shall be examined for surface chromium content using the EDX (energy dispersive X-ray spectrometry) or an equivalent method. The sample shall be taken on the product in its final delivery condition, but no special surface preparation shall be done before the test. The measured chromium content on the outside and inside surfaces shall not be less than 12,0 %. A higher minimum chromium content may be agreed between purchaser and manufacturer.

If a sample fails to meet the requirements, two additional samples from the same length shall be tested. If either of the additional samples fails, the manufacturer may elect either to test each of the remaining lengths in the test lot or to rework (e.g. additional pickling and/or grinding) and test the lot as a new lot.

STANDARDSISO.COM : Click to view the full PDF of ISO 13680:2010

 © ISO 2010 – All rights reserved

9.4 Testing of mechanical characteristics

9.4.1 Test lot

The number of products per test lot (4.1.19) shall comply with the requirements of Table A.21 or Table C.21.

9.4.2 Selection and preparation of samples and test pieces

Samples and test pieces shall be taken at the pipe ends and shall be in accordance with the requirements of ISO 377.

9.5 Tensile test

9.5.1 Orientation of test pieces

The test pieces shall be taken longitudinally to the pipe axis in accordance with the requirements of ISO 6892-1 or ASTM A370.

9.5.2 Test method

A tensile test shall be carried out at room temperature in accordance with ISO 6892-1 or ASTM A370.

The tensile strength, R_m, the yield strength, $R_{p0,2}$, and the percentage elongation after fracture, e, shall be determined during the tensile test.

The results of the tensile test shall comply with the requirement of 7.2 and with the values for the material category and grade specified in Table A.3 or Table C.3 for PSL-1 products or in Table A.27 or Table C.27 for PSL-2 products.

If agreed at the time of ordering, a tensile test at elevated temperature shall be carried out in accordance with ISO 783 or ASTM E21. The yield strength, $R_{p0,2}$, shall be determined during the tensile test at the temperature agreed at the time of enquiry and order. The result of the tensile test shall comply with the value agreed at the time of enquiry and order.

9.5.3 Invalidation of test

If any tensile specimen shows defective machining or develops flaws, it may be discarded and another specimen substituted.

Any test specimen that shows defective preparation or material imperfections unrelated to the intent of the test, whether observed before or after testing, may be discorded and be replaced by another specimen from the same length of product. Specimens shall not be judged defective simply because they fail to meet the required properties.

9.5.4 Retest

If a tensile test representing a lot fails to conform to the specified requirements, the manufacturer may elect to carry out retests on three additional lengths from the same lot. In the case of test lots with three or fewer lengths, each length shall be tested. If all of the retests conform to the requirements, the lot shall be accepted, excepting the failed length.

If one or more of the retest specimens fails to conform to the specified requirements, the manufacturer may elect to test each of the remaining lengths in the lot. Any length that fails shall be rejected. Specimens for retests shall be taken in the same manner as specified in 9.4.2.

Rejected lots may be re-heat-treated and tested as new lots, as applicable.

STANDARDSISO.COM : Click to view the full PDF of ISO 13680:2010

© ISO 2010 – All rights reserved

9.6 Hardness test

9.6.1 Test pieces

The test piece for the hardness test shall be a ring cut from one end of the sample pipe. The test ring shall be a minimum of 12,7 mm (½ in) long.

9.6.2 Test method

A single quadrant hardness test specimen shall be tested as illustrated in Figure B.4. Three hardness indentations shall be made at each location (outer, midwall, inner) and the hardness numbers shall be averaged to give one mean hardness number for each location.

A Rockwell hardness test shall be carried out in accordance with ISO 6508-1 or ASTM E18. Hardness tests shall be made using the Rockwell C scale. The mean Rockwell hardness numbers shall comply with the requirements of 7.3, Table A.4 or Table C.4, and with the hardness requirements for the material category and grade specified in Table A.3 or Table C.3 for PSL-1 products or in Table A.27 or Table C.27 for PSL-2 products.

The first indentation on a hardness test specimen shall be made near the centre of the test block specimen to help seat the test specimen and reduce the possibility of errors. The result of this first indentation shall be ignored and it is not necessary to record it.

9.6.3 Invalidation of tests

If any hardness specimen shows defective machining or develops flaws, it may be remachined or discarded and another specimen substituted.

Any test specimen that shows defective preparation or material imperfections unrelated to the intent of the test, whether observed before or after testing, may be discarded and be replaced by another specimen from the same length of product. Specimens shall not be judged defective simply because they fail to meet the required properties.

9.6.4 Retests

If any mean hardness number fails to conform to specified requirements but does not exceed the specified requirements by more than 2,0 HRC units, three additional indentations shall be made in the immediate area to determine a new mean hardness number.

If the new mean hardness number conforms to the requirements, the piece shall be accepted.

If the new mean hardness number fails to conform to the requirements, the piece shall be rejected.

If a length is rejected due to exceeding maximum mean hardness or exceeding the maximum hardness variation, the manufacturer may elect to carry out retests on three additional lengths from the same lot from the same end as the original test specimen. If all the retests conform to the requirements, the lot shall be accepted. If one or more of the retest specimens fails to conform to the specified requirements, the manufacturer may elect to test each of the remaining lengths in the lot or reject the lot.

Rejected lots may be re-heat-treated and tested as new lots, as applicable.

9.7 Impact or flattening test

9.7.1 Test pieces

a) Impact test pieces shall be taken in accordance with ASTM E23 and 7.4, 7.5 and 7.6 (see Figure B.5).

   For the transverse test piece, the surface of the finished machined test piece may contain the curvature of the original tubular product, provided that the requirements of Figure B.6 are met.

STANDARDSISO.COM : Click to view the full PDF of ISO 13680:2010

 © ISO 2010 – All rights reserved

For group 1 and solution-annealed group 2, impact test pieces shall not be machined from flattened material.

For groups 2, 3 and 4 materials that have been cold hardened, transverse test pieces may be machined from flattened material by agreement between the purchaser and manufacturer.

b) Flattening test specimens shall be rings or crop ends not less than 50,8 mm (2 in) long. Specimens may be deburred prior to flattening.

9.7.2 Frequency of testing

The frequency of testing is as follows.

a) Casing and tubing, group 1: Both ends of two lengths from each heat shall be tested.

b) Casing and tubing, groups 2, 3 and 4: Both ends of two lengths from each ingot or continuous cast strand shall be tested, as shall the top length of each ingot or continuous cast strand and the bottom length of each ingot or continuous cast strand.

As an alternative, at the manufacturer's option, impact or flattening tests shall be made on both ends of two lengths taken at random from each test lot, provided the manufacturer has a documented procedure for cut-back of the end of the ingot or continuous-cast strand and for demonstration of the metal cleanliness that ensures that all delivered material conforms to the requirements of Annex E. Testing for material cleanliness shall be done periodically to demonstrate that the cleanliness criteria are under control. Relevant data shall be provided on request.

c) Coupling stock: Both ends of each length of coupling stock shall be tested.

As an alternative, at the manufacturer's option, impact or flattening tests shall be made on both ends of two lengths taken at random from each test lot, provided the manufacturer can

— either demonstrate by traceability that all coupling stock in the test lot has been made from bars that are not issued from either the top or the bottom length of the ingot or continuous cast strand, or

— provide a documented procedure for the cut-back of the end of the ingot or continuous-cast strand and for demonstration of the metal cleanliness that ensures that all delivered material conforms to the requirements of Annex E. Testing for material cleanliness shall be done periodically to demonstrate that the cleanliness criteria are under control. Relevant data shall be provided on request.

9.7.3 Impact test method

Impact test on V-notched test pieces shall be carried out in accordance with ASTM A370 and ASTM E23. The evaluation of the results shall be in accordance with 7.4.1.

9.7.4 Flattening test method

9.7.4.1 Test method

Test specimens shall be flattened between parallel plates. A load versus deflection record shall be made for each flattening test. All records shall be identified with respect to the end of the pipe tested.

Rings shall be flattened until the distance between plates is as specified in 7.7.

The load measurement shall be accurate to ±1,0 % of the maximum value and the deflection measurement shall be accurate to ±1,0 % of the initial ring specified diameter. The test record shall include the required load and deflection accuracy. The crosshead speed shall not exceed 1 cm·min^{-1} (0.4 in·min^{-1}) during the test.

STANDARDSISO.COM : Click to view the full PDF of ISO 13680:2010

© ISO 2010 – All rights reserved

9.7.4.2 Acceptance/rejection criteria

Product shall meet the requirements of 7.7.

9.7.5 Impact test retest

For group 1, if either end of a length fails to meet the specified requirements, the manufacturer may elect to test three additional specimens taken from the same end of the length. The length may be cut back prior to taking retest samples. The impact energy from each of the retest specimens shall be equal to or exceed the specified minimum absorbed energy requirement or the length shall be rejected.

If the results of the retest do not meet the specified requirements of this International Standard, then a test shall be made on both ends of an additional three lengths of product from the same test lot. If all of the additional tests conform to the specified requirements, then the test lot shall be qualified except for the length that was originally rejected. If one or more of the additional lengths tested fails to conform to the specified requirements, the manufacturer may elect either to test individually the remaining lengths in the test lot or to reject the lot. Rejected lots may be re-heat-treated and tested as new lots.

For groups 2, 3 and 4, when testing the end of the strand or ingot, if either test representing a single length fails to meet the specified requirements, the manufacturer may elect to test three additional specimens taken from the same end of the length. The length may be cut back prior to taking retest samples. If any retest specimen fails to meet the specified requirements, the manufacturer may elect either to cut back and retest the length or to reject the length and test both ends of the remaining product from the ingot or continuous cast strand. For solution-annealed materials, the manufacturer may elect to re-heat-treat all lengths from the ingot or continuous-cast strand and test as a new lot.

For groups 2, 3 and 4, when the lengths tested are selected at random, if either test representing a single length fails to meet the specified requirements, the manufacturer may elect to test three additional specimens taken from the same end of the length; however, no cut-back is allowed. The impact energy from each of the retest specimens shall be equal to or exceed the specified minimum absorbed energy requirement or the length shall be rejected. The manufacturer may elect to test both ends of the remaining product from the ingot or continuous-cast strand. For solution-annealed materials, the manufacturer may elect to re-heat-treat all lengths from the ingot or continuous-cast strand and test as a new lot.

9.7.6 Flattening test retest

When testing the end of the strand or ingot, if either test specimen representing a single length fails to meet the specified requirements, the manufacturer may elect to conduct two retests of specimens from the same end of the same product. The length may be cut back prior to taking retest samples. If either retest fails to meet the specified requirements, the manufacturer may elect either to cut back and retest the length or to reject the length and test both ends of the remaining product from the ingot or continuous-cast strand.

When the length tested is selected at random, if either test specimen representing a single length fails to meet the specified requirements, the manufacturer may elect to conduct two retests of specimens from the same end of the same product; however, no cut-back is allowed. If either retest fails to meet the requirements specified, the manufacturer may elect to reject the length that failed and to test both ends of the remaining product from the ingot or continuous-cast strand. For solution-annealed materials, the manufacturer may elect to re-heat-treat all lengths from the ingot or continuous-cast strand and test as a new lot.

9.7.7 Invalidation of tests

Any test specimen that shows defective preparation or material imperfections unrelated to the intent of the test, whether observed before or after testing, may be discarded and replaced by another specimen from the same length of product. Specimens shall not be judged defective simply because they fail to meet the required properties.

STANDARDSISO.COM : Click to view the full PDF of ISO 13680:2010

 © ISO 2010 – All rights reserved

9.8 Microstructural examination

9.8.1 Test pieces

Microstructural examination shall be made on a section taken in the longitudinal direction with respect to the pipe axis.

Test specimens shall be full radial wall thickness by minimum longitudinal length of 6 mm (0.236 in).

The test pieces shall be taken after the final heat treatment and before any cold hardening.

9.8.2 Test method

The examination of alloy structure shall be carried out in accordance with ASTM E562 with a minimum of 30 fields measured. The ferrite volume fraction shall be determined by the same method, using a minimum magnification of 400 X.

9.8.3 Retest

If a microstructure test fails to conform to the specified requirements, the manufacturer may elect to retest three additional lengths randomly selected from the lot. In the case of a continuous process, these shall represent the start, the middle and the end of the heat treat cycle.

If all the retests conform to the requirements, the lot, except the failed length, shall be accepted.

If one or more of these retests fails to conform to the requirements, the lot shall be rejected. If the manufacturer can provide, to the satisfaction of the purchaser, evidence of the cause of the failed test, the manufacturer may be allowed to retest each length and qualify the non-failing lengths.

Rejected lots may be re-heat-treated and retested as new lots, as applicable.

9.9 Dimensional testing

9.9.1 General

Each product shall be inspected to verify compliance with the requirements of Clause 8.

9.9.2 Outside diameter

The dimension shall be checked across the diameter by means of a mechanical caliper or micrometer at 0° and at 90° on each end of the product or by a continuous laser system at 0° and at 90° or one direction spirally along the full length of the product.

The frequency of measurement may be reduced, provided the manufacturer applies a process control plan that has demonstrated to the satisfaction of the purchaser that the requirements of this International Standard are met.

9.9.3 Wall thickness at end of products

Wall thickness measurements shall be made with a mechanical caliper or with a properly calibrated non-destructive examination device of appropriate accuracy. In case of dispute, the measurement determined by use of the mechanical caliper shall govern. The mechanical caliper shall be fitted with contact pins having circular cross-sections of 6,35 mm (0.25 in) diameter. The end of the pin contacting the inside surface of the product shall be rounded to a maximum radius of 38,10 mm (1.50 in) for products 168,28 mm (6 ⅝ in) and larger, a maximum radius $D/4$ for products less than 168,28 mm (6 ⅝ in) and a minimum radius of 3,18 mm (0.125 in). The end of the pin contacting the outside surface of the product shall be either flat or rounded to a radius of not less than 38,10 mm (1.50 in).

STANDARDSISO.COM : Click to view the full PDF of ISO 13680:2010

© ISO 2010 – All rights reserved

9.9.4 Wall thickness of pipe body

Continuous wall thickness measurement according to ISO 10543 shall be performed. The coverage shall not be less than 25 % of the pipe-body surface covered by the automatic equipment. If the length is too short for automatic equipment, then manual wall thickness measurement shall be made.

9.10 Drift test

9.10.1 Non-upset and external upset pipe

All drift testing shall be performed with a drift mandrel containing a cylindrical portion conforming to the standard drift requirements shown in Table A.18 or Table C.18 or the alternate drift requirement shown in Table A.19 or Table C.19, as specified in the purchase agreement. The ends of the drift mandrel extending beyond the specified cylindrical portion shall be shaped to permit easy entry into the pipe. The drift mandrel shall pass freely through the pipe by use of either a manual or power-drift procedure. In case of dispute, the manual-drift procedure shall be used. A pipe shall not be rejected until it has been drift-tested with the bore free from all foreign matter and the pipe properly supported to prevent sagging.

9.10.2 Internal upset pipe

For internally upset end tubing and casing, the pipe shall be full-length drift-tested either before or after upsetting at the manufacturer's option, using the drift mandrel dimensions given in Table A.18 or Table C.18 for standard drift mandrels or Table A.19 or Table C.19 for alternative drift mandrel dimensions or a drift mandrel having dimensions agreed at the time of enquiry and order. End drifting after upsetting is not required.

9.10.3 Drift mandrel coating

The drift mandrel shall be externally coated or manufactured from suitable non-ferrous material or in the same material as the pipe in order to avoid iron contamination. The mandrel's surface shall be free from extraneous ferrous material.

9.11 Length

The length of each finished product shall be measured using either a manual or an automatic device.

9.12 Straightness

All pipes shall be visually examined.

The straightness of excessively bent pipes or hooked extremities shall be verified

— using a straightedge or taut string (wire) from one end of the pipe to the other end (see Figure B.1),

— using a minimum 1,83 m (6 ft) straightedge shouldered on the pipe surface beyond the extent of the hooked extremity (see 8.3.3 and Figure B.2).

9.13 Mass determination

Each pipe for casing or tubing shall be weighed separately or in convenient quantities. The linear density shall be calculated to determine conformance to the requirements in Table A.17 or Table C.17.

STANDARDSISO.COM : Click to view the full PDF of ISO 13680:2010

 © ISO 2010 – All rights reserved

9.14 Hydrostatic test

The standard hydrostatic test pressure, p, expressed in megapascals (pounds per square inch), shall be calculated using Equation (3), rounded to the nearest 0,5 MPa (100 psi). Subject to the conditions in 7.12, the test pressure may be limited to 69,0 MPa (10 000 psi).

$$p = \left(2 \times f \times Y_{\mathrm{S,min}} \times t\right) / D \tag{3}$$

where

f is a factor equal to 0,8 (0.8) for all grades and sizes;

$Y_{\mathrm{S,min}}$ is the minimum specified yield strength for the pipe body, expressed in megapascals (thousand pounds per square inch);

t is the specified wall thickness, expressed in millimetres (inches);

D is the specified outside diameter, expressed in millimetres (inches).

The test conditions shall be held for not less than 5 s at full pressure.

The tester shall be equipped with devices for ensuring that the specified test pressure and time interval requirements are met. The test pressure-measuring device shall be calibrated by means of a deadweight tester, or equivalent, within four months prior to each use. Calibration and verification records retention shall be as given in 13.2.

9.15 Visual inspection

9.15.1 General

All products shall be submitted to a visual inspection in order to ensure compliance with the requirements of 7.11 and 8.4. The visual inspection of the products shall be carried out in accordance with an established written procedure.

All visual inspection shall be carried out by trained personnel with satisfactory visual acuity to detect surface imperfections. Documented lighting standards for visual inspection shall be established by the manufacturer. The minimum illumination level at the inspection surface shall be 500 lx (50 foot-candles).

The visual inspection shall be on the product in the final surface and mechanical processing condition, but before coating, if applicable.

9.15.2 Pipe body and coupling stock

Each length of pipe or coupling stock shall be visually inspected over the entire outside surface for the detection of imperfections.

9.15.3 Pipe ends

For non-upset products, pipe ends shall be visually inspected on the inside surface for a minimum distance of 2,5 D or 450 mm (18 in), whichever is the lesser.

For upset products, pipe ends shall be visually inspected on the inside surface for a minimum distance of the length of upset, including the run-out interval.

If another method is applied with documented capability of detecting defects as defined in 7.11, visual inspection is not required.

STANDARDSISO.COM : Click to view the full PDF of ISO 13680:2010

© ISO 2010 – All rights reserved

If end cropping is performed to remove defects, the end of the pipe revealed after cropping shall be subjected to a repeat internal surface inspection as previously performed.

9.15.4 Disposition

Surface imperfections disclosed by visual inspection shall be treated in accordance with 9.16.12 to 9.16.14.

9.16 Non-destructive examination

9.16.1 General

The NDE requirements and inspection levels for pipe and for coupling stock are specified in 9.16.2 to 9.16.14. A summary of the required NDE operations for pipe and coupling stock is given in Table A.20 or Table C.20. All pipe and coupling stock that require NDE (except visual inspection) shall be inspected full length (end-to-end) for defects.

The NDE standards for the inspection of pipe referenced in 9.16 are based on traditional, proven NDE methods and techniques practiced and adopted worldwide for the inspection of tubular products. However, other NDE methods/techniques that have demonstrated capability in detecting defects as defined in 7.11 may be used. Records in accordance with 9.16.8 shall be maintained.

At the discretion of the manufacturer, the artificial reference indicators in Table A.22 or Table C.22 may be oriented at an angle such that detection of defects typical of the manufacturing process is optimized. The technical justification for modification of the orientation shall be documented.

If the provisions for purchaser inspection of pipe and/or witnessing of NDE operations are stated on the purchase agreement, they shall be in accordance with Annex D.

The inspections performed in accordance with 9.16, with the equipment calibrated to the artificial reference indicators in Table A.22 or Table C.22, should not be construed as assuring that the material requirements in 7.11 have been met.

9.16.2 NDE personnel

All NDE operations (except visual inspection) to which reference is made in this International Standard shall be conducted by NDE personnel qualified in accordance with ISO 11484 or ASNT SNT-TC-1A, under the responsibility of level 3 certified personnel according to ASNT SNT-TC-1A or equivalent.

9.16.3 Products

Unless otherwise agreed, all required NDE operations shall be carried out after final heat treatment or, for CH products, after final cold hardening, and straightening operations, with the following exceptions:

a) as described in 9.16.4 for pup joints;

b) for group 1, when more than one NDE method is applied, one of these (other than ultrasonic inspection) may take place prior to heat treatment/rotary straightening.

9.16.4 Pup joints

For pup joints made from full-length casing and tubing, the required inspection for inside and outside defects shall take place either before or after cutting into final length, provided there is no subsequent upsetting or heat treatment.

STANDARDSISO.COM : Click to view the full PDF of ISO 13680:2010

 © ISO 2010 – All rights reserved

9.16.5 Untested ends

In many of the automatic NDE operations specified in this International Standard, there can be a short length at both ends which cannot be tested. In such cases, the untested ends shall be

a) cropped off, or

b) subjected to a manual/semi-automatic test achieving, as a minimum, the same degree of inspection as the automatic NDE (ISO 11496), or

c) for group 1, subjected to magnetic particle inspection of the outside and inside surfaces around the full periphery and over the length of the untested ends, or

d) for groups 2, 3 and 4, subjected to liquid-penetrant inspection of the outside and inside surfaces around the full periphery and over the length of the untested ends.

9.16.6 Upset ends

Forged upsets (including the upset run-out length) on all grades shall be subjected, after all heat-treatment operations, to NDE as outlined in this International Standard for the detection of transverse and longitudinal imperfections on the outside and inside surfaces of the upset, using the acceptance criteria given in 7.11.

9.16.7 Reference standards

Ultrasonic and electromagnetic inspection systems for other than laminar imperfection and wall-thickness verification shall use reference standards containing notches or holes as shown in Table A.22 or Table C.22 to verify equipment response from artificial reference indicators.

The reference standard for laminar imperfections shall contain a flat-bottom recess machined into the inner surface with an area not greater than 260 mm^2 (0.4 in^2). The shape of the artificial reference indicator shall be determined at the discretion of the manufacturer as that which provides detection of defects typical to the manufacturer's process.

The manufacturer may use any documented procedures to establish the reject threshold for ultrasonic or electromagnetic inspection, provided that the artificial reference indicators described in Table A.22 or Table C.22 can be detected dynamically under normal operating conditions. Such detection capability shall be demonstrated dynamically. At the option of the manufacturer, this may be performed either on-line or off-line.

Table A.23 or Table C.23 and Table A.22 or Table C.22 list the acceptance (inspection) levels and associated artificial reference indicators that manufacturers shall use in establishing reject thresholds for inspecting pipe that can contain the defects, except laminar imperfections, as defined in 7.11. The reference indicators used during automated ultrasonic or electromagnetic inspection shall not be construed as being the defect sizes defined in 7.11, or be used by those other than the manufacturer as the only basis for pipe rejection.

When calibrating eddy-current or flux-leakage testing equipment using drilled holes, the inspection system shall be capable of producing signals from both OD and ID notches that are equal to or greater than the reject threshold established using the drilled hole. Records in accordance with 9.16.8 shall be maintained.

9.16.8 NDE system capability records

The manufacturer shall maintain NDE system records verifying the system(s) capabilities in detecting the reference indicators used to establish the equipment test sensitivity.

The verification shall cover, as a minimum, the following criteria:

a) coverage calculation (i.e. scan plan), including wall thickness verification;

b) capability for the intended wall thickness;

STANDARDSISO.COM : Click to view the full PDF of ISO 13680:2010

© ISO 2010 – All rights reserved

c) repeatability;

d) transducer orientation that provides detection of defects typical of the manufacturing process (see 9.16.1);

e) documentation demonstrating that defects typical of the manufacturing process are detected using the NDE methods in Table A.23 or Table C.23;

f) threshold-setting parameters.

In addition, the manufacturer shall maintain documentation relating to

— NDE system operating procedures;

— NDE equipment description;

— NDE personnel qualification information;

— dynamic test data demonstrating the NDE system/operation capabilities under production test conditions.

9.16.9 All product group 1

All product shall be inspected for the detection of

— longitudinal and transverse imperfections on the outside and inside surfaces to acceptance level L2 by ultrasonic testing in accordance with ISO 9303 or ASTM E213 (longitudinal) and ISO 9305 or ASTM E213 (transverse), and

— laminar imperfections with an area not greater than 260 mm^2 (0.4 in^2) when outlined on the outside surface by ultrasonic testing in accordance with ISO 10124.

The signal-to-noise ratio shall not be less than 3 to 1, unless agreed in advance between the purchaser and the manufacturer.

NOTE A higher minimum value is desirable and can be specified by the purchaser.

In addition, when specified in the purchaser agreement, all product shall be inspected for the detection of imperfections on the outside surface by one of the following methods:

a) flux leakage testing to acceptance level L2 in accordance with ISO 9402 or ASTM E570 (longitudinal) and ISO 9598 or ASTM E570 (transverse); or

b) eddy-current testing to acceptance level L2 in accordance with ISO 9304 or ASTM E309; or

c) magnetic-particle inspection in accordance with ISO 13665 or ASTM E709.

9.16.10 Full-body NDE of product — Groups 2, 3 and 4

All product shall be inspected for the detection of

a) longitudinal and transverse imperfections on the outside and inside surfaces to acceptance level L2 by ultrasonic testing in accordance with ISO 9303 or ASTM E213 (longitudinal) and ISO 9305 or ASTM E213 (transverse), and

b) laminar imperfections with an area not greater than 260 mm^2 (0.4 in^2) when outlined on the outside surface by ultrasonic testing in accordance with ISO 10124.

STANDARDSISO.COM : Click to view the full PDF of ISO 13680:2010

 © ISO 2010 – All rights reserved

The signal-to-noise ratio shall not be less than 3 to 1, unless agreed in advance between the purchaser and the manufacturer.

NOTE A higher signal-to-noise ratio is normally desirable and can be specified by the purchaser; however, for alloys, such as UNS N10276, a lower signal-to-noise ratio can be necessary.

9.16.11 Pipe and coupling stock requiring further evaluation

In all cases, indications producing a threshold alarm condition as a result of the specified NDE operation(s) shall have the indications evaluated in accordance with 9.16.12, unless it can be demonstrated that the imperfection causing the indication is not a defect as described in 7.11.

9.16.12 Evaluation of indications (prove-up)

For an indication that is greater than or equal to the reject threshold, the manufacturer shall either evaluate it in accordance with this subclause or dispose of the indication as a defect in accordance with 9.16.13 or 9.16.14, as applicable. Evaluation of indications shall be performed by NDE level 1 qualified inspectors under the supervision of NDE level 2 qualified or level 3 certified inspectors, or by NDE level 2 qualified or level 3 certified inspectors. Evaluation of indications shall be performed in accordance with documented procedures.

When no imperfection is found in the area of the original indication and there is no explanation for the indication, then the product shall be rejected or, at the manufacturer's option, reinspected full-length either using the same inspection method or using ultrasonic inspection methods. At the manufacturer's option, the inspection equipment shall be adjusted either to the same sensitivity level as that used to perform the original inspection or to a reduced sensitivity that meets the specified requirements.

For the evaluation of an indicated imperfection, the depth shall be measured by one of the following methods.

a) Using a mechanical measuring device (for example, pit gauge, callipers, etc.). Removal of material by grinding or other means to facilitate measurement shall not, for pipe, reduce the remaining wall thickness below the requirement specified in 7.11.1 b) or, for coupling stock, reduce the remaining outside diameter or wall thickness below the minimum specified on the purchase agreement. Abrupt changes in wall thickness caused by material removal during prove-up shall be smoothed.

b) Using (an) ultrasonic technique(s) (time- and/or amplitude-based), or other comparable techniques. Verification of the ultrasonic technique(s) shall be documented, and shall show capability to differentiate imperfection sizes larger and smaller than the appropriate defect size stated in 7.11.

If the purchaser and manufacturer do not agree on the evaluation test results, either party may require destructive evaluation of the material, after which, disposition shall be as described in Annex D.

Imperfections that have been evaluated and found to be defects shall be given a disposition in accordance with 9.16.13 and 9.16.14, as applicable.

9.16.13 Disposition of pipe containing defects

Imperfections that satisfy the material requirements and are less than the defect size stated in 7.11 are allowed to remain in the pipe.

Repair by welding is not permitted.

Pipe containing defects shall be treated in one of the following ways:

a) grinding or machining:

Grinding or machining of quench cracks or arc burns is not permitted.

Other defects shall be completely removed by grinding or machining, provided the remaining wall thickness is within the limits specified in Table A.17 or Table C.17. Generous radii shall be made to

STANDARDSISO.COM : Click to view the full PDF of ISO 13680:2010

© ISO 2010 – All rights reserved

prevent abrupt changes in wall thickness. The surface roughness after all local grinding or machining shall be equal or smoother than that obtainable with a number 36 abrasive disk according to ISO 525. The remaining wall thickness shall be verified in accordance with 9.9.3 and shall be within the specified limits. The manufacturer's documented prove-up procedures shall address the possibility that there can be coincident defects in the affected area. After removal of the defect, the affected area shall be reinspected by

1) the same inspection unit at the same sensitivity that performed the initial inspection, or

2) liquid-penetrant inspection according to ISO 12095 or ASTM E165 or for group 1, magnetic-particle inspection according to ISO 13665 or ASTM E709, or

3) another NDE method, or combination of methods, that demonstrates equal or greater sensitivity than the original NDE.

When method 3) is used, the NDE method (or combination of methods) shall be documented and shall demonstrate equal or greater sensitivity than the original NDE. In addition, method 3) shall address the possibility that there can be other coincident defects in the affected area.

b) cut off:

The part of pipe containing the defect shall be cut off within the limits of requirements on length of the product.

c) rejection:

The pipe shall be rejected. All pipes containing quench cracks shall be rejected.

9.16.14 Disposition of coupling stock containing defects

Imperfections that satisfy the material requirements and are less than the defect size stated in 7.11 are allowed to remain in the coupling stock. Repair welding is not permitted. Coupling stock containing defects shall be given one of the following dispositions:

a) grinding or machining:

Grinding or machining of quench cracks or arc burns is not permitted.

Other defects shall be completely removed by grinding or machining, provided the remaining outside diameter is within specified limits. Grinding or machining shall be carried out in such a way that the dressed area blends smoothly into the contour of the coupling stock. After removal of the defect, the outside diameter shall be measured in the dressed area for conformance to specification limits. The affected area shall also be reinspected by

1) the same inspection unit at the same sensitivity that performed the initial inspection, or

2) liquid-penetrant inspection according to ISO 12095 or ASTM E165 or for group 1, magnetic particle inspection according to ISO 13665 or ASTM E709, or

3) another NDE method, or combination of methods, that demonstrates sensitivity equal to or greater than the original NDE.

When method 3) is used, the NDE method (or combination of methods) shall be documented and shall demonstrate sensitivity equal to or greater than the original NDE. In addition, method 3) shall address the possibility that there can be other coincident defects in the affected area.

STANDARDSISO.COM : Click to view the full PDF of ISO 13680:2010

 © ISO 2010 – All rights reserved

b) marking the area of defect:

If a defect is not removed from coupling stock within acceptable limits, then the area shall be marked to indicate the presence of a defect. The marking shall consist of a paint band encircling the coupling stock that covers the entire defect area if this area is equal to or less than 50 mm (2 in) in axial length, or bands in a cross-hatched pattern if this area is greater than 50 mm (2 in) in length. The band colour shall be as agreed between the purchaser and manufacturer.

c) cut off:

The section of coupling stock containing the defect shall be cut off within the limits of requirements on length of the product.

d) rejection:

The coupling stock shall be rejected. All coupling stock containing quench cracks shall be rejected.

10 Surface treatment

10.1 Group 1

All pipes shall be delivered with their internal surface pickled or grit blasted. Grit blasting shall be carried out using stainless steel or aluminium oxide grit.

The grit blasting level shall be in accordance with ISO 8501-1:2007, Sa 2 ½.

10.2 Groups 2, 3 and 4

All pipes shall be delivered with clean external and internal surfaces.

Cleaning should include, but should not be restricted to, the following sequence:

— degreasing (for cold-hardened product);

— washing in water;

— pickling;

— final washing in clean water with chloride ion concentration of less than 200 mg/l.

NOTE At low concentrations, “mg/l” is approximately equivalent to the deprecated term “ppm”.

At the end of the cycle, the pipe shall be completely dry.

11 Marking

11.1 General

Products manufactured in conformance with this International Standard shall be marked by the manufacturer as specified in Clause 11.

Marking shall consist of colour coding and paint stencilling. Die stamping shall be applied only if specified on the purchase agreement.

STANDARDSISO.COM : Click to view the full PDF of ISO 13680:2010

© ISO 2010 – All rights reserved

The location, sequence and size of the markings shall be as specified in 11.2 and 11.3. Additional markings are permitted by agreement at the time of enquiry and order. Markings shall not overlap and shall be applied in such a manner as not to damage the product surface.

11.2 Marking on the product

11.2.1 Marking location and size

The die stamping and/or paint stencilling shall be placed on the outside surface of each product starting after the colour coding.

The height of marking shall be as given in Table A.24 or Table C.24.

11.2.2 Colour-code identification

Unless otherwise specified on the purchase agreement, the product shall be colour-coded as specified below:

— two bands for the identification of the material category, as given in Table A.25 or Table C.25;

— one band for the identification of the grade of the material, as given in Table A.26 or Table C.26.

The bands shall be at a distance no greater than 600 mm (24 in) from the end of the product.

The bands identifying the material category shall be adjacent to the band identifying the grade, as shown in Figure B.7.

The width of the bands shall be at least 25 mm (1 in), except for couplings with copper plating on the outer surface, where the maximum width of the bands shall be 12,7 mm (0.5 in).

NOTE The outer surface copper plating can reduce the paint adherence, creating paint-peeling problems.

The detectable composition of the paint or ink shall not be detrimental to the product.

11.2.3 Die stamping

When die stamping is specified in the purchase agreement, the low-stress die stamping or vibro-etching or equivalent shall include, as a minimum, a unique identification of each product (unique product number).

11.2.4 Paint or ink stencilling

Product shall be paint or ink stencilled in the following sequence:

a) manufacturer's name or trademark;

b) reference to this International Standard;

c) date of manufacture;

d) material category and grade;

e) if agreed (see 7.2), the letters “TY” followed by the value agreed to replace 35 MPa (5 ksi);

f) for PSL-2 product, mark L2 and the UNS number; for product as specified in G.2, mark L2A as specified in G.3 and G.4;

g) heat number;

STANDARDSISO.COM : Click to view the full PDF of ISO 13680:2010

 © ISO 2010 – All rights reserved

h) outside diameter and wall thickness;

i) unique product number;

j) length, expressed in millimetres to the nearest millimetre, or metres, to two decimal places (expressed in feet, to one decimal place);

k) test lot number for mechanical and other tests;

l) hydrostatic test pressure in MPa (psi); however, if the product is not hydrostatic-pressure tested by the manufacturer, mark “00” in lieu of the MPa or “000” in lieu of the psi.

Additional marking may be applied after the above marking by agreement between the purchaser and the manufacturer.

11.3 Date of manufacture

The date of manufacture is defined as a three-digit number, consisting of the last digit of the year followed by a two-digit number indicating the month in which the markings are completed.

Products manufactured in accordance with this third edition of ISO 13680 during the period of overlap of application (see Foreword) with the second edition shall be identified by using “00” as the overlap period designation rather than the month.

12 Surface protection — Group 1

12.1 Mill varnish shall be applied on the outside surface of the product to provide protection during transportation.

The following points should be noted.

a) There should be no need for removal of the protective coating before installing the pipe in the well.

b) Correct application of the coating is essential; the following parameters should be assessed:

   1) cleanliness of the pipe,

   2) temperature at application,

   3) thickness of the coating.

After drying the pipe, the ends shall be capped or the internal surface otherwise protected; however, the caps shall include a vent hole to avoid condensation inside the product.

12.2 Internal and external protective coatings and end caps for long-term storage shall be by agreement between the purchaser and the manufacturer.

13 Documents

13.1 Electronic media

A material test report, certificate of compliance or similar document printed from or used in electronic form from an electronic data interchange (EDI) transmission shall be regarded as having the same validity as a counterpart printed in the certifier's facility. The content of the EDI-transmitted document shall meet the requirements of this International Standard and conform to any existing EDI agreement between purchaser and manufacturer.

STANDARDSISO.COM : Click to view the full PDF of ISO 13680:2010

© ISO 2010 – All rights reserved

13.2 Retention of records

Tests and inspections requiring retention of records are given in Table A.20 or Table C.20. Such records shall be retained by the manufacturer and shall be available to the purchaser on request for a period of three years after the date of purchase from the manufacturer.

13.3 Test certificates

The manufacturer's certificate shall cite this International Standard, the revision date thereof, and the PSL to which the product was manufactured. The manufacturer shall provide the following data, as applicable, for each item that is specified on the purchase agreement:

a) specified label 1 and label 2 or specified outside diameter and specified wall thickness, group, category, grade, UNS number (as applicable), process of manufacture and type of heat-treatment or cold-hardened condition and the number of lengths per cast and per test lot;

b) minimum tempering temperature allowed by the documented heat-treatment procedure for each lot of quenched and tempered product;

c) chemical analyses (cast and product analysis) showing the mass fraction, expressed as a percent, of all elements whose limits or reporting requirements are set in this International Standard;

d) test data for all tensile tests required by this International Standard, including yield strength, tensile strength and elongation, together with the orientation of specimens.

   The report shall show the nominal width of the test specimen when strip specimens are used, the diameter and gauge length when round-bar specimens are used, or it shall state when full-section specimens are used.

e) impact test results (including the test criteria, the size, location and orientation of the test specimen, the nominal test temperature, the absorbed energy measured for each test specimen and the average absorbed energy for each set of tests), where such testing is required by this International Standard;

f) hardness test results (including Rockwell hardness numbers and mean hardness numbers, criteria and specimen location);

g) flattening test results;

h) microstructure examination results (as applicable, delta ferrite content, ferrite volume fraction and/or percent sigma phase);

i) minimum hydrostatic test pressure and duration;

j) visual inspection results;

k) non-destructive examination results, the method of inspection employed (ultrasonic, electromagnetic, or magnetic particle) and the type (orientation and internal or external) and size of the artificial reference indicators used;

l) statement of compliance to each of the dimensional requirements, which includes diameter, wall thickness, drift, length, straightness, mass and product ends (plain end out-of-squareness);

m) results of any testing or inspection required at the purchaser's option.

STANDARDSISO.COM : Click to view the full PDF of ISO 13680:2010

 © ISO 2010 – All rights reserved

14 Handling, packaging and storage

14.1 General

Handling, packaging and storage shall be suitable for the grade and consistent with the transportation and storage requirements, and shall be specified in the purchase agreement.

14.2 Handling

The handling system shall be designed to avoid any type of damage to the pipes during transit. The use of hooks or similar lifting equipment in the ends of pipes, and for materials in groups 2 to 4, contact with ferrous metallic materials, shall be prohibited.

14.3 Packaging

14.3.1 General

Products shall be packaged in suitable boxes or, by agreement, using another suitable transportation system. Contact between products should be avoided by the use of plastic or other separators, while contact between products and wood should be avoided by the use of plastic film not less than 0,2 mm (0.008 in) thick. Precautions shall be taken in order to avoid the trapping of humidity under the plastic film.

Material used for packaging shall not cause iron contamination to the product.

14.3.2 Identification

Packaging shall include the following minimum identification data:

a) manufacturer's name or mark;

b) type of product and reference to this International Standard;

c) material category and grade;

d) PSL indication;

e) dimensions;

f) number of pieces;

g) gross mass;

h) purchase agreement number;

i) purchaser's name and address.

14.4 Storage

Products awaiting final delivery or machining should be stored in a covered and dry place, away from pollution sources such as metallic powder, sea spray and standing water.

Products shall be free of corrosion and corrosion products when delivered to the purchaser.

Boxes or other transportation systems shall be placed at least 100 mm (4 in) above the ground. Care shall be taken during handling in order to avoid damage to packages and protection.

STANDARDSISO.COM : Click to view the full PDF of ISO 13680:2010

© ISO 2010 – All rights reserved

Annex A
(normative)

Tables in SI units

Table A.1 — Products manufacturing process, starting material, products forming and heat-treatment conditions

Starting material	Products forming conditions	Heat-treatment or cold-hardened conditions	Symbol
1	2	3	4
Ingot/billet or rolled/forged bar	Hot finished — Hot-rolled/forged or — Hot-extruded	Quenched and tempered	QT
		Solution-annealed	SA
Ingot/billet or rolled/forged/machined bar	Cold-hardened[a] — Cold drawing or — Cold pilgering	Cold-hardened	CH
		Solution-annealed	SA
Hot finished hollow	Cold-hardened[a] — Cold drawing or — Cold pilgering	Cold-hardened	CH
		Solution-annealed	SA

[a] For cold-hardened products, there shall be a minimum reduction in area ratio of 3:1 between the cast ingot or billet and the last hot working or heat treatment.

STANDARDSISO.COM : Click to view the full PDF of ISO 13680:2010

© ISO 2010 – All rights reserved

Table A.2 — Generic analysis of corrosion-resistant alloy and material categories

Material			Typical analysis % mass fraction					Grade[b]						PRE[c] min. number
Group	Structure	Category[a]	C	Cr	Ni	Mo	N	65	80	95	110	125	140	
1	2	3	4	5	6	7	8	9	10	11	12	13	14	15
1	Martensitic	13-5-2	0,02	13	5	2		N	Y	Y	Y	N	N	NA
	Martensitic/ferritic	13-1-0	0,03	13	0,5		0,01	N	Y	Y	Y	N	N	NA
2	Duplex austenitic/ferritic	22-5-3	0,02	22	5	3	0,18	Y	N	N	Y	Y	Y	35
		25-7-3	0,02	25	7	3	0,18	Y	N[d]	N	Y	Y	Y	37,5
	Super-duplex austenitic/ferritic	25-7-4	0,02	25	7	3,8	0,27	N	Y	N[e]	Y	Y	Y	40
		26-6-3	0,04	25,5	4,75	2,5	1,17	N	Y	Y	Y	Y	Y	40
3	Austenitic Fe base	27-31-4	0,02	27	31	3,5		N	N	N	Y	Y	Y	NA
		25-32-3	0,02	25	32	3		N	N	N	Y	Y	Y	NA
		22-35-4	0,03	22	35,5	4,5		N	N	N	Y	Y	N	NA
4	Austenitic Ni base	21-42-3	0,02	21	42	3		N	N	N	Y	Y	N	NA
		22-50-7	0,02	22	50	7		N	N	N	Y	Y	Y	NA
		25-50-6	0,03	25	50	6		N	N	N	Y	Y	Y	NA
		20-54-9	0,01	20	54	9	Fe = 17	N	N	N	Y	Y	Y	NA
		22-52-11	0,02	21,5	52	11		N	N	N	Y	Y	N	NA
		15-60-16	0,01	15	60	16	W = 4	N	N	N	Y	Y	Y	NA

[a] Designation of categories:
- 1st digit: nominal chromium content;
- 2nd digit: nominal nickel content;
- 3rd digit: nominal molybdenum content.

[b] "Y" signifies "generally available".
"N" signifies "generally not available".

[c] PRE = % Cr + 3,3 (% Mo + 0,5 % W) + 16 % N
Group 2 may contain tungsten.

[d] A 75 grade is available.

[e] A 90 grade is available.

STANDARDSISO.COM : Click to view the full PDF of ISO 13680:2010

© ISO 2010 – All rights reserved

Table A.3 — Mechanical properties at room temperature

Material			Delivery condition	Yield strength $R_{p0,2}$ MPa		Tensile strength[a] R_m MPa	Elongation[b] e %	Mean hardness number HRC
Group	Category	Grade		min.	max.	min.	min.	max.
1	2	3	4	5	6	7	8	9
1	13-5-2	80	HF or QT	552	655	621	b	27
		95	HF or QT	655	758	724	b	28
		110	HF or QT	758	965	793	b	32
	13-1-0	80	HF or QT	552	655	655	b	23
		95	HF or QT	655	758	724	b	26
		110	HF or QT	758	965	827	b	32
2	22-5-3	65	SA	448	621	621	25	26
		110	CH	758	965	862	11	36
		125	CH	862	1 034	896	10	37
		140	CH	965	1 103	1 000	9	38
	25-7-3	75	SA	517	689	621	25	26
		110	CH	758	965	862	11	36
		125	CH	862	1 034	896	10	37
		140	CH	965	1 103	1 000	9	38
	25-7-4	80	SA	552	724	758	20	28
		90	SA	621	724	793	20	30
		110	CH	758	965	862	12	36
		125	CH	862	1 034	896	10	37
		140	CH	965	1 103	1 000	9	38
	26-6-3	80	SA	552	724	758	20	28
		90	SA	621	724	793	20	30
		110	CH	758	965	862	12	36
		125	CH	862	1 034	896	10	37
		140	CH	965	1 103	1 000	9	38
3	27-31-4	110	CH	758	965	793	11	35
		125	CH	862	1 034	896	10	37
		140	CH	965	1 103	1 000	9	38
	25-32-3	110	CH	758	965	793	11	35
		125	CH	862	1 034	896	10	37
		140	CH	965	1 103	1 000	9	38
	22-35-4	110	CH	758	965	793	11	35
		125	CH	862	1 034	896	10	37
		140	CH	965	1 103	1 000	9	38
4	21-42-3	110	CH	758	965	793	11	35
		125	CH	862	1 034	896	10	37
	22-50-7	110	CH	758	965	793	11	35
		125	CH	862	1 034	896	10	37
		140	CH	965	1 103	1 000	9	38
	25-50-6	110	CH	758	965	793	11	35
		125	CH	862	1 034	896	10	37
		140	CH	965	1 103	1 000	9	38
	20-54-9	110	CH	758	965	793	11	35
		125	CH	862	1 034	896	10	37
		140	CH	965	1 103	1 000	9	38
	22-52-11	110	CH	758	965	793	11	35
		125	CH	862	1 034	896	10	37
		140	CH	965	1 103	1 000	9	38
	15-60-16	110	CH	758	965	793	11	35
		125	CH	862	1 034	896	10	37
		140	CH	965	1 103	1 000	9	38

a See requirement in 7.2 for relationship between tensile and yield strength.

b $e = 1944 \frac{A^{0,2}}{R_m^{0,9}}$

where

e is the minimum elongation in 50,8 mm gauge length, expressed in percent;

A is the cross-sectional area of the tensile test specimen, expressed in square millimetres, based on the specified outside diameter or nominal specimen width and the specified wall thickness, rounded to the nearest 10 mm^2, or 490 mm^2, whichever is smaller;

R_m is the specified minimum tensile strength, expressed in megapascals.

STANDARDSISO.COM : Click to view the full PDF of ISO 13680:2010

© ISO 2010 – All rights reserved

Table A.4 — Allowable mean hardness number variation — All categories

Wall thickness *t* mm		Allowable mean hardness number variation expressed as HRC	
⩾	<	Cold-hardened by pilger	All others
1	2	3	4
—	9,0	3	3
9,0	12,7	4	3
12,7	19,05	5	4
19,05	25,4	6	5
25,4	—	6	6

Table A.5 — Acceptable size-impact specimens and absorbed-energy reduction factor

Test specimen size	Specimen dimensions mm	Absorbed energy reduction factor
1	2	3
Full size	10,0 × 10,0	1,00
¾-size	10,0 × 7,5	0,80
½-size	10,0 × 5,0	0,55

Table A.6 — Hierarchy of test specimen orientation and size

Choice	Orientation	Size
1	2	3
1st	Transverse	Full size
2nd	Transverse	¾-size
3rd	Transverse	½-size
4th	Longitudinal	Full size[a]
5th	Longitudinal	¾-size[a]
6th	Longitudinal	½-size[a]

[a] When transverse Charpy V-notch tests ½ size or greater are not possible for groups 2, 3 or 4, then flattening tests are required.

STANDARDSISO.COM : Click to view the full PDF of ISO 13680:2010

© ISO 2010 – All rights reserved

Table A.7 — Transverse impact specimen size required

Label 1	Calculated wall thickness required to machine transverse Charpy impact specimens mm		
	Full size	**¾-size**	**½-size**
1	2	3	4
3-½	20,53	18,03	15,53
4	19,09	16,59	14,09
4-½	18,05	15,55	13,05
5	17,26	14,76	12,26
5-½	16,64	14,14	11,64
6-⅝	15,62	13,12	10,62
7	15,36	12,86	10,36
7-⅝	14,99	12,49	9,99
7-¾	14,92	12,42	9,92
8-⅝	14,51	12,01	9,51
9-⅝	14,13	11,63	9,13
10-¾	13,80	11,30	8,80
11-¾	13,56	11,06	8,56
13-⅜	13,24	10,74	8,24
NOTE The above provides a 0,50 mm ID and a 0,50 mm OD machining allowance.			

STANDARDSISO.COM : Click to view the full PDF of ISO 13680:2010

© ISO 2010 – All rights reserved

Table A.8 — Longitudinal impact specimen size required

Label 1	Calculated wall thickness required to machine longitudinal Charpy impact specimens mm		
	Full size	**¾-size**	**½-size**
1	2	3	4
1.050	11,97	9,47	6,97
1.315	11,77	9,27	6,77
1.66	11,60	9,10	6,60
1.9	11,52	9,02	6,52
2.063	11,48	8,98	6,48
2-⅜	11,42	8,92	6,42
2-⅞	11,34	8,84	6,34
3-½	11,28	8,78	6,28
4	11,25	8,75	6,25
4-½	11,22	8,72	6,22
5	11,20	8,70	6,20
5-½	11,18	8,68	6,18
6-⅝	11,15	8,65	6,15
7	11,14	8,64	6,14
7-⅝	11,13	8,63	6,13
7-¾	11,13	8,63	6,13
8-⅝	11,11	8,61	6,11
9-⅝	11,10	8,60	6,10
10-¾	11,09	8,59	6,09
11-¾	11,08	8,58	6,08
13-⅜	11,07	8,57	6,07

NOTE The above provides a 0,50 mm ID and a 0,50 mm OD machining allowance.

Table A.9 — Transverse Charpy absorbed-energy requirements for coupling stock, group 1

Maximum critical thickness for various grades[a] mm			Minimum transverse absorbed energy J
80	**95**	**110**	
1	2	3	4
41,73	34,61	24,89	40
—	—	25,77	41

[a] For wall thickness greater than shown above, the requirements shall be according to the equations for the critical thickness and grade.

STANDARDSISO.COM : Click to view the full PDF of ISO 13680:2010

© ISO 2010 – All rights reserved

Table A.10 — Longitudinal Charpy absorbed-energy requirements for coupling stock, group 1

Maximum critical thickness for various grades[a] mm			Minimum longitudinal absorbed energy J
80	**95**	**110**	
1	2	3	4
41,73	34,61	24,89	40
—	—	25,77	41

[a] For wall thickness greater than shown above, the requirements shall be according to the equations for the wall thickness and grade.

Table A.11 — Transverse Charpy absorbed-energy requirements for coupling stock, groups 2, 3 and 4

Maximum critical thickness for various grades[a] mm						Minimum transverse absorbed energy J
65	**75**	**80 and 90**	**110**	**125**	**140**	
1	2	3	4	5	6	7
26,85	23,15	21,51	13,48	11,86	10,45	27
	24,38	22,69	14,35	12,68	11,22	28
	25,61	23,86	15,23	13,50	11,99	29
		25,03	16,11	14,32	12,76	30
		26,20	16,99	15,14	13,53	31
			17,87	15,96	14,30	32
			18,75	16,78	15,06	33
			19,62	17,60	15,83	34
			20,50	18,42	16,60	35
			21,38	19,24	17,37	36
			22,26	20,06	18,14	37
			23,14	20,88	18,91	38
			24,01	21,70	19,67	39
			24,89	22,52	20,44	40
			25,77	23,34	21,21	41
				24,16	21,98	42
				24,98	22,75	43
				25,80	23,52	44
					24,28	45
					25,05	46
					25,82	47

[a] For wall thickness greater than shown above, the requirements shall be in accordance with the equations for the wall thickness and grade.

STANDARDSISO.COM : Click to view the full PDF of ISO 13680:2010

© ISO 2010 – All rights reserved

Table A.12 — Transverse Charpy absorbed-energy requirements for pipe, group 1

Maximum specified wall thickness for various grades[a] mm			Minimum transverse absorbed energy J
80	**95**	**110**	
1	2	3	4
51,50	41,73	34,61	40

[a] Wall thicknesses greater than standard pipe are shown here for information for special applications. For wall thicknesses greater than shown above, the requirements shall be according to the equations for the wall thickness and grade.

Table A.13 — Longitudinal Charpy absorbed-energy requirements for pipe, group 1

Maximum specified wall thickness for various grades[a] mm			Minimum longitudinal absorbed energy J
80	**95**	**110**	
1	2	3	4
51,50	41,73	34,61	40

[a] Wall thicknesses greater than standard pipe are shown here for information for special applications. For wall thicknesses greater than shown above, the requirements shall be according to the equations for the wall thickness and grade.

Table A.14 — Transverse Charpy absorbed-energy requirements for pipe, groups 2, 3 and 4

Maximum specified wall thickness for various grades[a] mm							Minimum transverse absorbed energy J
65	**75**	**80**	**90**	**110**	**125**	**140**	
1	2	3	4	5	6	7	8
41,35	34,40	31,54	26,85	20,07	16,36	13,48	27
				21,19	17,34	14,35	28
				22,31	18,33	15,23	29
				23,43	19,31	16,11	30
				24,54	20,29	16,99	31
				25,66	21,28	17,87	32
					22,26	18,75	33
					23,24	19,62	34
					24,23	20,50	35
					25,21	21,38	36
					26,19	22,26	37
						23,14	38
						24,01	39
						24,89	40
						25,77	41

[a] Wall thicknesses greater than standard pipe are shown here for information for special applications. For wall thicknesses greater than shown above, the requirements shall be according to the equations for the wall thickness and grade.

STANDARDSISO.COM : Click to view the full PDF of ISO 13680:2010

© ISO 2010 – All rights reserved

Table A.15 — Specified dimensions and masses of pipe

Label 1	Label 2	Outside diameter *D* mm	Wall thickness *t* mm	Inside diameter[a] *d* mm	Drift diameter[b] mm	Alternate drift diameter mm	Linear mass[c] plain end kg/m
1	2	3	4	5	6	7	8
1.050	1.14	26,67	2,87	20,93	18,55	—	1,68
1.050	1.48	26,67	3,91	18,85	16,47	—	2,19
1.315	1.70	33,40	3,38	26,64	24,26	—	2,50
1.315	2.19	33,40	4,55	24,30	21,92	—	3,24
1.660	2.09	42,16	3,18	35,80	33,42	—	3,06
1.660	2.30	42,16	3,56	35,04	32,66	—	3,39
1.660	3.03	42,16	4,85	32,46	30,08	—	4,46
1.900	2.40	48,26	3,18	41,90	39,52	—	3,54
1.900	2.75	48,26	3,68	40,90	38,52	—	4,05
1.900	3.65	48,26	5,08	38,10	35,72	—	5,41
1.900	4.42	48,26	6,35	35,56	33,18	—	6,56
1.900	5.15	48,26	7,62	33,02	30,64	—	7,64
2-⅜	4.00	60,32	4,24	51,84	49,46	—	5,86
2-⅜	4.60	60,32	4,83	50,66	48,28	—	6,61
2-⅜	5.80	60,32	6,45	47,42	45,04	—	8,57
2-⅜	6.60	60,32	7,49	45,34	42,96	—	9,76
2-⅜	7.35	60,32	8,53	43,26	40,88	—	10,89
2-⅞	6.40	73,02	5,51	62,00	59,62	—	9,17
2-⅞	7.80	73,02	7,01	59,00	56,62	—	11,41
2-⅞	8.60	73,02	7,82	57,38	55,00	—	12,57
2-⅞	9.35	73,02	8,64	55,74	53,36	—	13,72
2-⅞	10.50	73,02	9,96	53,10	50,72	—	15,49
2-⅞	11.50	73,02	11,18	50,66	48,28	—	17,05

STANDARDSISO.COM : Click to view the full PDF of ISO 13680:2010

© ISO 2010 – All rights reserved

Table A.15 (*continued*)

Label 1	Label 2	Outside diameter *D* mm	Wall thickness *t* mm	Inside diameter[a] *d* mm	Drift diameter[b] mm	Alternate drift diameter mm	Linear mass[c] plain end kg/m
1	2	3	4	5	6	7	8
3-½	7.70	88,90	5,49	77,92	74,74	—	11,29
3-½	9.20	88,90	6,45	76,00	72,82	—	13,12
3-½	10.20	88,90	7,34	74,22	71,04	—	14,76
3-½	12.70	88,90	9,52	69,86	66,68	—	18,64
3-½	14.30	88,90	10,92	67,06	63,88	—	21,00
3-½	15.50	88,90	12,09	64,72	61,54	—	22,90
3-½	17.00	88,90	13,46	61,98	58,80	—	25,04
4	9.50	101,60	5,74	90,12	86,94	—	13,57
4	10.70	101,60	6,65	88,30	85,12	—	15,57
4	13.20	101,60	8,38	84,84	81,66	—	19,27
4	16.10	101,60	10,54	80,52	77,34	—	23,67
4	18.90	101,60	12,70	76,20	73,02	—	27,84
4	22.20	101,60	15,49	70,62	67,44	—	32,89
4-½	9.50	114,30	5,21	103,88	100,70	—	14,02
4-½	10.50	114,30	5,69	102,92	99,74	—	15,24
4-½	11.60	114,30	6,35	101,60	98,42	—	16,91
4-½	12.60	114,30	6,88	100,54	97,36	—	18,23
4-½	13.50	114,30	7,37	99,56	96,38	—	19,44
4-½	15.10	114,30	8,56	97,18	94,00	—	22,32
4-½	17.00	114,30	9,65	95,00	91,82	—	24,90
4-½	18.90	114,30	10,92	92,46	89,28	—	27,84
4-½	21.50	114,30	12,70	88,90	85,72	—	31,82
4-½	23.70	114,30	14,22	85,86	82,68	—	35,10
4-½	26.10	114,30	16,00	82,30	79,12	—	38,79
5	11.50	127,00	5,59	115,82	112,64	—	16,74
5	13.00	127,00	6,43	114,14	110,96	—	19,12
5	15.00	127,00	7,52	111,96	106,78	—	22,16
5	18.00	127,00	9,19	108,62	105,44	—	26,70
5	21.40	127,00	11,10	104,80	101,62	—	31,73
5	23.30	127,00	12,14	102,72	99,54	—	34,39
5	24.10	127,00	12,70	101,60	98,42	—	35,80

STANDARDSISO.COM : Click to view the full PDF of ISO 13680:2010

© ISO 2010 – All rights reserved

Table A.15 (*continued*)

Label 1	Label 2	Outside diameter *D* mm	Wall thickness *t* mm	Inside diameter[a] *d* mm	Drift diameter[b] mm	Alternate drift diameter mm	Linear mass[c] plain end kg/m
1	2	3	4	5	6	7	8
5-½	14.00	139,70	6,20	127,30	124,12	—	20,41
5-½	15.50	139,70	6,98	125,74	122,56	—	22,85
5-½	17.00	139,70	7,72	124,26	121,08	—	25,13
5-½	20.00	139,70	9,17	121,36	118,18	—	29,52
5-½	23.00	139,70	10,54	118,62	115,44	—	33,57
5-½	26.80	139,70	12,70	114,30	111,12	—	39,78
5-½	29.70	139,70	14,27	111,16	107,98	—	44,14
5-½	32.60	139,70	15,88	107,94	104,76	—	48,49
5-½	35.30	139,70	17,45	104,80	101,62	—	52,61
5-½	38.00	139,70	19,05	101,60	98,42	—	56,68
5-½	40.50	139,70	20,62	96,46	95,28	—	60,55
5-½	43.10	139,70	22,22	95,26	92,08	—	64,38
6-⅝	20.00	168,28	7,32	153,64	150,46	—	29,06
6-⅝	24.00	168,28	8,94	150,40	147,22	—	35,13
6-⅝	28.00	168,28	10,59	147,10	143,92	—	41,18
6-⅝	32.00	168,28	12,06	144,16	140,98	—	46,46
7	17.00	177,80	5,87	166,06	162,88	—	24,89
7	20.00	177,80	6,91	163,98	160,80	—	29,12
7	23.00	177,80	8,05	161,70	158,52	158,75	33,70
7	26.00	177,80	9,19	159,42	156,24	—	38,21
7	29.00	177,80	10,36	157,08	153,90	—	42,78
7	32.00	177,80	11,51	154,78	151,60	152,40	47,20
7	35.00	177,80	12,65	152,50	149,32	—	51,52
7	38.00	177,80	13,72	150,36	147,18	—	55,52
7	42.70	177,80	15,88	146,04	142,86	—	63,41
7	46.40	177,80	17,45	142,90	139,72	—	69,01
7	50.10	177,80	19,05	139,70	136,52	—	74,58
7	53.60	177,80	20,62	136,56	133,38	—	79,93
7	57.10	177,80	22,22	133,36	130,18	—	85,25

STANDARDSISO.COM : Click to view the full PDF of ISO 13680:2010

© ISO 2010 – All rights reserved

Table A.15 (*continued*)

Label 1	Label 2	Outside diameter *D* mm	Wall thickness *t* mm	Inside diameter[a] *d* mm	Drift diameter[b] mm	Alternate drift diameter mm	Linear mass[c] plain end kg/m
1	2	3	4	5	6	7	8
7-⅝	24.00	193,68	7,62	178,44	175,26	—	34,96
7-⅝	26.40	193,68	8,33	177,02	173,84	—	38,08
7-⅝	29.70	193,68	9,52	174,64	171,46	—	43,24
7-⅝	33.70	193,68	10,92	171,84	168,66	—	49,22
7-⅝	39.00	193,68	12,70	168,28	165,10	—	56,68
7-⅝	42.80	193,68	14,27	165,14	161,96	—	63,14
7-⅝	45.30	193,68	15,11	163,46	160,28	—	66,54
7-⅝	47.10	193,68	15,88	161,92	158,74	—	69,63
7-⅝	51.20	193,68	17,45	158,78	155,60	—	75,84
7-⅝	55.30	193,68	19,05	155,58	152,40	—	82,04
7-¾	46.10	196,85	15,11	166,63	163,45	165,10	67,72
8-⅝	24.00	219,08	6,71	205,66	202,48	—	35,14
8-⅝	28.00	219,08	7,72	203,64	200,46	—	40,24
8-⅝	32.00	219,08	8,94	201,20	198,02	200,02	46,33
8-⅝	36.00	219,08	10,16	198,76	195,58	—	52,35
8-⅝	40.00	219,08	11,43	196,22	193,04	193,68	58,53
8-⅝	44.00	219,08	12,70	193,68	190,50	—	64,64
8-⅝	49.00	219,08	14,15	190,78	187,60	—	71,51
9-⅝	32.30	244,48	7,92	228,64	224,67	—	46,20
9-⅝	36.00	244,48	8,94	226,60	222,63	—	51,93
9-⅝	40.00	244,48	10,03	224,42	220,45	222,25	57,99
9-⅝	43.50	244,48	11,05	222,38	218,41	—	63,61
9-⅝	47.00	244,48	11,99	220,50	216,53	—	68,75
9-⅝	53.50	244,48	13,84	216,80	212,83	215,90	78,72
9-⅝	58.40	244,48	15,11	214,26	210,29	212,75	85,47
9-⅝	59.40	244,48	15,47	213,54	209,57	—	87,37
9-⅝	64.90	244,48	17,07	210,34	206,37	—	95,73
9-⅝	70.30	244,48	18,64	207,20	203,23	—	103,82
9-⅝	75.60	244,48	20,24	204,00	200,03	—	111,93

STANDARDSISO.COM : Click to view the full PDF of ISO 13680:2010

© ISO 2010 – All rights reserved

Table A.15 (*continued*)

Label 1	Label 2	Outside diameter D mm	Wall thickness t mm	Inside diameter[a] d mm	Drift diameter[b] mm	Alternate drift diameter mm	Linear mass[c] plain end kg/m
1	2	3	4	5	6	7	8
10-¾	32.75	273,05	7,09	258,87	254,90	—	46,50
10-¾	40.50	273,05	8,89	255,27	251,30	—	57,91
10-¾	45.50	273,05	10,16	252,73	248,76	250,82	65,87
10-¾	51.10	273,05	11,43	250,19	246,22	—	73,75
10-¾	55.50	273,05	12,57	247,91	243,94	244,48	80,75
10-¾	60.70	273,05	13,84	245,37	241,40	—	88,47
10-¾	65.70	273,05	15,11	242,83	238,86	—	96,12
10-¾	73.20	273,05	17,07	238,91	234,94	—	107,76
10-¾	79.20	273,05	18,64	235,77	231,80	—	116,95
10-¾	85.30	273,05	20,24	232,57	228,60	—	126,19
11-¾	42.00	298,45	8,46	281,53	277,56	279,40	60,50
11-¾	47.00	298,45	9,52	279,41	275,44	—	67,83
11-¾	54.00	298,45	11,05	276,35	272,38	—	78,32
11-¾	60.00	298,45	12,42	273,61	269,64	269,88	87,61
11-¾	65.00	298,45	13,56	271,33	267,36	269,88	95,27
11-¾	71.00	298,45	14,78	268,89	264,92	—	103,40
13-⅜	48.00	339,72	8,38	322,96	318,99	—	68,48
13-⅜	54.50	339,72	9,65	320,42	316,45	—	78,55
13-⅜	61.00	339,72	10,92	317,88	313,91	—	88,55
13-⅜	68.00	339,72	12,19	315,34	311,37	—	98,47
13-⅜	72.00	339,72	13,06	313,60	309,63	311,15	105,21

a $d = D - 2t$.

b The drift diameter is equal to d minus a constant (see Table A.18).

c $m = 0{,}024\ 661\ 5 \times (D - t) \times t$; see 8.1.1 for the multiplication factors with regard to the groups.

STANDARDSISO.COM : Click to view the full PDF of ISO 13680:2010

Table A.16 — Range length

Dimensions in metres

Pipes for		Range 1 (R1)	Range 2 (R2)	Range 3 (R3)
1		2	3	4
Casing and tubing	Total range length, inclusive	4,88 to 7,62	7,62 to 10,36	10,36 to 14,63
	Maximum permissible variation on 100 % on each quantity of 18 t per order item	1,52		
Pup joints	Length[a]	0,61; 0,91; 1,22; 1,83; 2,44; 3,05; 3,66		
	Tolerance	±0,076		
Coupling stock		By agreement		

a 0,61 m pup joints may be furnished up to 0,91 m long by agreement between manufacturer and purchaser; lengths other than those listed may be furnished by agreement between manufacturer and purchaser.

© ISO 2010 – All rights reserved

Table A.17 — Tolerances on dimensions and mass

Outside diameter D mm	Tolerance for supply condition					
	Outside diameter[a]		Wall thickness		Mass[b]	
	QT — SA	CH	QT — SA	CH	QT — SA	CH
1	2	3	4	5	6	7
< 114,3	±0,79 mm	±0,79 mm	$^{-}_{-12,5}$ %	$^{-}_{-10}$ %	$^{+6,5}_{-3,5}$ %	$^{+6,5}_{-3,5}$ %
⩾ 114,3	$^{+1}_{-0,5}$ %	$^{+1}_{-0,5}$ %	$^{-}_{-12,5}$ %	$^{-}_{-10}$ %	$^{+6,5}_{-3,5}$ %	$^{+6,5}_{-3,5}$ %

a Out-of-roundness is included in the D tolerance.

b The tolerance is quoted for a single length. On each quantity of 18 t per order item, the tolerance is –1,75 %.

Table A.18 — Standard drift mandrel dimensions

Dimensions in millimetres

Pipes for	Outside diameter D		Drift mandrel size minimum	
	>	⩽	Length	Diameter
1	2	3	4	5
Casing	—	219,08	152	d – 3,18
	219,08	—	305	d – 3,97
Tubing	—	73,03	1 067	d – 2,38
	73,03	—	1 067	d – 3,18

NOTE d is given in Table A.15.

Table A.19 — Alternate drift mandrel dimensions

Label 1	Label 2	Outside diameter D mm	Wall thickness t mm	Drift mandrel size minimum		Linear mass plain end kg/m
				Length mm	Diameter mm	
1	2	3	4	5	6	7
7	23.00	177,80	8,05	152	158,75	33,70
7	32.00	177,80	11,51	152	152,40	47,20
7-¾	46.10	196,85	15,11	152	165,10	67,72
8-⅝	32.00	219,08	8,94	152	200,02	46,33
8-⅝	40.00	219,08	11,43	152	193,68	58,53
9-⅝	40.00	244,48	10,03	305	222,25	57,99
9-⅝	53.50	244,48	13,84	305	215,90	78,72
9-⅝	58.40	244,48	15,11	305	212,75	85,47
10-¾	45.50	273,05	10,16	305	250,82	65,87
10-¾	55.50	273,05	12,57	305	244,48	80,75
11-¾	42.00	298,45	8,46	305	279,40	60,50
11-¾	60.00	298,45	12,42	305	269,88	87,61
11-¾	65.00	298,45	13,56	305	269,88	95,27
13-⅜	72.00	339,72	13,06	305	311,15	105,21

STANDARDSISO.COM : Click to view the full PDF of ISO 13680:2010

© ISO 2010 – All rights reserved

Table A.20 — Type and frequency of tests for non-upset and upset product

Type of test or requirements		Test requirements[a]	Frequency of testing[b]	Test methods	Requirements
1		2	3	4	5
Cast analysis		m[d]	1 per cast	9.3.2	7.1
Product analysis	Non-remelted alloy	m[d]	2 per cast	9.3.2	7.1
	Remelted alloy	m[d]	1 per ingot	9.3.2	7.1
Room-temperature tensile test		m[d]	1 per test lot[c]	9.5.2	7.2
Elevated-temperature tensile test		o[d]	1 per test lot[c]	9.5.2	7.2
Hardness test		m[d]	1 series/test lot[c]	9.6.2	7.3
Impact or flattening test		m[d]	9.7.2	9.7.3 or 9.7.4.1	7.4, 7.5, 7.6, 7.7
Microstructure examination		m[d]	1 per test lot[c]	9.8.2	7.9
Visual inspection		m	Each product	9.15	7.10, 7.11, 8.4
Hydrostatic test		m[d] (o [h])[d]	Each pipe	9.14	7.12
Dimensional testing:					
— Outside diameter		m	Each end	9.9.2	Table A.15 and Table A.17
— Wall thickness		m	Each end	9.9.3	Table A.15 and Table A.17
— Drift test[e]		m	Each pipe	9.10	Table A.15 and Table A.18 or Table A.19
— Length		m	Each product	9.11	Table A.16
— Straightness		m	Each pipe	9.12	8.3.3
— Mass		m	Each product	9.13	Table A.15 and Table A.17
Non-destructive examination:					
— UT for longitudinal defects		m[d]	Each product	9.16	7.11
— UT for transverse defects		m[d]	Each product	9.16	7.11
— UT for laminar defects		m[d]	Each product	9.16	7.11
— UT for wall thickness[e]		m[d]	Each product	9.16	7.11
— UT manual on upset L + T[e]		m[d] (o[f])[d]	Each product	9.16	7.11
— EMI[e]		o[d,f]	Each product	9.16	7.11
— Liquid penetrant inspection		m (o[f])	Only ground or machined area	9.16	7.11
— MT		o[f] (m[g])	Only ground or machined area	9.16	7.11

[a] "m" signifies mandatory; "o" signifies optional (an agreement is required).

[b] For definition of "test lot", see 4.1.19. See Table A.21 for the maximum number of product in a test lot.

[c] Minimum 1 per cast.

[d] It is required that records be retained.

[e] Not applicable to coupling stock.

[f] Option for group 1 only.

[g] Mandatory for upset ends of group 1.

[h] Option for CH only.

STANDARDSISO.COM : Click to view the full PDF of ISO 13680:2010

© ISO 2010 – All rights reserved

Table A.21 — Maximum number of product per test lot

Group	Number[a] of lengths of product for	
	Pipe	Coupling stock
1	2	3
1	100	20
2, 3, 4	50	10

[a] Residual quantities of less than 20 % of the maximum number of product per test lot may be added to one test lot per heat.

NOTE For the pup joints see 9.2.

Table A.22 — Artificial reference indicator

Acceptance inspection level	Notch depth[a] max.	Notch length (max. at full depth)	Width max.	Radially drilled hole diameter[b]
1	2	3	4	5
L2	5 %	50 mm	1 mm	1,6 mm

[a] Depth as a percent of specified wall thickness. The depth tolerance shall be ±15 % of the calculated notch depth with a minimum notch depth of 0,3 mm ± 0,05 mm.

[b] Drilled hole diameter (through the pipe wall) shall be based on the drill bit size.

Table A.23 — Acceptance level

Group	NDT method	External imperfection		Internal imperfection	
		Longitudinal	Transverse	Longitudinal	Transverse
1	2	3	4	5	6
1	UT	L2	L2	L2	L2
	MT or EMI	L2	—	—	—
2, 3, 4	UT	L2	L2	L2	L2

Table A.24 — Marking height

Dimensions in millimetres

D	Minimum height of marking	
	Die stamping	Paint or ink stencilling
1	2	3
⩽ 101,60	4	⩾ 8
> 101,60	6	⩾ 12

STANDARDSISO.COM : Click to view the full PDF of ISO 13680:2010

© ISO 2010 – All rights reserved

Table A.25 — Colour coding for material category

Material category	Colour coding
1	2
13-5-2	white and green
13-1-0	white and red
22-5-3	red and red
25-7-3	red and orange
25-7-4	red and yellow
26-6-3	green and green
27-31-4	green and brown
25-32-3	green and orange
22-35-4	white and blue
21-42-3	yellow and yellow
22-50-7	yellow and orange
25-50-6	yellow and green
20-54-9	yellow and blue
22-52-11	white and brown
15-60-16	yellow and brown

Table A.26 — Colour coding for material grade

Material grade	Colour coding
1	2
65	yellow
75	blue
80	red
90	brown
95	silver
110	white
125	orange
140	green

STANDARDSISO.COM : Click to view the full PDF of ISO 13680:2010

© ISO 2010 – All rights reserved

Table A.27 — PSL-2 product mechanical properties at room temperature
(SI units)

Material identity from Table A.2		UNS number	Grade	Delivery condition	Yield strength[f] $R_{p0,2}$ MPa		Tensile strength[a] R_m MPa	Elongation[b] e %	Mean hardness number[f] HRC
Group	Category				min.	max.	min.	min.	max.
1	2	3	4	5	6	7	8	9	10
1	13-5-2	S41426[c]	80	QT	552	655	621	b	27
			95	QT	655	724	724	b	27
2	22-5-3	S31803[d]	65	SA	448	621	621	25	26
			110	CH	758	965	862	11	36
			125	CH	862	1 000	896	10	36
	25-7-3	S31260[d]	75	SA	517	689	621	25	26
			110	CH	758	965	862	11	36
			125	CH	862	1 000	896	10	36
	25-7-4	S32750[d]	80	SA	552	724	758	20	28
			90	SA	621	724	793	20	30
			110	CH	758	965	862	12	36
			125	CH	862	1 000	896	10	36
		S32760[d]	80	SA	552	724	758	20	28
			90	SA	621	724	793	20	30
			110	CH	758	965	862	12	36
			125	CH	862	1 000	896	10	36
		S39274[d]	80	SA	552	724	758	20	28
			90	SA	621	724	793	20	30
			110	CH	758	965	862	12	36
			125	CH	862	1 000	896	10	36
3	27-31-4	N08028[e]	110	CH	758	965	793	11	33
			125	CH	862	1 000	896	10	35
	25-32-3	N08535[e]	110	CH	758	965	793	11	33
			125	CH	862	1 000	896	10	35
	22-35-4	N08135[e]	110	CH	758	965	793	11	33
4	21-42-3	N08825[e]	110	CH	758	965	793	11	35
			125	CH	862	1 000	896	10	35
	22-50-7	N06985[e]	110	CH	758	965	793	11	35
			125	CH	862	1 034	896	10	37
	25-50-6	N06255[e]	110	CH	758	965	793	11	35
			125	CH	862	1 034	896	10	37
		N06975[e]	110	CH	758	965	793	11	35
			125	CH	862	1 034	896	10	37
	20-54-9	N06950[e]	110	CH	758	965	793	11	35
			125	CH	862	1 034	896	10	37
	15-60-16	N10276[e]	110	CH	758	965	793	11	35
			125	CH	862	1 034	896	10	37
			140	CH	965	1 103	1 000	9	38

a See requirement in 7.2 for relation between tensile and yield strength.

b $e = 1944 \frac{A^{0,2}}{R_m^{0,9}}$

where

e is the minimum elongation in 50,8 mm gauge length, expressed in percent;

A is the cross-sectional area of the tensile test specimen, expressed in square millimetres, based on specified outside diameter or nominal specimen width and specified wall thickness, rounded to the nearest 10 mm^2, or 490 mm^2, whichever is smaller;

R_m is the specified minimum tensile strength, expressed in megapascals.

c From ISO 15156-3:2009, Table D.6.

d From ISO 15156-3:2009, Table D.7.

e From ISO 15156-3:2009, Table D.3.

f Other values may be agreed between purchaser and manufacturer, subject to the requirements in G.2.

STANDARDSISO.COM : Click to view the full PDF of ISO 13680:2010

© ISO 2010 – All rights reserved

Table A.28 —PSL-2 chemical composition of corrosion-resistant alloy and material categories
(SI units)

Material identity from Table A.2			UNS number	Chemical composition maximum % mass fraction or range, unless otherwise indicated																	PRE[b] range no.
Group	Structure	Category[a]		C	Cr	Ni	Fe[c]	Mn	Si	Mo	Co	Cu	P	S	Ti	Nb + Ta	V	W	N	Al	
1	2	3	4	5	6	7	8	9	10	11	12	13	14	15	16	17	18	19	20	21	22
1	Marten-sitic	13-5-2	S41426[d]	0,03	11,5 to 13,5	4,5 to 6,5	bal.	0,5	0,5	1,5 to 3	—	—	0,02	0,005	0,01 to 0,5	—	0,5	—	—	—	NA
2	Duplex austenitic/ ferritic	22-5-3	S31803[e]	0,03	21,0 to 23,0	4,5 to 6,5	bal.	2	1	2,50 to 3,50	—	—	0,03	0,02	—	—	—	—	0,08 to 0,20	—	35 to 40
		25-7-3	S31260[e]	0,03	24,0 to 26,0	5,5 to 7,5	bal.	1	0,75	2,5 to 3,5	—	0,20 to 0,80	0,03	0,03	—	—	—	0,10 to 0,50	0,10 to 0,30	—	37,5 to 40
	Super-duplex austenitic/ ferritic	25-7-4	S32750[e]	0,03	24,0 to 26,0	6,0 to 8,0	bal.	1,2	0,8	3,0 to 4,0	—	—	0,035	0,02	—	—	—		0,24 to 0,32	—	40 to 45
			S32760[e]	0,03	24,0 to 26,0	6,0 to 8,0	bal.	1	1	3,0 to 4,0	—	0,5 to 1,0	0,03	0,01	—	—	—	0,5 to 1,0	0,2 to 0,3	—	40 to 45
			S39274[e]	0,030	24,0 to 26,0	6,0 to 8,0	bal.	1	0,8	2,5 to 3,5	—	0,20 to 0,80	0,030	0,02	—	—	—	1,50 to 2,50	0,24 to 0,32	—	40 to 45
3	Austenitic Fe base	27-31-4	N08028[f]	0,03	26,0 to 28,0	29,5 to 32,5	bal.	2,50	1,00	3,0 to 4,0	—	0,6 to 1,4	0,030	0,030	—	—	—	—	—	—	NA
		25-32-3	N08535[f]	0,030	24,0 to 27,0	29,0 to 36,5 [g]	bal.	1,00	0,50	2,5 to 4,0	[g]	1,50	0,03	0,03	—	—	—	—	—	—	NA
		22-35-4	N08135[f]	0,03	20,5 to 23,5	33,0 to 38,0	bal.	1,00	0,75	4,0 to 5,0	—	0,70	0,03	0,03	—	—	—	0,2 to 0,8	—	—	NA

STANDARDSISO.COM : Click to view the full PDF of ISO 13680:2010

© ISO 2010 – All rights reserved

Table A.28 (*continued*)

Material identity from Table A.2			UNS number	Chemical composition maximum % mass fraction or range, unless otherwise indicated																	PRE[b] range no.
Group	Structure	Category[a]		C	Cr	Ni	Fe[c]	Mn	Si	Mo	Co	Cu	P	S	Ti	Nb + Ta	V	W	N	Al	
1	2	3	4	5	6	7	8	9	10	11	12	13	14	15	16	17	18	19	20	21	22
4	Austenitic Ni base	21-42-3	N08825[f]	0,05	19,5 to 23,5	38,0 to 46,0	bal.	1,00	0,5	2,5 to 3,5	—	1,5 to 3,0	0,03	0,03	0,6 to 1,2	—	—	—	—	0,2	NA
		22-50-7	N06985[f]	0,015	21,0 to 23,5	bal.	18,0 to 21,0	1,00	1,00	6,0 to 8,0	5,0	1,5 to 2,5	0,04	0,03	—	0,50	—	1,5	—	—	NA
		25-50-6	N06255[f]	0,03	23,0 to 26,0	47,0 to 52,0	bal.	1,00	0,03	6,0 to 9,0	—	1,20	0,03	0,03	0,69	—	—	3,0	—	—	NA
			N06975[f]	0,03	23,0 to 26,0	47,0 to 52,0	bal.	1,00	1,00	5,0 to 7,0[h]	—	0,70 to 1,20	0,03	0,03	0,70 to 1,50	—	—	[h]	—	—	NA
		20-54-9	N06950[f]	0,015	19,0 to 21,0	50,0 min	15,0 to 20,0	1,00	1,00	8,0 to 10,0	2,5	0,5	0,04	0,015	—	0,50	0,04	1,0	—	—	NA
		15-60-16	N10276[f]	0,02	14,5 to 16,5	bal.[i]	4,0 to 7,0	1,00	0,08	15,0 to 17,0	2,5[i]	—	0,030	0,030	—	—	0,35	3,0 to 4,5	—	—	NA

a Designation of categories:
— 1st digit: nominal chromium content;
— 2nd digit: nominal nickel content;
— 3rd digit: nominal molybdenum content.

b PRE = % Cr + 3,3 (% Mo + 0,5 % W) + 16 % N.

c Bal. is the balance of composition up to 100 %, determined arithmetically by difference.

d From ISO 15156-3:2009, Table D.6.

e From ISO 15156-3:2009, Table D.7.

f From ISO 15156-3:2009, Table D.3.

g Ni + Co = 29,5 % minimum.

h When specified, Mo + W = 6 % minimum.

i Ni + Co = 52 % minimum.

STANDARDSISO.COM : Click to view the full PDF of ISO 13680:2010

© ISO 2010 – All rights reserved

Annex B
(normative)

Figures in SI (USC) Units

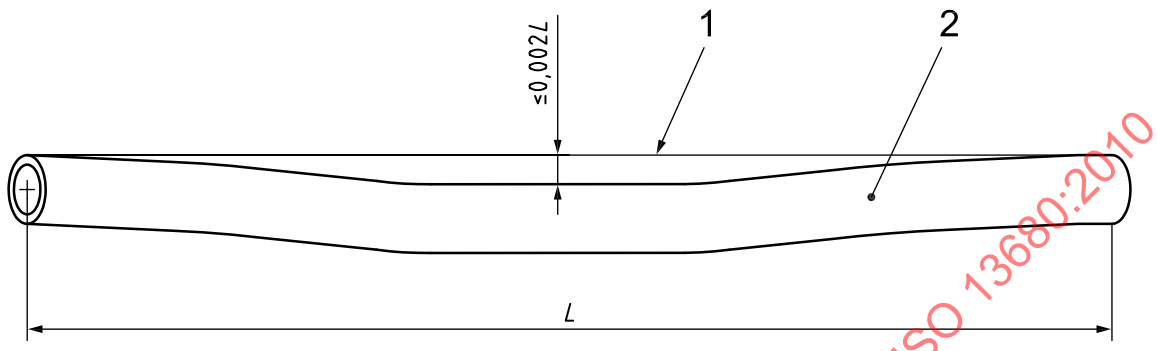

Key

1 taut string or wire
2 pipe

Figure B.1 — Measuring full-length straightness

Dimensions in millimetres (inches)

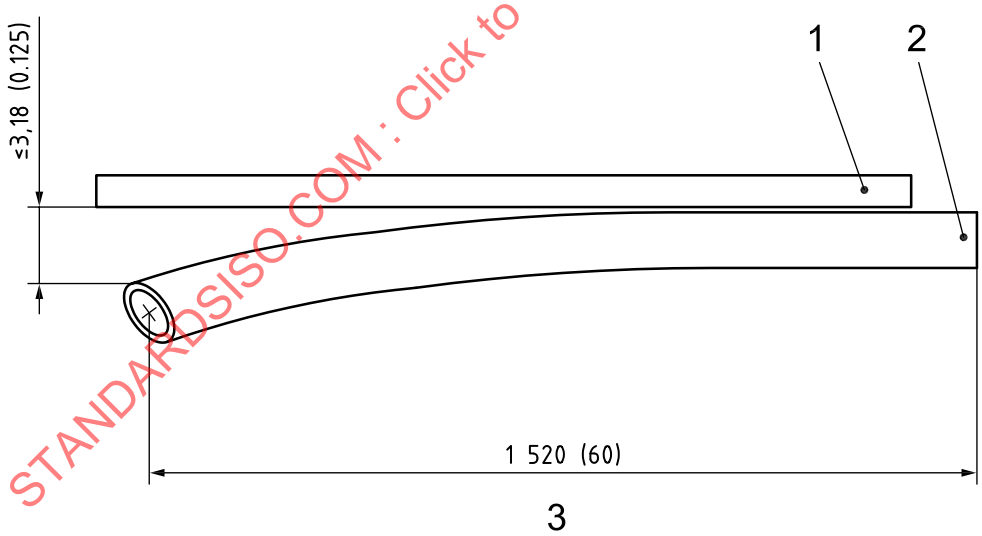

Key

1 straightedge used for measuring
2 pipe
3 hooked end

Figure B.2 — Measuring end straightness

STANDARDSISO.COM : Click to view the full PDF of ISO 13680:2010

© ISO 2010 – All rights reserved

Dimensions in millimetres (inches) unless otherwise indicated

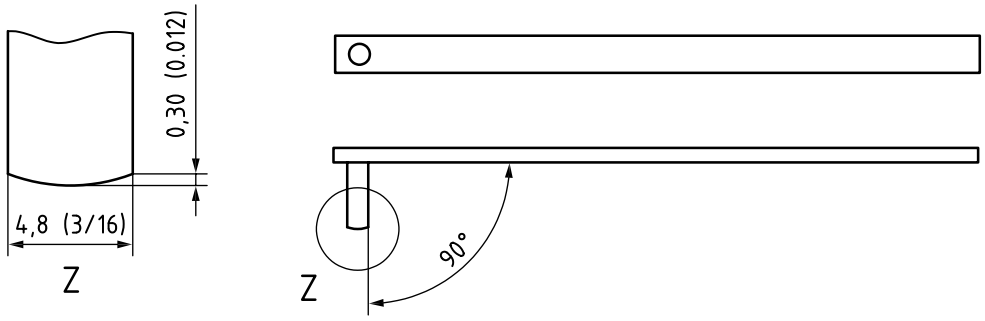

Figure B.3 — Example of a typical 90° hook-type tool

STANDARDSISO.COM : Click to view the full PDF of ISO 13680:2010

© ISO 2010 – All rights reserved

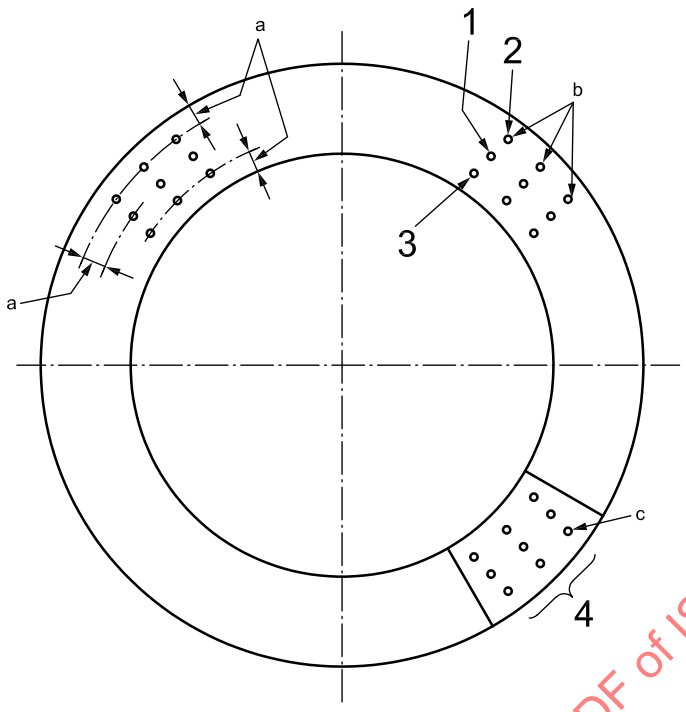

Key

1 indentation at mid-wall location
2 indentation at OD location
3 indentation at ID location
4 hardness indentation test block

[a] The outer and inner tests shall be taken between 2,54 mm (0.100 in) and 3,81 mm (0.150 in) from the applicable surface, as follows:

— for $t \leqslant$ 7,62 mm (0.300 in), one row shall be used;

— for 7,62 mm (0.300 in) < $t \leqslant$ 11,43 mm (0.450 in), two rows shall be used;

— for $t >$ 11,43 mm (0.450 in), three rows shall be used.

An error can result if an indentation is spaced closer than 2 ½ diameters from its centre to the edge of the specimen or three diameters from another indentation measured centre-to-centre.

[b] The mean hardness number is the average of three Rockwell hardness numbers in the same location.

[c] Rockwell hardness indentation data are called Rockwell hardness numbers.

NOTE Testing is required in only one quadrant. In the above figure, four quadrants are shown only to illustrate details.

Figure B.4 — Hardness test

STANDARDSISO.COM : Click to view the full PDF of ISO 13680:2010

© ISO 2010 – All rights reserved

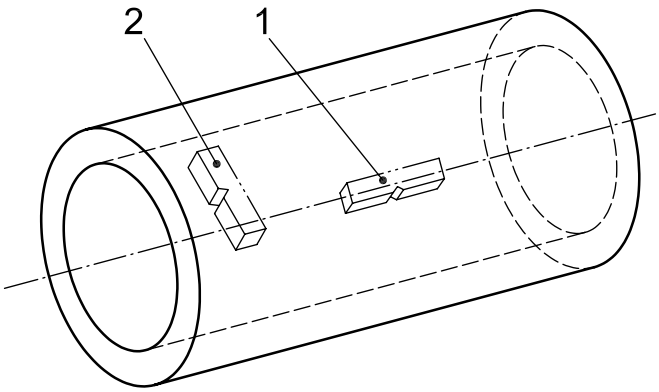

Key

1 longitudinal test piece
2 transverse test piece

Figure B.5 — Orientation of impact test pieces

Dimensions in millimetres (inches)

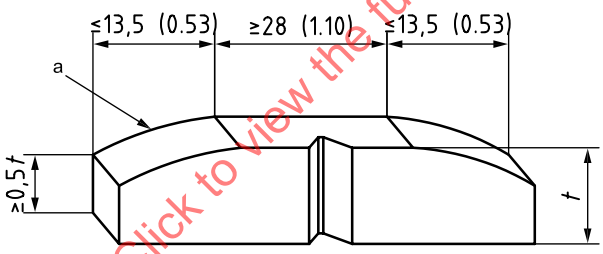

a Outside diameter curvature.

Figure B.6 — D curvature allowance on impact test transverse test piece

STANDARDSISO.COM : Click to view the full PDF of ISO 13680:2010

Dimensions in millimetres (inches)

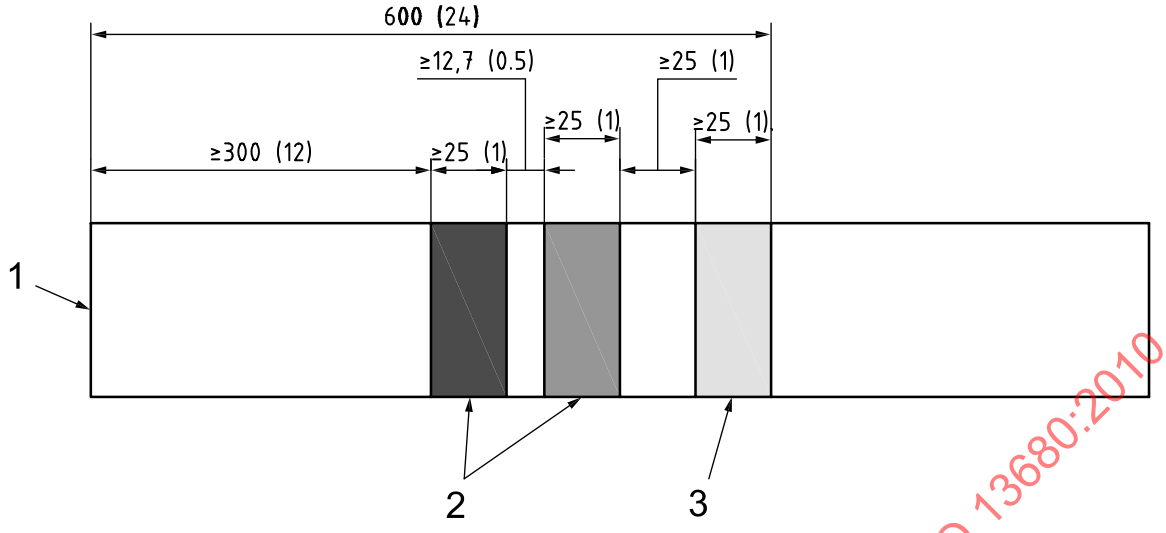

Key

1 pipe end
2 bands denoting material category
3 band denoting material grade

Figure B.7 — Position of bands for colour coding

STANDARDSISO.COM : Click to view the full PDF of ISO 13680:2010

© ISO 2010 – All rights reserved

Annex C
(normative)

Tables in USC units

Table C.1 — Products manufacturing process, starting material, products forming and heat-treatment conditions

Starting material	Products forming conditions	Heat-treatment or cold-hardened conditions	Symbol
1	2	3	4
Ingot/billet or rolled/forged bar	Hot finished — Hot-rolled/forged or — Hot-extruded	Quenched and tempered	QT
		Solution-annealed	SA
Ingot/billet or rolled/forged/machined bar	Cold-hardened[a] — Cold drawing or — Cold pilgering	Cold-hardened	CH
		Solution-annealed	SA
Hot finished hollow	Cold-hardened[a] — Cold drawing or — Cold pilgering	Cold-hardened	CH
		Solution-annealed	SA

[a] For cold-hardened products, there shall be a minimum reduction in area ratio of 3:1 between the cast ingot or billet and the last hot working or heat treatment.

STANDARDSISO.COM : Click to view the full PDF of ISO 13680:2010

© ISO 2010 – All rights reserved

Table C.2 — Generic analysis of corrosion-resistant alloy and material categories

Material			Typical analysis % mass fraction					Grade[b]						PRE[c] min. number
Group	Structure	Category[a]	C	Cr	Ni	Mo	N	65	80	95	110	125	140	
1	2	3	4	5	6	7	8	9	10	11	12	13	14	15
1	Martensitic	13-5-2	0,02	13	5	2	—	N	Y	Y	Y	N	N	NA
	Martensitic/ferritic	13-1-0	0,03	13	0,5	—	0,01	N	Y	Y	Y	N	N	NA
2	Duplex austenitic/ferritic	22-5-3	0,02	22	5	3	0,18	Y	N	N	Y	Y	Y	35
		25-7-3	0,02	25	7	3	0,18	Y	N[d]	N	Y	Y	Y	37.5
	Super-duplex austenitic/ferritic	25-7-4	0,02	25	7	3,8	0,27	N	Y	N[e]	Y	Y	Y	40
		26-6-3	0,04	25,5	4,75	2,5	1,17	N	Y	Y	Y	Y	Y	40
3	Austenitic Fe base	27-31-4	0,02	27	31	3,5	—	N	N	N	Y	Y	Y	NA
		25-32-3	0,02	25	32	3	—	N	N	N	Y	Y	Y	NA
		22-35-4	0,03	22	35,5	4,5	—	N	N	N	Y	Y	N	NA
4	Austenitic Ni base	21-42-3	0,02	21	42	3	—	N	N	N	Y	Y	N	NA
		22-50-7	0,02	22	50	7	—	N	N	N	Y	Y	Y	NA
		25-50-6	0,03	25	50	6	—	N	N	N	Y	Y	Y	NA
		20-54-9	0,01	20	54	9	Fe=17	N	N	N	Y	Y	Y	NA
		22-52-11	0,02	21,5	52	11	—	N	N	N	Y	Y	N	NA
		15-60-16	0,01	15	60	16	W=4	N	N	N	Y	Y	Y	NA

a Designation of categories:
— 1st digit: nominal chromium content;
— 2nd digit: nominal nickel content;
— 3rd digit: nominal molybdenum content.

b "Y" signifies "generally available".
"N" signifies "generally not available".

c PRE = % Cr + 3.3 (% Mo + 0,5 % W) + 16 % N
Group 2 may contain tungsten.

d A 75 grade is available.

e A 90 grade is available.

STANDARDSISO.COM : Click to view the full PDF of ISO 13680:2010

© ISO 2010 – All rights reserved

Table C.3 — Mechanical properties at room temperature

Material			Delivery condition	Yield strength $R_{p0,2}$ ksi		Tensile strength[a] R_m ksi	Elongation[b] e %	Mean hardness number HRC
Group	Category	Grade		min.	max.	min.	min.	max.
1	2	3	4	5	6	7	8	9
1	13-5-2	80	HF or QT	80	95	90	b	27
		95	HF or QT	95	110	105	b	28
		110	HF or QT	110	140	115	b	32
	13-1-0	80	HF or QT	80	95	95	b	23
		95	HF or QT	95	110	105	b	26
		110	HF or QT	110	140	120	b	32
2	22-5-3	65	SA	65	90	90	25	26
		110	CH	110	140	125	11	36
		125	CH	125	150	130	10	37
		140	CH	140	160	145	9	38
	25-7-3	75	SA	75	100	90	25	26
		110	CH	110	140	125	11	36
		125	CH	125	150	130	10	37
		140	CH	140	160	145	9	38
	25-7-4	80	SA	80	105	110	20	28
		90	SA	90	105	115	20	30
		110	CH	110	140	125	12	36
		125	CH	125	150	130	10	37
		140	CH	140	160	145	9	38
	26-6-3	80	SA	80	105	110	20	28
		90	SA	90	105	115	20	30
		110	CH	110	140	125	12	36
		125	CH	125	150	130	10	37
		140	CH	140	160	145	9	38
3	27-31-4	110	CH	110	140	115	11	35
		125	CH	125	150	130	10	37
		140	CH	140	160	145	9	38
	25-32-3	110	CH	110	140	115	11	35
		125	CH	125	150	130	10	37
		140	CH	140	160	145	9	38
	22-35-4	110	CH	110	140	115	11	35
		125	CH	125	150	130	10	37
		140	CH	140	160	145	9	38
4	21-42-3	110	CH	110	140	115	11	35
		125	CH	125	150	130	10	37
	22-50-7	110	CH	110	140	115	11	35
		125	CH	125	150	130	10	37
		140	CH	140	160	145	9	38
	25-50-6	110	CH	110	140	115	11	35
		125	CH	125	150	130	10	37
		140	CH	140	160	145	9	38
	20-54-9	110	CH	110	140	115	11	35
		125	CH	125	150	130	10	37
		140	CH	140	160	145	9	38
	22-52-11	110	CH	110	140	115	11	35
		125	CH	125	150	130	10	37
		140	CH	140	160	145	9	38
	15-60-16	110	CH	110	140	115	11	35
		125	CH	125	150	130	10	37
		140	CH	140	160	145	9	38

a See requirement in 7.2 for relation between tensile and yield strength.

b $e = 625\,000 \dfrac{A^{0,2}}{R_m^{0,9}}$

where

e is the minimum elongation in 2.0 in gauge length, expressed in percent;

A is the cross-sectional area of the tensile test specimen, expressed in square inches, based on the specified outside diameter or nominal specimen width and the specified wall thickness, rounded to the nearest 0.01 in^2, or 0.75 in^2, whichever is smaller;

R_m is the specified minimum tensile strength, expressed in thousand pounds per square inch.

STANDARDSISO.COM : Click to view the full PDF of ISO 13680:2010

© ISO 2010 – All rights reserved

Table C.4 — Allowable mean hardness number variation — All categories

Wall thickness *t* in		Allowable mean hardness number variation expressed as HRC	
⩾	<	Cold-hardened by pilger	All others
1	2	3	4
—	0.354	3	3
0.354	0.500	4	3
0.500	0.750	5	4
0.750	1.000	6	5
1.000	—	6	6

Table C.5 — Acceptable size impact specimens and absorbed-energy reduction factor

Test specimen size	Specimen dimensions mm	Absorbed energy reduction factor
1	2	3
Full size	10,0 × 10,0	1.00
¾-size	10,0 × 7,5	0.80
½-size	10,0 × 5,0	0.55

Table C.6 — Hierarchy of test specimen orientation and size

Choice	Orientation	Size
1	2	3
1st	Transverse	Full size
2nd	Transverse	¾-size
3rd	Transverse	½-size
4th	Longitudinal	Full size[a]
5th	Longitudinal	¾-size[a]
6th	Longitudinal	½-size[a]

[a] When transverse Charpy V-notch tests ½ size or greater are not possible for groups 2, 3 or 4, then flattening tests are required.

STANDARDSISO.COM : Click to view the full PDF of ISO 13680:2010

© ISO 2010 – All rights reserved

Table C.7 — Transverse impact specimen size required

Label 1	Calculated wall thickness required to machine transverse Charpy impact specimens in		
	Full size	**¾-size**	**½-size**
1	2	3	4
3-½	0.809	0.711	0.612
4	0.752	0.654	0.555
4-½	0.712	0.614	0.515
5	0.681	0.583	0.484
5-½	0.656	0.558	0.459
6-⅝	0.616	0.518	0.419
7	0.606	0.508	0.409
7-⅝	0.591	0.493	0.394
7-¾	0.588	0.490	0.391
8-⅝	0.572	0.474	0.375
9-⅝	0.557	0.459	0.360
10-¾	0.544	0.446	0.347
11-¾	0.535	0.437	0.338
13-⅜	0.522	0.424	0.325
NOTE The above provides a 0.02 in ID and a 0.02 in OD machining allowance.			

STANDARDSISO.COM : Click to view the full PDF of ISO 13680:2010

© ISO 2010 – All rights reserved

Table C.8 — Longitudinal impact specimen size required

Label 1	Calculated wall thickness required to machine longitudinal Charpy impact specimens in		
	Full size	**¾-size**	**½-size**
1	2	3	4
1.050	0.472	0.374	0.275
1.315	0.464	0.366	0.267
1.66	0.458	0.360	0.261
1.9	0.455	0.357	0.258
2.063	0.453	0.355	0.256
2-⅜	0.450	0.352	0.253
2-⅞	0.448	0.350	0.251
3-½	0.445	0.347	0.248
4	0.444	0.346	0.247
4-½	0.443	0.345	0.246
5	0.442	0.344	0.245
5-½	0.441	0.343	0.244
6-⅝	0.440	0.342	0.243
7	0.440	0.342	0.243
7-⅝	0.439	0.341	0.242
7-¾	0.439	0.341	0.242
8-⅝	0.439	0.341	0.242
9-⅝	0.438	0.340	0.241
10-¾	0.438	0.340	0.241
11-¾	0.437	0.339	0.240
13-⅜	0.437	0.339	0.240
NOTE The above provides a 0.020 in ID and a 0.020 in OD machining allowance.			

STANDARDSISO.COM : Click to view the full PDF of ISO 13680:2010

Table C.9 — Transverse Charpy absorbed-energy requirements for coupling stock, group 1

Maximum critical thickness for various grades[a] in			Minimum transverse absorbed energy ft-lb
80	**95**	**110**	
1	2	3	4
1.621	1.343	0.965	29
—	—	1.012	30

[a] For wall thickness greater than shown above, the requirements shall be according to the equations for the critical thickness and grade.

© ISO 2010 – All rights reserved

Table C.10 — Longitudinal Charpy absorbed-energy requirements for coupling stock, group 1

Maximum critical thickness for various grades[a] in			Minimum longitudinal absorbed energy ft-lb
80	**95**	**110**	
1	2	3	4
1.621	1.343	0.965	29
—	—	1.012	30

[a] For wall thickness greater than shown above, the requirements shall be according to the equations for the wall thickness and grade.

Table C.11 — Transverse Charpy absorbed-energy requirements for coupling stock, groups 2, 3 and 4

Maximum critical thickness for various grades[a] in						Minimum transverse absorbed energy ft-lb
65	**75**	**80 and 90**	**110**	**125**	**140**	
1	2	3	4	5	6	7
1.077	0.927	0.863	0.542	0.478	0.421	20
	0.993	0.926	0.589	0.521	0.462	21
	1.059	0.988	0.636	0.565	0.504	22
		1.051	0.683	0.609	0.545	23
			0.730	0.653	0.586	24
			0.777	0.697	0.627	25
			0.824	0.741	0.668	26
			0.871	0.785	0.709	27
			0.918	0.828	0.750	28
			0.965	0.872	0.791	29
			1.012	0.916	0.833	30
				0.960	0.874	31
				1.004	0.915	32
					0.956	33
					0.997	34
					1.038	35

[a] For wall thickness greater than shown above, the requirements shall be according to the equations for the wall thickness and grade.

STANDARDSISO.COM : Click to view the full PDF of ISO 13680:2010

© ISO 2010 – All rights reserved

Table C.12 — Transverse Charpy absorbed-energy requirements for pipe, group 1

Maximum critical thickness for various grades[a] in			Minimum transverse absorbed energy ft-lb
80	**95**	**110**	
1	2	3	4
2.004	1.621	1.343	29

[a] For wall thicknesses greater than shown above, the requirements shall be according to the equations for the wall thickness and grade.

Table C.13 — Longitudinal Charpy absorbed-energy requirements for pipe, group 1

Maximum specified wall thickness for various grades[a] in			Minimum longitudinal absorbed energy ft-lb
80	**95**	**110**	
1	2	3	4
2.004	1.621	1.343	29

[a] For wall thicknesses greater than shown above, the requirements shall be according to the equations for the wall thickness and grade.

Table C.14 — Transverse Charpy absorbed-energy requirements for pipe, groups 2, 3 and 4

Maximum specified wall thickness for various grades[a] in							Minimum transverse absorbed energy ft-lb
65	**75**	**80**	**90**	**110**	**125**	**140**	
1	2	3	4	5	6	7	8
1.653	1.377	1.264	1.077	0.805	0.657	0.542	20
				0.864	0.710	0.589	21
				0.924	0.763	0.636	22
				0.984	0.815	0.683	23
				1.044	0.868	0.730	24
					0.921	0.777	25
					0.973	0.824	26
					1.026	0.871	27
						0.918	28
						0.965	29
						1.012	30

[a] Wall thicknesses greater than standard pipe are shown here for information for special applications. For wall thickness greater than shown above, the requirements shall be according to the equations for the wall thickness and grade.

STANDARDSISO.COM : Click to view the full PDF of ISO 13680:2010

© ISO 2010 – All rights reserved

Table C.15 — Specified dimensions and masses of pipe

Label 1	Label 2	Outside diameter *D* in	Wall thickness *t* in	Inside diameter[a] *d* in	Drift diameter[b] in	Alternate drift diameter in	Linear mass[c] plain end lb/ft
1	2	3	4	5	6	7	8
1.050	1.14	1.050	0.113	0.824	0.730	—	1.13
1.050	1.48	1.050	0.154	0.742	0.648	—	1.48
1.315	1.70	1.315	0.133	1.049	0.955	—	1.68
1.315	2.19	1.315	0.179	0.957	0.863	—	2.17
1.660	2.09	1.660	0.125	1.410	1.316	—	2.05
1.660	2.30	1.660	0.140	1.360	1.286	—	2.27
1.660	3.03	1.660	0.191	1.278	1.184	—	3.00
1.900	2.40	1.900	0.125	1.650	1.556	—	2.37
1.900	2.75	1.900	0.145	1.610	1.516	—	2.72
1.900	3.65	1.900	0.200	1.500	1.406	—	3.63
1.900	4.42	1.900	0.250	1.400	1.306	—	4.41
1.900	5.15	1.900	0.300	1.300	1.206	—	5.13
2-⅜	4.00	2.375	0.167	2.041	1.947	—	3.94
2-⅜	4.60	2.375	0.190	1.996	1.901	—	4.44
2-⅜	5.80	2.375	0.254	1.867	1.773	—	5.76
2-⅜	6.60	2.375	0.295	1.785	1.691	—	6.56
2-⅜	7.35	2.375	0.336	1.703	1.609	—	7.32
2-⅞	6.40	2.875	0.217	2.441	2.347	—	6.17
2-⅞	7.80	2.875	0.276	2.323	2.229	—	7.67
2-⅞	8.60	2.875	0.308	2.259	2.165	—	8.54
2-⅞	9.35	2.875	0.340	2.195	2.101	—	9.21
2-⅞	10.50	2.875	0.392	2.091	1.997	—	10.40
2-⅞	11.50	2.875	0.440	1.995	1.901	—	11.45
3-½	7.70	3.500	0.216	3.068	2.943	—	7.58
3-½	9.20	3.500	0.254	2.992	2.867	—	8.81
3-½	10.20	3.500	0.289	2.922	2.797	—	9.92
3-½	12.70	3.500	0.375	2.750	2.625	—	12.53
3-½	14.30	3.500	0.430	2.640	2.515	—	14.11
3-½	15.50	3.500	0.476	2.548	2.423	—	15.39
3-½	17.00	3.500	0.530	2.440	2.315	—	16.83

STANDARDSISO.COM : Click to view the full PDF of ISO 13680:2010

© ISO 2010 – All rights reserved

Table C.15 (*continued*)

Label 1	Label 2	Outside diameter *D* in	Wall thickness *t* in	Inside diameter[a] *d* in	Drift diameter[b] in	Alternate drift diameter in	Linear mass[c] plain end lb/ft
1	2	3	4	5	6	7	8
4	9.50	4.000	0.226	3.548	3.423	—	9.12
4	10.70	4.000	0.262	3.478	3.351	—	10.47
4	13.20	4.000	0.330	3.340	3.215	—	12.95
4	16.10	4.000	0.415	3.170	3.045	—	15.90
4	18.90	4.000	0.500	3.000	2.875	—	18.71
4	22.20	4.000	0.610	2.780	2.655	—	22.11
4-½	9.50	4.500	0.205	4.090	3.965	—	9.41
4-½	10.50	4.500	0.224	4.052	3.927	—	10.24
4-½	11.60	4.500	0.250	4.000	3.875	—	11.36
4-½	12.60	4.500	0.271	3.958	3.833	—	12.25
4-½	13.50	4.500	0.290	3.920	3.795	—	13.05
4-½	15.10	4.500	0.337	3.826	3.701	—	15.00
4-½	17.00	4.500	0.380	3.740	3.615	—	16.77
4-½	18.90	4.500	0.430	3.640	3.515	—	18.71
4-½	21.50	4.500	0.500	3.500	3.375	—	21.38
4-½	23.70	4.500	0.560	3.380	3.255	—	23.59
4-½	26.10	4.500	0.630	3.240	3.115	—	26.06
5	11.50	5.000	0.220	4.560	4.435	—	11.24
5	13.00	5.000	0.253	4.494	4.369	—	12.84
5	15.00	5.000	0.296	4.408	4.283	—	14.88
5	18.00	5.000	0.362	4.276	4.151	—	17.95
5	21.40	5.000	0.437	4.126	4.001	—	21.32
5	23.30	5.000	0.478	4.044	3.919	—	23.11
5	24.10	5.000	0.500	4.000	3.875	—	24.05

STANDARDSISO.COM : Click to view the full PDF of ISO 13680:2010

© ISO 2010 – All rights reserved