INTERNATIONAL STANDARD

# ISO 13802

First edition
1999-10-15

# Plastics — Verification of pendulum impact-testing machines — Charpy, Izod and tensile impact-testing

*Plastiques — Vérification des machines d'essai de choc pendulaire — Essais de choc Charpy, Izod et choc-traction*

STANDARDSISO.COM : Click to view the full PDF of ISO 13802:1999

Reference number
ISO 13802:1999(E)

## Contents

**1 Scope** ..... 1

**2 Normative references** ..... 1

**3 Definitions** ..... 2

**4 Measurement instruments** ..... 3

**5 Verification of test machines** ..... 5

**6 Time interval between verifications** ..... 19

**7 Verification report** ..... 20

**Annex A** (informative) **Relationship between the various pendulum lengths** ..... 21

**Annex B** (informative) **Ratio of frame mass to pendulum mass** ..... 23

**Annex C** (informative) **Deceleration of pendulum during impact** ..... 25

**Annex D** (informative) **Interrelationship between the movement of the pendulum and that of the frame** ..... 27

**Annex E** (informative) **Gauge plate for verification of Charpy impact pendulums** ..... 33

STANDARDSISO.COM : Click to view the full PDF of ISO 13802:1999

© ISO 1999

All rights reserved. Unless otherwise specified, no part of this publication may be reproduced or utilized in any form or by any means, electronic or mechanical, including photocopying and microfilm, without permission in writing from the publisher.

International Organization for Standardization
Case postale 56 • CH-1211 Genève 20 • Switzerland
Internet iso@iso.ch

Printed in Switzerland

## Foreword

ISO (the International Organization for Standardization) is a worldwide federation of national standards bodies (ISO member bodies). The work of preparing International Standards is normally carried out through ISO technical committees. Each member body interested in a subject for which a technical committee has been established has the right to be represented on that committee. International organizations, governmental and non-governmental, in liaison with ISO, also take part in the work. ISO collaborates closely with the International Electrotechnical Commission (IEC) on all matters of electrotechnical standardization.

International Standards are drafted in accordance with the rules given in the ISO/IEC Directives, Part 3.

Draft International Standards adopted by the technical committees are circulated to the member bodies for voting. Publication as an International Standard requires approval by at least 75 % of the member bodies casting a vote.

International Standard ISO 13802 was prepared by Technical Committee ISO/TC 61, *Plastics*, Subcommittee SC 2, *Mechanical properties*.

Annexes A to E of this International Standard are for information only.

STANDARDSISO.COM : Click to view the full PDF of ISO 13802:1999

# Plastics — Verification of pendulum impact-testing machines — Charpy, Izod and tensile impact-testing

## 1 Scope

This International Standard specifies methods for the verification of pendulum impact-testing machines used for the Charpy impact test, Izod impact test and tensile impact test described in ISO 179-1, ISO 180 and ISO 8256, respectively.

The test machines covered by this International Standard are of the pendulum type. The impact energy $W$ (see 3.12) absorbed in impacting a test specimen is taken as being equal to the difference between the potential energy $E$ (see 3.11) of the pendulum and the energy remaining in the pendulum after impacting the specimen. The impact energy is corrected for friction and air-resistance losses (see Table 2 and 5.6).

Methods are described for verification of the geometrical and physical properties of the different parts of the test machine. The verification of some geometrical properties is difficult to perform on the assembled instrument. It is therefore assumed that the manufacturer is responsible for the verification of such properties and for providing reference planes on the instrument that enable proper verification in accordance with this International Standard.

These methods are for use when the machine is being installed, is being repaired, has been moved or is undergoing periodic checking.

This International Standard is applicable to pendulum-type impact-testing machines, of different capacities and/or designs, with the geometrical and physical properties defined in clause 5.

A pendulum impact-testing machine verified in accordance with this International Standard, and assessed as satisfactory, is considered suitable for impact testing with unnotched and notched test specimens of different types.

Annex A describes the relationships between the various characteristic pendulum lengths, the potential energy and the moment of inertia of the pendulum.

Annex B explains how to calculate the ratio of frame mass to pendulum mass required to avoid errors in the impact energy.

Annex C describes, for Charpy impact testing, the changes in pendulum velocity just after impact as a function of impact energy and gives the ranges of impact energies for the measurement of which pendulums of specified capacity have to be used.

Annex D discusses the stiffness of the base of the frame necessary to avoid resonant oscillations in the frame due to reaction forces caused by the moving pendulum.

Annex E gives the dimensions of a gauge plate suitable for the verification of Charpy impact-testing machines.

## 2 Normative references

The following normative documents contain provisions which, through reference in this text, constitute provisions of this International Standard. For dated references, subsequent amendments to, or revisions of, any of these publications do not apply. However, parties to agreements based on this International Standard are encouraged to investigate the possibility of applying the most recent editions of the normative documents indicated below. For undated references,

STANDARDSISO.COM : Click to view the full PDF of ISO 13802:1999

the latest edition of the normative document referred to applies. Members of ISO and IEC maintain registers of currently valid International Standards.

ISO 179-1:—[1], *Plastics — Determination of Charpy impact properties — Part 1: Non-instrumented impact test.*

ISO 179-2:1997, *Plastics — Determination of Charpy impact properties — Part 2: Instrumented impact test.*

ISO 180:—[2], *Plastics — Determination of Izod impact strength.*

ISO 8256:1990, *Plastics — Determination of tensile-impact strength.*

## 3 Definitions

For the purposes of this International Standard, the following definitions apply.

**3.1**
**verification**
proof, with the use of calibrated standards or standard reference materials, that the calibration of an instrument is acceptable

**3.2**
**calibration**
set of operations that establish, under specified conditions, the relationship between values indicated by a measuring instrument or measuring system and values corresponding to appropriate standards or known values derived from standards

**3.3**
**period of oscillation of the pendulum**
$T_P$
period, expressed in seconds, of a single complete oscillation (to and fro) of the pendulum, oscillating at angles of oscillation of less that 5° to each side of the vertical

**3.4**
**centre of percussion**
point on a pendulum at which a perpendicular impact in the plane of swing does not cause reaction forces at the axis of rotation of the pendulum

**3.5**
**pendulum length**
$L_P$
distance, expressed in metres, between the axis of rotation of the pendulum and the centre of percussion (3.4); it is the length of an equivalent theoretical pendulum mass concentrated at the point which gives the same period of oscillation with its $T_P$ (3.3) as the actual pendulum

**3.6**
**gravity length**
$L_M$
distance, expressed in metres, between the axis of rotation of the pendulum and the centre of gravity of the pendulum

**3.7**
**gyration length**
$L_G$
distance, expressed in metres, between the axis of rotation of the pendulum and the point at which the pendulum mass $m_P$ would have to be concentrated to give the same moment of inertia as the pendulum

---

[1] To be published. (Revision of ISO 179:1993)

[2] To be published. (Revision of ISO 180:1993)

STANDARDSISO.COM : Click to view the full PDF of ISO 13802:1999

**3.8**
**impact length**
$L_I$
distance, expressed in metres, between the axis of the rotation of the pendulum and the point of impact of the striking edge at the centre of the specimen face

**3.9**
**starting angle**
$\alpha_0$
angle, expressed in degrees, relative to the vertical, from which the pendulum is released

NOTE Usually the test specimen is impacted at the lowest point of the pendulum swing ($\alpha_I$ = 0°). In this case, the starting angle will also be the angle of fall [see Figure 1b)].

**3.10**
**impact velocity**
$v_I$
velocity, expressed in metres per second, of the pendulum at the moment of impact

**3.11**
**potential energy**
$E$
potential energy, expressed in joules, of the pendulum in its starting position, relative to its position at impact

**3.12**
**impact energy**
$W$
energy, expressed in joules, required to deform, break and push away the test specimen

**3.13**
**frame**
that part of the machine carrying the pendulum bearings, the supports, the vice and/or clamps, the measurement instruments and the mechanism for holding and releasing the pendulum; the mass of the frame, $m_F$, is expressed in kilograms

**3.14**
**period of oscillation of the frame**
$T_F$
period, expressed in seconds, of the freely decaying, horizontal oscillation of the frame; it characterizes the oscillation of the frame vibrating against the stiffness of the (resilient) mounting, e.g. a test bench and/or its foundation (which may include damping material for instance) (see annex D)

**3.15**
**mass of the pendulum**
$m_{P,max}$
mass, expressed in kilograms, of the heaviest pendulum used

STANDARDSISO.COM : Click to view the full PDF of ISO 13802:1999

## 4 Measurement instruments

The verification methods described in this International Standard call for the use of straight edges, vernier calipers, set squares, levels and dynamometers, load cells or scales and timing devices to check if the geometrical and physical properties of the components of the test machine conform to the requirements given in this International Standard.

These measurement instruments shall be accurate enough to measure the parameters within the tolerance limits given in clause 5.

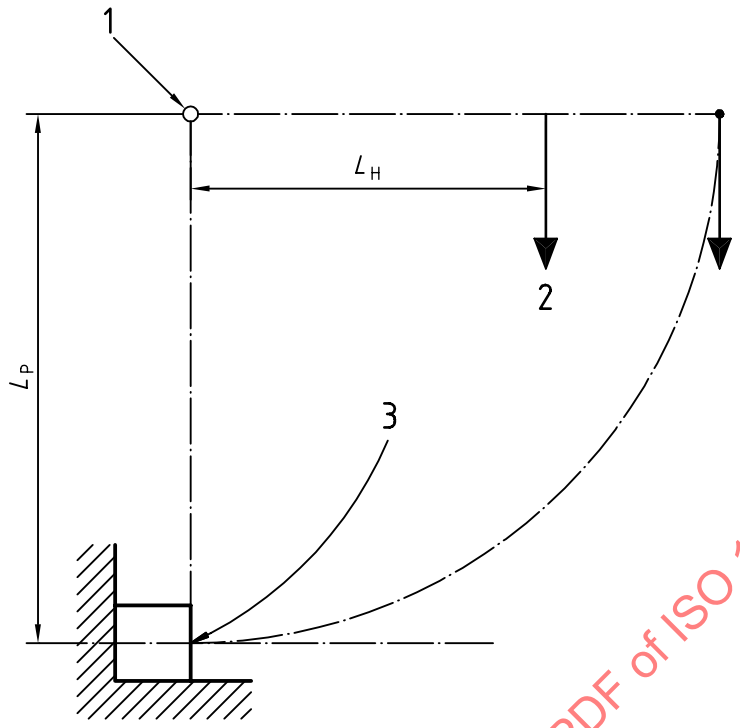


**a) Quantities necessary to determine the horizontal moment**

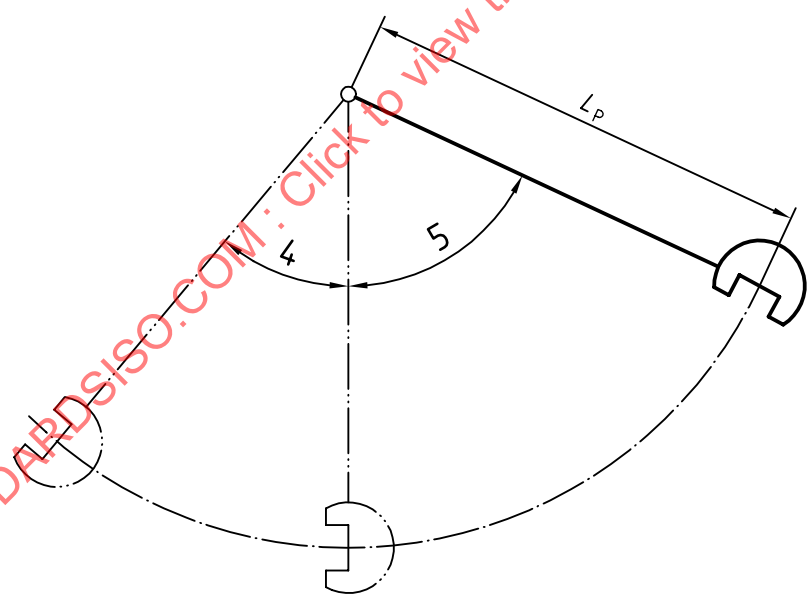


**b) Quantities necessary for scale calibration and for potential-energy calculations**

STANDARDSISO.COM : Click to view the full PDF of ISO 13802:1999

**Key**

1 Axis of rotation
2 Vertical force, $F_H$
3 Centre of percussion
4 Angle of rise, $\alpha_R$
5 Starting angle, $\alpha_0$

**Figure 1 — Quantities necessary for energy verification**

# 5 Verification of test machines

## 5.1 Components of test machines

The essential components are as follows:

### 5.1.1 Pendulum

**5.1.1.1 Pendulum rod**.

**5.1.1.2 Striker,** with striking edge for bending impact tests (see ISO 179 and ISO 180) or with striking surfaces or clamps for tensile impact testing (see ISO 8256:1990, test methods A and B respectively).

### 5.1.2 Frame

**5.1.2.1 Test specimen supports**, for Charpy impact testing (see ISO 179);

**5.1.2.2 Vice,** for Izod impact testing (see ISO 180);

**5.1.2.3 Clamps or stops,** for tensile impact testing (see ISO 8256, methods A and B);

**5.1.2.4 Mechanism for holding and releasing the pendulum**.

### 5.1.3 Energy indicating device

### 5.1.4 Crossheads for tensile impact testing

## 5.2 Pendulum

### 5.2.1 Pendulum length, $L_P$

Determine the pendulum length $L_P$ from the period of oscillation $T_P$ of the pendulum using the equation

$$L_P = \frac{g T_P^2}{4\pi^2} \tag{1}$$

where

$g$ is the local acceleration due to gravity, in metres per second squared;

$T_P$ is the period of oscillation of the pendulum, in seconds.

The value of $T_P$ shall be determined to a precision of 0,2 %.

Determine the period of oscillation $T_P$ as the mean value of four determinations, of total duration $n \cdot T_P$, of $n$ consecutive oscillations to an accuracy of 0,1 s. Together with the precision demanded above of $L_P$, this results in a minimum number $n$ of oscillation given by $n \geqslant 100/T_P$.

The use of a timing device accurate to better than 0,1 s allows the number of oscillations to be reduced accordingly (see Table 1).

STANDARDSISO.COM : Click to view the full PDF of ISO 13802:1999

**Table 1 — Examples of minimum number of oscillations for determination of $T_P$**

| $L_P$<br>m | $T_P$<br>s | Accuracy of time measurement<br>s | Minimum number of oscillations<br>$n$ |
|---|---|---|---|
| 0,225 | 0,95 | 0,1<br>0,01 | 105<br>11 |
| 0,390 | 1,25 | 0,1<br>0,01 | 80<br>8 |

### 5.2.2 Impact length, $L_I$

The impact length $L_I$ (3.8) shall be within 1 % of the pendulum length $L_P$, as determined from the period of oscillation $T_P$ of the pendulum [see equation (1) and Figure 1a)].

### 5.2.3 Potential energy, $E$

The potential energy $E$ shall not differ by more than ± 1 % from the nominal value given in the first column of Table 2.

Determine the potential energy by the following procedure, or by any other method capable of determining the initial potential energy of the pendulum to within the precision specified above.

a) Support the pendulum at an arbitrary length $L_H$ from the axis of rotation, on a balance or dynamometer. Ensure that the line from the axis of rotation to the centre of gravity of the pendulum is horizontal [see Figure 1a)].

b) Measure the vertical force $F_H$, in newtons, at $L_H$ and the length $L_H$, in metres, to a precision of ± 0,2 %.

c) Calculate the horizontal moment $M_H$ of the pendulum about the axis of rotation, in newton metres, using the equation:

$$M_H = F_H L_H \tag{2}$$

d) Measure the starting angle $\alpha_0$ [see Figure 1b)] to a precision $\Delta\alpha_0$ which corresponds to a relative precision of 1/400th of the potential energy $E$ and, if applicable, the impact angle $\alpha_I$ to within 0,25°. Thus, for starting angles of 140°, 150° and 160°, $\Delta\alpha_0$ is 0,39°, 0,54° and 0,81°, respectively.

e) Calculate the potential energy $E$ of the pendulum from the equation:

$$E = M_H(\cos\alpha_I - \cos\alpha_0) \tag{3}$$

where

$E$ is the potential energy of the pendulum, in joules;

$M_H$ is the horizontal moment of the pendulum [see equation (2)], in newton metres;

$\alpha_0$ is the starting angle, in degrees;

$\alpha_I$ is the impact angle, in degrees.

NOTE 1 Most pendulum impact-testing machines use an impact angle of 0°, for which $\cos\alpha_I = 1$.

NOTE 2 In certain cases, it may be necessary to remove the pendulum from the machine to determine its moment $M_H$ by the method described.

STANDARDSISO.COM : Click to view the full PDF of ISO 13802:1999

**Table 2 — Basic characteristics of Charpy, tensile and Izod impact-testing machines**

| Potential energy<br>$E$<br>J | Type of test | Impact velocity<br>$v_I$<br>m/s | Maximum permissible losses due to friction without test specimen<br>% of $E$ |
|---|---|---|---|
| 0,5 | Charpy | | 4 |
| 1,0 | Charpy | | 2 |
| 2,0 | Tensile | 2,9 ( ± 10 %) | 1 |
| 4,0 | Tensile | | 0,5 |
| 5,0 | Charpy | | 0,5 |
| 7,5 | Tensile | | |
| 15 | Tensile | 3,8 ( ± 10 %) | |
| 25 | Tensile | | 0,5 |
| 50 | Tensile | | |
| 1,0 | Izod | | 2 |
| 2,75 | Izod | | 1 |
| 5,5 | Izod | 3,5 ( ± 10 %) | 0,5 |
| 11 | Izod | | 0,5 |
| 22 | Izod | | 0,5 |

### 5.2.4 Impact velocity, $v_I$

#### 5.2.4.1 Value

The impact velocity $v_I$ shall have the value given in Table 2 for Charpy, Izod and tensile impact testing, respectively.

#### 5.2.4.2 Determination

Determine the impact velocity using the equation:

$$v_I = \sqrt{2gL_I(\cos\alpha_I - \cos\alpha_0)} \tag{4}$$

where

$v_I$ is the impact velocity, in metres per second;

$g$ is the local acceleration due to gravity, in metres per second squared;

$L_I$ is the impact length (see 5.2.2), in metres;

$\alpha_0$ is the starting angle, in degrees;

$\alpha_I$ is the impact angle, in degrees (see note 1 to 5.2.3).

### 5.2.5 Types of pendulum impact-testing machine

Three different types of test machine are covered by this International Standard.

Figure 2 shows a typical example of a Charpy test machine. Important values to be verified are listed in Table 3.

Figure 3 shows a typical example of an Izod test machine. Important values to be verified are listed in Table 4.

Figures 4 and 5 show typical examples of tensile impact-testing machines. Important values to be verified are listed in Table 5.

There are several pendulum designs available, and they are acceptable if they meet the requirements of this International Standard.

STANDARDSISO.COM : Click to view the full PDF of ISO 13802:1999

**Table 3 — Properties of Charpy machines**

| Parameter | Symbol used in Figure 2 | Unit | Value |
|---|---|---|---|
| **Pendulum** | | | |
| Angle of striker tip | $\theta_1$ | degrees | 30 ± 1 |
| Radius of striking edge | $R_1$ | mm | 2 ± 0,5 |
| **Frame/pendulum position** | | | |
| Parallelism between long axis of test specimen and reference plane (if present) | $p_1$ | — | ± 4/1 000 |
| Distance between striking edge and centre of gravity of striker | | | |
| Position of midplane between supports, relative to striking edge | $D_1$ | mm | ± 0,5 |
| | $D_2$ | mm | ± 0,5 |
| **Test specimen supports** | | | |
| Radius of curvature of supports | $R_2$ | mm | 1 ± 0,1 |
| Angle of taper of supports | $\theta_2$ | degrees | 10 ± 1 |
| Angle of slope of supports | $\theta_3$ | degrees | 5 ± 1 |
| Angle of supports | $\theta_4$ | degrees | 90 ± 0,1 |

**Table 4 — Properties of Izod machines**

| Parameter | Symbol used in Figure 3 | Unit | Value |
|---|---|---|---|
| **Striking edge** | | | |
| Radius | $R_1$ | mm | 0,8 ± 0,2 |
| Angle relative to long axis of test specimen | $\theta_1$ | degrees | 90 ± 2 |
| Parallelism with face of test specimen (over full width) | $p_1$ | mm | ± 0,025 |
| **Frame/pendulum position** | | | |
| Horizontality of top surface of vice | $p_2$ | — | ± 3/1 000 |
| Angle between locating groove and top surface of vice | $\theta_2$ | degrees | 90 ± 0,5 |
| Location of striking edge above top surface of support | $D_1$ | mm | 22 ± 0,2 |
| **Vice faces** | | | |
| Parallelism in horizontal and vertical direction | $p_3$ | mm | ± 0,025 |
| Radius of top edge of support about which bending takes place | $R_2$ | mm | 0,2 ± 0,1 |

**Table 5 — Properties of tensile impact machines**

| Parameter | Symbol used in Figures 4 and 5 | Unit | Value |
|---|---|---|---|
| **Pendulum** | | | |
| Parallelism of striker/anvil faces with crosshead face | $p_1$ | — | ± 4/1 000 |
| Angle between striker/anvil faces and plane of swing | $p_2$ | degrees | 90 ± 1 |
| Symmetry of striker/anvil faces with respect to plane of swing | $S_1$ | mm | ± 0,5 |
| **Test specimen position** | | | |
| Symmetry with respect to plane of swing | $S_2$ | mm | ± 0,5 |
| Angle relative to plane of swing | $p_3$ | degrees | ± 0,2 |
| **Crossheads** | | | |
| For mass of crosshead, see ISO 8256:1990, Table 1 | | | |

NOTE The properties of pendulum impact-testing machines which depend on the test specimen position can only be measured using metallic gauge specimens which are exactly rectangular. Injection-moulded specimens are not suitable due to their draft angles.

STANDARDSISO.COM : Click to view the full PDF of ISO 13802:1999

Dimensions in millimetres

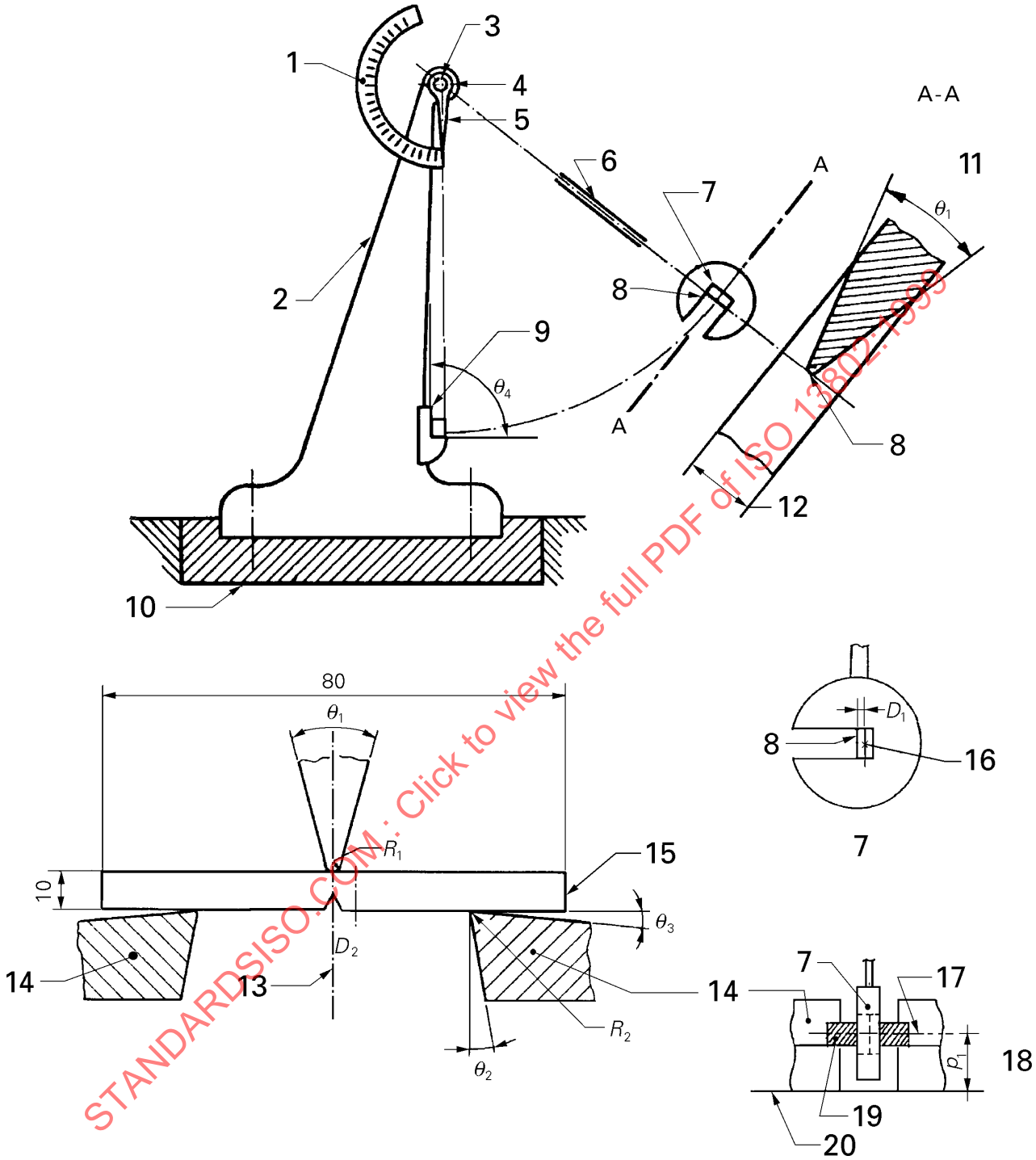


STANDARDSISO.COM : Click to view the full PDF of ISO 13802:1999

**Key**

1 Scale
2 Machine frame
3 Axis of rotation
4 Pendulum bearings
5 Friction pointer
6 Pendulum rod
7 Striker
8 Striking edge
9 Test specimen supports
10 Foundation
11 Included angle of striker, $\theta_1$
12 Width of striker
13 Plane of symmetry of supports
14 Support
15 Standard test specimen
16 Centre of gravity of striker
17 Axis of test specimen
18 Parallelism, $p_1$
19 Test specimen
20 Reference plane

**Figure 2 — Details of Charpy test machine** (for dimensions, see Table 3)

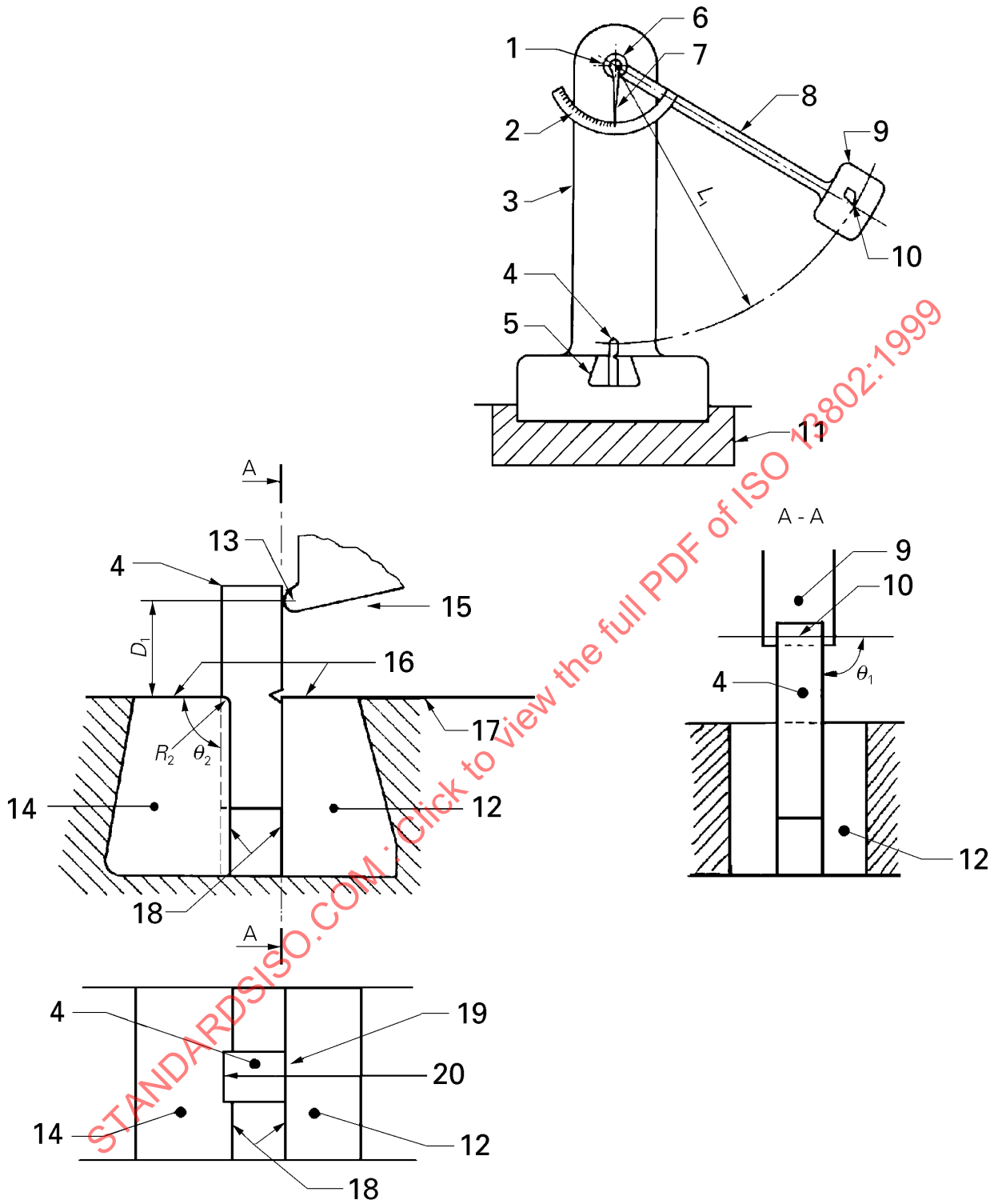


STANDARDSISO.COM : Click to view the full PDF of ISO 13802:1999

**Key**

1 Pendulum bearings
2 Scale
3 Frame
4 Test specimen
5 Test specimen supports
6 Axis of rotation
7 Friction pointer
8 Pendulum arm
9 Striker
10 Striking edge
11 Foundation
12 Clamping block
13 Radius of curvature of striking edge
14 Support block
15 Direction of impact
16 Top surface of vice
17 Horizontality, $p_2$
18 Parallelism, $p_3$
19 Parallelism, $p_1$
20 Locating groove

NOTE The support and clamping block together form a vice.

**Figure 3 — Details of the Izod-test device** (for dimensions, see Table 4)

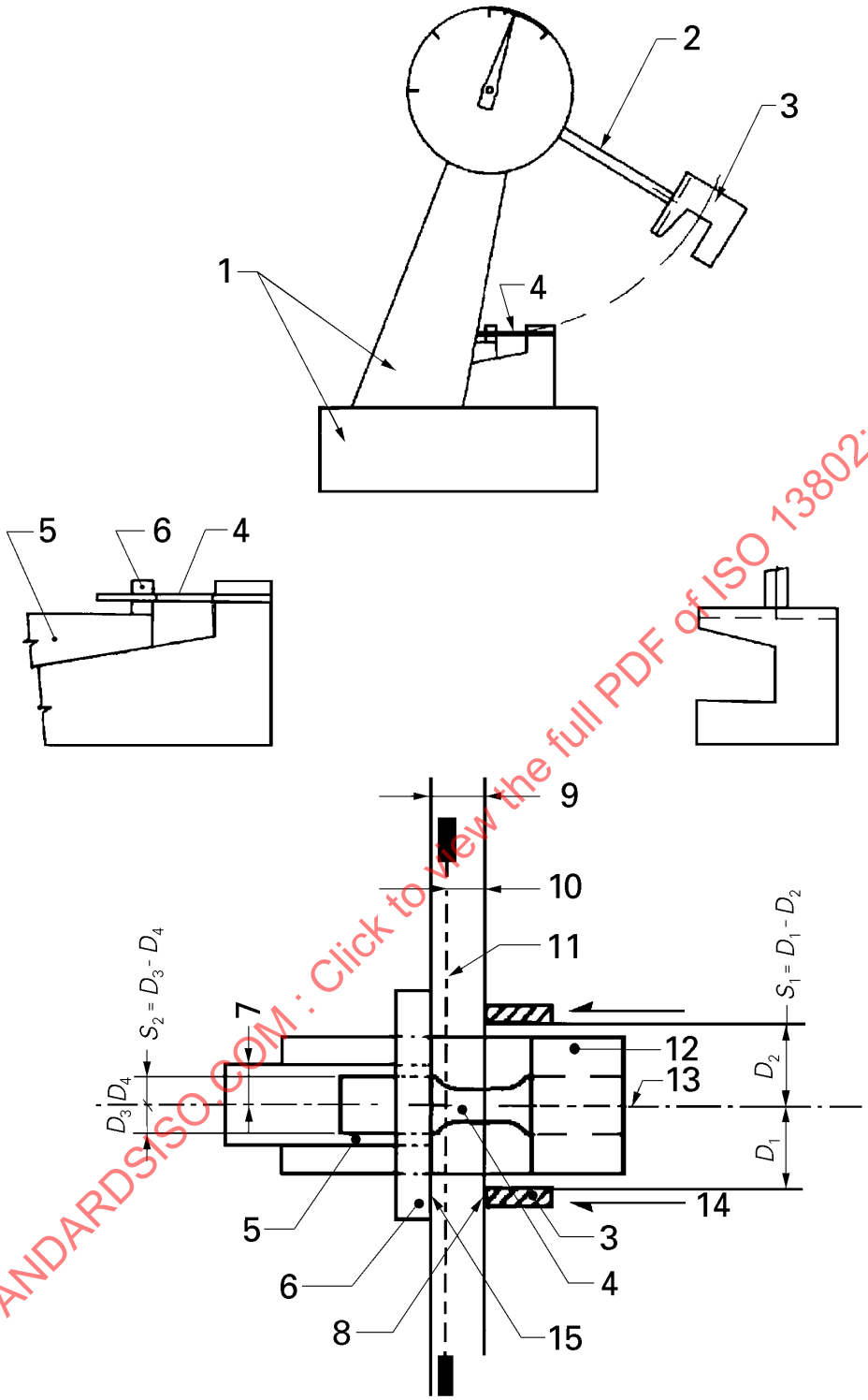


STANDARDSISO.COM : Click to view the full PDF of ISO 13802:1999

**Key**

| | | |
|---|---|---|
| 1 Frame | 6 Crosshead | 11 Axis of rotation |
| 2 Pendulum rod | 7 Coplanarity, $p_3$ | 12 Vice jaw |
| 3 Striker | 8 Striker face | 13 Plane of swing |
| 4 Test specimen | 9 Parallelism, $p_1$ | 14 Direction of blow |
| 5 Support for crosshead | 10 Parallelism, $p_2$ | 15 Crosshead face |

**Figure 4 — Diagrams showing relationship of pendulum to test specimen clamps in tensile impact test machines for use in method A of ISO 8256:1990** (for dimensions, see Table 5)

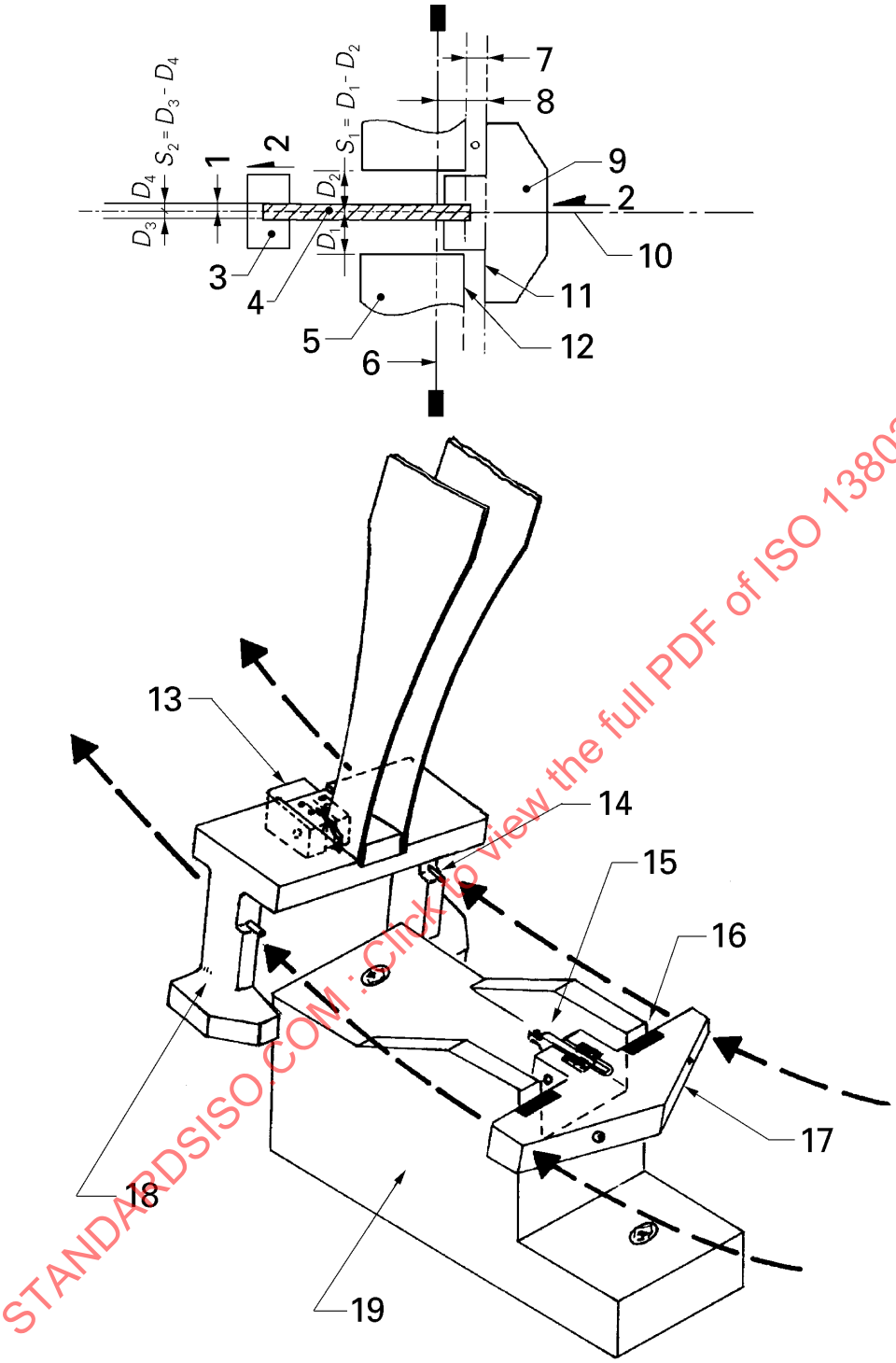


STANDARDSISO.COM : Click to view the full PDF of ISO 13802:1999

**Key**

1 Coplanarity, $p_3$
2 Direction of blow
3 Pendulum head
4 Test specimen
5 Anvil
6 Axis of rotation
7 Parallelism, $p_1$
8 Parallelism, $p_2$
9 Crosshead clamp
10 Plane of swing
11 Crosshead face
12 Anvil face
13 Unsecured specimen clamp
14 Pin for other devices for holding unsecured crosshead during downward travel
15 Broken specimen
16 Hardened striker pad (if necessary to prevent permanent deformation)
17 Unsecured crosshead/specimen clamp
18 Pendulum head
19 Base

**Figure 5 — Diagrams showing relationship of pendulum to test specimen clamps after test specimen rupture, for tensile impact test machines for use in method B of ISO 8256:1990** (for dimensions, see Table 5)

## 5.3 Basic properties of the frame

### 5.3.1 Construction

The frame shall be of rigid construction (see Table 6). Pendulum impact machines designed for use with this International Standard shall have the rotation shaft (upper part) free of obstructions to allow a direct level check using a proper level on the reference plane (see 5.3.2). The centre of gravity of the frame shall be at the same height as the centre of percussion of the pendulum at impact and in the plane of swing of the pendulum.

**Table 6 — General characteristics of frame**

| Parameter | Unit | Value |
|---|---|---|
| Horizontality of axis of rotation of pendulum | | |
| a) Machine with reference plane[1)] | — | ± 2/1 000 relative to the reference plane |
| b) Machine without reference plane | — | ± 4/1 000 |
| Longitudinal play of bearings | mm | 0,25 |
| Radial play of bearings | mm | 0,05 |
| 1) To be certified by the manufacturer. | | |

### 5.3.2 Levelling the frame

The frame shall be installed so that the reference plane is horizontal to within 2/1 000 and so that the axis of rotation is either horizontal to within 4/1 000 or parallel to the reference plane to within 2/1 000. In order to maintain the frame in position and the stiffness of the mounting (see 5.3.3), the adjustment screws shall be fixed after levelling.

### 5.3.3 Mass of frame and pendulum and stiffness of mounting

After an impact on a test specimen for which the work to break is greater than the potential energy of the pendulum, there shall be no visible displacement of the frame on the test bench.

Unless the ratio $m_F/m_{P,max}$ of the mass of the frame to the mass of the heaviest pendulum used is at least 40, the frame shall be fixed to a rigid test bench.

The minimum value of the ratio $m_F/m_{P,max}$ of the mass of the frame to the mass of the heaviest pendulum used depends on the maximum relative impact energy $W_{max}/E_{max}$ measured (see Table 7 and annex B).

**Table 7 — Minimum ratio of mass of frame to mass of pendulum as a function of maximum relative impact energy $W_{max}/E_{max}$ measured, allowing a relative-energy error $\Delta W/E_{max}$ of, at the most, 0,5 %**

| $W_{max}/E_{max}$, in percent | 40 | 50 | 60 | 70 | 80 |
|---|---|---|---|---|---|
| $m_F/m_{P,max}$ | 10 | 18 | 28 | 42 | 62 |

NOTE 1 It is recommended that a mass ratio $m_F/m_{P,max}$ of 40 is used, which is suitable for the measurement of impact energies which are up to 70 % of the potential energy of the heaviest pendulum, e.g. $W_{max} \leqslant 35$ J for $E_{max} = 50$ J.

In order to avoid resonant transmission of energy from the pendulum to the frame during a single swing without a test specimen, the period of oscillation of the frame $T_F$ shall satisfy the following inequality (see also annex D):

$$T_F \leqslant T_P/7 \qquad (5)$$

where

$T_F$ is the period of oscillation of the frame, in seconds;

$T_P$ is the period of oscillation of the pendulum, in seconds.

STANDARDSISO.COM : Click to view the full PDF of ISO 13802:1999

NOTE 2 Commonly used pendulums have periods of oscillation $T_P$ between 0,9 s and 1,3 s. Their frames, therefore, have to have a sufficiently stiff mounting for their period of oscillation $T_F$ to be less than 0,13 s and 0,19 s, respectively.

The stiffness of the mounting $S_F$ shall satisfy the following inequality:

$$S_F \geqslant \frac{4\pi^2 m_F}{T_F^2} \tag{6}$$

Using the recommended mass ratio $m_F/m_{P,max}$ of 40 and combining inequality (5) with inequality (6) gives

$$S_F \geqslant \frac{7{,}7 \times 10^4 \times m_{P,max}}{T_P^2} \tag{7}$$

where

$S_F$ is the stiffness of the mounting, in newtons per metre;

$m_{P,max}$ is the mass of the heaviest pendulum, in kilograms;

$T_P$ is the period of oscillation of the pendulum, in seconds.

NOTE 3 The stiffness of the mounting $S_F$ may be determined, for instance, from the displacement $s$ caused by a known horizontal force $F_F$ ($S_F = F_F/s$) acting on the frame in the direction of impact (see Figure D.3). Alternatively, the period of oscillation of the frame $T_F$ may be deduced from the resonant vibration excited by an impulse acting in the direction of impact and monitored by a suitable recording device.

## 5.4 Bearing

The end play in the axial direction in the bearings (see Table 6) of the pendulum spindle shall not exceed 0,25 mm, and the total play in the radial direction shall not exceed 0,05 mm.

The radial play can be measured, for example, by a dial gauge mounted on the frame close to the bearing housing in order to indicate movement in the bearings at the end of the spindle when a force is applied to the pendulum perpendicularly to the plane of swing. It is recommended that this perpendicular force is of the same order of magnitude as the weight of the heaviest pendulum used.

## 5.5 Energy indicator

### 5.5.1 Types of scale

The machine may be graduated either in angle of rise $\alpha_R$ [see Figure 1b)] or in impact energy $W$ absorbed, the two being related by the equation

$$W = M_H(\cos\alpha_R - \cos\alpha_0) \tag{8}$$

where

$W$ is the impact energy, in joules;

$M_H$ is the horizontal moment of the pendulum, as given by equation (2), in newton metres;

$\alpha_0$ is the starting angle, expressed in degrees;

$\alpha_R$ is the angle of rise, in degrees.

NOTE It may be useful to have the scale graduated both in joules of absorbed energy and in degrees. Also, for the installation and calibration of the machine and the measurement of friction losses, it is useful to be able to change the starting angle.

STANDARDSISO.COM : Click to view the full PDF of ISO 13802:1999

### 5.5.2 Scale resolution

The resolution $\Delta W$ of the scale for the impact energy $W$, which may be analogue or digital, shall be at least 1/400th of the potential energy $E$, corresponding to the resolution $\Delta\alpha_R$ of the angle of rise $\alpha_R$, as given, in degrees, by the equation

$$\Delta\alpha_R = \frac{180(1-\cos\alpha_0)}{\pi(400\sin\alpha_R)} \tag{9}$$

NOTE For a starting angle $\alpha_0$ of e.g. 145°, $\Delta\alpha_R$ = 0,26° at the most critical range near $\alpha_R$ = 90°. The values of the resolutions $\Delta W$ and $\Delta\alpha_R$ indicated above include uncertainties influencing the readings like parallax and/or thickness of the pointer and fluctuations of digital scales.

### 5.5.3 Calibration of energy/angle of rise scale

The graduation marks on the scale, corresponding to approximately 10 %, 20 %, 30 %, 50 % and 70 % of the range of the scale shall be checked as follows, measuring angle of rise to the precision specified in 5.5.2:

a) Operate the machine normally, but without a test specimen in position, and obtain a zero reading ($W_{S,1}$) as indicated by the pointer. Record this reading, which shall not exceed ± 2,5 % of the potential energy $E$.

b) Support the pendulum so that the zero reading ($W_{S,1}$) is indicated by the pointer and measure the corresponding angle of rise $\alpha_{R,1}$.

c) Support the pendulum so that the mark for each of the above calibration positions is indicated by the pointer, and measure the corresponding angle of rise $\alpha_{R,I}$ for each position.

d) Calculate the absorbed energy $W_I$ using the following equation:

$$W_I = M_H(\cos\alpha_{R,I} - \cos\alpha_{R,1}) \tag{10}$$

NOTE The precision specified for $L_I$ and $F_H$ (see 5.2.3) and for $\alpha_{R,1}$ and $\alpha_{R,I}$ enables $W_I$ to be determined to a precision of approximately 0,3 % of full-scale deflection.

e) Repeat steps a) to d) twice.

f) Calculate the mean of the three determinations. The difference between the individual values and their mean shall not exceed 1 % of the energy corresponding to the indicated value or 1 % of the full-scale value, whichever is the greater.

## 5.6 Losses due to friction

### 5.6.1 Types of loss

Energy is absorbed by friction, including in the pointer (if the machine has one) or in electronic angular-displacement transducers, air resistance and friction in the pendulum bearings.

### 5.6.2 Determination of the loss due to friction in the pointer

If the machine has a pointer, determine the loss due to friction in the pointer $W_{f,P}$ using the following procedure:

a) Operate the machine normally, but without a test specimen, to obtain a first reading $W_{f,1}$.

b) Without resetting the pointer, again release the pendulum from the initial position and obtain a second reading $W_{f,2}$.

c) Repeat steps a) and b) twice.

d) Calculate the means of the three determination of $W_{f,1}$ and $W_{f,2}$.

STANDARDSISO.COM : Click to view the full PDF of ISO 13802:1999

e) Calculate the loss due to friction in the pointer $W_{f,P}$ for one swing by subtracting the mean of the second readings $W_{f,2}$ from the mean of the first readings $W_{f,1}$, i.e.

$$W_{f,P} = W_{f,1} - W_{f,2} \tag{11}$$

### 5.6.3 Determination of losses due to air resistance and friction in the pendulum bearings

Determine the losses due to air resistance and friction in the pendulum bearings using the following procedure:

a) If the machine has a pointer, operate the machine as described in 5.6.2 to obtain a reading $W_{f,2}$. Allow the pendulum to continue to swing freely. At the beginning of the tenth forward swing after measuring $W_{f,2}$, reposition the pointer so that, on completion of this swing, it is driven only a few divisions along the scale. Record the reading $W_{f,3}$.

b) Repeat step a) twice.

c) Calculate the means of the three determinations of $W_{f,2}$ and $W_{f,3}$.

d) Calculate the energy lost due to air resistance and pendulum bearing friction $W_{f,AB}$ for one swing using the equation

$$W_{f,AB} = \frac{W_{f,3} - W_{f,2}}{20} \tag{12}$$

NOTE Electronic angular-displacement transducers are frequently used to measure pendulum motion. These devices are either frictionless optoelectronic devices or their frictional losses are included in $W_{f,AB}$.

### 5.6.4 Calculation of the total energy lost due to friction

Calculate the total energy lost due to friction $W_f$ using the equation:

$$W_f = \frac{1}{2}\left[W_{f,AB} + \frac{\alpha_R}{\alpha_0}\left(W_{f,AB} + 2W_{f,P}\right)\right] \tag{13}$$

### 5.6.5 Maximum permissible losses due to friction

The total losses due to friction for one swing shall not exceed the applicable value(s) given in Table 2.

The total energy lost $W_f$ calculated from equation (13), shall be subtracted from the impact energy measured with a test specimen, but only in cases when $W_f$ exceeds 0,5 % of the potential energy $E$, i.e. only for pendulums with a potential energy less than 4 J (see Table 2).

## 5.7 Test specimen supports, clamps and crossheads

### 5.7.1 Supports in Charpy test machines

The test specimen supports in Charpy machines (see Figure 2) shall conform to all of the following requirements:

#### 5.7.1.1 Arrangement of supports

The test specimen supports shall be located one on each side of the plane of swing of the pendulum and shall each consist of two mutually perpendicular surfaces normal to the plane of swing of the pendulum. Essentially, one of these two surfaces supports the specimen and the other takes the reaction from the impact on the specimen. The corresponding surfaces on each of the two supports shall be coplanar.

A recess shall be provided at the junction between the two surfaces, to accommodate flash along one edge of the specimen, for instance.

STANDARDSISO.COM : Click to view the full PDF of ISO 13802:1999

#### 5.7.1.2 Orientation of supports

When a specimen measuring (80 mm ± 0,2 mm) × (10 mm ± 0,2 mm) × (4 mm ± 0,2 mm) is used, the supports shall conform to the following requirements:

a) the long axis shall be parallel, to within 4/1 000, to the reference plane of the machine;

b) the surfaces shall be parallel, to within 4/1 000, to the corresponding faces of the specimen;

c) when the striking edge of the pendulum is in contact with the specimen, the striking edge and the face of the specimen shall be coincident to within 0,025 mm over the full length of the striking edge, and the line of contact shall be perpendicular, to within 2°, to the longitudinal axis of the specimen.

NOTE One method of verifying this is as follows: A specimen is tightly wrapped in thin paper (e.g. using adhesive tape) and placed in the supports. Similarly, the striker edge is tightly wrapped in carbon paper with the carbon outside (i.e. not facing the striker). From its position of equilibrium, the pendulum is raised a few degrees, released so that it contacts the specimen, but prevented from contacting the specimen a second time. The mark made by the carbon paper on the covering round the specimen should extend across the whole width of the specimen. This test may be performed concurrently with that to check the angle of contact between the striker and the specimen (see 5.8.1).

#### 5.7.1.3 Angle between support surfaces

When checked by a gauge, the angle between the two surfaces of each support shall be 90° ± 0,1°.

#### 5.7.1.4 Distance between supports

This may vary (see ISO 179-1).

#### 5.7.1.5 Slope of supports

The slope (see Figure 2) of the supports, as checked by a gauge, shall be 5° ± 1°.

#### 5.7.1.6 Taper of supports

The taper (see Figure 2) of the supports, as checked by a gauge, shall be 10° ± 1°.

#### 5.7.1.7 Radius of curvature of supports

The radius of curvature of the supports, as checked by a gauge, shall be 1 mm ± 0,1 mm.

#### 5.7.1.8 Location of notch

If means is provided for locating the test specimen, this shall ensure that the plane of symmetry of the notch lies within ± 0,5 mm of the centre of the gap between the specimen supports.

NOTE A gauge that can be used to check the distance between the supports and their alignment relative to the striking edge is shown in annex E.

### 5.7.2 Vices for Izod test machines

Vices designed to hold the test specimen in Izod machines (see Figure 3) shall conform to all of the following requirements:

#### 5.7.2.1 Locating groove for specimen

The specimen-locating groove in the support blocks (if fitted) shall be checked with a gauge and shall conform to the dimensional requirements specified in Table 4.

The locating groove shall enable the specimen to be fully supported at the face about which bending takes place.

The top edge of the support about which bending takes place shall be rounded to a radius of 0,2 mm ± 0,1 mm.

STANDARDSISO.COM : Click to view the full PDF of ISO 13802:1999

#### 5.7.2.2 Location of specimen and striker

When a specimen having the dimensions given in 5.7.1.2 is located in the vice and clamped so that it is attached rigidly to the frame, the following requirements shall be conformed to:

a) the top surface of the support block shall be parallel, to within 3/1 000, to the reference plane of the machine;

b) the longitudinal axis of the specimen shall be perpendicular, to within ± 0,5°, to the top surface of the support block;

c) the notch, which shall face the striker, shall be perpendicular to the plane of swing of the pendulum, and the plane of symmetry of the notch shall coincide with the top surface of the support block, both within ± 0,1 mm;

d) when it contacts the specimen, the striking edge, which shall be sufficiently wide to extend beyond both sides of the specimen, shall be perpendicular, to within ± 2°, to the longitudinal axis of the specimen and parallel, to within 0,025 mm (= 0,36°), to the face of the specimen, over the full width of the specimen.

#### 5.7.2.3 Vice faces

With a specimen clamped in place, the vice faces shall be parallel, to within 4/1 000, in both the horizontal and the vertical direction.

### 5.7.3 Clamps for tensile impact testing

#### 5.7.3.1 General

For specimen types 1, 2, 3 and 4 (see ISO 8256:1990, Table 2 and Figure 3), the surfaces between which the specimen is clamped shall be such that there is no slippage when the blow is struck. This applies to the jaw faces of the clamps attached to the frame or striker, as well as to the crossheads. The clamps shall be of such a design that they do not contribute to the failure of the specimen.

Jaws may have file-like serrations, and the size of the serrations shall be selected, according to experience, to suit the hardness and toughness of the specimen material and its thickness. The edges of the serrated jaws in close proximity to the test region shall have a radius such that they cut across the edges of the first serrations.

#### 5.7.3.2 Special clamps (jaws)

For type 5 specimens (see ISO 8256:1990, Table 2 and Figure 3), held only by embedding, a pair of notched jaws of different heights is necessary. The pair of jaws chosen for the test shall have a height which is greater than the thickness of the specimen but less than 120 % of its thickness.

#### 5.7.3.3 Alignment

When clamped in place, the specimen shall lie the plane of swing of the pendulum to within ± 0,5 mm.

### 5.7.4 Crossheads for tensile impact testing

#### 5.7.4.1 Mass of crosshead

Depending on the energy of the pendulum used, crossheads of different masses have to be used. Ensure, by weighing, that the crosshead mass conforms to the limits given in Table 1 of ISO 8256:1990.

NOTE In order to reduce bouncing due to the impact of the metal striker on metal crossheads, it is recommended that a material is used for the crosshead which gives an essentially inelastic impact. Ductile aluminium has been found satisfactory.

#### 5.7.4.2 Alignment of crossheads

Means shall be provided to ensure conformity to the following requirements after clamping the specimen in place:

a) the impacted faces of the crosshead shall be coplanar and parallel, to within 2/100, to the axis of rotation of the pendulum;

b) the centres of the impacted faces shall be symmetrical, to within ± 0,5 mm, to the plane of swing of the pendulum.

STANDARDSISO.COM : Click to view the full PDF of ISO 13802:1999

## 5.8 Striker

### 5.8.1 Striker for Charpy test machines

The striking edge of the pendulum shall be hardened steel tapered to an included angle of 30° ± 1° and shall be rounded to the radius $R_1$ of 2 mm ± 0,5 mm. These dimensions can be checked with gauges (see annex E). The striking edge shall pass midway, to within ± 0,2 mm, between the specimen supports, and shall be aligned so that it makes contact across the full width or thickness of rectangular specimens. The line of contact shall be within ± 2° of perpendicular to the longitudinal axis of the specimen [see Figure 2 and the note to 5.7.1.2 c)].

The clearance between the supports and the striker, or any adjacent part of the pendulum which passes between the supports, shall be sufficient to ensure that the broken specimen is free to leave the machine with the minimum of interference, thus preventing the possibility of the specimen rebounding into the pendulum.

Any end stop used for locating the test specimen in the supports shall not impede the movement of the specimen during the test.

### 5.8.2 Striker for Izod test machines

The striking edge of the pendulum shall be hardened steel and have a cylindrical surface with a radius of curvature $R_1$ of 0,8 mm ± 0,2 mm, with its axis horizontal and perpendicular to the plane of motion of the pendulum. It shall be aligned so that it makes contact across the full width or thickness of rectangular specimens. The line of contact shall be within ± 2° of the perpendicular to the longitudinal axis of the specimen, and shall be 22 mm ± 0,2 mm above the top surface of the vice (see Figure 3).

### 5.8.3 Striker for tensile impact test machines

See ISO 8256:1990.

#### 5.8.3.1 Striker for method A

The striker for method A shall be made of steel. It shall have two surfaces coplanar to within 4/1 000 and parallel, to within 5/1 000, to the axis of rotation of the pendulum.

When using a specimen measuring (80 mm ± 2 mm) × (10 mm ± 0,2 mm) × (4 mm ± 0,2 mm), the centres of the contact areas on the crossheads (see 5.7.4.2) and on the striker shall lie in a plane which is horizontal to within 2° and within ± 0,5 mm of the plane of swing of the pendulum.

#### 5.8.3.2 Striker for method B

The striker for method B shall be made of steel. It shall be designed so that specimens can be securely clamped in it (see 5.7.3.1).

When clamped in place, the specimen shall lie in the plane of swing of the pendulum to within ± 0,5 mm.

The contact surfaces on the crosshead, mounted on a rectangular reference specimen, shall be coplanar and parallel, to within 5/1 000, to the axis of rotation of the pendulum.

For this purpose, the reference test specimen (made e.g. from stainless steel) shall be clamped in the striker in such a way that its longitudinal axis is parallel, to within 4/1 000, to the plane of swing of the pendulum.

## 6 Time interval between verifications

All impact-testing machines shall be reverified at suitable intervals, depending on their design and the nature and extent of their use.

NOTE 1 An interval of 2 years is recommended for a machine which is in good order and is used under favourable conditions of service.

NOTE 2 During the period between successive verifications, partial verifications are recommended at intervals of 1 year for a machine which is in good order and is used under favourable conditions of service.

STANDARDSISO.COM : Click to view the full PDF of ISO 13802:1999

A machine shall be reverified if it is moved to a new location, or is subject to major repairs or adjustments, or if there is any reason to doubt the accuracy of the results it gives. The decision as to whether a complete or partial verification is to be carried out shall rest with the verifying authority.

For a partial verification, compliance with clauses 5.2, 5.4, 5.6 and 5.8. is required.

## 7 Verification report

On completion of a complete verification, a report shall be issued. The report shall include the following information:

a) the name and address of the verifying authority;

b) the name and address of the client;

c) a description of the machine, including, where relevant

   1) the maker,

   2) the type or model,

   3) the serial number,

   4) the type or types of test,

   5) the nominal potential energy of each pendulum;

d) the location of the machine;

e) the date of verification

f) a reference to this International Standard;

g) details of any repairs and adjustments made;

h) the mean values of $W_{f,1}$, $W_{f,2}$ and $W_{f,3}$ (see 5.6);

i) a statement of conformity or otherwise to the requirements of clause 5;

j) the date of the report.

In addition, a report number and the recommended date for the next verification, complete or partial, shall be included in the report.

STANDARDSISO.COM : Click to view the full PDF of ISO 13802:1999

# Annex A
(informative)

## Relationship between the various pendulum lengths

Three pendulum lengths are defined in 3.5 to 3.7. They are the distance from the axis of rotation to:

the centre of gravity of the pendulum ($L_M$);

the centre of percussion ($L_P$);

the centre of inertia ($L_G$).

The pendulum length $L_P$ can be determined by measuring the period of oscillation of the pendulum $T_P$ [see equation (1)].

The gyration length $L_G$ cannot be measured directly. It is given, in metres, mathematically by the equation

$$L_G = \sqrt{J/m_P} \tag{A.1}$$

where

$m_P$ is the pendulum mass, in kilograms (determined by weighing),

$J$ is the moment of inertia, in kilograms metre squared, of the pendulum, given by

$$J = \int_0^{m_P} r^2 \, dm \tag{A.2}$$

$r$ being the distance, in metres, from the axis of rotation.

The distance from the axis of rotation to the centre of gravity $L_M$ can be determined by measuring the horizontal moment $M_H$, in newton metres, required to support the pendulum in a horizontal position. This is given by

$$M_H = g \cdot \int_0^{m_P} r \, dm \tag{A.3}$$

where $g$ is the local acceleration due to gravity, in metres per second squared.

Since the gravity length $L_M$ is given by

$$L_M = \frac{1}{m_P} \int_0^{m_P} r \, dm \tag{A.4}$$

it follows from equation (A.3) that

$$L_M = \frac{M_H}{g m_P} \tag{A.5}$$

STANDARDSISO.COM : Click to view the full PDF of ISO 13802:1999

As an alternative to equation (1), the pendulum length $L_P$ can be described by the equation

$$L_P = \frac{J}{m_P L_M} \tag{A.6}$$

From equations (A.1) and (A.6), it follows that the gyration length represents the geometric mean of the gravity length and the pendulum length

$$L_G = \sqrt{L_P L_M}$$

$$L_P = \frac{L_G^2}{L_M} \tag{A.7}$$

It can also be shown that

$$L_M \leqslant L_G \leqslant L_P \tag{A.8}$$

where the identities are for the case of a mathematical pendulum. Since the height of fall $H_M = L_M (1 - \cos \alpha_0)$ where $\alpha_0$ is the starting angle [see (Figure 1b)], the potential energy $E = H_M \cdot m_P \cdot g$ can be calculated in terms of $L_M$ and $\alpha_0$. Inserting equation (A.5) gives equation (3).

STANDARDSISO.COM : Click to view the full PDF of ISO 13802:1999

# Annex B
(informative)

## Ratio of frame mass to pendulum mass

The maximum value of the energy $W_F$ transferred to the frame during impact can be estimated assuming that during the impact the elastically mounted frame can move freely. The period of impact is short compared with the period of oscillation $T_F$ of the frame.

Neglecting the momentum of the broken specimen, the principle of conservation of momentum gives

$$m_F v_F = m_P (v_I - v_A) \tag{B.1}$$

where

$m_F$ is the mass of the frame, in kilograms;

$m_P$ is the mass of the pendulum, in kilograms;

$v_F$ is the maximum velocity of the frame just after impact, in metres per second;

$v_I$ is the impact velocity, in metres per second;

$v_A$ is the velocity of the pendulum just after impact, in metres per second.

Squaring equation (B.1) and inserting the potential energy:

$$E = \frac{m_P v_I^2}{2}$$

and the energy uptake by the frame:

$$W_F = \frac{m_F v_F^2}{2}$$

gives

$$\frac{m_F}{m_P} = \frac{\left(1 - \frac{v_A}{v_I}\right)^2 E}{W_F} \tag{B.2}$$

The principle of conservation of energy gives

$$E = \frac{m_P v_A^2}{2} + W + W_F \tag{B.3}$$

which, on rearrangement, gives

$$\frac{v_A}{v_I} = \sqrt{\frac{1 - (W + W_F)}{E}} \tag{B.4}$$

where $W$ is the impact energy.

STANDARDSISO.COM : Click to view the full PDF of ISO 13802:1999

Inserting equation (B.4) into (B.2) gives the ratio of the frame mass to the pendulum mass expressed in terms of the relative impact energy of the specimen and the relative energy uptake of the frame:

$$\frac{m_F}{m_P} = \left[1 - \sqrt{\frac{1-(W+W_F)}{E}}\right]^2 \times \frac{E}{W_F} \qquad \text{(B.5)}$$

The energy absorbed by the frame shall not exceed 0,5 % of $E$. The mass ratio $m_F/m_P$ is shown in Figure B.1 for $W_F/E$ = 0,005 and 0,01, i.e. for an energy uptake by the frame of 0,5 % and 1 % of $E$ (see also Table 7).

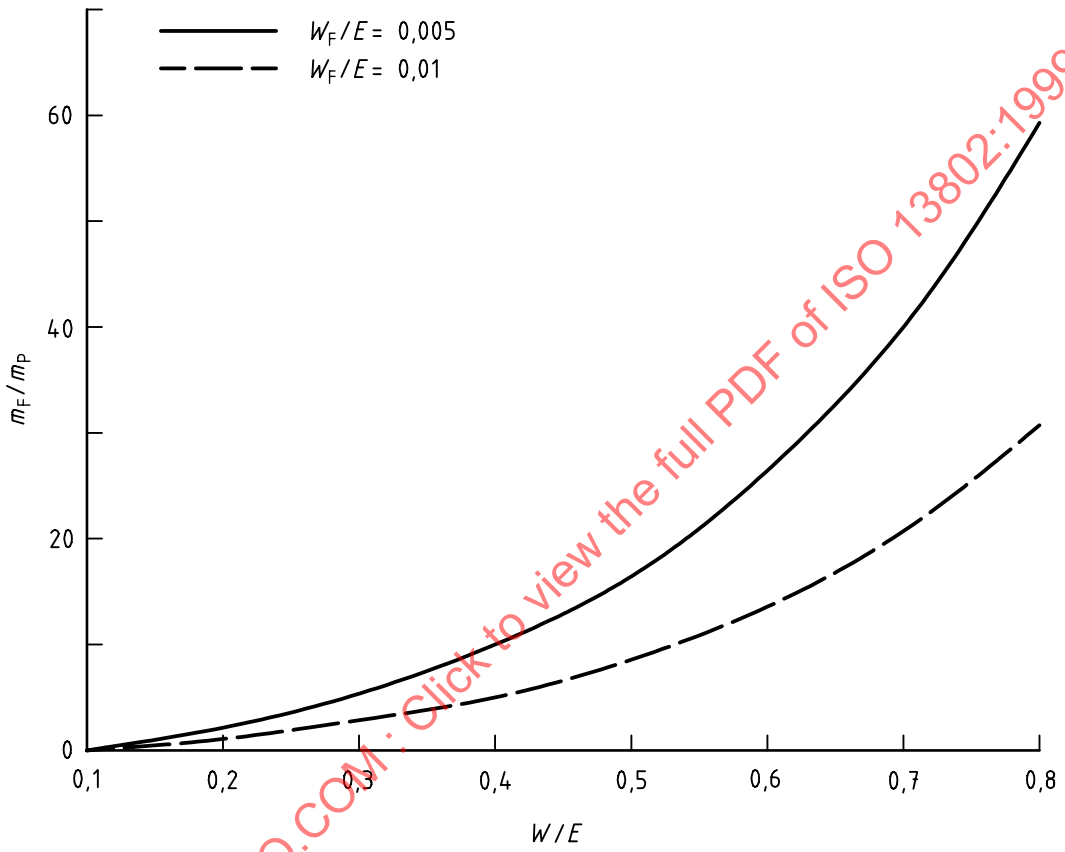


**Figure B.1 — Ratio of mass of frame to mass of pendulum plotted against the relative energy uptake by the specimen $W/E$ for two values of the relative energy uptake by the frame $W_F/E$**

STANDARDSISO.COM : Click to view the full PDF of ISO 13802:1999

# Annex C
(informative)

## Deceleration of pendulum during impact

The tangential velocity $v_A$, in metres per second, of the pendulum, at the impact length, just after impact can be written as in equation (B.4) but without $W_F$:

$$v_A = v_I \sqrt{1 - \frac{W}{E}} \qquad \text{(C.1)}$$

where

$v_I$ is the impact velocity, in metres per second;

$W$ is the impact energy, in joules;

$E$ is the potential energy of the pendulum, in joules.

Figure C.1 shows $v_A$ plotted as function of impact energy, impact strength and notched impact strength (Charpy impact test ISO 179-1/1eU and ISO 179-1/1eA) for the different pendulums used.

The velocities after impact are given for 10 % to 80 % of the potential energy $E$ that may be absorbed for a particular pendulum (20 % to 80 % for tensile impact tests – see ISO 8256).

In addition, within the energy range given above, the pendulum with the highest possible potential energy shall always be used.

This requirement is indicated by the bold line in Figure C.1. As a consequence of this requirement, the range of velocities occurring in Charpy impact testing is considerably reduced. The deceleration due to the work spent in impacting the specimen is effectively restricted to 5 % to 10 % of the impact velocity.

This requirement ensures that impact tests employing pendulums of different potential energy are performed at approximately the same velocity.

STANDARDSISO.COM : Click to view the full PDF of ISO 13802:1999

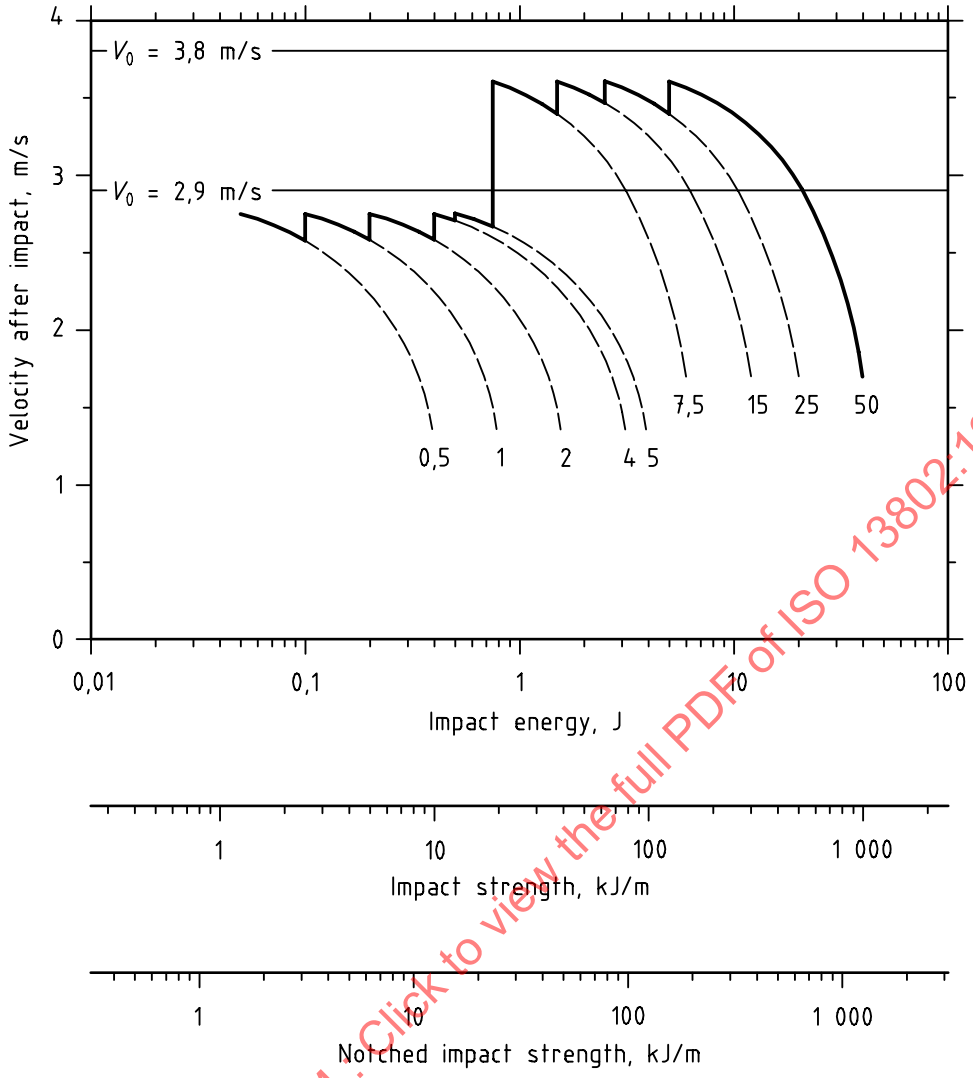


**Figure C.1 — Pendulum velocity after impact as a function of impact energy, impact strength and notched impact strength for Charpy impact testing**

STANDARDSISO.COM : Click to view the full PDF of ISO 13802:1999

# Annex D
(informative)

# Interrelationship between the movement of the pendulum and that of the frame

## D.1 General

As it moves, the pendulum exerts forces on the frame. The frame, which has a finite mass and a mounting of finite stiffness, reacts to these forces in the form of forced oscillations involving both potential and kinetic energy. The loss of energy of the pendulum cannot therefore be attributed solely to the impact test and attendant frictional losses but includes as an additional error the energy transferred to the frame. Depending on the mass of the frame and that of the pendulum, and on the stiffness of the mounting, resonant effects may occur which lead to a large increase in the energy absorbed by the frame. The design of the pendulum impact machine must ensure that the errors mentioned above remain below an acceptable limit throughout the working range of the machine. This annex makes recommendations for the design of the machine, derived from numerical analysis of the movement of the frame and the pendulum.

Figure D.1 shows the model of machine used. It will be assumed that the frame can move horizontally only. Thus, only its stiffness $S_F$ in the horizontal direction has to be considered.

Figure D.2 shows curves of the normalized horizontal force $f_h$ (= $F_h/G_P$) (solid lines) and angle of the pendulum (dashed lines) versus normalized time $t/T_P$, $T_P$ being the period of oscillation of the pendulum and $G_P$ being the effective weight of the pendulum. Since $t/T_P$ tends to infinity at $\alpha$ = 180°, the time scale is centred on $\alpha$ = 0°.

The dot and dashed line is the locus of the points representing one-quarter of the period of oscillation for each different starting angle $\alpha_0$. It shows that the period of oscillation increases with increasing starting angle. Only near $\alpha$ = 0° is the period of oscillation independent of the starting angle and tends towards the limit $T_P/4$.

One important fact is that the horizontal force $f_h$ forms a double pulse, the peaks of which have a relative normalized time interval of $\Delta t/T_P$ = 0,16 for $\alpha_0$ = 180°. This is about one-third of the corresponding time interval ($\Delta t/T_P$ = 0,5) for the small amplitude limit. It can be seen from Figure D.2 that the positions of the peaks in the horizontal force are almost constant from $\alpha_0$ = 180° down to $\alpha_0$ = 90°.

Hence, regardless of the type of the machine, it can be expected that the frame will vibrate strongly if its period of oscillation is about one-third of that of the pendulum at small amplitudes.

For the complete pendulum, the above condition can be checked by using the ratio of the period of oscillation of the frame to that of the pendulum. The ratio of these two periods of oscillation is given by

$$\frac{T_P}{T_F} = \frac{v_I^2}{2g}\sqrt{\frac{S_F}{\mu E(1-\cos\alpha_0)}} \qquad \text{(D.1)}$$

where

$T_P$ is the period of oscillation of the pendulum, in seconds;

$T_F$ is the period of oscillation of the frame, in seconds;

$v_I$ is the impact velocity, in metres per second;

$\mu$ (= $m_F/m_P$) is the ratio of the mass of the frame to that of the pendulum;

$S_F$ is the horizontal stiffness between the frame and the foundation, in newtons per metre (see Figure D.1);

STANDARDSISO.COM : Click to view the full PDF of ISO 13802:1999

$E$ is the potential energy of the pendulum, in joules;

$\alpha_0$ is the starting angle, in degrees;

$g$ is the local acceleration due to gravity, in metres per square second.

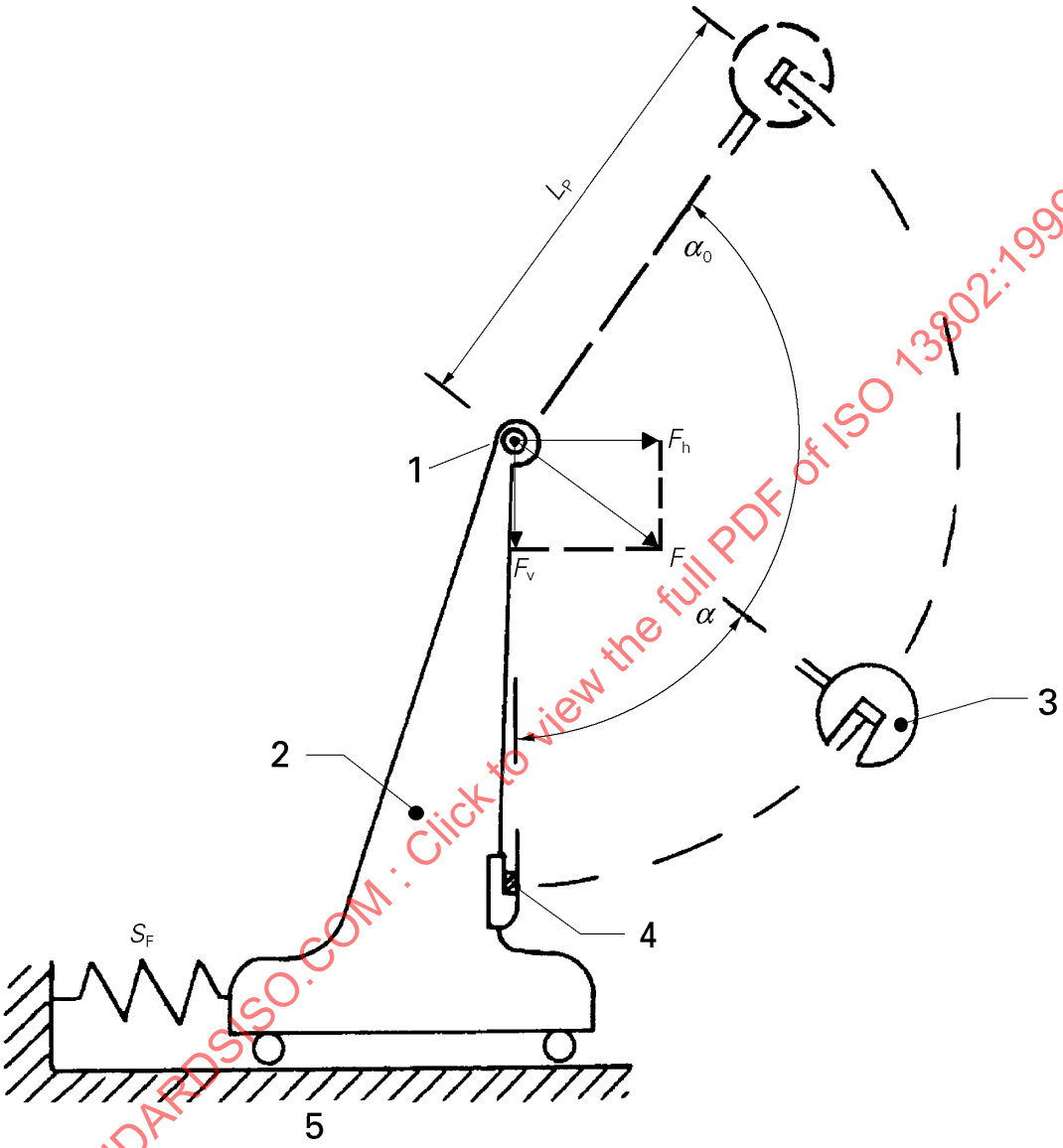


**Key**

1 Axis of rotation
2 Frame
3 Pendulum
4 Test specimen
5 Foundation

**Figure D.1 — Model for calculating the movement of the frame**

STANDARDSISO.COM : Click to view the full PDF of ISO 13802:1999

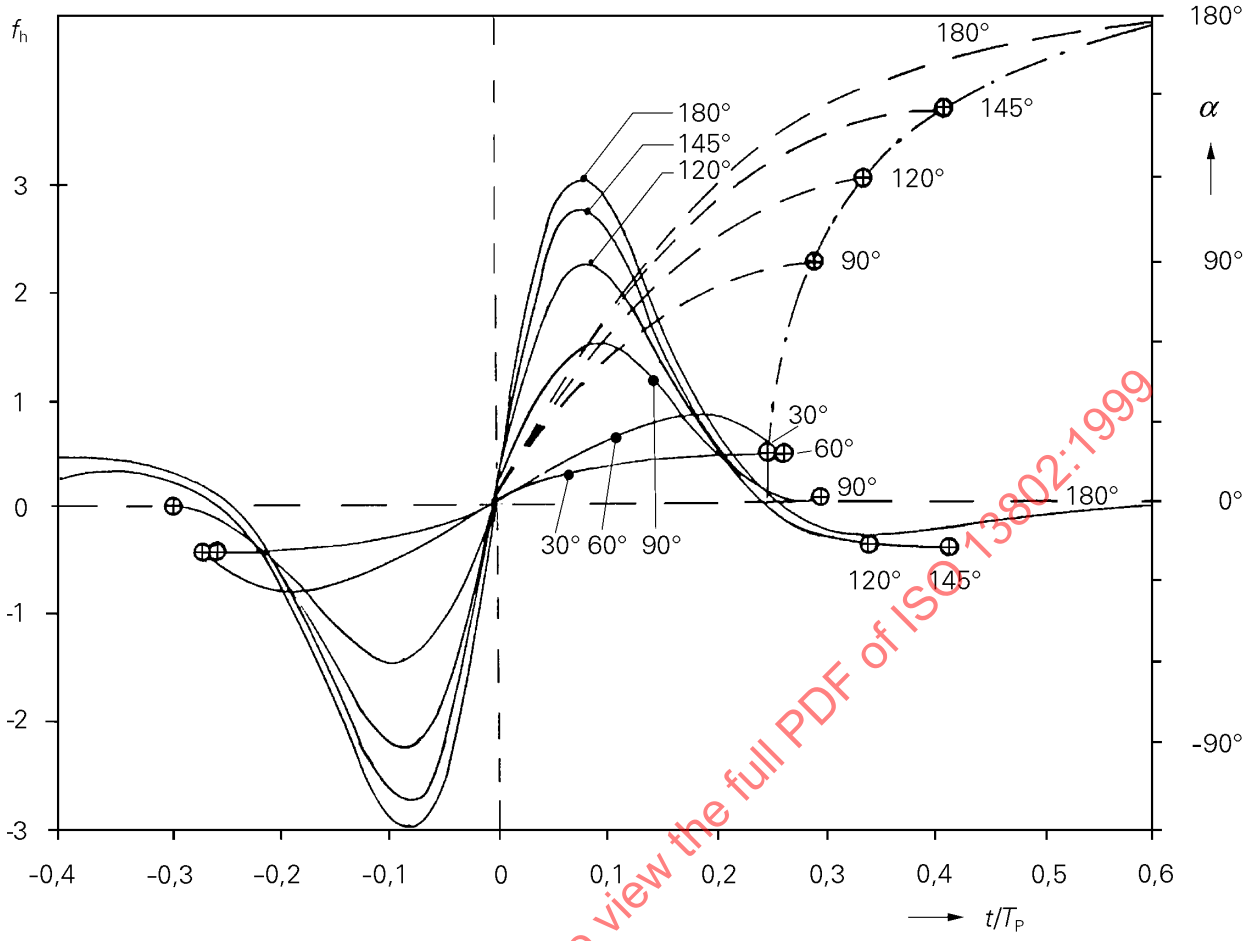


**Figure D.2 — Normalized horizontal force $f_h$ ($= F_h/G_P$) (solid lines) and angle $\alpha$ (dashed lines) of a pendulum versus normalized time $t/T_P$ for different values of the starting angle $\alpha_0$**

STANDARDSISO.COM : Click to view the full PDF of ISO 13802:1999

An example of the experimental determination of $S_F$ is shown in Figure D.3.

For $T_P/T_F$ = 3, the horizontal oscillation of the frame is in resonance with the pendulum oscillation. The elimination of this resonance is necessary, but does not suffice. Two limiting cases of machine set-up may occur.

These are

a frictionless, horizontally freely movable frame, i.e. a frame with a very low stiffness, for which $T_F$ is therefore $\gg T_P$;

an elastically mounted frame with a very high stiffness, for which $T_F \ll T_P$.

## D.2 Case 1: freely movable frame

Figure D.4 shows as an example the relative positions of a frame and pendulum with a mass ratio $\mu$ of 4 during a half-swing. The amplitude of oscillation of the frame is given by $s = \pm L_M/4$.

Due to the movement of the frame, the impact velocity is not constant, but varies according to the equation

$$v_{I,1} = v_I \sqrt{1 + \frac{1}{\mu}} \qquad \text{(D.2)}$$