INTERNATIONAL STANDARD

ISO 23913

First edition
2006-05-15

Water quality — Determination of chromium(VI) — Method using flow analysis (FIA and CFA) and spectrometric detection

Qualité de l'eau — Dosage du chrome(VI) — Méthode par analyse en flux (FIA et CFA) et détection spectrométrique

STANDARDSISO.COM : Click to view the full PDF of ISO 23913:2006

Reference number
ISO 23913:2006(E)

© ISO 2006

PDF disclaimer

This PDF file may contain embedded typefaces. In accordance with Adobe's licensing policy, this file may be printed or viewed but shall not be edited unless the typefaces which are embedded are licensed to and installed on the computer performing the editing. In downloading this file, parties accept therein the responsibility of not infringing Adobe's licensing policy. The ISO Central Secretariat accepts no liability in this area.

Adobe is a trademark of Adobe Systems Incorporated.

Details of the software products used to create this PDF file can be found in the General Info relative to the file; the PDF-creation parameters were optimized for printing. Every care has been taken to ensure that the file is suitable for use by ISO member bodies. In the unlikely event that a problem relating to it is found, please inform the Central Secretariat at the address given below.

STANDARDSISO.COM : Click to view the full PDF of ISO 23913:2006

© ISO 2006

All rights reserved. Unless otherwise specified, no part of this publication may be reproduced or utilized in any form or by any means, electronic or mechanical, including photocopying and microfilm, without permission in writing from either ISO at the address below or ISO's member body in the country of the requester.

ISO copyright office
Case postale 56 • CH-1211 Geneva 20
Tel. + 41 22 749 01 11
Fax + 41 22 749 09 47
E-mail copyright@iso.org
Web www.iso.org

Published in Switzerland

Contents

Page

Foreword ... iv
Introduction ... v
1 Scope ... 1
2 Normative references ... 1
3 Principle ... 1
4 Interferences ... 2
5 Reagents ... 2
6 Apparatus ... 5
7 Sampling and sample preparation ... 6
8 Procedure ... 6
9 Determination ... 7
10 Expression of results ... 8
11 Test report ... 8
Annex A (informative) **Examples of flow analysis systems for the determination of chromium(VI)** ... 9
Annex B (informative) **Performance characteristics** ... 12
Bibliography ... 14

STANDARDSISO.COM : Click to view the full PDF of ISO 23913:2006

© ISO 2006 – All rights reserved

Foreword

ISO (the International Organization for Standardization) is a worldwide federation of national standards bodies (ISO member bodies). The work of preparing International Standards is normally carried out through ISO technical committees. Each member body interested in a subject for which a technical committee has been established has the right to be represented on that committee. International organizations, governmental and non-governmental, in liaison with ISO, also take part in the work. ISO collaborates closely with the International Electrotechnical Commission (IEC) on all matters of electrotechnical standardization.

International Standards are drafted in accordance with the rules given in the ISO/IEC Directives, Part 2.

The main task of technical committees is to prepare International Standards. Draft International Standards adopted by the technical committees are circulated to the member bodies for voting. Publication as an International Standard requires approval by at least 75 % of the member bodies casting a vote.

Attention is drawn to the possibility that some of the elements of this document may be the subject of patent rights. ISO shall not be held responsible for identifying any or all such patent rights.

ISO 23913 was prepared by Technical Committee ISO/TC 147, *Water quality*, Subcommittee SC 2, *Physical, chemical and biochemical methods*.

STANDARDSISO.COM : Click to view the full PDF of ISO 23913:2006

© ISO 2006 – All rights reserved

Introduction

Methods using flow analysis automatic wet chemical procedures are particularly suitable for the processing of many analytes in water, in large sample series at a high analysis frequency.

Analysis can be performed by flow injection analysis (FIA) [1], [2] and continuous flow analysis (CFA). Both methods share the feature of an automatic dosage of the sample into a flow system (manifold) where the analyte in the sample reacts with the reagent solutions on its way through the manifold. The sample preparation may be integrated in the manifold. The reaction product is measured in a flow detector (e.g. flow photometer).

It should be investigated whether and to what extent particular problems will require the specification of additional marginal conditions.

STANDARDSISO.COM : Click to view the full PDF of ISO 23913:2006

© ISO 2006 – All rights reserved

Water quality — Determination of chromium(VI) — Method using flow analysis (FIA and CFA) and spectrometric detection

WARNING — Persons using this International Standard should be familiar with normal laboratory practice. This standard does not purport to address all of the safety problems, if any, associated with its use. It is the responsibility of the user to establish appropriate safety and health practices and to ensure compliance with any national regulatory conditions.

IMPORTANT — It is absolutely essential that tests conducted according to this International Standard are carried out by suitably qualified staff.

STANDARDSISO.COM : Click to view the full PDF of ISO 23913:2006

1 Scope

This International Standard specifies flow injection analysis (FIA) and continuous flow analysis (CFA) methods for the determination of chromium(VI) in various types of water. The method applies to the following mass concentration ranges.

FIA: 20 µg/l to 200 µg/l and 200 µg/l to 2 000 µg/l for surface water, leachates and waste water.

CFA: 2 µg/l to 20 µg/l and 20 µg/l to 200 µg/l for drinking water, ground water, surface water, leachates and waste water.

The range of application may be changed by varying the operating conditions.

Seawater may be analysed by these methods with changes in sensitivity and after adaptation of the reagent and calibration solutions to the salinity of the samples.

2 Normative references

The following referenced documents are indispensable for the application of this document. For dated references, only the edition cited applies. For undated references, the latest edition of the referenced document (including any amendments) applies.

ISO 3696, *Water for analytical laboratory use — Specification and test methods*

ISO 5667-3, *Water quality — Sampling — Part 3: Guidance on the preservation and handling of water samples*

ISO 8466-1, *Water quality — Calibration and evaluation of analytical methods and estimation of performance characteristics — Part 1: Statistical evaluation of the linear calibration function*

3 Principle

Chromium(VI) reacts with 1,5-diphenylcarbazide (DPC) to form a red-violet chromium-1,5-diphenylcarbazone complex. The absorbance of this complex is measured at 544 nm ± 10 nm (maximum absorbance at 544 nm).

© ISO 2006 – All rights reserved

4 Interferences

Reducing agents in the sample may lead to negative bias for the chromium(VI) concentration.

Nitrite does not interfere with the method under the reaction conditions.

Concentrations of sulfide exceeding 0,2 mg/l interfere with the method.

Oxidizing agents for disinfection in drinking water production like chlorine, chlorine dioxide, ozone and hydrogen peroxide do not interfere with the method provided their mass concentration does not exceed the concentrations given in Table 1.

Table 1 — Mass concentrations of single disinfection agents not producing significant interference under the given measuring conditions

Disinfectant	Concentration mg/l
Chlorine	0,6
Chlorine dioxide	0,4
Hydrogen peroxide	0,2
Ozone	0,1

Other oxidizing agents like peroxoacetic acid, or permanganate may interfere in the chromium(VI) determination. This shall be considered in the results.

Strongly alkaline or buffered samples may cause negative bias. This effect may be tested by adding 1 part of acid mixture (5.5.1 or 5.5.2) to 3 parts of the sample. This mixture shall have a pH of < 1. Otherwise, pretreat the samples with acids (HCl, H_2SO_4) until the above mentioned test leads to sufficient results.

Iron (III) ions exceeding 10 mg/l interfere with the methods. In the range of 10 mg/l to 100 mg/l, iron (III) ions may lead to a negative bias of up to 8 %.

Coloured or turbid samples can cause a bias. To avoid bias, measure the sample again using solution 5.17 instead of solution 5.10 for feeding line "R2" in Figures A.1 to A.3. Subtract the result of this measurement y_s from the term y in Equation (2).

5 Reagents

Use analytical grade chemicals unless otherwise specified.

5.1 Water, complying to grade 1 as defined in ISO 3696. The chromium blank value shall be checked (see 8.3).

5.2 Sulfuric acid, $\rho(H_2SO_4) = 1{,}84$ g/ml.

5.3 Orthophosphoric acid, $\rho(H_3PO_4) = 1{,}71$ g/ml.

5.4 Surfactant solution, aqueous polyethylene glycol dodecyl ether, $[HO\text{-}(CH_2\text{-}CH_2O)_nC_{12}H_{21}]$, with a mass fraction of 30 %.

STANDARDSISO.COM : Click to view the full PDF of ISO 23913:2006

© ISO 2006 – All rights reserved

5.5 Acid mixtures.

5.5.1 Acid mixture for FIA, (R1 in Figure A.1).

Add to a 250 ml volumetric flask about 125 ml of water (5.1). Add 29 ml of sulfuric acid (5.2) and 31 ml of orthophosphoric acid (5.3), mix and bring to volume with water (5.1).

This solution acidifies the reaction mixture passing the detector to a necessary pH of < 1.

The solution is stable for up to 1 year if stored at room temperature.

5.5.2 Acid mixture for CFA, (R1 in Figures A.2 and A.3).

Add 1 ml of surfactant solution (5.4) to 200 ml of acid mixture for FIA (5.5.1).

The solution is stable for up to 1 week if stored at room temperature.

5.6 1,5-diphenylcarbazide, $C_{13}H_{14}N_4O$.

5.7 Acetone, C_3H_6O.

5.8 1-Propanol, C_3H_8O.

5.9 Potassium dichromate, $K_2Cr_2O_7$.

5.10 Diphenylcarbazide solution, (R2 in Figures A.1 to A.3).

Dissolve in a 250 ml beaker 0,43 g of 1,5-diphenylcarbazide (5.6) in 9 ml of acetone (5.7) and 9 ml of 1-propanol (5.8). Add 125 ml of 1-propanol (5.8).Transfer the mixture to a 250 ml volumetric flask, and make up to volume with water (5.1).

The solution is stable for up to 1 week if stored in a brown glass bottle at 2 °C to 6 °C.

If precipitation occurs, filter the solution.

NOTE The use of a mixture of acetone and 1-propanol permits the redissolving of precipitates of 1,5-diphenylcarbazide occurring on cooling. In the literature, several solvents (acetone, 1-propanol, 2-propanol, ethanol, in combination with water) are proposed for preparing the diphenylcarbazide solution. These alternatives are also applicable, provided the solutions are stable enough and contain the same concentration of 1,5-diphenylcarbazide (5.6) as given in 5.10.

Degas carefully all reagent solutions for the FIA determinations before use, e.g. by vacuum filtration.

5.11 Carrier solution for FIA systems, (C in Figure A.1).

Use water (5.1).

Carrier and samples should have identical acidity. For unpreserved samples, this means that water should be used as a carrier. According to References [5] and [6] in the Bibliography, acidic preservation should be avoided in chromium speciation because of low recovery.

5.12 Chromium(VI) stock solution, ρ [Cr(VI)] = 1 000 mg/l.

WARNING — Potassium dichromate is carcinogenic.

Dissolve 2,829 g of potassium dichromate, $K_2Cr_2O_7$ (5.9) in water (5.1) in a 1 000 ml volumetric flask. Dilute to volume with water (5.1).

The solution is stable for up to 1 year if stored at room temperature.

1 ml of this solution contains 1 mg of Cr(VI).

NOTE Chromium(VI) solutions are commercially available and may be used in this International Standard.

STANDARDSISO.COM : Click to view the full PDF of ISO 23913:2006

© ISO 2006 – All rights reserved

5.13 Chromium(VI) standard solution I, ρ[Cr(VI)] = 10 mg/l.

Pipette 1 ml of the chromium(VI) stock solution (5.12), into a 100 ml volumetric flask. Dilute to volume with water (5.1).

Prepare this solution fresh daily. The solution can be stored during the day of use at room temperature.

1 ml of this solution contains 10 µg of Cr.

5.14 Chromium(VI) standard solution II, ρ[Cr(VI)] = 1 mg/l.

Pipette 10 ml of the chromium(VI) standard solution I (5.13), into a 100 ml volumetric flask. Dilute to volume with water (5.1).

Prepare this solution fresh daily. The solution can be stored during the day of use at room temperature.

1 ml of this solution contains 1 µg of Cr.

5.15 Chromium(VI) standard solution III, ρ[Cr(VI)] = 0,1 mg/l.

Pipette 10 ml of the chromium(VI) standard solution II (5.14), into a 100 ml volumetric flask. Dilute to volume with water (5.1).

Prepare this solution fresh daily. The solution can be stored during the day of use at room temperature.

1 ml of this solution contains 0,1 µg of Cr.

5.16 Calibration solutions.

Prepare calibration solutions by diluting solutions 5.13 to 5.15 according to the range required. For examples, see Tables 2, 3 and 4. At least five calibration standards per working range are recommended.

STANDARDSISO.COM : Click to view the full PDF of ISO 23913:2006

Table 2 — Example for the preparation of 10 calibration solutions for the range 2 µg/l to 20 µg/l Cr

Millilitres of chromium(VI) standard solution III (5.15) diluted to 100 ml	2	4	6	8	10	12	14	16	18	20
Concentration of chromium in the calibration solutions in micrograms per litre, µg/l	2	4	6	8	10	12	14	16	18	20

Table 3 — Example for the preparation of 10 calibration solutions for the range 20 µg/l to 200 µg/l Cr

Millilitres of chromium(VI) standard solution II (5.14) diluted to 100 ml	2	4	6	8	10	12	14	16	18	20
Concentration of chromium in the calibration solutions in micrograms per litre, µg/l	20	40	60	80	100	120	140	160	180	200

Table 4 — Example for the preparation of 10 calibration solutions for the range 200 µg/l to 2 000 µg/l Cr

Millilitres of chromium(VI) standard solution I (5.13) diluted to 100 ml	2	4	6	8	10	12	14	16	18	20
Concentration of chromium in the calibration solutions in micrograms per litre, µg/l	200	400	600	800	1000	1200	1400	1600	1800	2000

© ISO 2006 – All rights reserved

Prepare the calibration solutions daily. The solutions can be stored during the day of use at room temperature.

5.17 Solution for measuring the self absorbance of samples (optional for coloured or turbid samples).

Mix in a 250 ml volumetric flask 9 ml of acetone (5.7), 9 ml of 1-propanol (5.8) and 125 ml of 1-propanol (5.8). Make up to volume with water (5.1).

The mixture is stable for up to 1 month if stored at 2 °C to 6 °C.

6 Apparatus

Usual laboratory apparatus, and, in particular the following.

6.1 Flow injection analysis (FIA).

The system generally consists of the following components (see Figure A.1):

6.1.1 Reagent containers.

6.1.2 Low-pulsation pump with suitable pump tubes.

6.1.3 Manifold with transmission tubing, 0,5 mm to 0,8 mm internal diameter, connectors and T-pieces of chemically inert materials.

6.1.4 Photometric flow-through detector, wavelength (544 ± 10) nm, wavelength maximum 544 nm.

6.1.5 Data display unit, such as a PC, printer or plotter; in general, peak height signals are evaluated.

6.1.6 Sample changer, if required.

6.2 Continuous-flow analysis (CFA).

The system generally consists of the following components (see Figures A.2 and A.3):

6.2.1 Sampler or other device, for reproducible sample introduction.

6.2.2 Reagent containers.

6.2.3 Peristaltic pump, with suitable pump tubes inert to the reagents used.

6.2.4 Thermostated reaction coil, only for the determination of the sum of chromium(VI) and chromium(III).

6.2.5 Manifold, with reproducible gas bubble introduction, sample and reagent introduction and components of chemically inert materials.

6.2.6 Photometric flow-through detector, wavelength (544 ± 10) nm.

6.2.7 Data display unit, such as a PC, printer or plotter; in general peak height signals are evaluated.

NOTE Figures A.2 and A.3 show CFA systems with 2 mm internal diameter tubing (so-called “macroflow”). Other tubing diameters (e.g. 1 mm; so-called “microflow”) may be used as long as the flow rates are in the same proportion and the recovery rates in 8.2 are achieved.

6.3 Additional apparatus.

6.3.1 Graduated flasks, nominal capacity 100 ml, 200 ml and 1 000 ml.

6.3.2 Pipettes, nominal capacity 1 ml, 2 ml, 5 ml and 10 ml.

STANDARDSISO.COM : Click to view the full PDF of ISO 23913:2006

© ISO 2006 – All rights reserved

6.3.3 Membrane filter assembly, with membrane filters, pore size 0,45 µm.

6.3.4 Analytical balance.

7 Sampling and sample preparation

Preserve samples as specified in ISO 5667-3. Samples for the determination of Cr(VI) may be stored for a maximum of 24 h at 2 °C to 5 °C. Directly prior to the analysis acidify the samples by adding 10 ml of 0,5 mol/l sulfuric acid to 1 l of sample. The pH should be approximately 3. If necessary, filter the acidified sample (folded filter).

Do not treat the samples for the determination of chromium(VI) by the addition of reagents (e.g. formaldehyde) in order to prevent the change of chromium species by reduction.

8 Procedure

8.1 General

Use the procedure specified by the analyser manufacturer as long as it is not in contradiction with this International Standard.

8.2 Preparing for the analysis

Set up the flow analyser for the desired procedure (FIA or CFA: see Figures A.1 to A.3).

Pump water as sample (line “S” in Figures A.1 to A.3) and the reagents for up to 10 min.

The pH of the reaction mixture (see line “W” in Figure A.1, and line “A” in Figures A.2 and A.3) shall be < 1.

The analyser is ready when there is no baseline drift. Proceed then with steps 8.3 to 8.5.

8.3 Quality requirements for the measuring system, instrument performance checks

8.3.1 Checking the reagent blank

Wait for a stable baseline.

Replace the reagent solutions R1 and R2 with water (5.1).

If the absorbance per centimetre is reduced by more than 0,01 cm^{-1} the reagents or the water may be contaminated, and suitable measures to eliminate the interference shall be undertaken before starting the analysis.

Pump reagents solutions again.

If the photometric detector (6.1 or 6.2) does not allow any absorbance readings, the absorbance may be determined by comparing with an external absorbance measuring photometer.

8.3.2 Daily sensitivity test and noise test

Calibration solutions (5.16) with the smallest chromium concentration of each working range shall exhibit an absorbance per centimetre of at least 0,005 cm^{-1} for FIA and 0,003 cm^{-1} for CFA and shall exhibit a signal to noise relation of at least 3:1.

STANDARDSISO.COM : Click to view the full PDF of ISO 23913:2006

 © ISO 2006 – All rights reserved

8.4 Calibration

Select the desired working range and the appropriate calibration solutions (5.16).

Use a separate calibration with at least 5 calibration solutions for each working range.

Before starting the analysis, set the output signal to zero.

Calibrate by sequentially applying the calibration solutions and reagent blanks.

Obtain the measured values corresponding to the calibration solutions applied. The output signal is proportional to the chromium(VI) concentration.

Make sure that the analytical conditions for the calibration solutions and the analytical samples are identical (see 8.5).

The following general Equation (1) for the linear calibration [ISO 8466-1] applies.

$$y = a + b \cdot \rho \tag{1}$$

where

y is the measured value, in system related units;

b is the slope of the calibration curve, in system related units litres per micrograms, l/µg or in system related units · litres per milligram, l/mg;

ρ is the mass concentration of chromium(VI), in micrograms per litre, µg/l or in milligrams per litre, mg/l;

a is the calibration curve intercept, in system related units.

8.5 Measurement

Analyse samples, prepared according to Clause 7, in the same way as the calibration solutions (5.16).

If the sample concentration is higher than the selected working range, analyse the sample in a different range or dilute.

After each group of sample measurements, at least after every 20 measurements, check the system calibration, using one calibration solution (5.16) each for lower and upper part of the respective working range. If the results of these two solutions are placed outside the confidence range of the calibration curve re-calibrate the system.

9 Determination

Calculate the mass concentration of chromium(VI) in the samples using Equation (2):

$$\rho = (y - a) / b \tag{2}$$

In the case of coloured or turbid samples, use Equation (3):

$$\rho = (y - y_{\mathrm{s}} - a) / b \tag{3}$$

STANDARDSISO.COM : Click to view the full PDF of ISO 23913:2006

© ISO 2006 – All rights reserved

where

y_s is the measurement value using solution 5.17 instead of solution 5.10 (see Clause 4), in system related unit.

For the explanation of the other symbols, see Equation (1).

Calculate samples according to the calibration range they fall into. Do not extrapolate a calibration curve beyond the working range selected.

10 Expression of results

Report the results as µg/l or mg/l to no more than 2 significant figures.

EXAMPLES

Cr(VI):	8,9 µg/l
Cr(VI):	1,5 mg/l

11 Test report

The test report shall specify the following:

a) reference to this International Standard (ISO 23913:2006);

b) identity of the sample;

c) outline of the procedure used;

d) analysis procedure used (CFA or FIA);

e) sample preparation, if any;

f) description of the equipment used (6.1 or 6.2);

g) results, according to Clause 10;

h) any deviation from this International Standard or any circumstances which might affected the result.

STANDARDSISO.COM : Click to view the full PDF of ISO 23913:2006

© ISO 2006 – All rights reserved

Annex A
(informative)

Examples of flow analysis systems for the determination of chromium(VI)

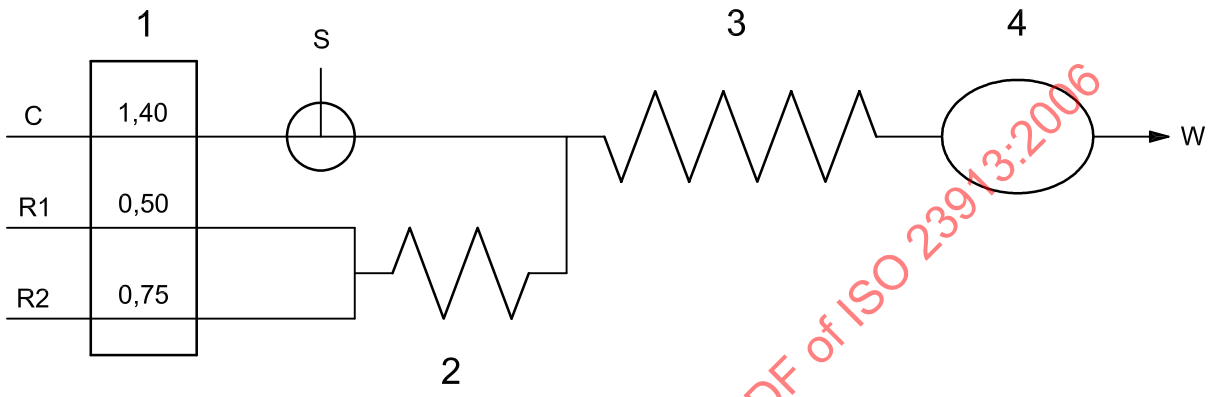

Key

1 pump; flow rates in millilitres per minute, ml/min

S sample injector; injected volumes:

200 µl for the working range 20 µg/l to 200 µg/l Cr;

30 µl for the working range 0,2 mg/l to 2 mg/l Cr

2 reaction coil, length: 100 cm, internal diameter: 0,5 mm

3 reaction coil, length: 150 cm, internal diameter: 0,5 mm

4 detector, wavelength: 544 nm ± 10 nm; optical path length: 10 mm

C carrier (5.11); flow rate 1,4 ml/min

R1 acid mixture for FIA (5.5.1); flow rate 0,5 ml/min

R2 diphenylcarbazide solution (5.10), or if the self absorbance of the sample y_s should be measured, solution 5.17 (see Clauses 4 and 9); flow rate 0,75 ml/min

W reaction mixture after measurement; pH < 1

Figure A.1 — Example of a FIA system for the determination of chromium(VI) in the concentration ranges 0,02 mg/l to 0,2 mg/l and 0,2 mg/l to 2 mg/l

STANDARDSISO.COM : Click to view the full PDF of ISO 23913:2006

© ISO 2006 – All rights reserved

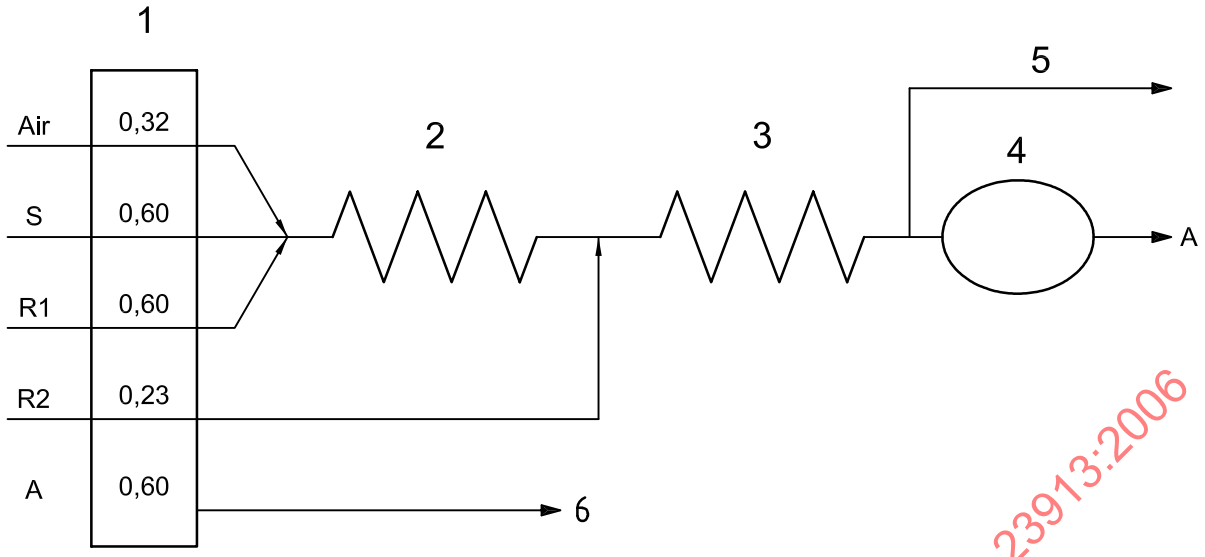

Key

1 pump; flow rates in millilitres per minute, ml/min

2 reaction coil, length: 200 cm, internal diameter: 2 mm

3 reaction coil, length: 150 cm, internal diameter: 2 mm

4 detector wavelength: 544 nm ± 10 nm, recommended optical path length: 50 mm

S sample; flow rate 0,60 ml/min

Air segmentation gas (e.g. air); flow rate 0,32 ml/min

R1 acid mixture for CFA (5.5.2); flow rate 0,60 ml/min

R2 diphenylcarbazide solution (5.10), or if the self absorbance of the sample y_s should be measured, solution 5.17 (see Clauses 4 and 9); flow rate 0,23 ml/min

A desegmented reaction mixture; flow rate 0,60 ml/min; pH < 1

5 waste 1: Reaction mixture containing air bubbles

6 waste 2: Reaction mixture without air bubbles; pH < 1

Figure A.2 — Example of a CFA system for the determination of chromium(VI) in the concentration range 20 µg/l to 200 µg/l Cr(VI)

STANDARDSISO.COM : Click to view the full PDF of ISO 23913:2006

© ISO 2006 – All rights reserved

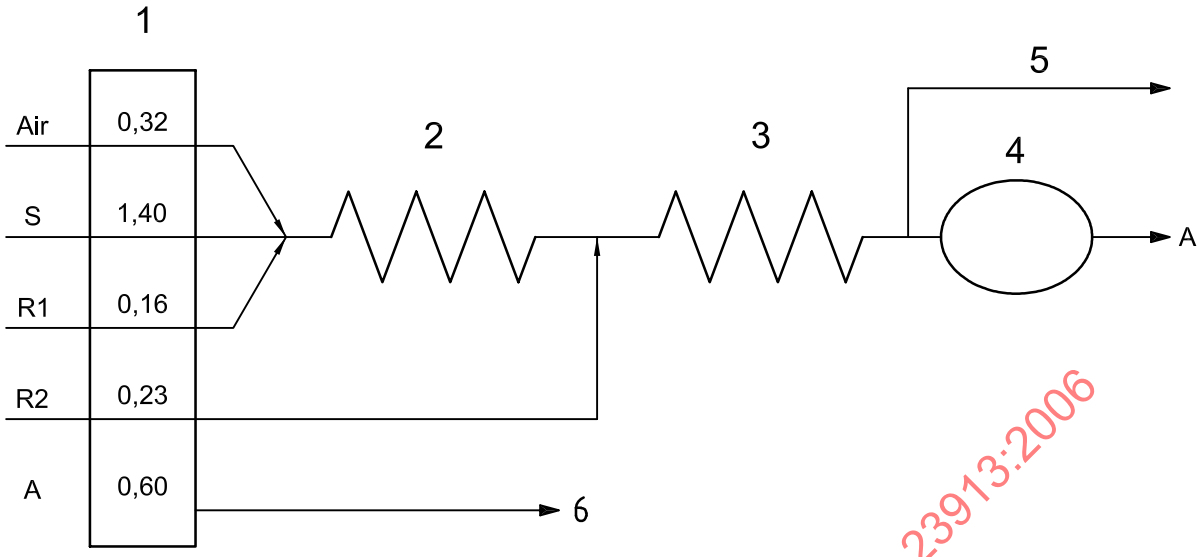

Key

1 pump; flow rates in millitres per minute, ml/min

2 reaction coil, length: 50 cm, internal diameter: 2 mm

3 reaction coil, length: 150 cm, internal diameter: 2 mm

4 detector wavelength: 544 nm ± 10 nm; optical path length: 50 mm

Air segmentation gas (e.g. air); flow rate 0,32 ml/min

S sample; flow rate 1,4 ml/min

R1 acid mixture for CFA (5.5.2); flow rate 0,16 ml/min

R2 diphenylcarbazide solution (5.10) or if the self absorbance of the sample y_S should be measured solution 5.17 (see Clauses 4 and 9); flow rate 0,23 ml/min

A desegmented reaction mixture; flow rate 0,60 ml/min, pH < 1

5 waste 1: Reaction mixture containing air bubbles

6 waste 2: Reaction mixture without air bubbles; pH < 1

Figure A.3 — Example of a CFA system for the determination of chromium(VI) in the concentration range 2 µg/l to 20 µg/l Cr(VI)

STANDARDSISO.COM : Click to view the full PDF of ISO 23913:2006

© ISO 2006 – All rights reserved