INTERNATIONAL STANDARD

ISO 24410

First edition
2005-04-15

Earth-moving machinery — Coupling of attachments to skid steer loaders

Engins de terrassement — Attelage des accessoires des chargeuses à direction articulée

STANDARDSISO.COM : Click to view the full PDF of ISO 24410:2005

Reference number
ISO 24410:2005(E)

© ISO 2005

PDF disclaimer

This PDF file may contain embedded typefaces. In accordance with Adobe's licensing policy, this file may be printed or viewed but shall not be edited unless the typefaces which are embedded are licensed to and installed on the computer performing the editing. In downloading this file, parties accept therein the responsibility of not infringing Adobe's licensing policy. The ISO Central Secretariat accepts no liability in this area.

Adobe is a trademark of Adobe Systems Incorporated.

Details of the software products used to create this PDF file can be found in the General Info relative to the file; the PDF-creation parameters were optimized for printing. Every care has been taken to ensure that the file is suitable for use by ISO member bodies. In the unlikely event that a problem relating to it is found, please inform the Central Secretariat at the address given below.

STANDARDSISO.COM : Click to view the full PDF of ISO 24410:2005

© ISO 2005

All rights reserved. Unless otherwise specified, no part of this publication may be reproduced or utilized in any form or by any means, electronic or mechanical, including photocopying and microfilm, without permission in writing from either ISO at the address below or ISO's member body in the country of the requester.

ISO copyright office
Case postale 56 • CH-1211 Geneva 20
Tel. + 41 22 749 01 11
Fax + 41 22 749 09 47
E-mail copyright@iso.org
Web www.iso.org

Published in Switzerland

Foreword

ISO (the International Organization for Standardization) is a worldwide federation of national standards bodies (ISO member bodies). The work of preparing International Standards is normally carried out through ISO technical committees. Each member body interested in a subject for which a technical committee has been established has the right to be represented on that committee. International organizations, governmental and non-governmental, in liaison with ISO, also take part in the work. ISO collaborates closely with the International Electrotechnical Commission (IEC) on all matters of electrotechnical standardization.

International Standards are drafted in accordance with the rules given in the ISO/IEC Directives, Part 2.

The main task of technical committees is to prepare International Standards. Draft International Standards adopted by the technical committees are circulated to the member bodies for voting. Publication as an International Standard requires approval by at least 75 % of the member bodies casting a vote.

Attention is drawn to the possibility that some of the elements of this document may be the subject of patent rights. ISO shall not be held responsible for identifying any or all such patent rights.

ISO 24410 was prepared by Technical Committee ISO/TC 127, *Earth-moving machinery*, Subcommittee SC 2, *Safety requirements and human factors*.

STANDARDSISO.COM : Click to view the full PDF of ISO 24410:2005

© ISO 2005 – All rights reserved

Earth-moving machinery — Coupling of attachments to skid steer loaders

1 Scope

This International Standard provides for the interchangeability of attachments on skid steer loaders by establishing dimensional limits for the attachment interface. It is applicable to skid steer loaders whose operating mass according to ISO 6165 is 4 500 kg or less. Narrow skid steer loaders may have a width that does not allow compliance. Its requirements do not restrict the design of the attachment bracket locking system, which is left to the discretion of the manufacturer. It is not applicable to attachment interface brackets connected to the attachment bracket by a lateral locking system.

2 Normative references

The following referenced documents are indispensable for the application of this document. For dated references, only the edition cited applies. For undated references, the latest edition of the referenced document (including any amendments) applies.

ISO 6165, *Earth-moving machinery — Basic types — Vocabulary*

ISO 6746-2, *Earth-moving machinery — Definitions of dimensions and codes — Part 2: Equipment and attachments*

3 Terms and definitions

For the purposes of this document, the terms and definitions given in ISO 6165 and ISO 6746-2 and the following apply.

3.1
attachment interface
attachment component that facilitates the quick mounting and removal of an attachment to the attachment bracket

3.2
attachment bracket
skid steer loader component that facilitates quick interchange of attachments

4 Mounting dimensions

The mounting dimensions for the attachment interface shall be as shown in Figures 1 to 4. The attachment shall only have components outside the described space.

STANDARDSISO.COM : Click to view the full PDF of ISO 24410:2005

© ISO 2005 – All rights reserved

The attachment bracket shall not protrude

— above surface A,

— forward of surface B, or

— below surface C

See Figure 4.

NOTE Some attachments could require added support structure to the attachment interface between surfaces A and B.

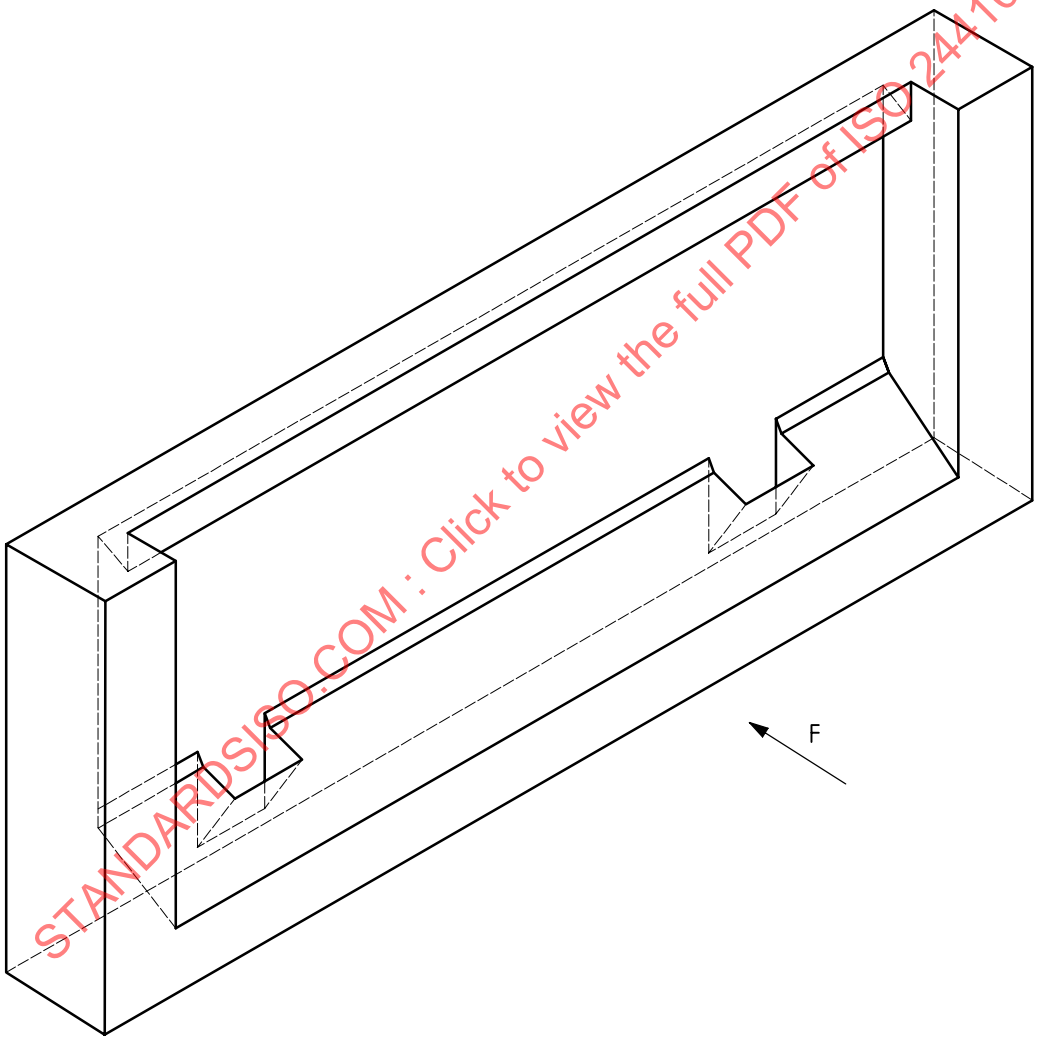

STANDARDSISO.COM : Click to view the full PDF of ISO 24410:2005

Key

F forward direction

Figure 1 — Attachment interface — Isometric view

© ISO 2005 – All rights reserved

Dimensions in millimetres

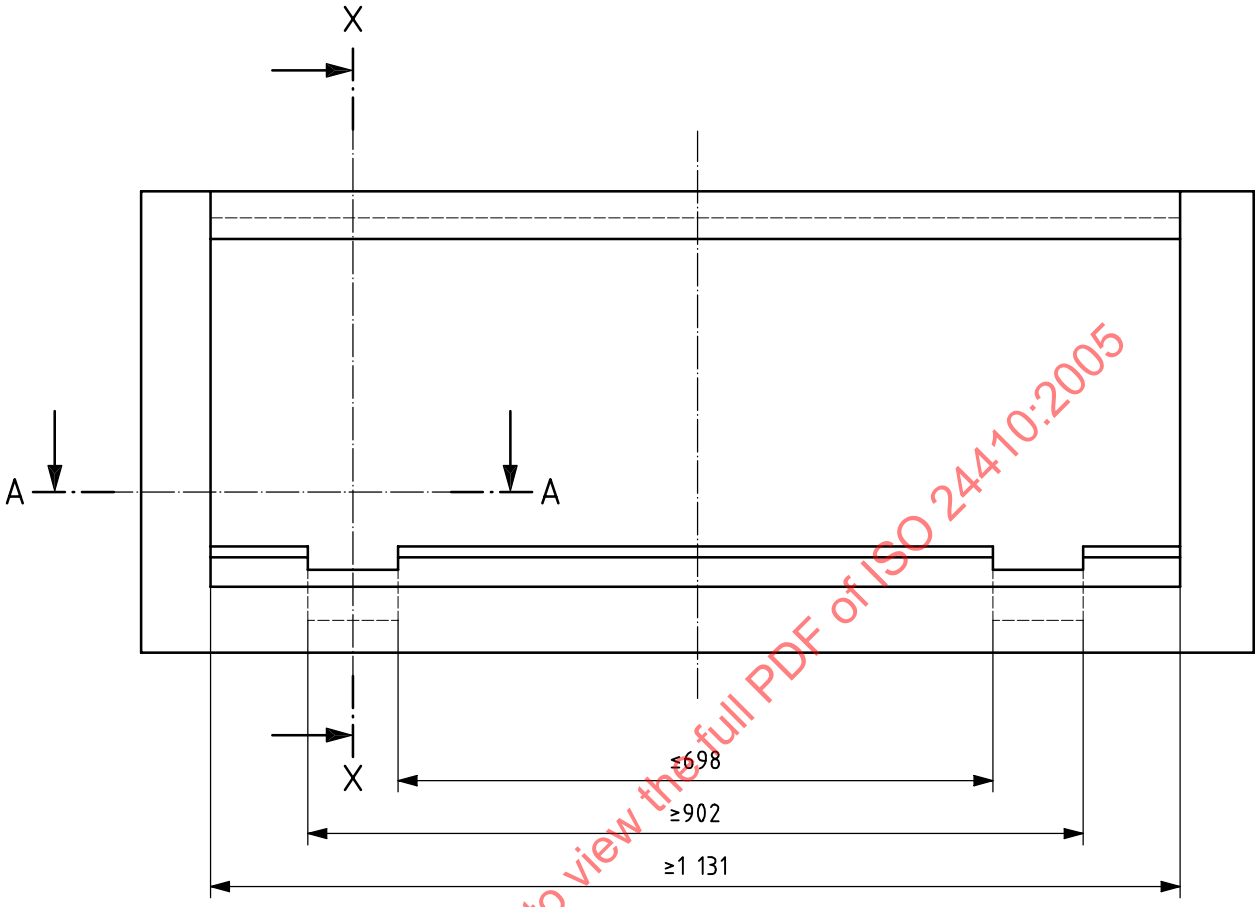

Figure 2 — Attachment interface — Rear view

Dimensions in millimetres

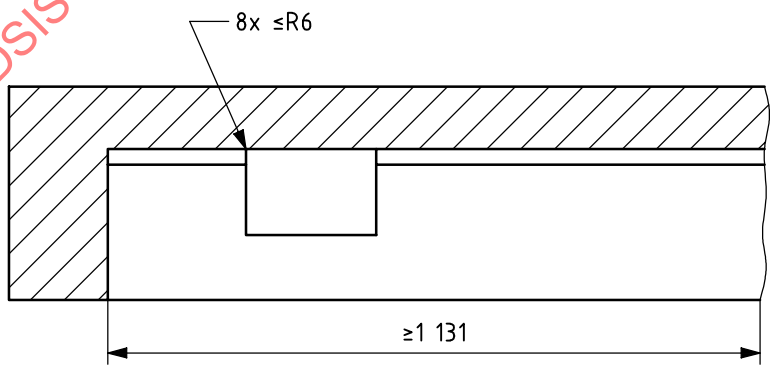

Figure 3 — Attachment interface — Section A–A (Figure 2)

STANDARDSISO.COM : Click to view the full PDF of ISO 24410:2005

© ISO 2005 – All rights reserved

Dimensions in millimetres

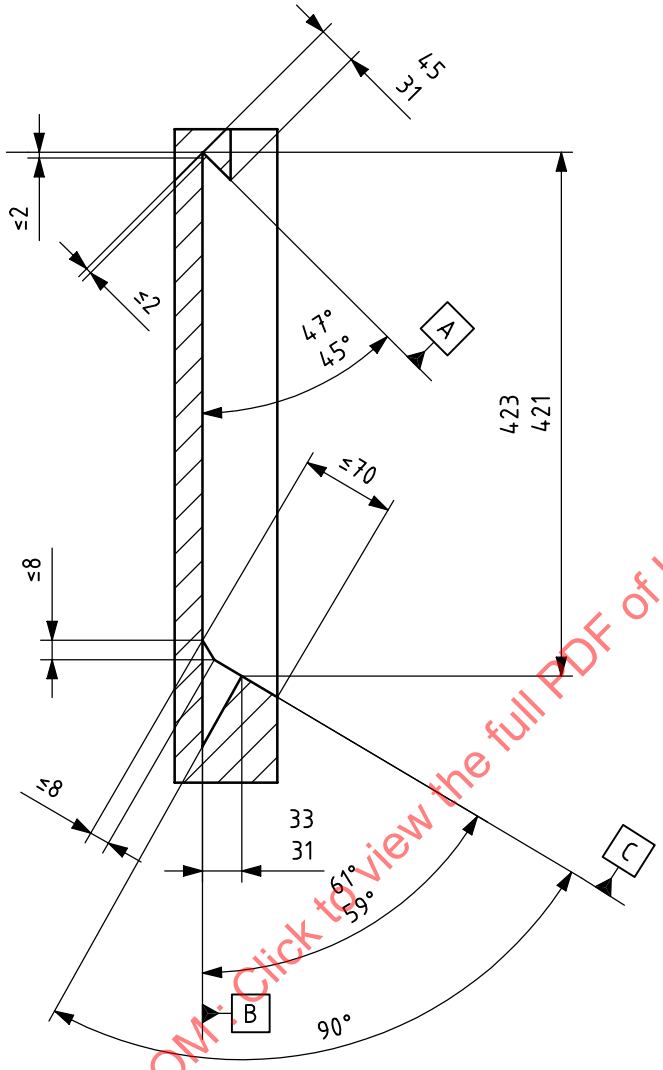

Figure 4 — Attachment interface — Section X–X (Figure 2)

STANDARDSISO.COM : Click to view the full PDF of ISO 24410:2005

© ISO 2005 – All rights reserved