INTERNATIONAL STANDARD

ISO 29845

First edition
2011-09-01

Technical product documentation — Document types

Documentation technique de produits — Types de document

STANDARDSISO.COM : Click to view the full PDF of ISO 29845:2011

Reference number
ISO 29845:2011(E)

© ISO 2011

STANDARDSISO.COM : Click to view the full PDF of ISO 29845:2011

COPYRIGHT PROTECTED DOCUMENT

© ISO 2011

All rights reserved. Unless otherwise specified, no part of this publication may be reproduced or utilized in any form or by any means, electronic or mechanical, including photocopying and microfilm, without permission in writing from either ISO at the address below or ISO's member body in the country of the requester.

ISO copyright office
Case postale 56 • CH-1211 Geneva 20
Tel. + 41 22 749 01 11
Fax + 41 22 749 09 47
E-mail copyright@iso.org
Web www.iso.org

Published in Switzerland

Contents

Page

Foreword iv
Introduction v
1 Scope 1
2 Normative references 1
3 Terms and definitions 1
3.1 General 1
3.2 Document types 3
4 Forms of presentation 7
4.1 General 7
4.2 Drawing 9
4.3 Model 23
4.4 Diagram 29
4.5 Chart 37
4.6 Graph 39
4.7 List 41
4.8 Textual 48
Bibliography 59

STANDARDSISO.COM : Click to view the full PDF of ISO 29845:2011

© ISO 2011 – All rights reserved

Foreword

ISO (the International Organization for Standardization) is a worldwide federation of national standards bodies (ISO member bodies). The work of preparing International Standards is normally carried out through ISO technical committees. Each member body interested in a subject for which a technical committee has been established has the right to be represented on that committee. International organizations, governmental and non-governmental, in liaison with ISO, also take part in the work. ISO collaborates closely with the International Electrotechnical Commission (IEC) on all matters of electrotechnical standardization.

International Standards are drafted in accordance with the rules given in the ISO/IEC Directives, Part 2.

The main task of technical committees is to prepare International Standards. Draft International Standards adopted by the technical committees are circulated to the member bodies for voting. Publication as an International Standard requires approval by at least 75 % of the member bodies casting a vote.

Attention is drawn to the possibility that some of the elements of this document may be the subject of patent rights. ISO shall not be held responsible for identifying any or all such patent rights.

ISO 29845 was prepared by Technical Committee ISO/TC 10, *Technical product documentation*, Subcommittee SC 1, *Basic conventions*.

STANDARDSISO.COM : Click to view the full PDF of ISO 29845:2011

© ISO 2011 – All rights reserved

Introduction

The figures in this International Standard are intended only as illustrations to aid the user in understanding the practices elaborated in the text. In some cases, the figures show the level of detail needed for emphasis; in others, they are only complete enough to illustrate a concept or facet thereof. The absence of figures has no bearing on the applicability of the specified requirement or practice.

STANDARDSISO.COM : Click to view the full PDF of ISO 29845:2011

© ISO 2011 – All rights reserved

STANDARDSISO.COM : Click to view the full PDF of ISO 29845:2011

Technical product documentation — Document types

1 Scope

This International Standard establishes and defines the types of documents required to be in the documentation for the specification of products, equipment and plants at all levels of complexity. It deals with the range of document types used from the conceptual phase to finished product, in all engineering fields.

The purpose of this International Standard is

— to facilitate a structure for (data modelling) product data management systems,

— to facilitate searching and retrieval of documents,

— to establish document types for the purpose of better communication and understanding between parties involved in document interchange, and

— to fulfil the requirement in ISO 7200:2004 regarding document type fields.

NOTE The figures in this International Standard are intended only as illustrations to aid the user in understanding the document types described by the text. Consequently, the figures are simplified in such a way that the content presented in illustrated document types may not always apply all ISO rules regarding the presentation of drawings and other types of documents.

2 Normative references

The following referenced documents are indispensable for the application of this document. For dated references, only the edition cited applies. For undated references, the latest edition of the referenced document (including any amendments) applies.

ISO 7200:2004, *Technical product documentation — Data fields in title blocks and document headers*

3 Terms and definitions

For the purposes of this document, the following terms and definitions apply.

3.1 General

3.1.1
document
fixed and structured amount of information that can be managed and interchanged as a unit between users and systems

[ISO 11442:2006, 3.10]

3.1.2
documentation
collection of documents related to a given subject

[IEC 82045-1, 2001]

STANDARDSISO.COM : Click to view the full PDF of ISO 29845:2011

© ISO 2011 – All rights reserved

3.1.3
document type
document defined with respect to its specified content of information, function and form of presentation

NOTE Adapted from IEC 61082-1:2006.

3.1.4
object
entity treated in the process of design, engineering, realisation, operation, maintenance and demolition

[ISO 15519-1:2010, 3.3.2]

3.1.5
product
intended or accomplished result of labour, or of a natural or artificial process

[IEC 82045-1:2001]

NOTE 1 A product usually has a part number, type designation, and/or a name.

NOTE 2 A technical system, building, plant or services can be considered as a product.

3.1.6
drawing
technical information, given on an information carrier, graphically presented in accordance with agreed rules and usually to scale

[ISO 10209-1:1992, 2.11]

3.1.7
model
three-dimensional physical or digital description of the ideal shape of an object

3.1.8
design model
portion of the data set that contains model and supplemental geometry

[ISO 16792:2006, 3.10]

3.1.9
diagram
technical document showing the functions of the objects composing a system and their interrelations using graphical symbols

3.1.10
chart
document of information in the form of a table, graph, or diagram

3.1.11
graph
diagram showing the relation between variable quantities, typically of two variables, each measured along a pair of lines at right angles

3.1.12
list
document in which the information is presented in columns and rows

STANDARDSISO.COM : Click to view the full PDF of ISO 29845:2011

 © ISO 2011 – All rights reserved

3.1.13
sketch
drawing prepared freehand or in a CAD system and not necessarily to scale

3.1.14
textual
presentation form using characters, for example in written instructions and descriptions

3.1.15
report
account given of a matter after investigation or consideration

3.2 Document types

3.2.1
part drawing
drawing depicting a single part which cannot be further disassembled and which includes all the necessary information required for the definition of the part

[ISO 10209-1:1992, 3.16]

3.2.2
assembly drawing
drawing representing the relative position and/or shape of a group of assembled parts

[ISO 10209-1:1992, 3.2]

3.2.3
tabular drawing
drawing listing differing variations of a specific configuration using a single, common illustration

3.2.4
fabrication drawing
part drawing of an assembly of fully specified items, permanently joined together

3.2.5
installation drawing
drawing showing the general configuration of an item and the necessary information to install the item relative to its mating structures or associated items

[ISO 10209-1:1992, 3.16]

3.2.6
layout drawing
drawing showing the location of sites, structures, buildings, spaces, elements, assemblies or components

[ISO 10209-1:1992,3.13]

3.2.7
interface drawing
drawing giving information for the assembly and matching of two parts, concerning, for example, their dimensions, configuration limitations, performance and test requirements

[ISO 10209-1:1992, 3.11]

STANDARDSISO.COM : Click to view the full PDF of ISO 29845:2011

© ISO 2011 – All rights reserved

3.2.8
outline drawing
drawing giving the outside peripheral envelope, overall dimensions and mass of an object

NOTE Adapted from ISO 10209-1:1992.

3.2.9
supplier drawing
drawing defining a part developed and owned by an external supplier

3.2.10
illustration drawing
drawing showing figures and sketches for any general purpose which is not covered by the more specific document types

3.2.11
space envelope drawing
drawing showing the maximum space which can occupied for an intended design solution and the geometrically significant interfaces of components and assemblies which are not yet designed in detail

3.2.12
block plan
drawing which identifies a site and locates the outlines of construction works in relation to a town plan or similar document

[ISO 10209-1:1992, 3.3]

3.2.13
site plan
layout drawing giving the position of construction works in relation to the setting out points, the means of access and the general layout of a site

NOTE Adapted from ISO 10209-1:1992.

3.2.14
part model
model in which the product described is one single item

3.2.15
assembly model
model in which the product described is an assembly of two or more items

[ISO 16792:2006, 3.3]

3.2.16
installation model
model in which the product described is an installation, showing parts or assemblies and a partial or complete representation of the installation site

[ISO 16792:2006, 3.17]

3.2.17
interference model
model that shows the overall geometry and the space required as well as possible collisions

3.2.18
space envelope model
model showing the maximum space which can occupied for an intended design solution and the geometrically significant interfaces of components and assemblies which are not yet designed in detail

STANDARDSISO.COM : Click to view the full PDF of ISO 29845:2011

 © ISO 2011 – All rights reserved

3.2.19
annotated design model
combination of design model, annotation and attributes that describes a product

3.2.20
overview diagram
diagram providing a comprehensive view of an object with low degree of detailing

3.2.21
network map
overview diagram showing a network on a map

[ISO 14617-15:2002, 3.2]

3.2.22
block diagram
overview diagram predominantly using block symbols

[ISO 10209-4:1999, 5.15.8.1]

3.2.23
network diagram
overview diagram which shows the connections between different kinds of installations for transmitting of electricity, fluids (e.g. water, gas) or heating/cooling, sewage system, telecommunications, equipment, etc.

NOTE Adapted from ISO 10209-4:1999.

3.2.24
circuit diagram
diagram providing information about the circuitry of an object(s)

[ISO 15519-1:2010, 3.2.8]

3.2.25
function diagram
diagram providing information about the functional behaviour of a system

[ISO 15519-1:2010, 3.2.7]

3.2.26
process flow diagram
diagram illustrating the configuration of a process system or process plant by means of graphical symbols

[ISO 15519-1:2010, 3.2.6]

3.2.27
piping and instrumentation diagram
P&I diagram
process flow diagram representing the technical realization of a process system by means of graphical symbols for equipment, connections and process measurement and control functions

[ISO 15519-1:2010, 3.2.9]

3.2.28
angular chart
chart showing the relation between the angular position of an object and the function

STANDARDSISO.COM : Click to view the full PDF of ISO 29845:2011

© ISO 2011 – All rights reserved

3.2.29
structure diagram
chart which shows the relation between different objects in a system or a product from different points of view presented graphically as a hierarchical tree

3.2.30
graph
diagram showing the relation between variable quantities, typically of two variables, each measured along a pair of lines at right angles

3.2.31
parts list
list of elements of an object(s)

[ISO 15519-1:2010, 3.2.11]

3.2.32
document list
formally built-up inventory in which all relevant documents for a specific purpose are listed

3.2.33
bill-of-material
BOM
presentation of the constituents in a product structure with the possibility to adopt the level of decomposition to actual need

3.2.34
signal list
list providing information about signals defined as input or output of functional units

3.2.35
coordinate data list
list providing information about certain positions on a part represented in a Cartesian coordinate system

3.2.36
apparatus list
list providing information about the constituent functional components included in a system

3.2.37
connection table
connection table lists the connections on different levels, internal and external, of the installation

3.2.38
standard
document established by consensus and approved by a recognized body, that provides, for common and repeated use, rules, guidelines and characteristics or their results, aimed at the achievement of the optimum degree of order in a given context

[ISO/IEC Guide 2:2004, 3.2]

3.2.39
technical specification
document specifying the requirements for one specific part or for a group of parts with equal characteristics

3.2.40
requirement specification
document compiled and evaluated with the requirements from the markets (customer), authorities, and the company itself

STANDARDSISO.COM : Click to view the full PDF of ISO 29845:2011

 © ISO 2011 – All rights reserved

3.2.41
part definition
text-based document that may be supplied with a drawing image of the defined part, specifying property requirements for the part described by the document

3.2.42
calculation sheet
document providing the results of calculations regarding essential product characteristics

3.2.43
process specification
document that defines the type and sequence of steps of a process used to produce a part

3.2.44
assembly instruction
document providing information of how and in what sequence the different part shall be assembled to receive a specific end product

3.2.45
test specification
specification explaining how to perform the test activities according to the test plan

3.2.46
test plan
document describing the scope realization resources and plans for the intended test activities

3.2.47
quality plan
document defining a set of activities planned that helps achieve quality in the project being executed

3.2.48
test report
compilation of tests carried out at a new part, assembly, product or system and documentation of test results

4 Forms of presentation

4.1 General

The forms of presentation identified in Table 1 are the main types of documents used in the field of engineering. The table also shows where the documents are commonly used. However, the document types can also occur in other technical areas than those shown in Table 1 depending on company standards, technical discipline, etc.

STANDARDSISO.COM : Click to view the full PDF of ISO 29845:2011

© ISO 2011 – All rights reserved

Table 1 — Presentation formats

Presentation format	Description	Application[a]
1 Drawing	Graphical presentation depicting the shape, size, etc. of a physical part or assembly, usually to scale	A
2 Model	Three-dimensional physical or digital description of the ideal shape of an object.	A
3 Diagram	Graphical presentation showing the functions of the objects composing a system and their interrelations using graphical elements and symbols	A
4 Chart	Document of information in the form of a table, graph, or diagram.	B, D
5 Graph	Diagram showing the relation between variable quantities, typically of two variables, each measured along a pair of lines at right angles.	B, D
6 List	Document in which the information is presented in columns and rows	A
7 Textual	Presentation form using characters, for example in written instructions and descriptions	A

[a] See Table 2.

The application code identifies the technical area in which the presentation format is used.

Table 2 — Application codes

Code	Technical area
A	overall technology
B	construction engineering (building construction and civil engineering
C	mechanical engineering
D	process plant engineering

NOTE The figures in the following subclauses are typical examples of the described document types. The information in the title blocks is identical throughout this International Standard except for the document types and titles.

STANDARDSISO.COM : Click to view the full PDF of ISO 29845:2011

© ISO 2011 – All rights reserved

4.2 Drawing

4.2.1 Part drawing

A part drawing (see Figure 1) depicts a single part which cannot be further disassembled. The drawing includes information required for the definition of the part, e.g. material properties, dimensions, tolerances, surface texture.

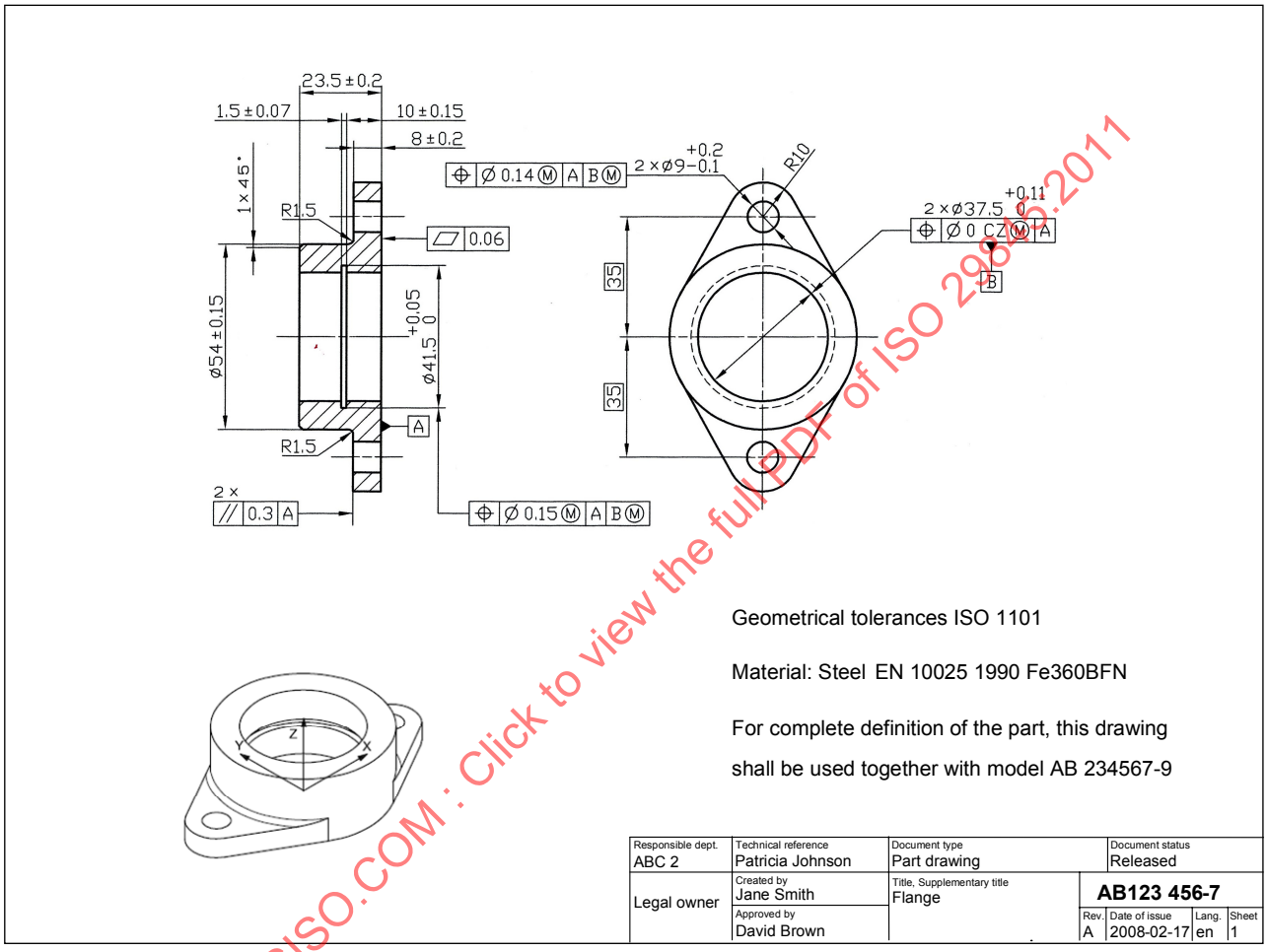

Figure 1 — Part drawing

Examples of part drawings from the construction field include the following:

— a **detail drawing** which can show the appearance and properties of a part as well as its relation to and mounting with other parts;

— a **manufacturing drawing**, e.g. for beams, columns, floor slabs or other structural elements.

STANDARDSISO.COM : Click to view the full PDF of ISO 29845:2011

4.2.2 Assembly drawing

An assembly drawing (see Figure 2) is a drawing representing the relative position and/or shape of a group of assembled parts. It depicts the constituents of a parts list. Relevant information may be added.

The list of parts is normally provided in a separate document, i.e. a parts list, but it can be included within the drawing.

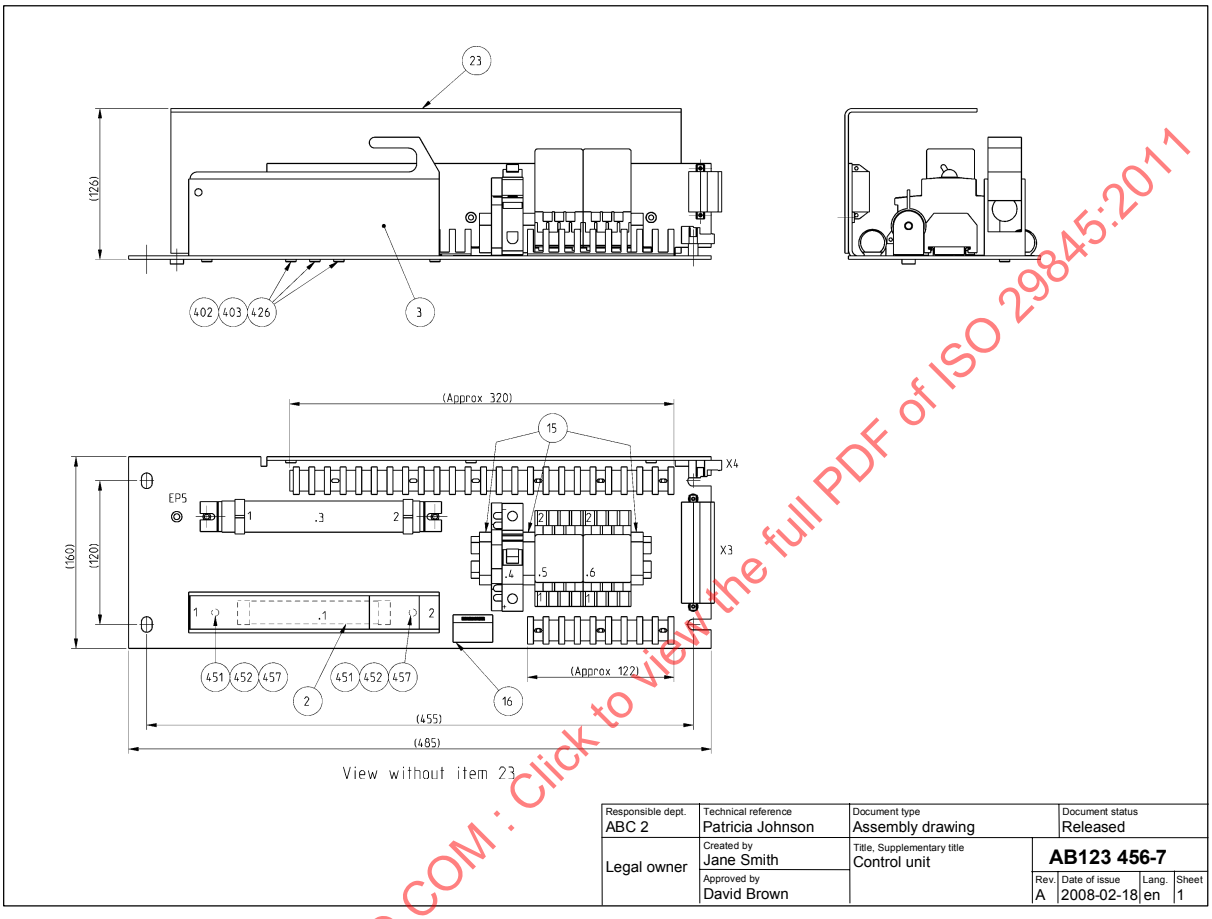

Figure 2 — Assembly drawing

Examples of assembly drawings from the construction field include the following:

— a **general arrangement drawing** (showing an entire building or a technical system within a building, such as the structural system or the ventilation system);

— an **assembly drawing** (showing a more limited assembly, such as a kitchen);

— a **dimensional drawing** (specifiing dimensions necessary for construction or production, sometimes used for separating dimensions from the drawing that specifies identities/types of parts, especially for architectural and structural drawings).

STANDARDSISO.COM : Click to view the full PDF of ISO 29845:2011

© ISO 2011 – All rights reserved

4.2.3 Tabular drawing

A tabular drawing (see Figure 3) uses a method of dimensioning that enables a series of variable common features of a part or assembly to be presented in a tabular form.

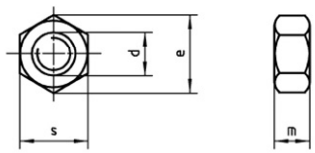

Extended data

Standard: ISO 4032
Material: A4 stainless steel
Property class: 80
Surface: Waxed 5-10 µm

d	Identity	m	e	s	Mass (kg)
M3	2126 359-111	2,4	6,01	5,5	0,001
M4	2126 359-113	3,2	7,66	7	0,001
M5	2126 359-114	4,7	8,79	8	0,002
M6	2126 359-116	5,2	11,05	10	0,002
M8	2126 359-117	6,8	14,38	13	0,005
M10	2126 359-120	8,4	17,77	16	0,010
M12	2126 359-122	10,8	20,03	18	0,016
M16	2126 359-124	14,8	26,75	24	0,038
M20	2126 359-126	18	32,95	30	0,073
M24	2126 359-128	21,5	39,55	36	0,124
M30	2126 359-130	25,6	50,85	46	0,238
M36	2126 359-132	31	60,79	55	0,420

Responsible dept.	Technical reference	Document type	Document status
ABC 2	Patricia Johnson	Tabular drawing	Released
Legal owner	Created by: Jane Smith	Title, Supplementary title: Hexagon nut, waxed Stainless steel	AB123 456-7
	Approved by: David Brown		Rev. A; Date of issue 2008-02-17; Lang. en; Sheet 1

Figure 3 — Tabular drawing

An example of a tabular drawing from the construction field is a **component schedule**. This often covers a number of variants that have a general type in common, but differ both in geometrical specification and other features. For example, a door schedule may cover all steel doors, both single- and double-swing variants. Some subtypes are given below:

— a door schedule;

— a window schedule;

— a bar schedule.

STANDARDSISO.COM : Click to view the full PDF of ISO 29845:2011

4.2.4 Fabrication drawing

A fabrication drawing (see Figure 4) is a part drawing of an assembly of items permanently joined together, e.g. by welding, soldering or adhesive. The constituents shall be fully specified.

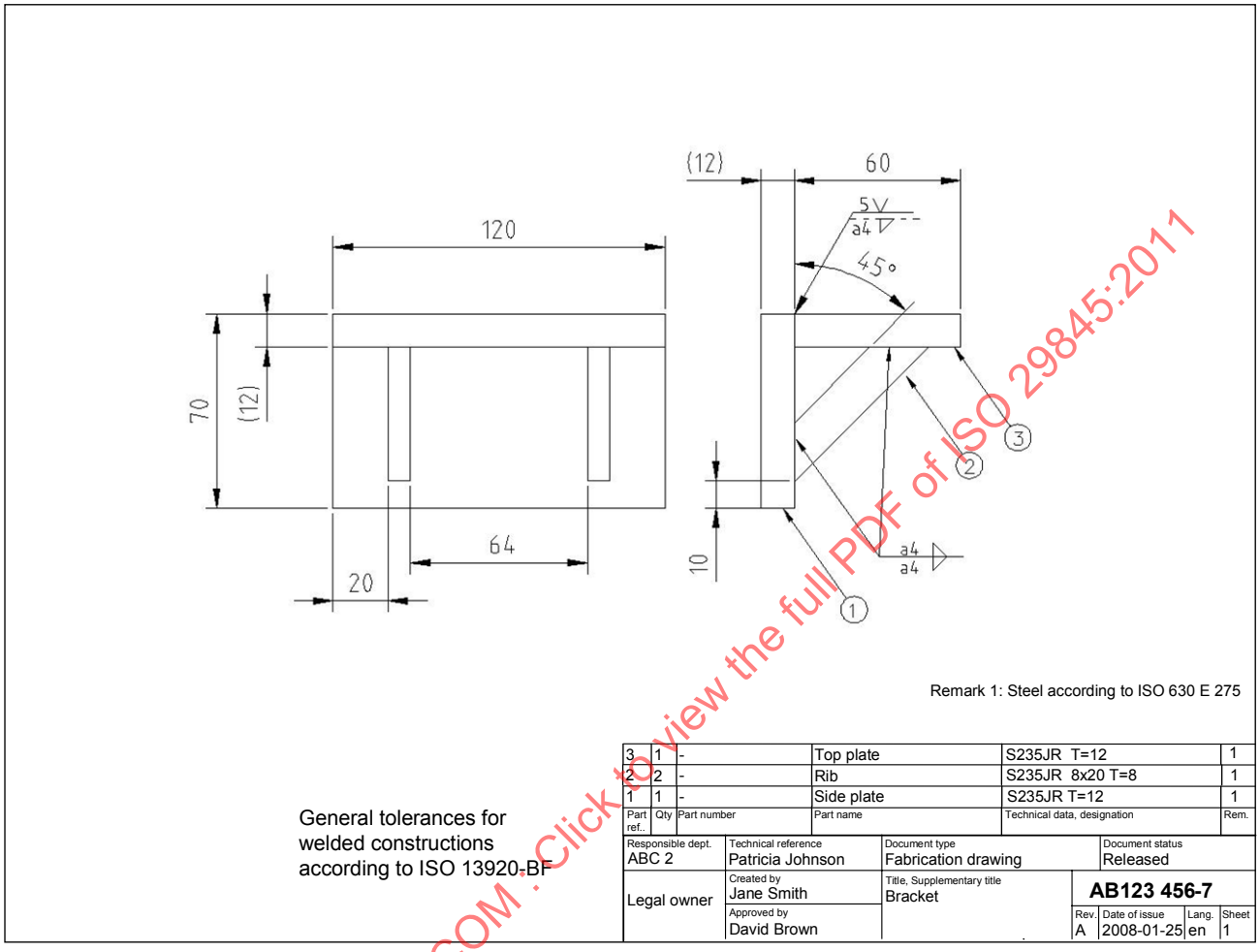

Figure 4 — Fabrication drawing

An example of a fabrication drawing from the construction field is a **manufacturing drawing** for welded components such as banisters or railings. The subdivision of manufacturing drawings normally just depends on which manufacturer supplies the part or assembly, not on the method of fabrication, such as whether items are permanently joined together.

STANDARDSISO.COM : Click to view the full PDF of ISO 29845:2011

© ISO 2011 – All rights reserved

4.2.5 Installation drawing

An installation drawing (see Figure 5) shows the general configuration of an item and the necessary information to install the item relative to its mating structures or associated items.

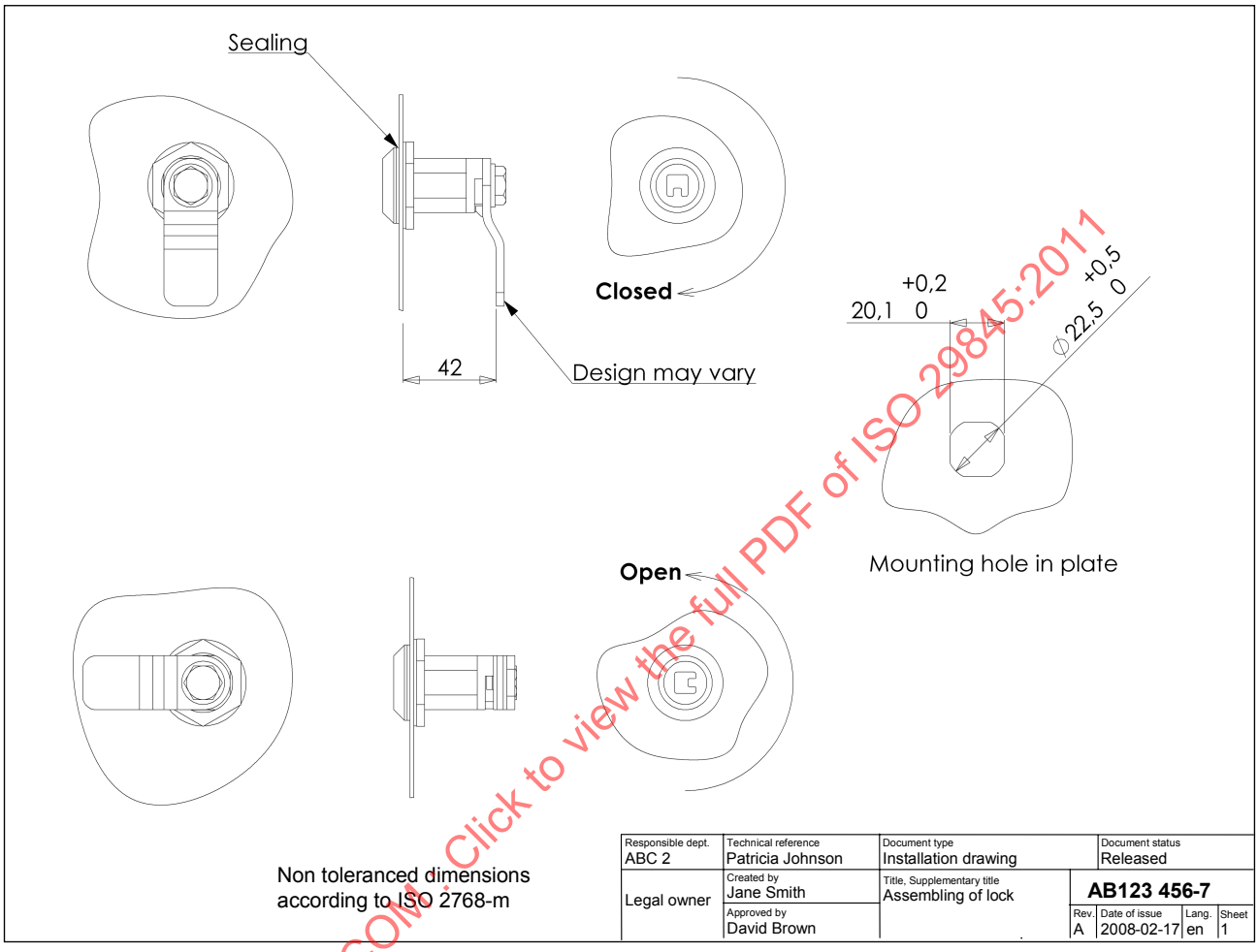

Figure 5 — Installation drawing

An example of an installation drawing from the construction field is a **detail drawing**. This can show the appearance and properties of a part as well as its relation to and mounting with other parts, cf. 4.2.1.

STANDARDSISO.COM : Click to view the full PDF of ISO 29845:2011

© ISO 2011 – All rights reserved

4.2.6 Layout drawing

A layout drawing (see Figure 6) shows the location of sites, structures, buildings, spaces, elements, assemblies or components. It may also show the important parts of a design and their technical and functional interrelation.

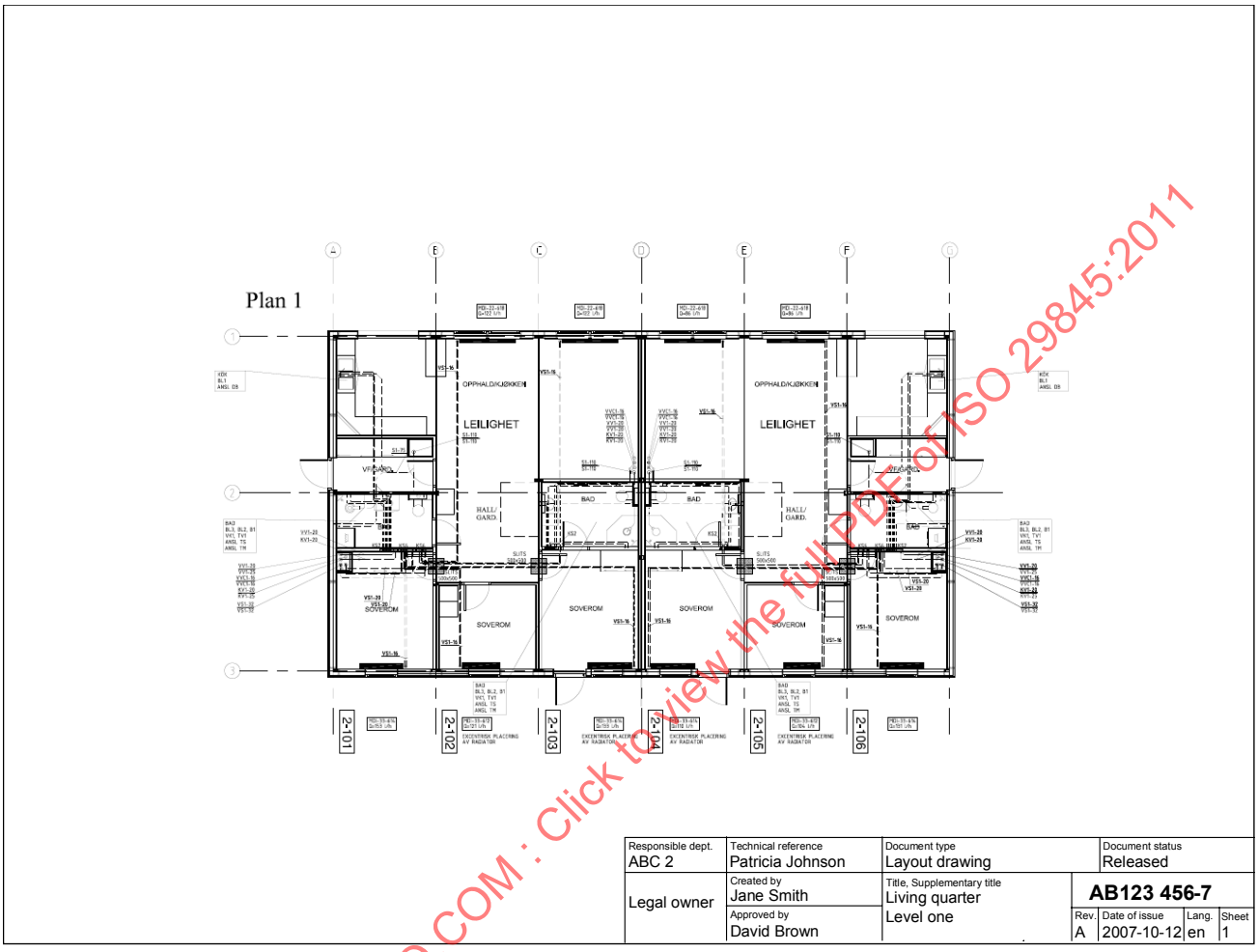

Figure 6 — Layout drawing

An example of a layout drawing from the construction field is a **general arrangement drawing**. The illustration shows one type of general arrangement drawing; elevations/facades and sections are other common types. General arrangement drawings are mostly specific to technical disciplines, e.g. architectural, structural, water and sewage, HVAC, power and lighting, alarm, data networks, furnishing, catering and fire protection.

STANDARDSISO.COM : Click to view the full PDF of ISO 29845:2011

© ISO 2011 – All rights reserved

4.2.7 Interface drawing

An interface drawing (see Figure 7) gives information for the assembly and matching of two parts, concerning, for example, their dimensions, configuration limitations, performance and test requirements.

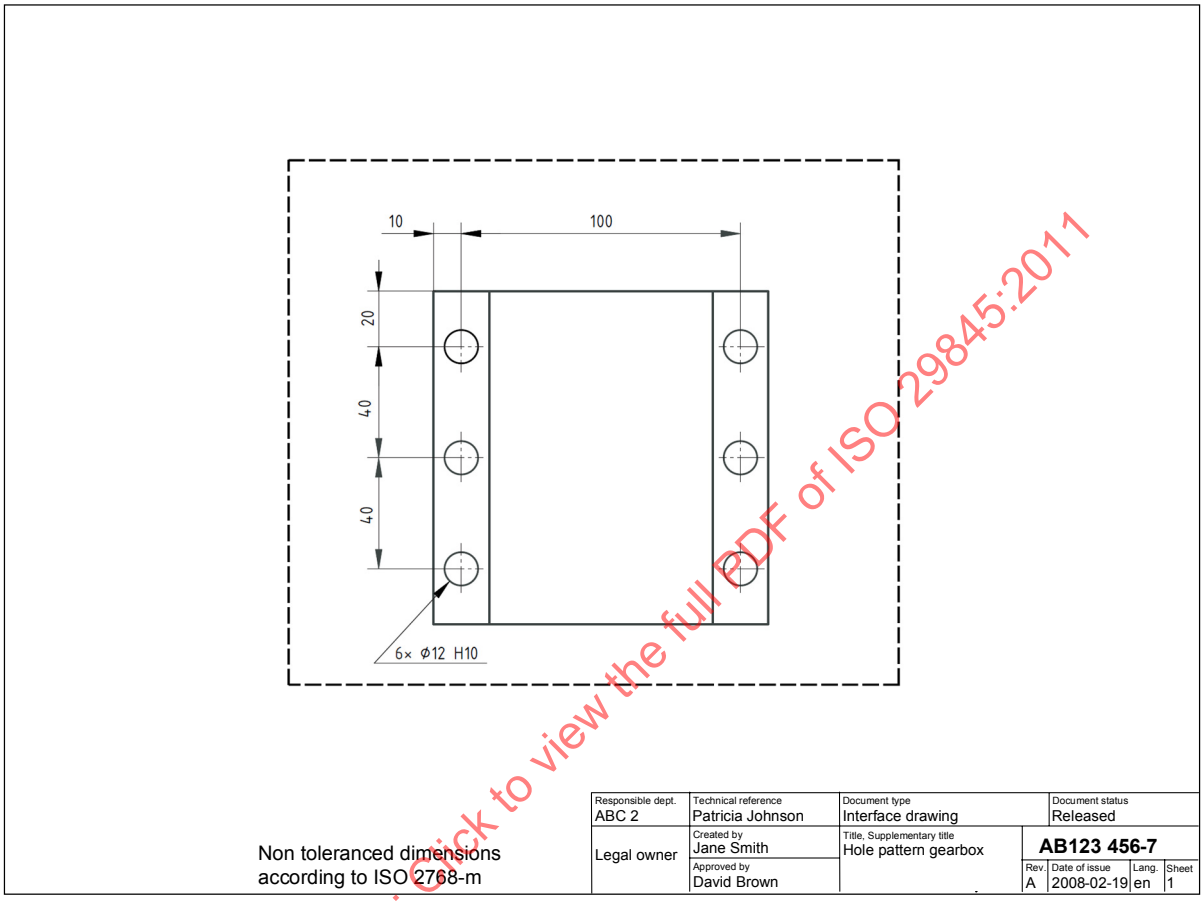

Figure 7 — Interface drawing

This type of drawing is not directly applicable to construction. Interfaces such as hole patterns may be included in detail drawings or manufacturing drawings.

STANDARDSISO.COM : Click to view the full PDF of ISO 29845:2011

© ISO 2011 – All rights reserved

4.2.8 Outline drawing

An outline drawing (see Figure 8) provides the outside peripheral envelope, overall dimensions and the mass of an object, used in the determination of packaging and transportation requirements.

Damping ratio: 30 kNs / m

Mass: 30 kg

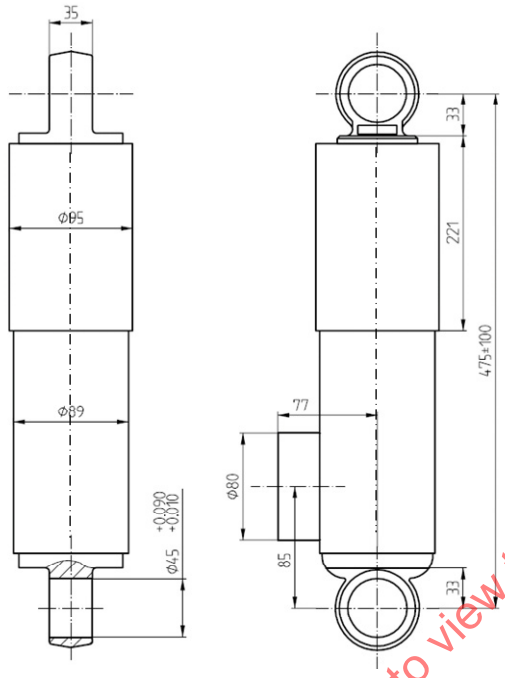

Responsible dept. ABC 2	Technical reference Patricia Johnson	Document type Outline drawing	Document status Released
Legal owner	Created by Jane Smith	Title, Supplementary title Hydraulic damper	AB123 456-7
	Approved by David Brown		Rev. A / Date of issue 2008-02-19 / Lang. en / Sheet 1

Figure 8 — Outline drawing

STANDARDSISO.COM : Click to view the full PDF of ISO 29845:2011

© ISO 2011 – All rights reserved

4.2.9 Supplier drawing

A supplier drawing (see Figure 9) defines a part developed and owned by an external supplier; it can be redrawn [see Figure 9 a)], or pasted on the using company's drawing sheet [see Figure 9 b)].

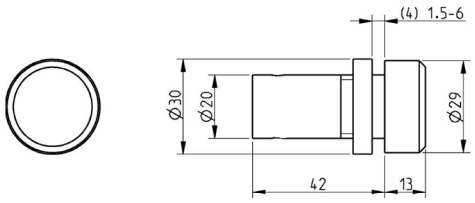

Mass	0,023 kg
Mounting hole	22,5 mm
Rated voltage	110-130 V
Kind of current	AC
Rated current	15 mA
Colour	Green
Luminance	126 mcd
Wave length	520 nm
Protection class	IP 65
Service life	< 50 000 h

Manufacturer	AAA Company
Type designation	BCD

Responsible dept.	Technical reference	Document type	Document status
ABC 2	Patricia Johnson	Supplier drawing	Released
Legal owner	Created by: Jane Smith Approved by: David Brown	Title, Supplementary title: Pilot light	AB123 456-7 Rev. A, Date of issue 2008-02-19, Lang. en, Sheet 1

a) Supplier drawing (redrawn)

Figure 9 — Supplier drawings *(continued on next page)*

STANDARDSISO.COM : Click to view the full PDF of ISO 29845:2011

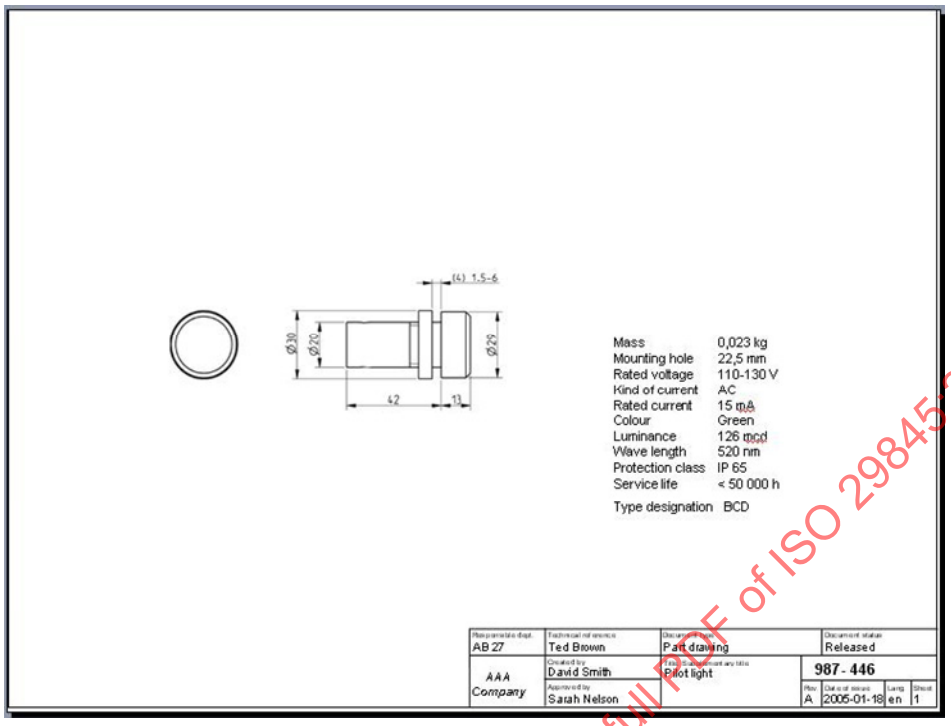

Responsible dept.	Technical reference	Document type	Document status
ABC 2	Patricia Johnson	Supplier drawing	Released
Legal owner	Created by: Jane Smith	Title, Supplementary title: Pilot light	AB123 456-7
	Approved by: David Brown		Rev. A; Date of issue 2008-02-19; Lang. en; Sheet 1

b) Supplier drawing (pasted)

Figure 9 — Supplier drawings

An example of a supplier drawing from the construction field is a **manufacturing drawing.**

STANDARDSISO.COM : Click to view the full PDF of ISO 29845:2011

© ISO 2011 – All rights reserved

4.2.10 Illustration drawing

An illustration drawing (see Figure 10) shows figures and sketches for any general purpose which is not covered by the more specific document types such as assembly drawing, outline drawing, etc.

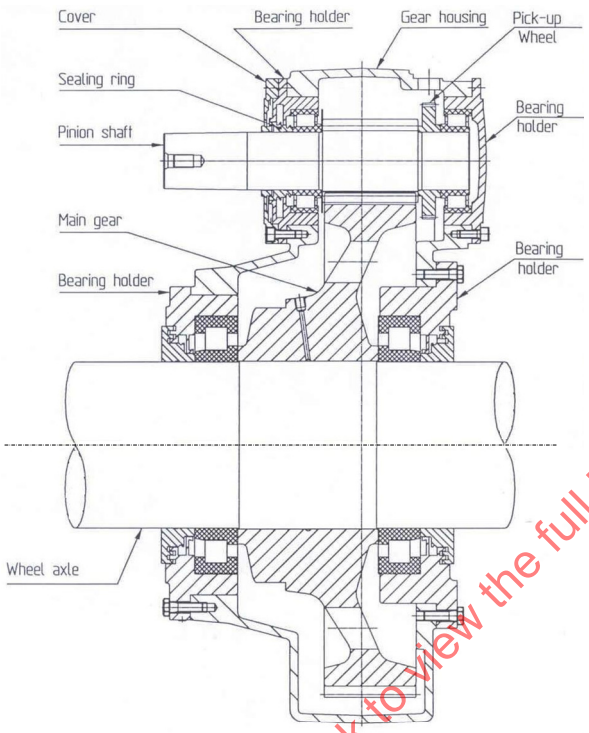

Responsible dept.	Technical reference	Document type	Document status
ABC 2	Patricia Johnson	Illustration drawing	Released
Legal owner	Created by: Jane Smith Approved by: David Brown	Title, Supplementary title: Gearbox	AB123 456-7 Rev. A · Date of issue 2008-02-19 · Lang. en · Sheet 1

Figure 10 — Illustration drawing

Examples of illustration drawings from the construction field include the following:

— a **pattern drawing**;

— a **masonry drawing**.

STANDARDSISO.COM : Click to view the full PDF of ISO 29845:2011

4.2.11 Space envelope drawing

A space envelope drawing (see Figure 11) is used for communication between one responsible unit or company and another.

The drawing shows maximum space which can be occupied for an intended design solution and the geometrically significant interfaces of components and assemblies which are not yet designed in detail.

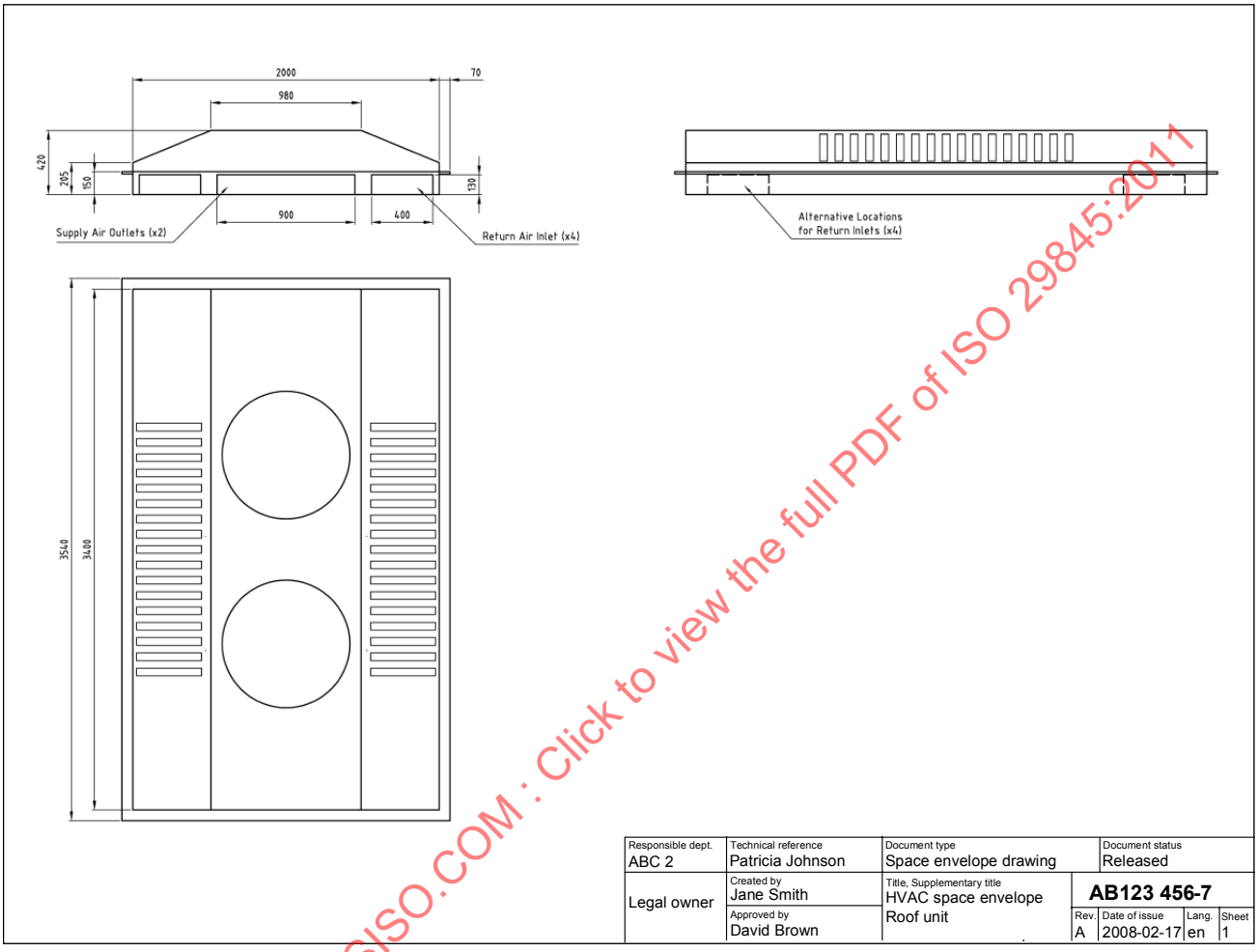

Figure 11 — Space envelope drawing

This type of drawing is not directly applicable to construction. Such information may be included in a **coordination drawing**.

STANDARDSISO.COM : Click to view the full PDF of ISO 29845:2011

© ISO 2011 – All rights reserved

4.2.12 Block plan

A block plan (see Figure 12) is a drawing which identifies a site and locates the outlines of construction works in relation to a town plan or similar document.

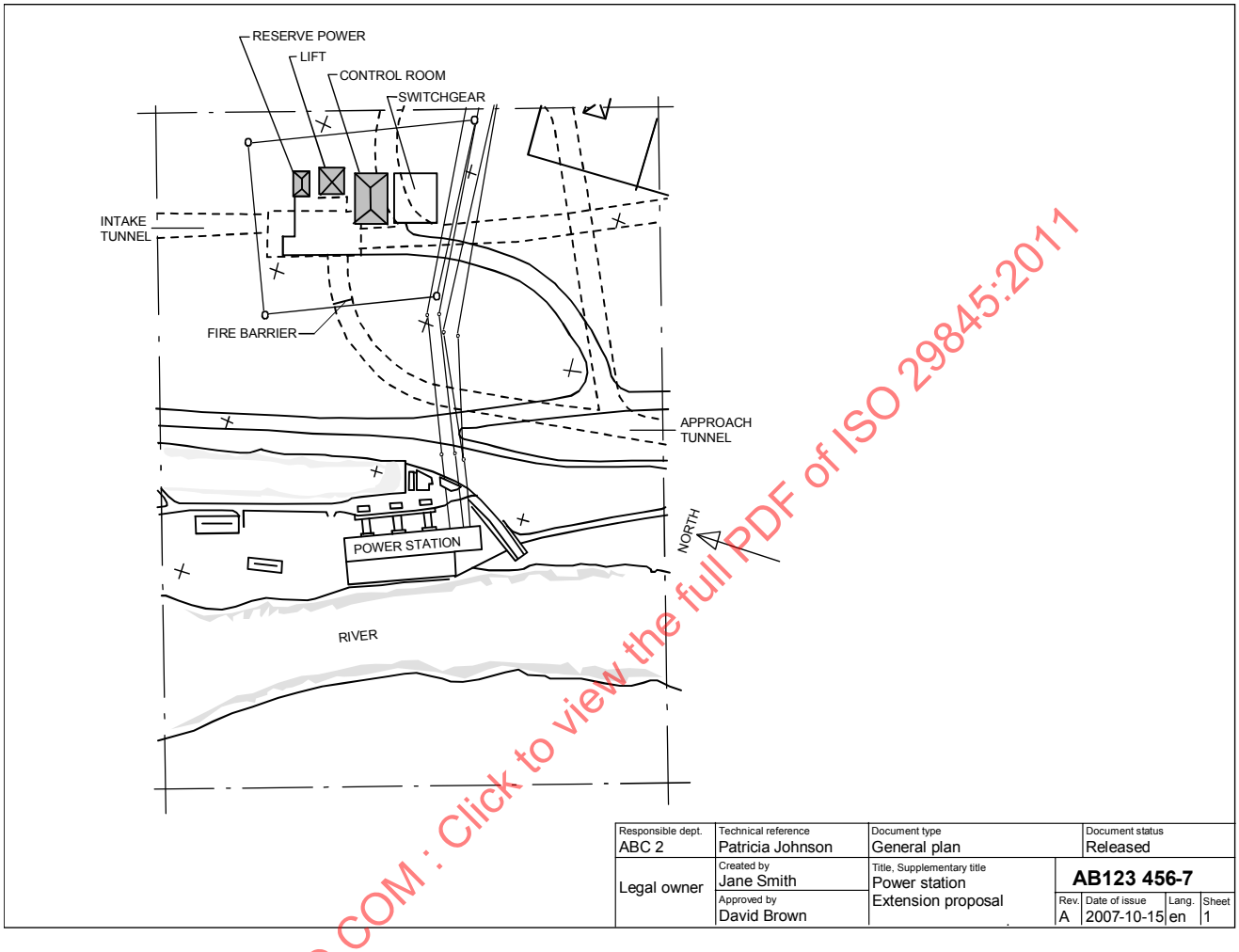

Figure 12 — Block plan

This type of drawing is construction specific.

STANDARDSISO.COM : Click to view the full PDF of ISO 29845:2011

4.2.13 Site plan

A site plan (see Figure 13) is a layout drawing giving the position of construction works in relation to the setting out points, the means of access and the general layout of a site.

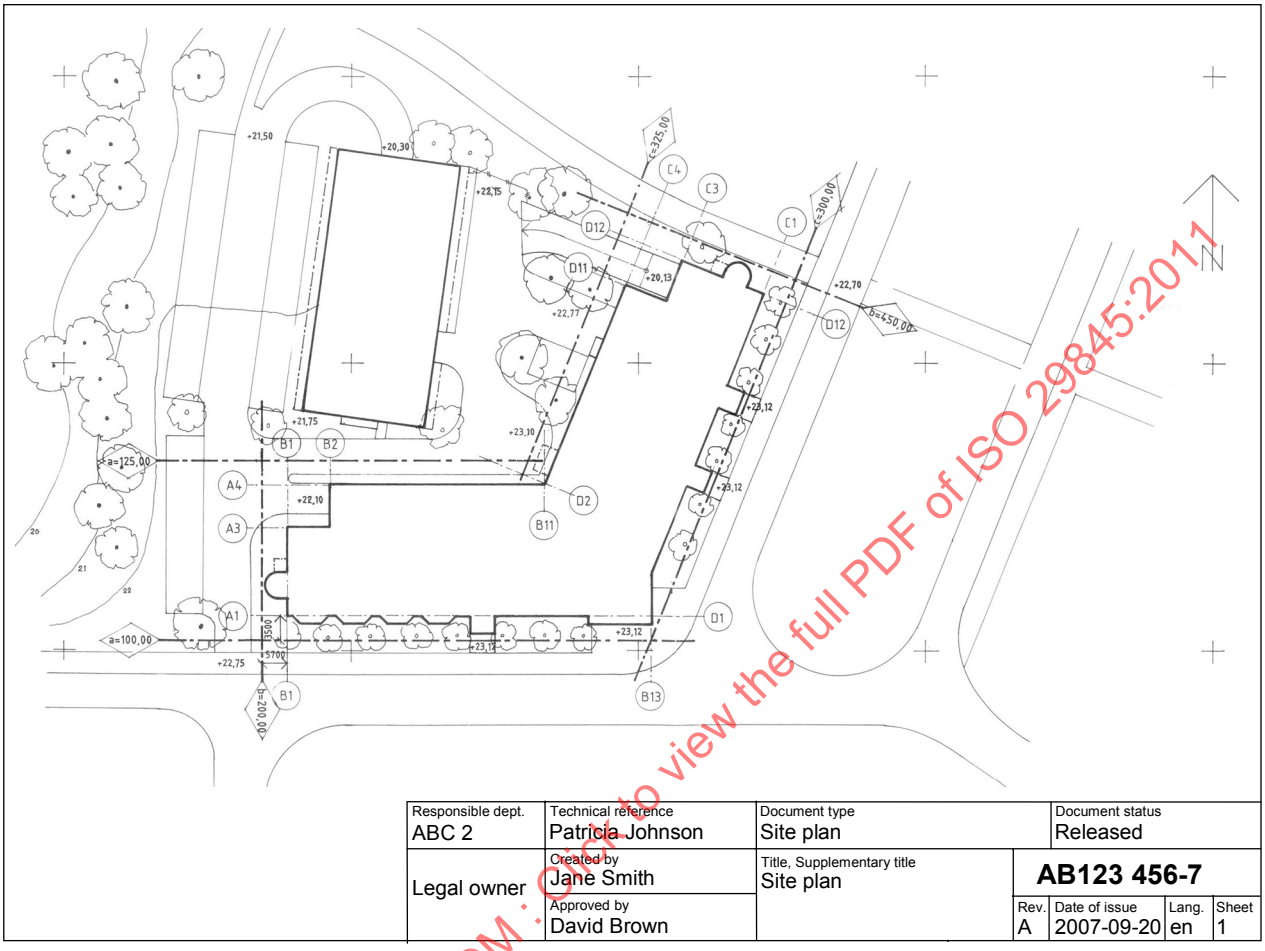

Responsible dept.	Technical reference	Document type	Document status
ABC 2	Patricia Johnson	Site plan	Released
Legal owner	Created by: Jane Smith Approved by: David Brown	Title, Supplementary title: Site plan	AB123 456-7

Rev.	Date of issue	Lang.	Sheet
A	2007-09-20	en	1

Figure 13 — Site plan

This type of drawing is construction specific. It is also known as a **setting-out drawing** or **levelling drawing**.

STANDARDSISO.COM : Click to view the full PDF of ISO 29845:2011

© ISO 2011 – All rights reserved

4.3 Model

4.3.1 General

Data needed for unambiguous identification of a model shall be in accordance with ISO 7200.

Common practice in construction, though, is to differentiate between

a) **graphical models** in 2D or 3D, and

b) **building information models** (BIM) which are object-oriented – consisting of objects, each having a number of properties (geometrical representations can be among them) and relations to other objects.

Models are generally understood to be “data repositories” that can be filtered in order to produce a presentation for a defined purpose. Examples of presentations include different kinds of drawings or visualization in perspective, as well as text documents or tabular documents.

4.3.2 Part model

A part model (see Figure 14) is a model in which the product described is one single item.

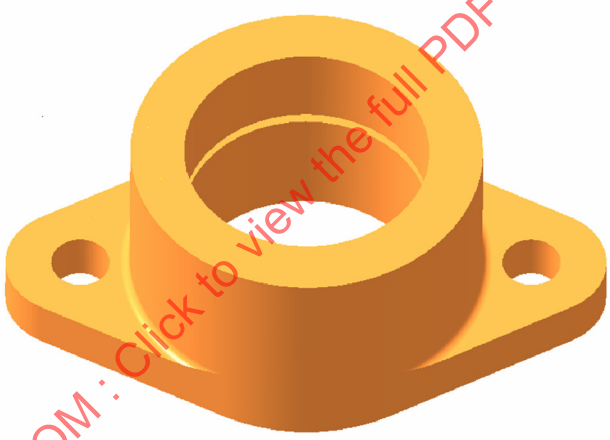

Figure 14 —— Part model

STANDARDSISO.COM : Click to view the full PDF of ISO 29845:2011

© ISO 2011 – All rights reserved

4.3.3 Assembly model

An assembly model (see Figure 15) is a model in which the product described is an assembly of two or more items.

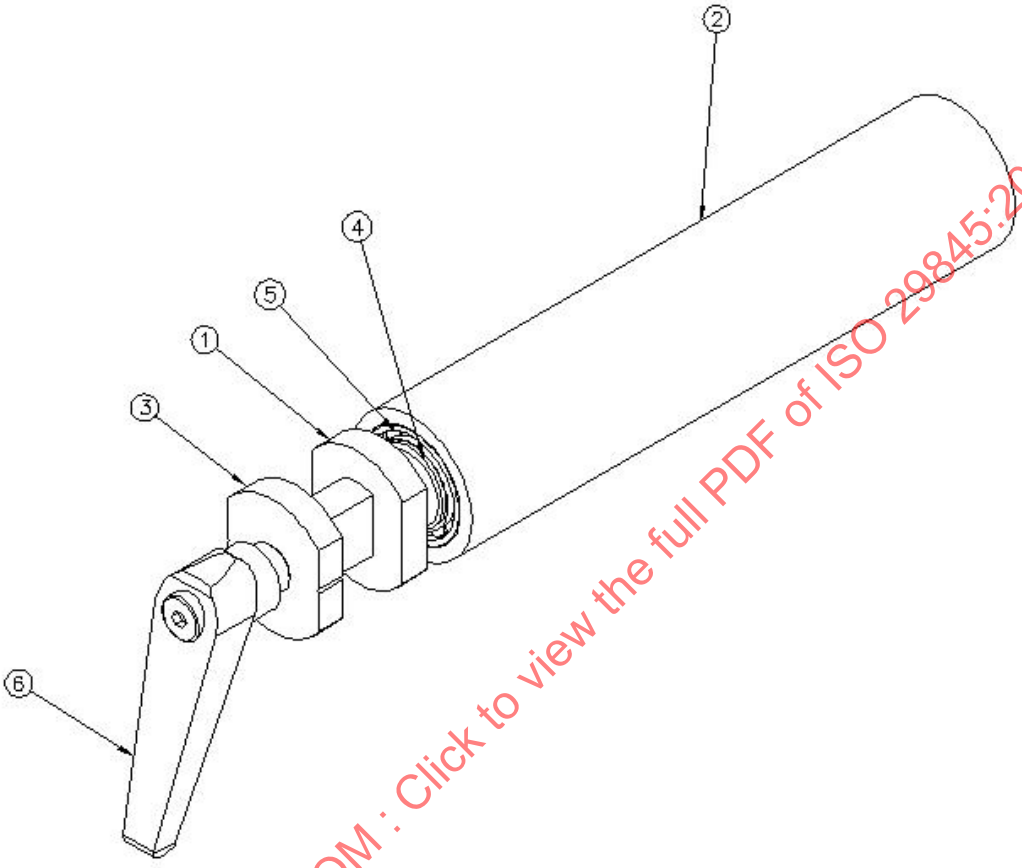

Figure 15 — Assembly model

STANDARDSISO.COM : Click to view the full PDF of ISO 29845:2011

© ISO 2011 – All rights reserved

4.3.4 Installation model

An installation model (see Figure 16) is a model in which the product described is an installation, showing parts or assemblies and a partial or complete representation of the installation site.

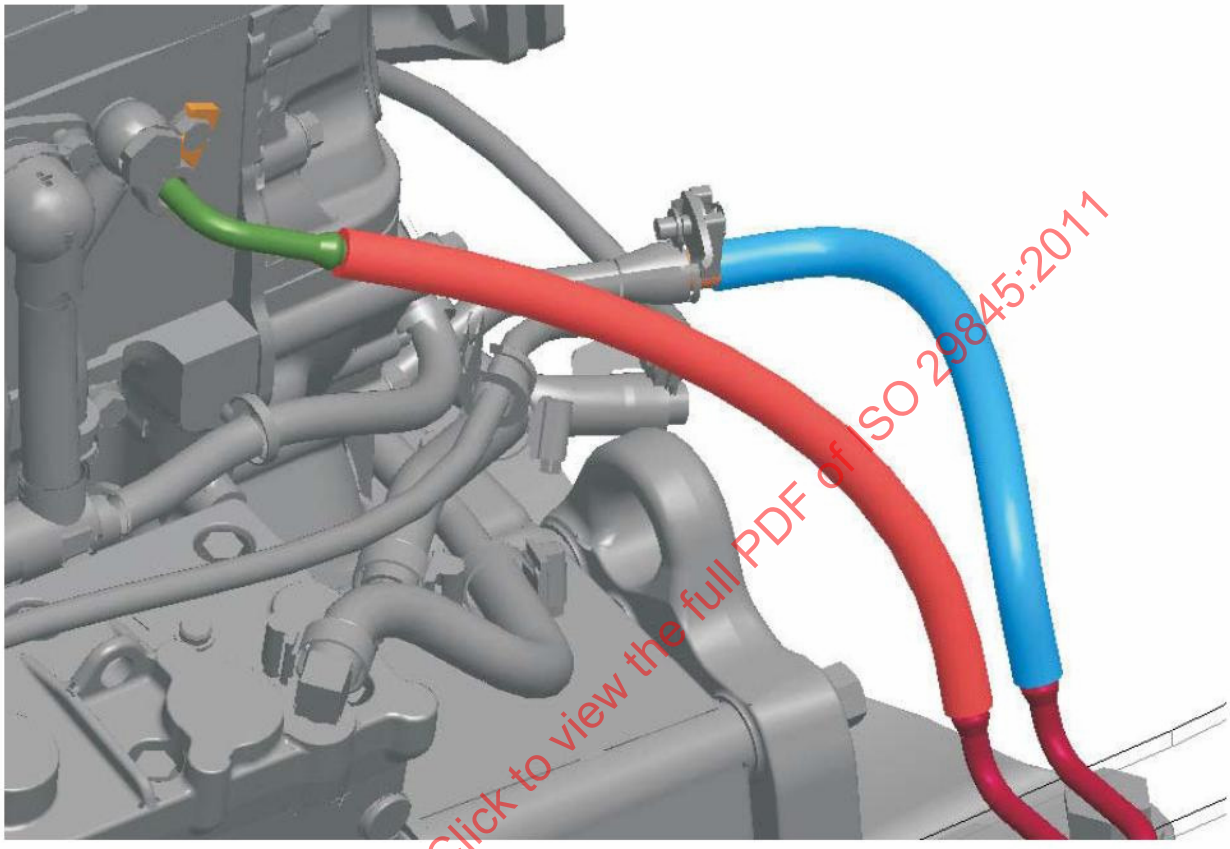

Figure 16 — Installation model

STANDARDSISO.COM : Click to view the full PDF of ISO 29845:2011

© ISO 2011 – All rights reserved

4.3.5 Interference model

An interference model (see Figure 17) shows the overall geometry of an object without giving unnecessary detailed information for the intended purpose, for example, conceptual proposals, space and collision analysis, digital mock-ups and centre of gravity calculations.

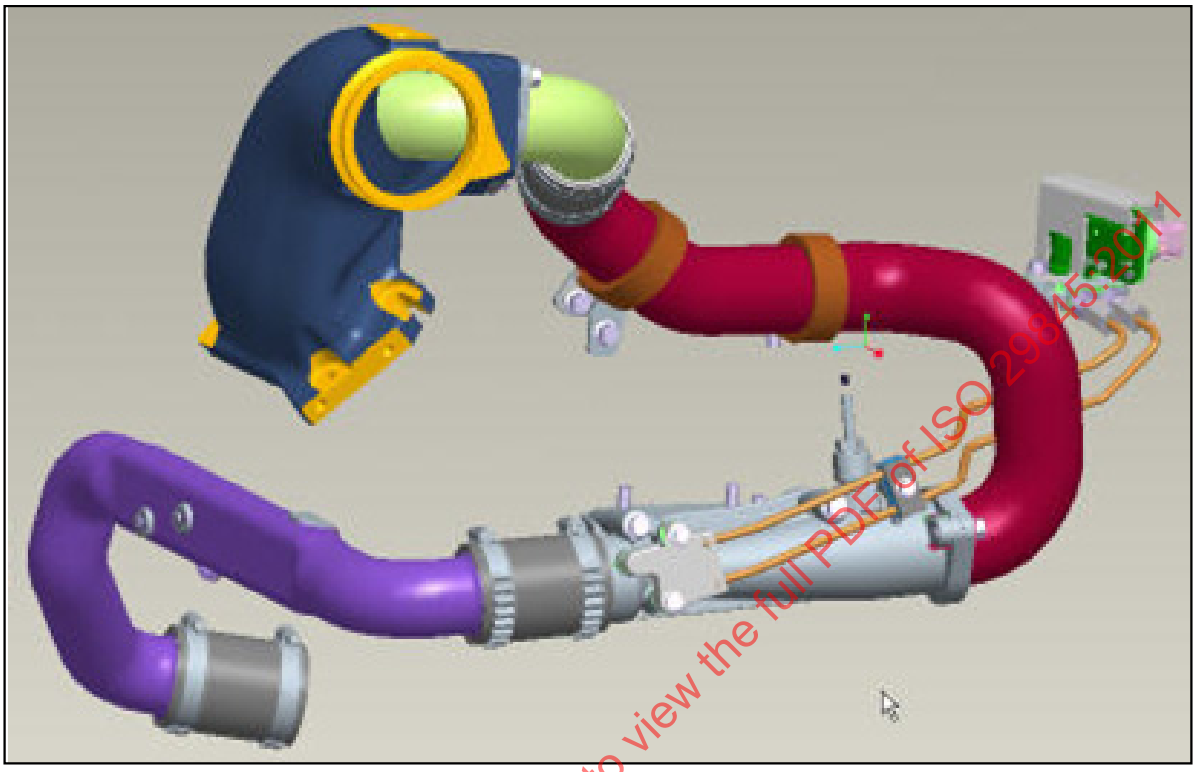

Figure 17 — Interference model

STANDARDSISO.COM : Click to view the full PDF of ISO 29845:2011

© ISO 2011 – All rights reserved

4.3.6 Space envelope model

A space envelope model (see Figure 18) is used in communication between one responsible unit or company and another.

The model shows the maximum space which can be occupied for an intended design solution and the geometrically significant interfaces of components and assemblies which are not yet designed in detail.

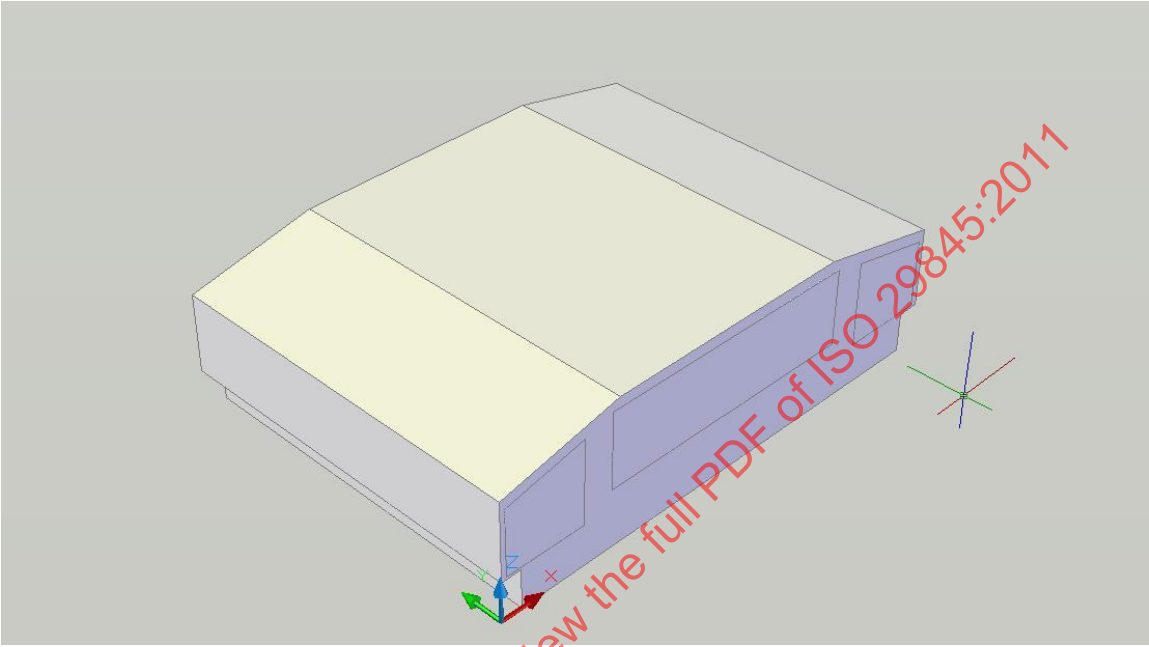

Figure 18 — Space envelope model

STANDARDSISO.COM : Click to view the full PDF of ISO 29845:2011

© ISO 2011 – All rights reserved

4.3.7 Annotated design model

An annotated design model (see Figure 19) is a combination of a design model, annotation and attributes that describes a product.

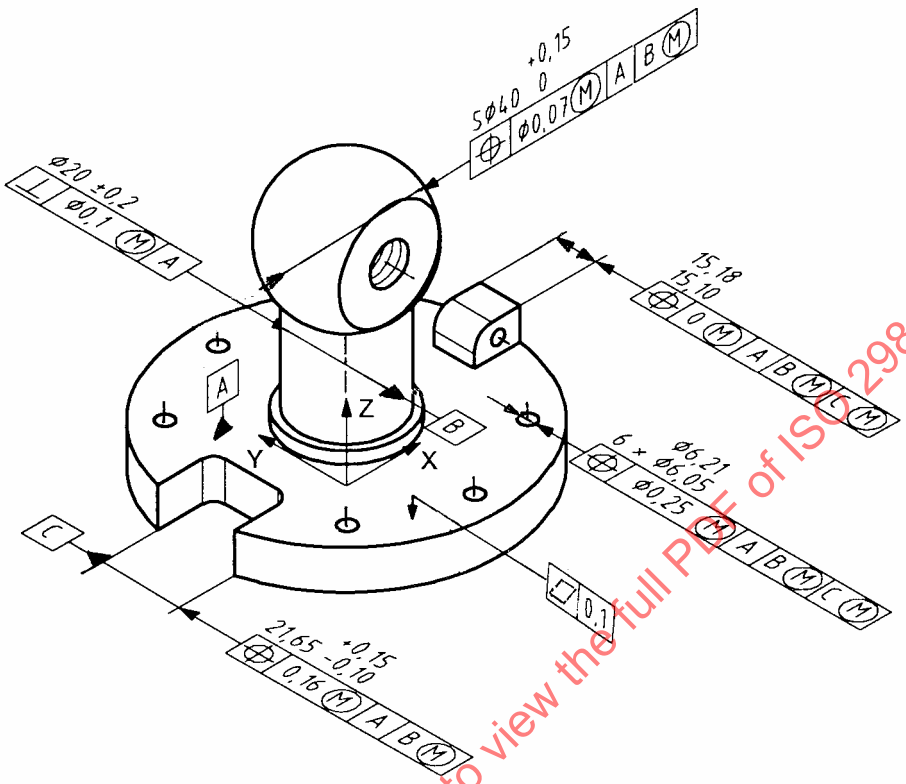

Figure 19 — Annotated design model

STANDARDSISO.COM : Click to view the full PDF of ISO 29845:2011

© ISO 2011 – All rights reserved

4.4 Diagram

4.4.1 General

A diagram is a technical document showing the functions of the objects composing a system and their interrelations using graphical symbols.

4.4.2 Overview diagram

An overview diagram (see Figure 20) provides a comprehensive view of an object with low degree of detailing.

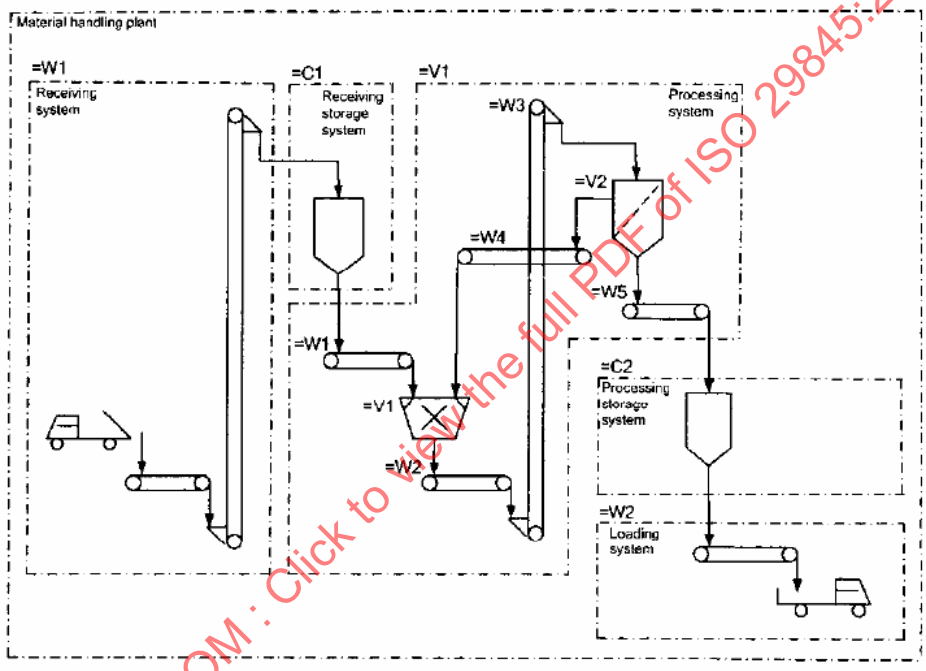

Responsible dept.	Technical reference	Document type	Document status
ABC 2	Patricia Johnson	Overview diagram	Released
Legal owner	Created by: Jane Smith	Title, Supplementary title: Material handling plant	AB123 456-7
	Approved by: David Brown	Rev. A; Date of issue 2008-02-19; Lang. en; Sheet 1	

STANDARDSISO.COM : Click to view the full PDF of ISO 29845:2011

Figure 20 — Overview diagram

An example of an overview diagram from the construction field is a **single-line diagram**. This shows the composition of a service installation in a simplified way.

© ISO 2011 – All rights reserved

4.4.2.1 Network map

A network map (see Figure 21) is an overview diagram showing a network on a map, for example, networks for district heating, district cooling, natural gas including generating stations and substations.

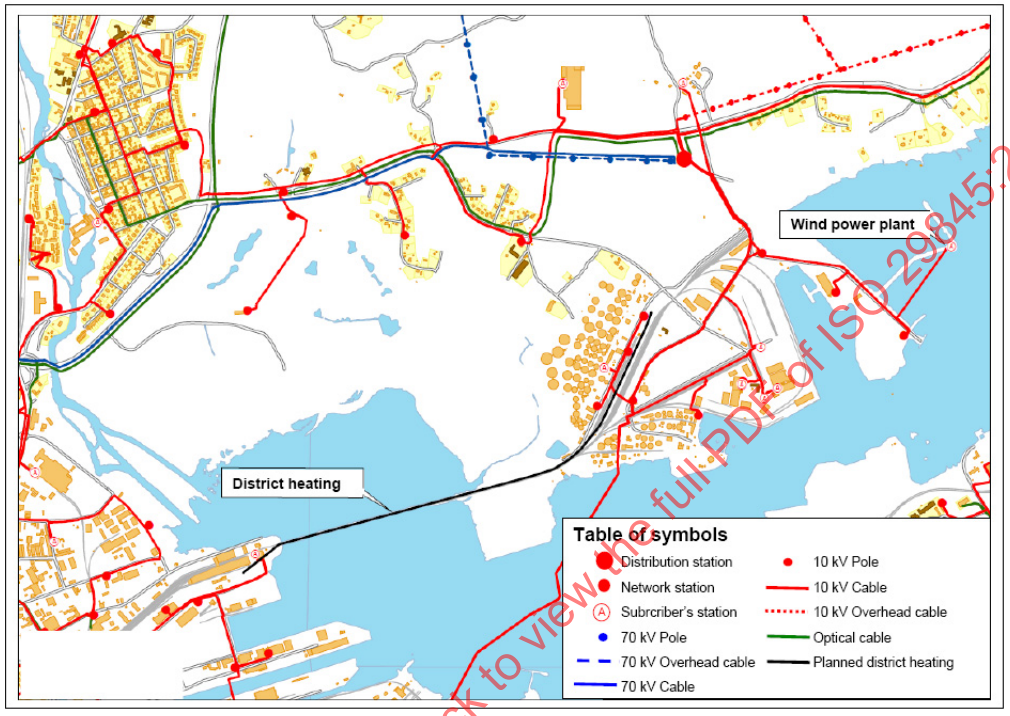

Responsible dept.	Technical reference	Document type	Document status
ABC 2	Patricia Johnson	Network map	Released
Legal owner	Created by: Jane Smith	Title, Supplementary title: Energy plant	AB123 456-7
	Approved by: David Brown		Rev. A; Date of issue 2007-10-12; Lang. en; Sheet 1

Figure 21 — Network map

STANDARDSISO.COM : Click to view the full PDF of ISO 29845:2011

© ISO 2011 – All rights reserved

4.4.2.2 Block diagram

A block diagram (see Figure 22) is an overview diagram providing a comprehensive view of an object predominantly using block symbols, for example, using rectangular symbols.

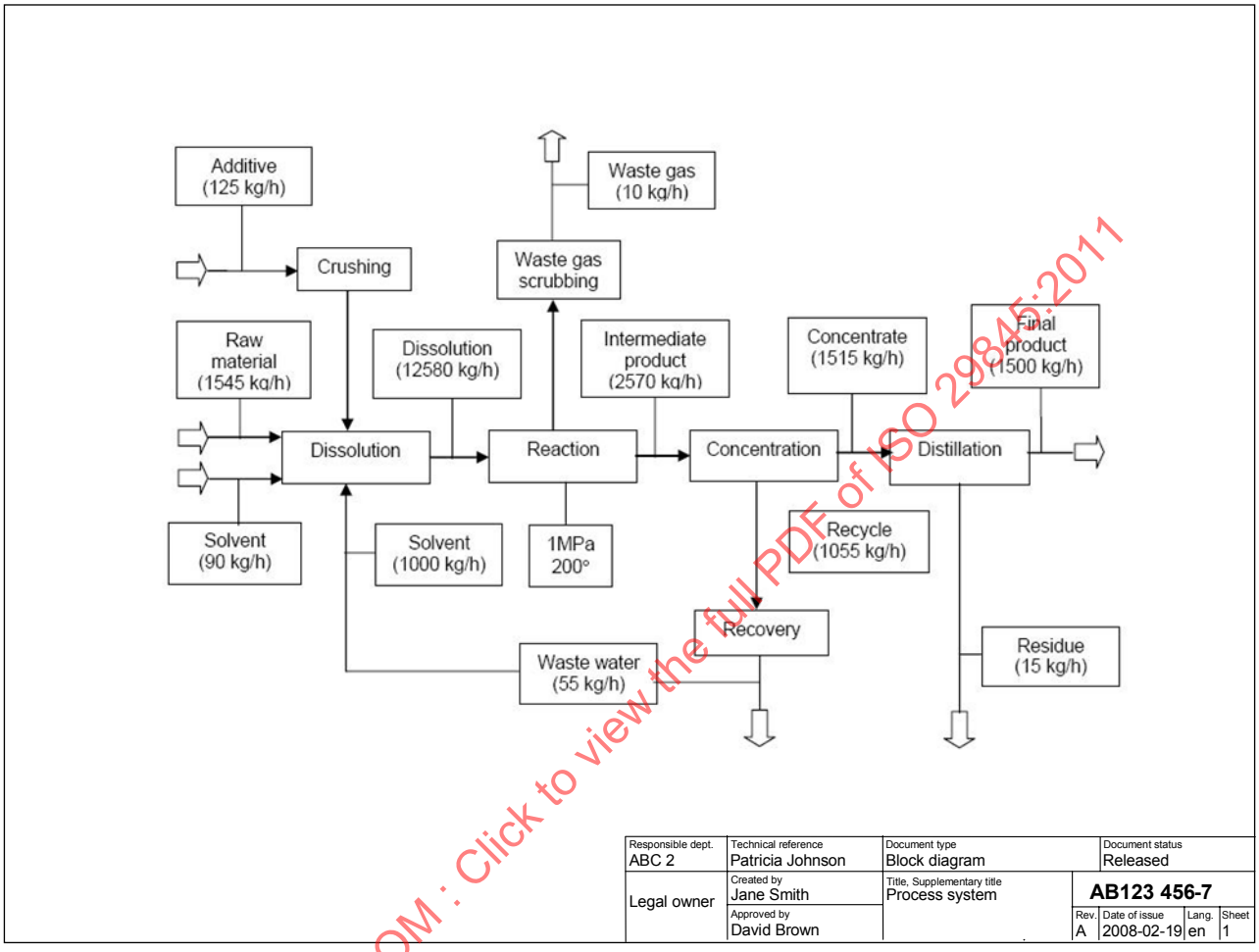

Figure 22 — Block diagram

An example of a block diagram from the construction field is a **room-relation drawing**. This shows the disposition of rooms and their relations to others.

STANDARDSISO.COM : Click to view the full PDF of ISO 29845:2011

4.4.2.3 Network diagram

A network diagram (see Figure 23) is an overview diagram which shows the connections between different kinds of installations for transmitting of electricity, fluids (e.g. water, gas) or heating/cooling, sewage system, telecommunications, equipment, etc.

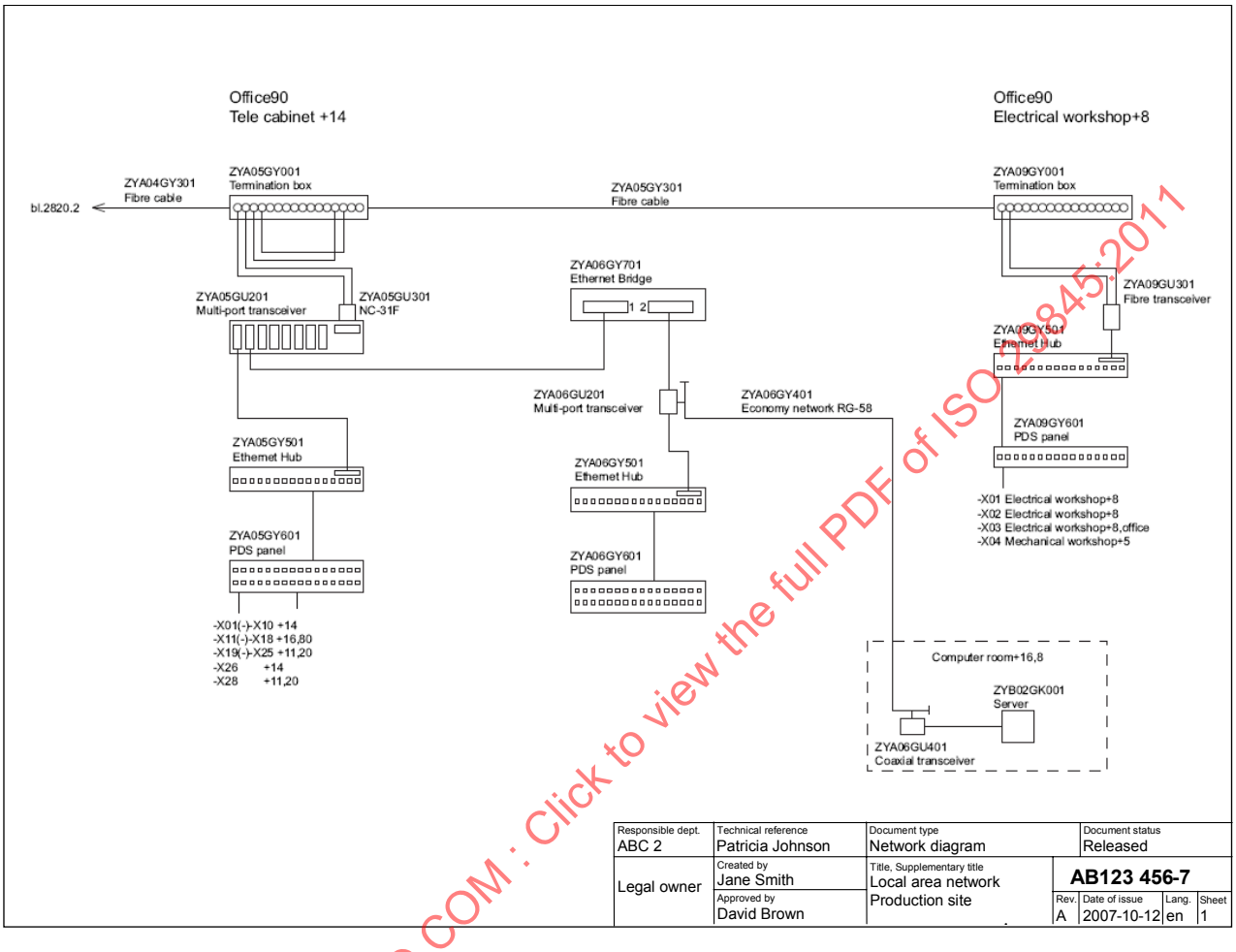

Figure 23 — Network diagram

An example of a network diagram from the construction field is a **flow diagram**.

STANDARDSISO.COM : Click to view the full PDF of ISO 29845:2011

© ISO 2011 – All rights reserved

4.4.3 Circuit diagram

A circuit diagram (see Figure 24) is a diagram providing information about the circuitry of an object(s).

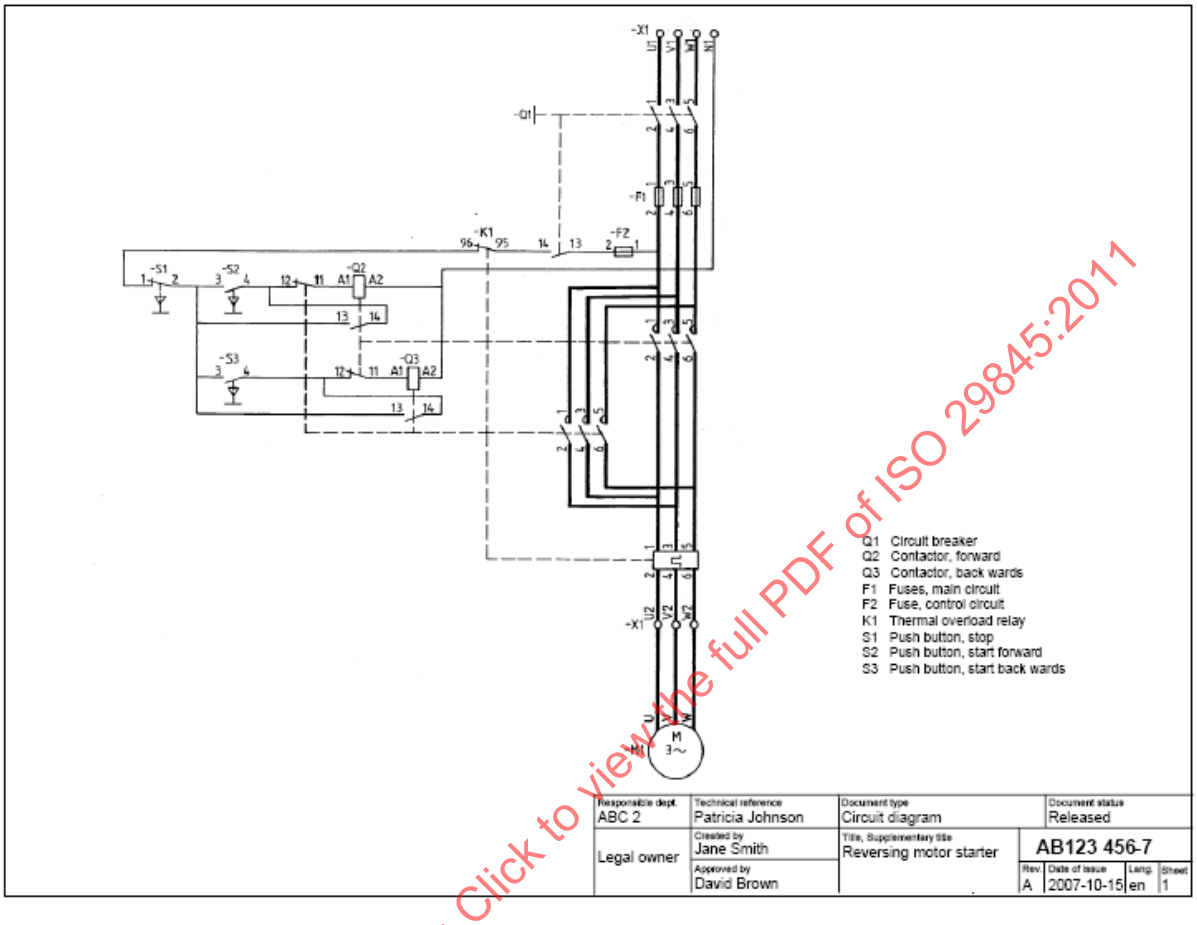

Figure 24 — Circuit diagram

STANDARDSISO.COM : Click to view the full PDF of ISO 29845:2011

© ISO 2011 – All rights reserved

4.4.4 Function diagram

A function diagram (see Figure 25) provides information about the functional behaviour of a system or an object. The diagram shall present the systems or objects and their interconnections independent of physical implementation. Information on function diagrams is provided in ISO 15519-1.

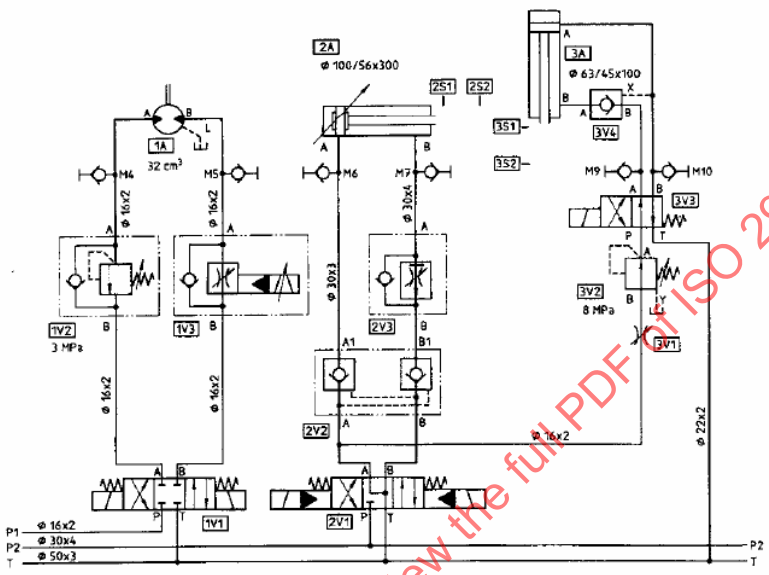

Responsible dept.	Technical reference	Document type	Document status
ABC 2	Patricia Johnson	Function diagram	Released
Legal owner	Created by: Jane Smith	Title, Supplementary title: Fluid power system	AB123 456-7
	Approved by: David Brown		Rev. A; Date of issue 2008-02-19; Lang. en; Sheet 1

Figure 25 — Function diagram

STANDARDSISO.COM : Click to view the full PDF of ISO 29845:2011

© ISO 2011 – All rights reserved

4.4.4.1 Process flow diagram

A process flow diagram (see Figure 26) illustrates the configuration of a process system or process plant by means of graphical symbols.

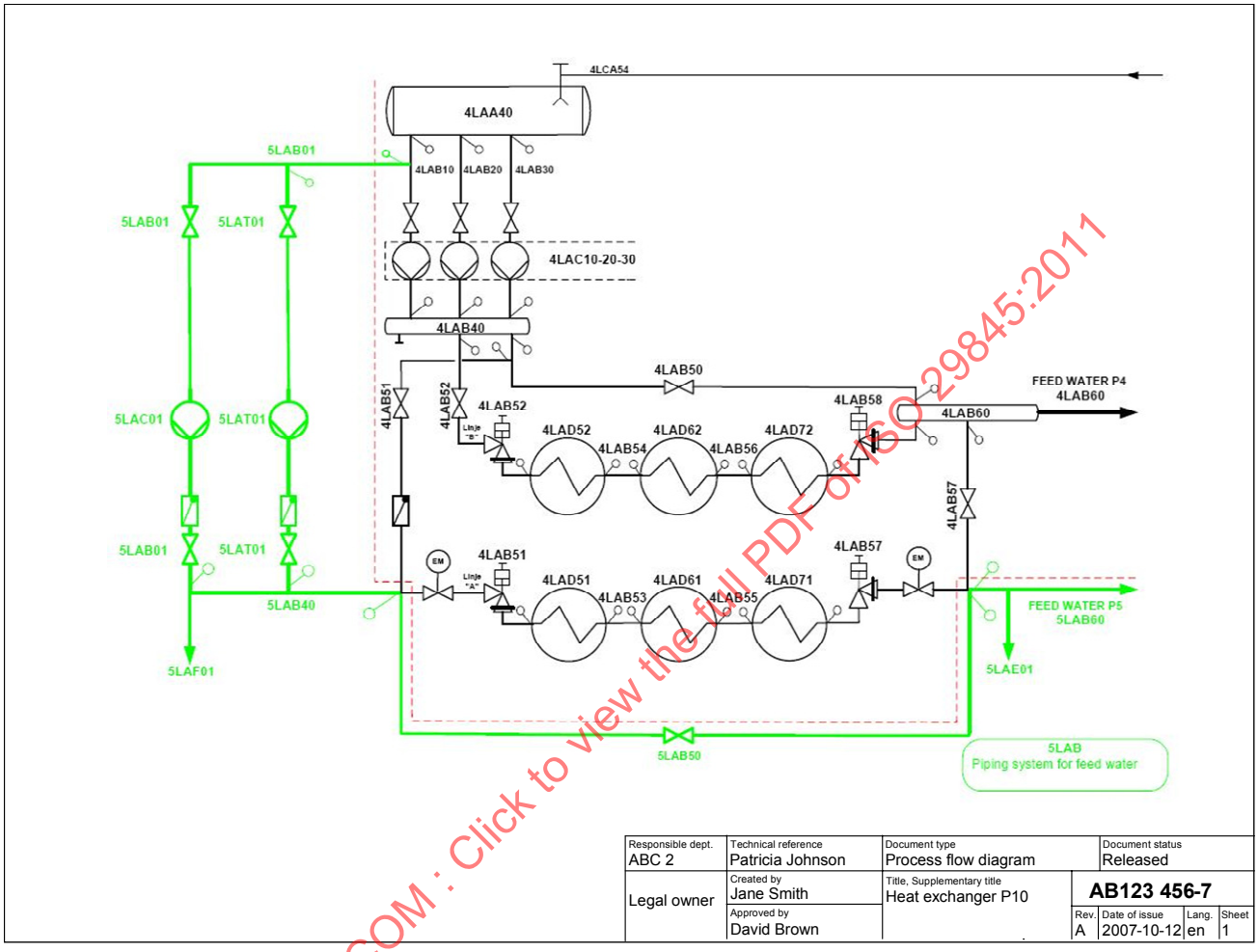

Figure 26 — Process flow diagram

STANDARDSISO.COM : Click to view the full PDF of ISO 29845:2011

4.4.4.2 P&I diagram (piping and instrumentation diagram)

A P&I diagram (see Figure 27) illustrates the configuration of a process system or process plant representing the technical realization by means of graphical symbols for equipment, connections and process measurement and control functions.

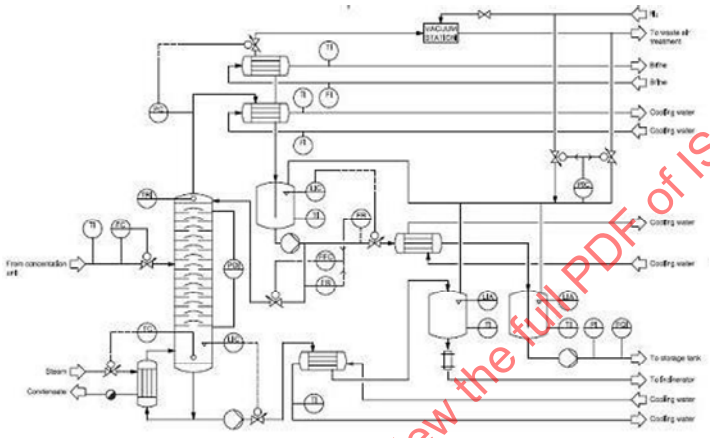

Responsible dept.	Technical reference	Document type	Document status
ABC 2	Patricia Johnson	P&I diagram	Released
Legal owner	Created by: Jane Smith	Title, Supplementary title: Power station Heat extension	AB123 456-7
	Approved by: David Brown		Rev. A; Date of issue 2007-10-12; Lang. en; Sheet 1

Figure 27 — P&I diagram

STANDARDSISO.COM : Click to view the full PDF of ISO 29845:2011

© ISO 2011 – All rights reserved

4.5 Chart

4.5.1 General

A chart is a document in the form of a table, graph, or diagram, e.g. an angular chart, a function chart, a sequence chart, a structure diagram and a nomogram.

4.5.2 Angular chart

An angular chart (see Figure 28) shows the relation between the angular position of an object and the function, e.g. a cam shaft and a cam shaft pulley.

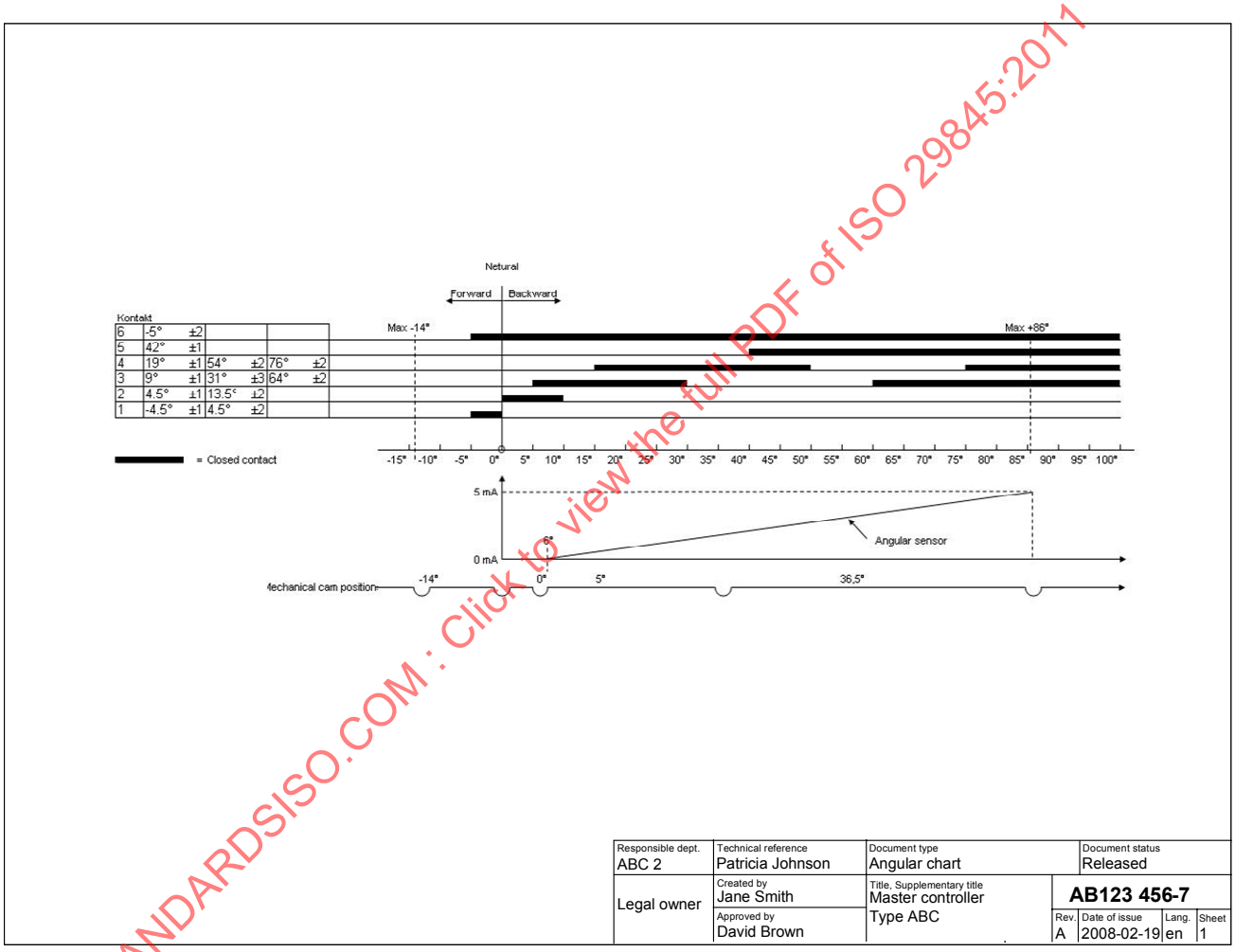

Figure 28 — Angular chart

Charts are mostly used for other purposes than construction. No specific examples are suggested.

STANDARDSISO.COM : Click to view the full PDF of ISO 29845:2011

4.5.3 Structure diagram

A structure diagram (see Figure 29) is a chart which shows the relation between different objects in a system or a product from different points of view, e.g. presenting functional objects, objects used to build a system or a product and documents relevant for a system or a product.

The structure is presented graphically as a hierarchical tree, which shows the constituent's identification numbers and descriptions. The presentation may vary from case to case depending on the purpose of the diagram.

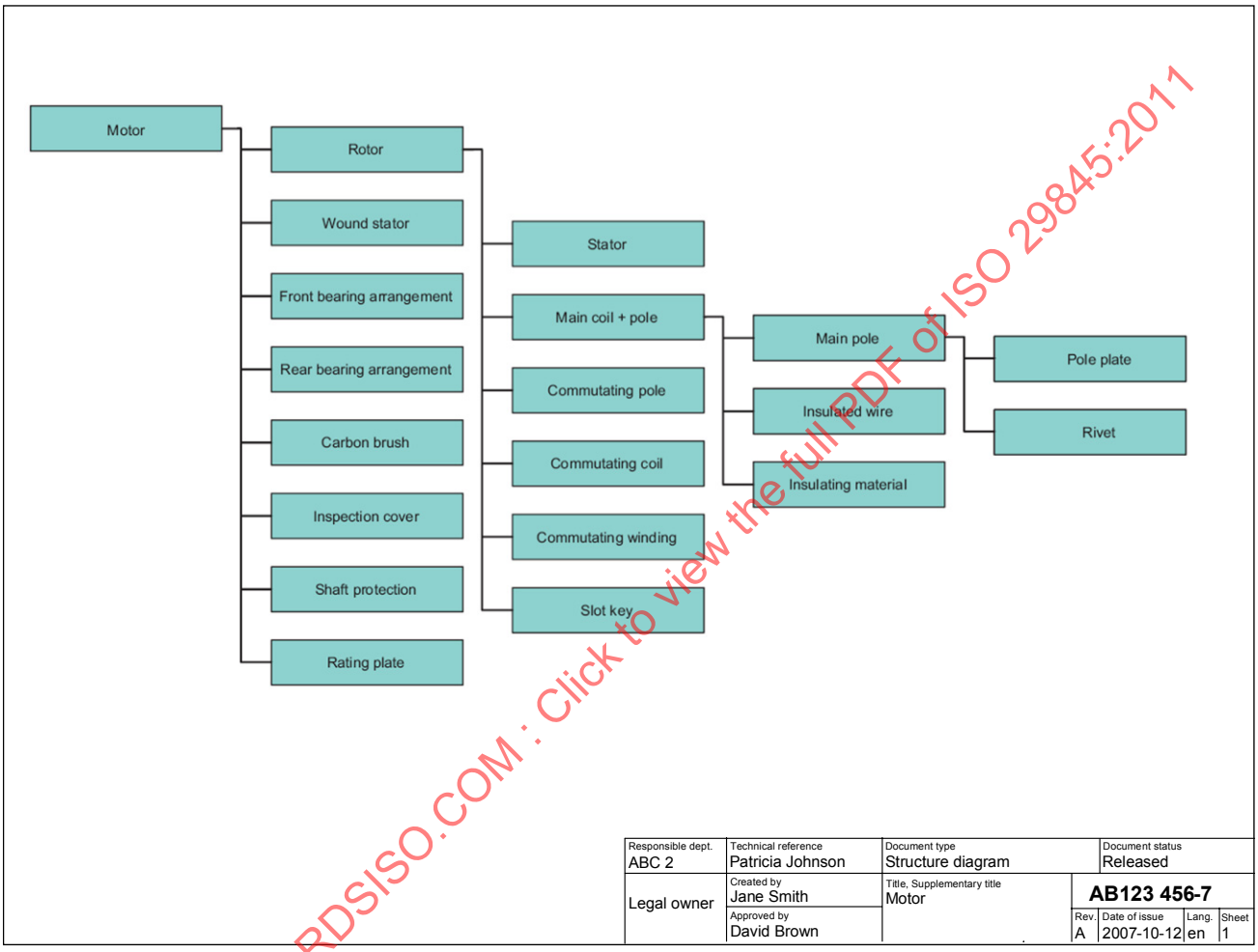

Figure 29 — Structure diagram

STANDARDSISO.COM : Click to view the full PDF of ISO 29845:2011

© ISO 2011 – All rights reserved

4.6 Graph

A graph (see Figure 30) is a diagram showing the relation between variable quantities, typically of two variables, each measured along a pair of lines at right angles presented, e.g. in Figures 30 a) and 30 b).

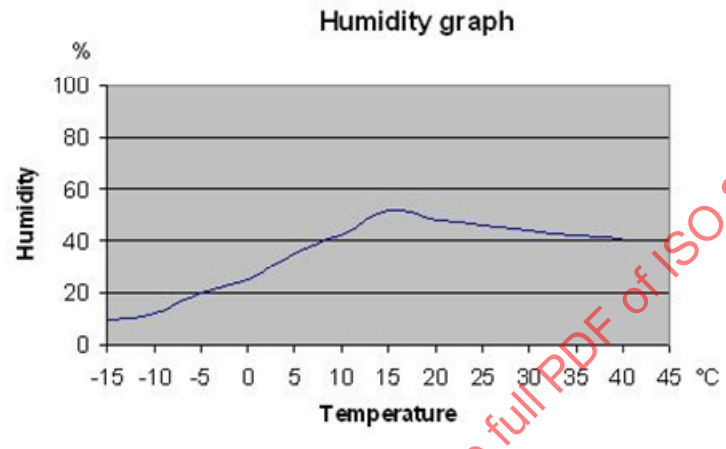

Responsible dept.	Technical reference	Document type	Document status
ABC 2	Patricia Johnson	Graph	Released
Legal owner	Created by: Jane Smith Approved by: David Brown	Title, Supplementary title: Humidity graph	AB123 456-7 Rev. A, Date of issue 2008-02-19, Lang. en, Sheet 1

a) Graph (line)

Figure 30 — Graphs (*continued on the next page*)

STANDARDSISO.COM : Click to view the full PDF of ISO 29845:2011

© ISO 2011 – All rights reserved

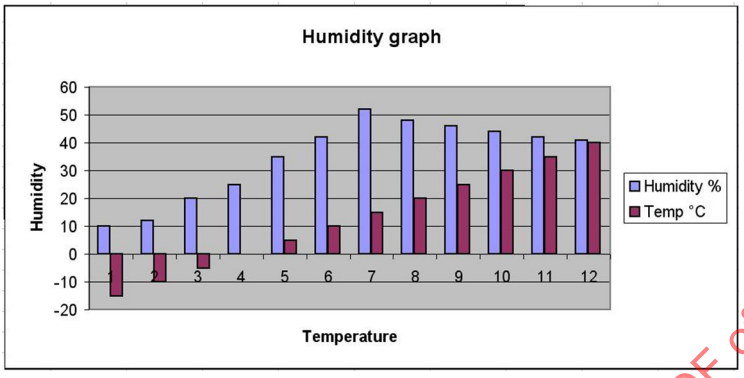

Responsible dept. ABC 2	Technical reference Patricia Johnson	Document type Graph	Document status Released
Legal owner	Created by Jane Smith	Title, Supplementary title Humidity graph	AB123 456-7
	Approved by David Brown		Rev. A / Date of issue 2008-02-19 / Lang. en / Sheet 1

b) Graph (column)

Figure 30 — Graphs

Graphs are mostly used for other purposes than construction. No specific examples are suggested.

STANDARDSISO.COM : Click to view the full PDF of ISO 29845:2011

© ISO 2011 – All rights reserved

4.7 List

4.7.1 Parts list

Parts lists (see Figure 31) specify all constituents of an assembled part by part reference number, quantity, part number, technical data, etc. The association between the part on a parts list and its graphical representation on the drawing is given by an identification reference. This reference can be given by a part reference or the constituent part number. For details of parts list, see ISO 7573.

A parts list shows only the constituent parts of the next lower structural level in the decomposition of the assembly.

An example of term that may occur for this document type is a spare parts list.

Technical data

Weight	8,2 kg
Primary voltage	21-30 V DC
Secondary voltage	24 V DC, +/- 0,3 V
Output power	300 W
Ambient temperature	65 Cel, max

Document references

Assembly model	AB123 002-13
Assembly drawing	AB123 002-14
Circuit diagram	AB123 002-15
Test specification	AB123 002-16
Maintenance instruction	AB123 002-17

Part ref.	Qty	Unit	Reference designation	Part number	Part name	Technical data, designation	Remark
1	1			AB123 001-55	Apparatus plate		
2	1			AB123 001-56	Front plate		
3	1			AB123 001-57	Side plate		
4	1			AB123 001-58	Side plate		
5	1			AB123 005-1	Cooler		
6	1		D1	AB123 007-3	Circuit breaker	3-pole, 10A	
7	1		V1	AB123 007-8	Rectifier		
8	1		C1	AB123 007-9	Capacitor	47uF, 40V	
9	1			AB123 009-45	Insulating nut	Polyamide M12	Tightening torque: 6 Nm
10	1		T1	AB123 007-2	Transformer	Manufacturer NN, type ABC	
11	6			AB123 009-68	Torx pan head screw	ISO 14583 - M5x16 - 8.8 - A2F	
12	2			AB123 009-52	Hexagon head screw	ISO 4017 - M8x25 - 8.8 - A2F	
13	2			AB123 009-27	Hexagon nut	ISO 4032 - M8 - 8 - AF	
14	2			AB123 009-89	Washer	ISO 7089 - 8 - 200HV - A2F	
15	1			AB123 009-95	Label		Marked: AB123 456-7

Responsible dept.	Technical reference	Document type	Document status
ABC 2	Patricia Johnson	Parts list	Released
Legal owner	Created by: Jane Smith Approved by: David Brown	Title, Supplementary title: Supply unit	AB123 456-7

Rev.	Date of issue	Lang.	Sheet
A	2008-02-28	en	1

Figure 31 — Parts list

STANDARDSISO.COM : Click to view the full PDF of ISO 29845:2011

4.7.2 Document list

A document list (see Figure 32) is a formally built-up inventory in which all documents, or subsets of documents, that belong to a system, part, project, assignment, etc. are listed. The list should include the identification number, revision index, document type, etc. of the documents.

Responsible dept.	Technical reference	Document type	Document status
ABC 2	Patricia Johnson	Document list	Released

Legal owner	Created by	Title, Supplementary title	AB123 456-7			
	Jane Smith	Connection unit				
	Approved by		Rev.	Date of issue	Lang.	Sheet
	David Brown		A	2007-10-12	en	1

Title	Document number	Revision index	Document type
Connection unit	AB 123456-7	2	Parts list
Connection unit	AB 234567-8	2	Assembly drawing
Wiring harness	AB 345678-9	3	Wiring table
Mounting plate	AB 456789-0	1	Part drawing
Terminal block	AB 567890-1	1	Supplier drawing
Sign	AB 678901-2	3	Part drawing
.....	.....	...	.....
.....	.....	...	.....
.....	.....	...	.....
.....	.....	...	.....
.....	.....	...	.....
.....	.....	...	.....
.....	.....	...	.....
.....	.....	...	.....
.....	.....	...	.....

STANDARDSISO.COM : Click to view the full PDF of ISO 29845:2011

Figure 32 — Document list

The construction industry also uses **document lists**. Drawing lists are common; these only list drawings of a construction project. The general document list then references the drawing list.

© ISO 2011 – All rights reserved

4.7.3 Bill-of-material (BOM)

A BOM (see Figure 33) is a presentation of the constituents in a product structure with the possibility to adopt the level of decomposition to actual need.

A BOM can be adapted for different purposes, e.g. an engineering BOM (E-BOM) and a production BOM (P-BOM).

EXAMPLE List of the raw materials, assemblies, components, parts, consumable items and the quantities of each needed to manufacture an end product.

NOTE A BOM is similar to a parts list with the exception that parts list defines one structural level only.

Responsible dept.	Technical reference	Document type	Document status
ABC 2	Patricia Johnson	Bill of material	Released

Legal owner	Created by	Title, Supplementary title	AB123 456-7			
	Jane Smith	Solvent Recovery Plant				
	Approved by	Pipe Work	Rev.	Date of issue	Lang	Sheet
	David Brown		A	2008-01-25	en	1

'Project ABC123456

'Solvent Recovery Plant

'Date: 1 Sep 2009 16:27

'Pipework Bill of material

CODE	Bore1	Bore2	Bore3	Detail	Material	Tube	Quantity
NAME				Text	Text	mm	
ATT15	15	15	0	unset		0.00	1
ST1599	100	100	0	HANGER FOR CS PIPE STD-000941 - DIA 114.3		0.00	1
ST1600	100	100	0	SLIDE GUIDE FOR CS PIPE, CL HEIG 157 DIA 114.3		0.00	2
KC200	200	200	0	CAP LONG ANSI B16.9 BW	ASTM A234-WPB	0.00	4
KC300	300	300	0	CAP LONG ANSI B16.9 BW	ASTM A234-WPB	0.00	2
EA100	100	100	0	ELBOW LR ANSI B16.9 BW	ASTM A234-WPB	0.00	13
EA150	150	150	0	ELBOW LR ANSI B16.9 BW	ASTM A234-WPB	0.00	25
EB25	25	25	0	ELBOW 90DEG ANSI B16.11 SW #3000	ASTM A105	0.00	11
EB50	50	50	0	ELBOW 90DEG ANSI B16.11 SW #3000	ASTM A105	0.00	23
EC50	50	50	0	ELBOW 45DEG ANSI B16.11 SW #3000	ASTM A105	0.00	2
FH100	100	100	0	FLANGE SO ANSI B16.5 #150.RF	ASTM A105	0.00	1
FH150	150	150	0	FLANGE SO ANSI B16.5 #150.RF	ASTM A105	0.00	5
FHD100	100	100	0	FLANGE SO ANSI B16.5 #300.RF	ASTM A105	0.00	2
FS50	50	50	0	FLANGE SW ANSI B16.5 #150.RF	ASTM A105	0.00	2
GC25	25	25	0	GASKET RF 1.5MM ANSI B16.5 #150	SS & ASB	0.00	4
GC250	250	250	0	GASKET RF 1.5MM ANSI B16.5 #150	SS & ASB	0.00	3
TA200	200	200	200	TEE ANSI B16.9 BW	ASTM A234-WPB	0.00	3
TA200X150	200	200	150	TEE ANSI B16.9 BW	ASTM A234-WPB	0.00	2
TA300	300	300	300	TEE ANSI B16.9 BW	ASTM A234-WPB	0.00	1
TA300X250	300	300	250	TEE ANSI B16.9 BW	ASTM A234-WPB	0.00	2
PA250	250	0	0	PIPE SCH40 ANSI B36.10	API 5L-B	16076.70	9
PA300	300	0	0	PIPE SCH40 ANSI B36.10	API 5L-B	22522.00	11
PA50	50	0	0	PIPE SCH80 ANSI B36.10	ASTM A106-B	80561.98	55
PA80	80	0	0	PIPE SCH40 ANSI B36.10	API 5L-B	7104.13	3
AD100	100	100	0	CTRL VALVE FISHER TYPE 657-ED #300.RF	ASTM A216-WCB	0.00	2
VJ100	100	100	0	VALVE SWING CH ANSI B16.10 #150.RF	ASTM A216-WCB	0.00	2
VJ150	150	150	0	VALVE SWING CH ANSI B16.10 #150.RF	ASTM A216-WCB	0.00	2
150WELFFWS	150	150	0	SITE WELD	WELD	0.00	1

Figure 33 — Engineering bill-of-material

An example of a BOM from the construction field is a **bill of quantities** which specifies both materials and quantities of works.

STANDARDSISO.COM : Click to view the full PDF of ISO 29845:2011

4.7.4 Signal list

A signal list (see Figure 34) provides information about signals defined as input or output of functional units.

Document type: Signal list

Title: CDU - DC system

Bus name CDU Date & Time (Tragraph	Byte Off	Type Type	Task Task	Tragraph From CDU	Tragraph To DCU/M, DCU/A	Description	Scaling VCU	Scaling DCU	Comment
VCU-TIME			**T4**						
CTYEAR	0	A	T4	CTYEAR	ZMVBYEAR	Year	1=1	1=1	
CTMONTH	2	A	T4	CTMONTH	ZMVBMNTH	Month	1=1	1=1	
CTDAY	4	A	T4	CTDAY	ZMVBDAY	Day	1=1	1=1	
CTHOUR	6	A	T4	CTHOUR	ZMVBHOUR	Hour	1=1	1=1	
CTMINUTE	8	A	T4	CTMINUTE	ZMVBMIN	Minute	1=1	1=1	
CTSECOND	10	A	T4	CTSECOND	Not used	Second	1=1	1=1	
CTCID	12	A	T4	CTCID	ZMVBCID	Car identity	1=1	1=1	
CT1CP		**Type**	**Task**	**VCU**	**DCU/M**				
CDU-DCUM1.0*16			**T2**						
CT1CP210	0	A	T2	TLYWDGT2		Free running watchdog counter from VCU	1=1	1=1	
CT1CP211	2	A	T2	TLYPBFM1	ZMVBWTR1	Reference tractive/braking effort	100=1 kN	4096=100kN	Proj.dep.scale
CT1CP212	4	A	T2	TLYSPEED	ZMVBTRVE	Vehicle speed	100=1 km/h	4096=100km/h	
CT1CP213	6	A	T2			Spare			
CT1CP1C1	8	A	T2			Packed Bools			
CT1CP1C1, bit 1		L	T2	TLYPSHM1	ZMVBPRSD	Command: protective shutdown			
CT1CP1C1, bit 2		L	T2		ZMVBEB	Status: emergency braking			
CT1CP1C1, bit 3		L	T2	TLYSPDV	ZMVBTRVV	Valid bit: vehicle speed			
CT1CP1C1, bit 4		L	T2	TLYPBR1V	ZMVBRETV	Valid bit: tractive/braking reference			
CT1CP1C1, bit 5		L	T2	TLYS1CL1	ZMVBS1CL	Status: separation contactor closed via DX unit			
CT1CP1C1, bit 6		L	T2	TLYCCCL1	ZMVBCCCL	Status: charging contactor closed via DX unit			
CT1CP1C1, bit 7		L	T2		ZMVBCFV	Valid bit: DX unit for charging and separation contactor			
CT1CP1C1, bit 8		L	T2		ZMVBEXTR	Command: external transient recorder trig			Not used
CT1CP1C1, bit 9		L	T2		ZMVBCVIS	Command: converter isolation request			SWM0189
CT1CP1C1, bit 10		L	T2						
CT1CP1C1, bit 11		L	T2						
CT1CP1C1, bit 12		L	T2						
CT1CP1C1, bit 13		L	T2						
CT1CP1C1, bit 14		L	T2						
CT1CP1C1, bit 15		L	T2						
CT1CP1C1, bit 16		L	T2						

Responsible dept.	Technical reference	Document type	Document status
ABC 2	Patricia Johnson	Signal list	Released
Legal owner	Created by: Jane Smith	Title, Supplementary title: Brake system	AB123 456-7
	Approved by: David Brown		Rev. A; Date of issue 2007-10-12; Lang. en; Sheet 1

Figure 34 — Signal list

STANDARDSISO.COM : Click to view the full PDF of ISO 29845:2011

© ISO 2011 – All rights reserved

4.7.5 Coordinate data list

A coordinate data list (see Figure 35) provides information about certain positions on a part represented in a Cartesian coordinate system.

A coordinate list could for instance be used to define the ends and bends of a pipe or a thin metal sheet.

Point No.	X	Y	Z	Description comments
Y1	2370	768,4	1671	
Y2	1265	708,8	1502	
Y3	2480	820,6	1090	
Z4	2370	773	1674,8	
Z5	1265	713	1506	
X6	2520,1	841	1570	
Y7	1310	782,5	1312	
Y8	1563	774,3	1227,5	
Y9	2320	818,7	1080	

Responsible dept.	Technical reference	Document type	Document status
ABC 2	Patricia Johnson	Coordinate data list	Released

Legal owner	Created by	Title, Supplementary title	AB123 456-7			
	Jane Smith	Hole pattern				
	Approved by	Top plate	Rev.	Date of issue	Lang.	Sheet
	David Brown		A	2008-02-19	en	1

Figure 35 — Coordinate data list

STANDARDSISO.COM : Click to view the full PDF of ISO 29845:2011

4.7.6 Apparatus list

An apparatus list (see Figure 36) provides information about the constituent functional components included in a system.

Item No No/VEH	Function Identification text		Type	Functional data Nominal rating	Suppl. Manuf	M-Code M/VEH	Loc	Identification	CGE
, . VH	Block preheating								A
, .	Side wall								
1 2	Pantograph Single arm pantograph		ABC-85-CD	25KW- 627-2620 mm	ABC/CD5	146,0	DA	3EHP030005R0001	
2 2	Separating wire Wire		EFG-JKLM	120 mm2 - 400 mm	ABC/CD3				
3 1	Primary voltage transformer Voltage transformer		NOP 10/25/S	25kV AC-200V	ABC/DFG	72,0	DA	HBTB436971R0003	
4 1	Earthing switch for M.C.B. Earthing switch		EFG-Q 25.04	25kV-400A-2pole	ABC/CD5	29,0	DA	HBTB585485R0003	
5 1	Main circuit breaker Vacuum-circuit breaker		C25.10/110V	25kV-1000A-110V DC	ABC/FGH	150,0	DA	ALB0300405R0001	A
5A 1	Connector Connector		M.35P/GR40		ABC/G-H		5	HSBA231405R0106	A
6.1 1	Primary current transformer Current transformer		RST-U-VX 1	500/5A- 90 VA-KL.3	ABC/NER	6,6	DA	HBTB585560R0011	A
6.2 2	Primary current transformer Current transformer		YZ-AB 1000	1:5000-1000A-KL.3	ABC/EM	2,2	HB2	HBTB585560R0021	
7 1	Main transformer Transformer	Primary Traction 1500V supply Aux converter (HB1) Aux circuit (HB2)	EFG-CD 6220	6220kVA - 50Hz 25kV, 250A 6*1266V-592A 1560V-532A 812V-282A 227V172A	SIG/HHH	8500,0	UG	HSTN003124R0001	A
9 2	Surge arrestor Surge arrestor		EFG-MWA 30	30kV-10kA-100kA	ABC/AR	31,0	DA	HATW205558R0030	
10 4	Earth return brush Earth return brush	With cable TIB	T-EB1000 A	1000A-500V-Flat 70mm2-1800mm long	ABC/RAM		DG	HBTB585497R3091	
11 1	Earthing choke Choke		EFG-Choke	1524 disks 1000V-50Hz-1min	ABC/885	8,0	MR	HBT215000R0004	

Responsible dept.	Technical reference	Document type	Document status
ABC 2	Patricia Johnson	Apparatus list	Released
Legal owner	Created by: Jane Smith Approved by: David Brown	Title, Supplementary title: Vehicle Electrical equipment	AB123 456-7 Rev. A, Date of issue 2007-10-12, Lang. en, Sheet 1

Figure 36 — Apparatus list

Lists are frequently used for specific product categories, such as lighting appliances or furniture, but there are no internationally standardized terms for such kinds of lists.

STANDARDSISO.COM : Click to view the full PDF of ISO 29845:2011

© ISO 2011 – All rights reserved