INTERNATIONAL STANDARD

ISO 3055

Third edition
2021-11

Kitchen equipment — Coordinating sizes

Équipement de cuisine — Dimensions de coordination

STANDARDSISO.COM : Click to view the full PDF of ISO 3055:2021

Reference number
ISO 3055:2021(E)

© ISO 2021

STANDARDSISO.COM : Click to view the full PDF of ISO 3055:2021

COPYRIGHT PROTECTED DOCUMENT

© ISO 2021

All rights reserved. Unless otherwise specified, or required in the context of its implementation, no part of this publication may be reproduced or utilized otherwise in any form or by any means, electronic or mechanical, including photocopying, or posting on the internet or an intranet, without prior written permission. Permission can be requested from either ISO at the address below or ISO's member body in the country of the requester.

ISO copyright office
CP 401 • Ch. de Blandonnet 8
CH-1214 Vernier, Geneva
Phone: +41 22 749 01 11
Email: copyright@iso.org
Website: www.iso.org

Published in Switzerland

© ISO 2021 – All rights reserved

Contents

Page

Foreword ... **iv**
Introduction ... **v**
1 Scope ... **1**
2 Normative references ... **1**
3 Terms and definitions ... **1**
3.1 Worktop ... 1
3.2 Kitchen unit ... 2
3.3 Recess for appliances ... 3
3.4 Decorative panel ... 4
3.5 Appliance definitions ... 4
4 Coordinating sizes ... **5**
4.1 General ... 5
4.2 Height ... 8
4.2.1 Height of the worktop ... 8
4.2.2 Height of the recess for built-under appliances ... 8
4.2.3 Height of the opening of appliances ... 8
4.2.4 Vertical distance between worktop and wall hanging kitchen unit above it ... 9
4.2.5 Height of the feet/base ... 9
4.3 Depth ... 9
4.3.1 Depth of worktop ... 9
4.3.2 Worktop overhang ... 9
4.3.3 Depth of the working area when using protective wall panelling ... 9
4.3.4 Depth of the kitchen unit ... 9
4.3.5 Recess for kitchen units with built-under appliances ... 9
4.3.6 Total depth of wall hanging kitchen units above a worktop ... 9
4.4 Width ... 10

STANDARDSISO.COM : Click to view the full PDF of ISO 3055:2021

© ISO 2021 – All rights reserved

Foreword

ISO (the International Organization for Standardization) is a worldwide federation of national standards bodies (ISO member bodies). The work of preparing International Standards is normally carried out through ISO technical committees. Each member body interested in a subject for which a technical committee has been established has the right to be represented on that committee. International organizations, governmental and non-governmental, in liaison with ISO, also take part in the work. ISO collaborates closely with the International Electrotechnical Commission (IEC) on all matters of electrotechnical standardization.

The procedures used to develop this document and those intended for its further maintenance are described in the ISO/IEC Directives, Part 1. In particular, the different approval criteria needed for the different types of ISO documents should be noted. This document was drafted in accordance with the editorial rules of the ISO/IEC Directives, Part 2 (see www.iso.org/directives).

Attention is drawn to the possibility that some of the elements of this document may be the subject of patent rights. ISO shall not be held responsible for identifying any or all such patent rights. Details of any patent rights identified during the development of the document will be in the Introduction and/or on the ISO list of patent declarations received (see www.iso.org/patents).

Any trade name used in this document is information given for the convenience of users and does not constitute an endorsement.

For an explanation of the voluntary nature of standards, the meaning of ISO specific terms and expressions related to conformity assessment, as well as information about ISO's adherence to the World Trade Organization (WTO) principles in the Technical Barriers to Trade (TBT), see www.iso.org/iso/foreword.html.

This document was prepared by Technical Committee ISO/TC 136, *Furniture*.

This third edition cancels and replaces the second edition (ISO 3055:1985), which has been technically revised.

The main changes compared to the previous edition are as follows:

— Specification of the scope;

— Terms and definitions of kitchen furniture and appliances added;

— Normative refences revised;

— Requirements for the coordinating sizes (height, width and depth) of kitchen units and appliances given in more detail;

— Annexes A and B deleted.

Any feedback or questions on this document should be directed to the user's national standards body. A complete listing of these bodies can be found at www.iso.org/members.html.

STANDARDSISO.COM : Click to view the full PDF of ISO 3055:2021

© ISO 2021 – All rights reserved

Introduction

The purpose of standardization of kitchen equipment is to allow components to be combined in arrangements, which are harmonious and rational, due to account being taken of ergonomic and economic considerations.

To this end, the following aspects are considered:

— the sizes of component parts;

— the specific areas of each item of equipment, taking into account the possibility of their complete or partial overlapping;

— the location of pipes (water, gas, drainage, electricity);

— the combinations of components.

This document has been prepared according to the principles of modular coordination in building.

Attention is drawn to the fact that there can be national or regional regulations concerning supply of services (e.g. gas, electricity, water).

Attention is also drawn to the fact that there can be national or regional regulations/guidelines to cater for people with special needs.

STANDARDSISO.COM : Click to view the full PDF of ISO 3055:2021

© ISO 2021 – All rights reserved

STANDARDSISO.COM : Click to view the full PDF of ISO 3055:2021

Kitchen equipment — Coordinating sizes

1 Scope

This document specifies dimensions for the height, width and depth of kitchen units and worktops. Additionally, it defines the space for integrating appliances, such as sink units, ovens, refrigerators, in kitchens.

This document does not apply to customized kitchens.

This document does not apply to kitchens for commercial use (e.g. in hotels, restaurants, and hospitals).

2 Normative references

There are no normative references in this document.

3 Terms and definitions

For the purposes of this document, the following terms and definitions apply.

ISO and IEC maintain terminology databases for use in standardization at the following addresses:

— ISO Online browsing platform: available at https://www.iso.org/obp

— IEC Electropedia: available at https://www.electropedia.org/

3.1 Worktop

3.1.1
worktop
solid horizontal element attached to the top of a free standing or floor standing kitchen unit to provide a working surface

3.1.2
height of worktop
vertical distance from the floor to the top of the worktop

Note 1 to entry: See Figure 1, h_1.

3.1.3
depth of worktop
horizontal distance from the front edge to the rear edge of the worktop

Note 1 to entry: See Figure 2, l_1.

3.1.4
depth of working area
horizontal distance from the front edge of the worktop to the wall or wall attachment

Note 1 to entry: See Figure 2, l_5.

Note 2 to entry: A wall attachement is typically recess panelling or wall end profiles.

STANDARDSISO.COM : Click to view the full PDF of ISO 3055:2021

© ISO 2021 – All rights reserved

3.1.5
overhang of the worktop
horizontal distance from the front edge of the worktop to the face of the front of the kitchen unit or the front of the appliance, measured at right angles to the front of the kitchen unit

Note 1 to entry: See Figure 2, l_2.

3.1.6
distance between cooking hob and extractor hood
vertical distance from the upper surface of the pan base to the lower edge of the extractor hood

Note 1 to entry: See Figure 1, h_{10}.

Note 2 to entry: The required distance depends e.g. on the type of energy source for the cooking hob.

3.2 Kitchen unit

3.2.1
unit
item of storage furniture

3.2.2
free standing kitchen unit
kitchen island
kitchen unit to be supported by a floor and not to be attached to a ceiling or wall

Note 1 to entry: See Figure 2 b).

3.2.3
floor standing kitchen unit
kitchen unit intended to be supported by a floor

3.2.4
wall hanging kitchen unit
kitchen unit intended to be entirely supported by a vertical structure

3.2.5
installation height of the floor standing kitchen unit
vertical clear distance from the floor to the bottom of the worktop

Note 1 to entry: See Figure 1, h_2.

3.2.6
height of the kitchen unit
distance from the top surface of the kitchen unit to the underside of the kitchen unit

Note 1 to entry: See Figure 1, h_3.

3.2.7
total depth of the kitchen unit
horizontal distance from the front face to the rear edge of the kitchen unit excluding protruding parts

Note 1 to entry: See Figure 2, l_3.

Note 2 to entry: Protruding parts are e.g. handles, knobs or operating elements.

3.2.8
depth of the kitchen unit
horizontal distance from the front edge of the kitchen unit to the rear edge of the kitchen unit

Note 1 to entry: See Figure 2, l_4.

STANDARDSISO.COM : Click to view the full PDF of ISO 3055:2021

© ISO 2021 – All rights reserved

3.2.9
height of the feet or height of the base
vertical distance from the surface of the floor to the underside of the kitchen unit

Note 1 to entry: See Figure 1, h_4.

Note 2 to entry: The height of the feet/base is not identical to the height of the plinth (see Figure 1, h_8).

3.2.10
height of the plinth
vertical distance from the surface of the floor to the top of the plinth

Note 1 to entry: See Figure 1, h_8

3.2.11
feet recess
horizontal distance from the kitchen unit front edge to the front of the feet

Note 1 to entry: See Figure 2, l_6.

3.2.12
plinth recess
horizontal distance from the front edge of the kitchen unit front to the front edge of the plinth

Note 1 to entry: See Figure 2, l_7.

3.2.13
front height for dishwashers
vertical distance from the underside of the worktop to the lower edge of the decorative panel

Note 1 to entry: See Figure 1, h_6.

3.3 Recess for appliances

3.3.1
appliance and/or furniture space
open space formed by furniture and/or appliance into which appliance or furniture are intended to be inserted

3.3.2
opening for appliance
opening or cut-out in a kitchen unit or a worktop which is intended for the installation of a built-in appliance or installation element

3.3.3
protective wall panelling
element for the rear delimitation of the wall

Note 1 to entry: See Figure 1, 1 and h_9 and Figure 2, 1.

Note 2 to entry: The protective wall panelling is generally placed between the top of the worktop and the bottom of the upper kitchen unit.

3.3.4
depth of adjusting area
horizontal distance from the kitchen unit front edge to the rear edge of the rear appliance adjusting feet

Note 1 to entry: See Figure 2, l_8.

STANDARDSISO.COM : Click to view the full PDF of ISO 3055:2021

© ISO 2021 – All rights reserved

3.4 Decorative panel

3.4.1
decorative panel
component intended to adapt a built-in or built-under appliance to match the frontal design of the adjacent kitchen unit

Note 1 to entry: See Figure 1, h_5.

3.5 Appliance definitions

3.5.1
built-in appliance
appliance with width, depth and height corresponding to the nominal kitchen unit inner dimension

Note 1 to entry: See Figure 3, w_1. See Table 1.

3.5.2
built-under appliance
appliance with width, depth and height corresponding to the nominal kitchen unit outer dimension

Note 1 to entry: See Figure 3, w_1 and w_3. See Table 1.

3.5.3
installation element
functional components of a kitchen, which require an installation opening

EXAMPLE Fitted sink, cooking hob, waste separating systems.

STANDARDSISO.COM : Click to view the full PDF of ISO 3055:2021

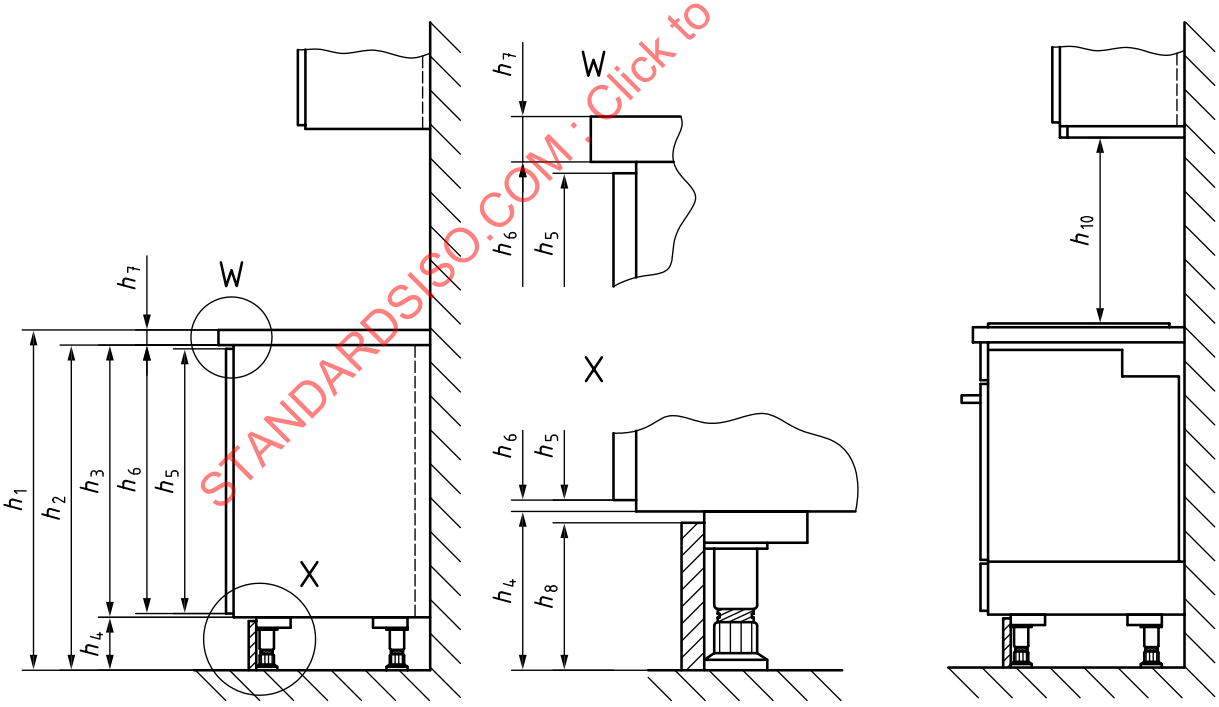

a) Kitchen unit dimensions **b) Clear distance**

© ISO 2021 – All rights reserved

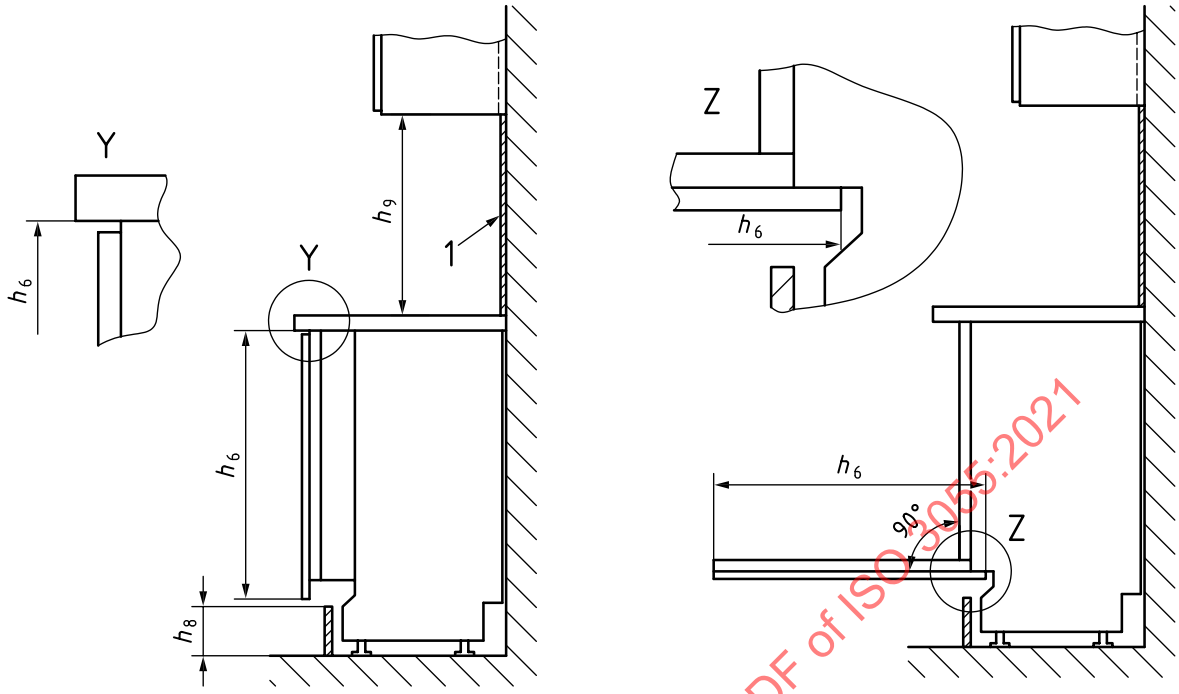

c) Diswasher closed **d) Diswasher opened**

Key

1 wall attachment (protective wall panelling)
h_1 height of the worktop
h_2 installation height of the base kitchen unit
h_3 height of the kitchen unit
h_4 height of the feet/base
h_5 hight of the decorative panel
h_6 front height for dishwashers
h_7 thickness of the worktop
h_8 height of the plinth
h_9 vertical distance between worktop and wall hanging kitchen unit above it
h_{10} distance between cooking hob and extractor hood

Figure 1 — Heights of kitchen units and appliances (side view)

STANDARDSISO.COM : Click to view the full PDF of ISO 3055:2021

4 Coordinating sizes

4.1 General

Only such height, depth and width dimensions are specified, which are necessary for coordination between the furniture and appliance. Other dimensions can also be selected where required.

Furniture: The heights, depths and widths of installation openings and recesses indicated in 4.2, 4.3 and 4.4 shall have only plus deviations.

Appliances: The external heights, depths and widths as specified in Tables 1 and 2 for the recess/installation opening shall have only minus deviations relative to the nominal dimensions. The location and dimensions of the installation openings for an installation element (e.g. a fitted sink in a worktop), the necessary space and the required safety distances shall be according to the installation instructions of the appliance manufacturers.

© ISO 2021 – All rights reserved

The widths of installation openings and overall widths of appliance fronts for built-in appliances are given in Table 3.

STANDARDSISO.COM : Click to view the full PDF of ISO 3055:2021

© ISO 2021 – All rights reserved

Table 1 — Height of the opening for appliances

Dimensions in millimetres

Nominal width of the kitchen unit	Height of the opening																			
	330	350	360	370	380	450	470	480	590	700	720	820	880	1 025	1 225	1 400	1 450	1 580	1 780	1 860
450	—	—	—	—	—	+	—	—	—	—	+	+	+	—	—	—	—	—	—	—
500	+	+	+	+	+	+	—	+	—	—	—	—	—	—	—	—	—	—	—	—
600	+	+	+	+	+	+	+	—	+	+	+	+	+	+	+	+	+	+	+	+
700	—	—	—	—	—	—	—	+	—	—	—	—	—	—	—	—	—	—	—	—
800	—	—	—	—	—	—	—	+	—	—	—	—	—	—	—	—	—	—	—	—
900	—	—	—	—	—	+	+	+	—	—	—	—	—	—	—	—	—	—	—	—

Tolerances of heights: $^{+10}_{0}$ mm

\+ Preference dimension

— not recommended

All height dimensions indicated refer to the minimum cabinet depth of 550 mm. The height dimensions 330 mm to 450 mm also refer to the minimum cabinet depth of 310 $^{+5}_{0}$ mm.

STANDARDSISO.COM : Click to view the full PDF of ISO 3055:2021

© ISO 2021 – All rights reserved

Table 2 — Width of recess for built-under appliances according to Figure 3 a)

Dimensions in millimetres

Nominal width of the recess w_3	Width of the recess without space requirement for fittings[a] w_1	Overall width of the appliance front /installation frame and kitchen unit frame or the decorative frame w_2
450	450_{0}^{+5}	445_{-5}^{+1}
600	600_{0}^{+5}	595_{-5}^{+1}

[a] Additional space requirement for fittings (e.g. sliding doors for cooling appliances) shall be considered.

Table 3 — Widths of installation openings and overall widths of appliance fronts for built-in appliances according to Figure 3 b)

Dimensions in millimetres

Nominal width of the kitchen unit / clear space w_3	Minimum width of the recess without space requirement for fittings[a] w_1	Overall width of the appliance front/ installation frame and kitchen unit frame w_2
450	410	445_{-5}^{+1}
500	460	495_{-5}^{+1}
600	560	595_{-5}^{+1}
700	660	695_{-5}^{+1}
800	760	795_{-5}^{+1}
900	860	895_{-5}^{+1}

[a] Additional space requirement for fittings (e.g. sliding doors for cooling appliances) shall be considered.

STANDARDSISO.COM : Click to view the full PDF of ISO 3055:2021

4.2 Height

4.2.1 Height of the worktop

The height of the worktop shall be 750_{0}^{+50} mm or 800_{0}^{+50} mm or 850_{0}^{+50} mm or 900_{0}^{+50} mm or 950_{0}^{+50} mm (see Figure 1, h_1).

It does not apply to height adjustable worktops.

Consider the intended user population when selecting the height of the worktop.

NOTE People with special needs can require different heights of the worktop.

4.2.2 Height of the recess for built-under appliances

The height of the recess for a built-under appliance shall be minimum 820 mm or minimum 870 mm or minimum 920 mm or adjustable (see Figure 1, h_2).

The value for the distance between cooking hob and extractor hood (see Figure 1, h_{10}) is determined by the manufacturer of the cooking hob and the extractor hood.

4.2.3 Height of the opening of appliances

The height of the opening for built-in appliances is specified in relation to the width of the kitchen unit according to Table 1.

© ISO 2021 – All rights reserved