INTERNATIONAL STANDARD

ISO 3070-2

Fourth edition
2016-08-01

Corrected version
2016-12-15

Machine tools — Test conditions for testing the accuracy of boring and milling machines with horizontal spindle —

Part 2: Machines with movable column along the X-axis (floor type)

Machines-outils — Conditions d'essai pour le contrôle de l'exactitude des machines à aléser et à fraiser à broche horizontale —

Partie 2: Machines à montant mobile le long de l'axe X (de type au sol)

STANDARDSISO.COM : Click to view the full PDF of ISO 3070-2:2016

Reference number
ISO 3070-2:2016(E)

© ISO 2016

STANDARDSISO.COM : Click to view the full PDF of ISO 3070-2:2016

COPYRIGHT PROTECTED DOCUMENT

© ISO 2016, Published in Switzerland

All rights reserved. Unless otherwise specified, no part of this publication may be reproduced or utilized otherwise in any form or by any means, electronic or mechanical, including photocopying, or posting on the internet or an intranet, without prior written permission. Permission can be requested from either ISO at the address below or ISO's member body in the country of the requester.

ISO copyright office
Ch. de Blandonnet 8 • CP 401
CH-1214 Vernier, Geneva, Switzerland
Tel. +41 22 749 01 11
Fax +41 22 749 09 47
copyright@iso.org
www.iso.org

Contents

Page

Foreword ... **iv**
Introduction ... **v**
1 Scope ... **1**
2 Normative references ... **1**
3 Terms and definitions ... **2**
4 Terminology and designation of axes ... **2**
5 Special remarks concerning particular elements ... **3**
5.1 Spindle heads ... 3
5.2 Tables ... 4
6 Preliminary remarks ... **5**
6.1 Measurement units ... 5
6.2 Reference to ISO 230 series of standards ... 5
6.3 Testing sequence ... 5
6.4 Tests to be performed ... 5
6.5 Measuring instruments ... 5
6.6 Software compensation ... 6
6.7 Minimum tolerance ... 6
7 Geometric tests ... **7**
7.1 Straightness and angular deviations of linear axes ... 7
7.2 Squareness and parallelism between linear axes ... 13
7.3 Fixed table independent of the machine ... 18
7.4 Boring spindle ... 22
7.5 Milling spindle ... 26
7.6 Rotary and movable table ... 28
7.7 Indexing or rotary tables ... 35
8 Checking accuracy and repeatability of positioning by numerical control ... **37**
Annex A (informative) **Geometric accuracy of axis of rotation** ... **44**
Annex B (normative) **Tests of accessory facing heads [see Figure 2 b)]** ... **48**
Annex C (informative) **Nomenclature of machine tool components in other languages** ... **52**
Bibliography ... **53**

STANDARDSISO.COM : Click to view the full PDF of ISO 3070-2:2016

© ISO 2016 – All rights reserved

Foreword

ISO (the International Organization for Standardization) is a worldwide federation of national standards bodies (ISO member bodies). The work of preparing International Standards is normally carried out through ISO technical committees. Each member body interested in a subject for which a technical committee has been established has the right to be represented on that committee. International organizations, governmental and non-governmental, in liaison with ISO, also take part in the work. ISO collaborates closely with the International Electrotechnical Commission (IEC) on all matters of electrotechnical standardization.

The procedures used to develop this document and those intended for its further maintenance are described in the ISO/IEC Directives, Part 1. In particular the different approval criteria needed for the different types of ISO documents should be noted. This document was drafted in accordance with the editorial rules of the ISO/IEC Directives, Part 2 (see www.iso.org/directives).

Attention is drawn to the possibility that some of the elements of this document may be the subject of patent rights. ISO shall not be held responsible for identifying any or all such patent rights. Details of any patent rights identified during the development of the document will be in the Introduction and/or on the ISO list of patent declarations received (see www.iso.org/patents).

Any trade name used in this document is information given for the convenience of users and does not constitute an endorsement.

For an explanation on the meaning of ISO specific terms and expressions related to conformity assessment, as well as information about ISO's adherence to the World Trade Organization (WTO) principles in the Technical Barriers to Trade (TBT) see the following URL: www.iso.org/iso/foreword.html

The committee responsible for this document is ISO/TC 39 *Machine tools*, Subcommittee SC 2 *Test conditions for metal cutting machine tools*.

This fourth edition cancels and replaces the third edition (ISO 3070-2:2007), which has been technically revised.

This corrected version of ISO 3070-2:2016 incorporates the following corrections:

— the Persian language nomenclature given in Table C.1 and Table C.2 has been corrected.

ISO 3070 consists of the following parts under the general title *Machine tools — Test conditions for testing the accuracy of boring and milling machines with horizontal spindle*:

— *Part 1: Machines with fixed column and table movable on a cross slide*

— *Part 2: Machines with movable column along the X-axis (floor type)*

— *Part 3: Machines with movable column along the Z-axis (T-bed type)*

STANDARDSISO.COM : Click to view the full PDF of ISO 3070-2:2016

 © ISO 2016 – All rights reserved

Introduction

Most horizontal spindle boring and milling machines fall into the following three categories characterized by their particular configuration:

a) machines with fixed column and table movable on a cross slide;

b) machines with movable column along the X-axis (floor type);

c) machines with movable column along the Z-axis (T-bed type).

The object of ISO 3070 is to supply information as wide and comprehensive as possible on tests which can be carried out for comparison, acceptance, maintenance or any other purpose.

This revision of this part of ISO 3070 provides additional information on tests to be performed and specifies new tolerances to better reflect the current technology.

Machining tests have been excluded from this revision of this part of ISO 3070 considering that such tests can typically be the object of agreement between manufacturer/supplier and user, (possibly) including tests that are specified in ISO 10791-7.

STANDARDSISO.COM : Click to view the full PDF of ISO 3070-2:2016

© ISO 2016 – All rights reserved

STANDARDSISO.COM : Click to view the full PDF of ISO 3070-2:2016

Machine tools — Test conditions for testing the accuracy of boring and milling machines with horizontal spindle —

Part 2: Machines with movable column along the X-axis (floor type)

STANDARDSISO.COM : Click to view the full PDF of ISO 3070-2:2016

1 Scope

This part of ISO 3070 specifies, with reference to ISO 230-1, ISO 230-7 and ISO 230-2, geometric tests, spindle tests and tests for checking the accuracy and repeatability of positioning by numerical control of horizontal spindle boring and milling machines having a movable column along the X-axis and also specifies the applicable tolerances corresponding to general-purpose, normal accuracy machines.

This type of machines are usually provided with sliding boring spindles and can be provided with universal spindle heads of the following types, whose test conditions are covered by ISO 17543-1:

— fixed or indexable heads, with accessory spindle(s) square to the Z-axis, with or without one spindle parallel to the Z-axis;

— 45° split indexable heads, with mechanical indexing of the different angular positions of the two bodies (e.g. Hirth couplings);

— 45° split continuous heads, provided with continuous positioning of the two numerically controlled axes;

— swivel heads, with two numerically controlled rotary axes perpendicular to each other.

Test conditions for accessory facing heads are specified in Annex B.

This part of ISO 3070 concerns machines having movement of the column on the bed (X-axis), vertical movement of the spindle head on the column (Y-axis), axial movement of the ram (Z-axis), axial movement of the boring spindle (W-axis), and, in most cases, one or more tables moving on a bed parallel to the spindle (R-axis) and rotating around a vertical axis (B-axis).

This part of ISO 3070 deals only with the verification of the accuracy of the machine. It does not apply to the operational testing of the machine (e.g. vibration, abnormal noise, stick-slip motion of components) nor to machine characteristics (e.g. speeds, feeds), as such checks are generally carried out before testing the accuracy.

2 Normative references

The following documents, in whole or in part, are normatively referenced in this document and are indispensable for its application. For dated references, only the edition cited applies. For undated references, the latest edition of the referenced document (including any amendments) applies.

ISO 230-1:2012, *Test code for machine tools — Part 1: Geometric accuracy of machines operating under no-load or quasi-static conditions*

ISO 230-2:2014, *Test code for machine tools — Part 2: Determination of accuracy and repeatability of positioning of numerically controlled axes*

ISO 230-7:2015, *Test code for machine tools — Part 7: Geometric accuracy of axes of rotation*

© ISO 2016 – All rights reserved

3 Terms and definitions

For the purposes of this document, the following terms and definitions apply.

3.1
boring operation
machining operation for generating holes of various sizes and geometries in which the principal cutting motion is the rotation of a single-point cutting tool against the non-rotating workpiece and where the cutting energy is brought by the cutting tool rotation

Note 1 to entry: Boring the diameter of cylindrical, conical, blind or through holes to the required size is achieved by using a boring bar to locate the cutting edge of the boring tool in a well-defined position with respect to the axis average line of the boring spindle.

Note 2 to entry: In the case of coaxial bores situated on opposite faces of the same workpiece, the operation may be carried out using the sliding boring spindle, if it can work through all the workpiece, or turning the table 180º to bore the opposite side of the workpiece (reverse boring).

3.2
milling operation
machining operation to generate surfaces of various geometries in which the principal cutting motion is the rotation of a cutting tool with multiple cutting edges against the non-rotating workpiece and where the cutting energy is brought by the cutting tool rotation

Note 1 to entry: Milling operations mostly involve face milling or end milling. The tools are mounted either in the boring spindle taper (see Figure 2) or, as for face milling cutters, on the milling spindle nose.

3.3
boring and milling machine
machine tool in which boring and milling operations are executed

4 Terminology and designation of axes

In a boring and milling machine, cutting movement is generated by the rotation of the spindle(s) and, possibly, of the facing head.

The feed movements are as follows:

a) transverse movements of the column on the bed (X-axis);

b) vertical movement of the spindle head (Y-axis);

c) axial movement of the ram (Z-axis);

d) axial movement of the spindle (W-axis);

e) axial movement of the table (R'-axis), where available;

f) possible (optional) movement of radial facing slide (U-axis);

g) possible (optional) movement of the rotary table (B'-axis).

Figure 1 shows two typical configurations of such machines.

The designation of the configuration with fixed table is: w b X Y Z W (C) t whereas the designation of the configuration with roto-translating table is: w B' R' b X Y Z W (C) t.

NOTE The foundation is very important for these machine tool configurations. The designation "b" for these machines typically includes the bed on the workpiece side, the foundation, and the bed on the tool side.

Table 1 provides the nomenclature for various structural components of machines shown in Figure 1.

STANDARDSISO.COM : Click to view the full PDF of ISO 3070-2:2016

 © ISO 2016 – All rights reserved

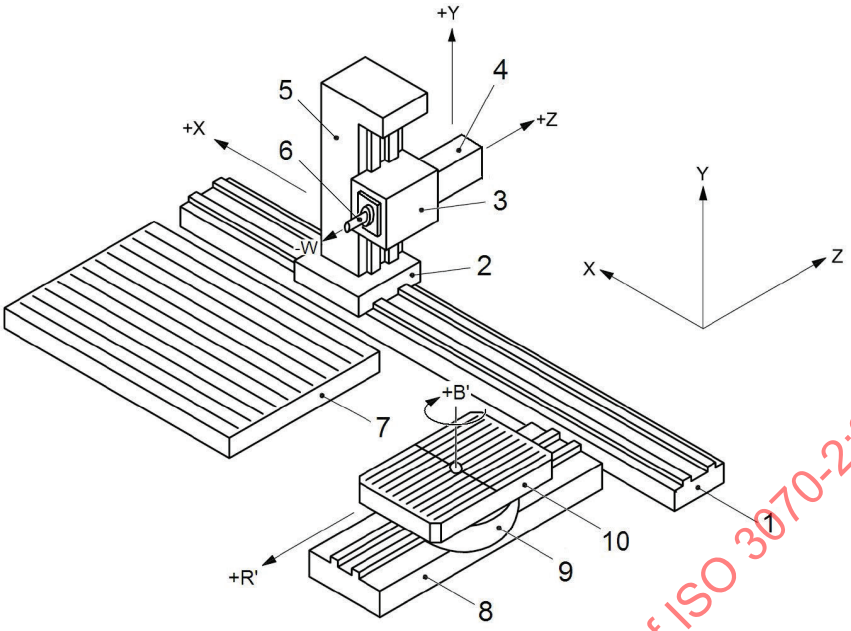

NOTE For elements 1 to 10, see Table 1.

Figure 1 — Machine with movable column along the X-axis with (optional) roto-translating table

Table 1 — Nomenclature (see Figure 1)

Figure 1 ref.	English	French	Russian
1	bed	banc	станина
2	column base	base du montant	основание стойки
3	spindle head	chariot porte-broche	шпиндельная бабка
4	ram	coulant	подвижный корпус шпинделя
5	column	montant	стойка
6	spindle	broche	шпиндель
7	fixed table	table fixe	неподвижный стол
8	table bed	banc de la table	основание стола
9	rotary table saddle	traînard de la table rotative	каретка поворотного стола
10	rotary table	table rotative	поворотный стол
NOTE In addition to the terms used in the three ISO official languages, presented in this table, Table C.1 provides the equivalent terms in Italian and Persian; these are published under the responsibility of the member body for Italy (UNI) and Iran (ISIRI) and are given for information only. Only the terms given in the official languages can be considered as ISO terms.			

STANDARDSISO.COM : Click to view the full PDF of ISO 3070-2:2016

5 Special remarks concerning particular elements

5.1 Spindle heads

Reference should be made to Figure 2 for examples of the various types of head. Related nomenclature is given in Table 2.

Facing heads generally have a radial facing slide and in most cases are accessories. Relevant geometric tests are specified in Annex B.

© ISO 2016 – All rights reserved

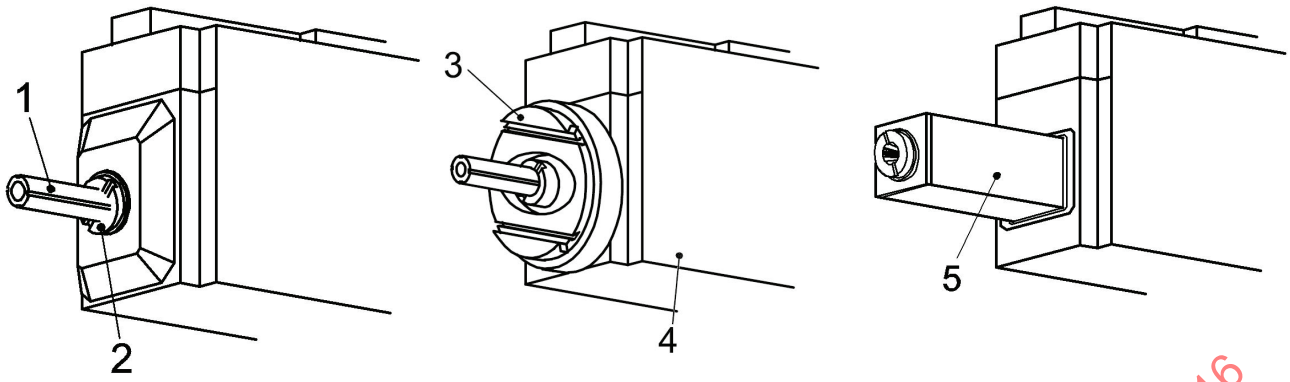

a) Headstock for boring and milling **b) Headstock with facing head** **c) Headstock with ram**

NOTE For elements 1 to 5, see Table 2.

Figure 2 — Types of headstocks

Table 2 — Nomenclature (see Figure 2)

Figure 2 ref.	English	French	Russian
1	boring spindle	broche d'alésage	расточный шпиндель
2	milling spindle	broche de fraisage	фрезерный шпиндель
3	facing head	plateau à surfacer	планшайба
4	headstock with facing head	bélier avec plateau à surfacer	шпиндельная бабка с планшайбой
5	ram	coulant	подвижный корпус шпинделя

NOTE In addition to the terms used in the three ISO official languages, given in this table, Table C.2 provides the equivalent terms in Italian and Persian; these are published under the responsibility of the member body for Italy (UNI) and Iran (ISIRI) and are given for information only. Only the terms given in the official languages can be considered as ISO terms.

5.2 Tables

In most cases, this type of machines is provided with both fixed tables and movable tables with linear and rotary movements.

The rotary movement of the table may be used for the following purposes:

a) angular positioning of the workpiece;

b) as a circular work feed for milling operations;

c) circular cutting movements for turning operations.

STANDARDSISO.COM : Click to view the full PDF of ISO 3070-2:2016

 © ISO 2016 – All rights reserved

6 Preliminary remarks

6.1 Measurement units

In this part of ISO 3070, all linear dimensions and deviations are expressed in millimetres. All angular dimensions are expressed in degrees. Angular deviations are, in principle, expressed in ratios but in some cases, microradians or arcseconds may be used for clarification purposes. The following expression should be used for the conversion of the units of angular deviations or tolerances:

0,010/1 000 = 10 µrad ≈ 2”

6.2 Reference to ISO 230 series of standards

In applying this part of ISO 3070, reference shall be made to ISO 230-1, especially for the installation of the machine before testing, warming up of the spindle and other moving components, description of the measuring methods and recommended accuracy of the test equipment.

No tests related to checking thermal effects, based on ISO 230-3, are included in this part of ISO 3070. If such tests are of interest, relevant tests in ISO 10791-10 shall be referred to.

In the “Observations” block of the tests described in the following subclauses, the instructions are preceeded by a reference to the corresponding clause or subclause in ISO 230-1, ISO 230-2 or ISO 230-7 in cases where the test concerned is in compliance with the specifications of one or another of those parts of ISO 230.

6.3 Testing sequence

The sequence in which the tests are presented in this part of ISO 3070 in no way defines the practical order of testing. In order to make the mounting of instruments or gauging easier, tests may be performed in any order.

It is nevertheless recalled that angular deviations affect straightness measurements; therefore, best practice would suggest to perform tests related to angular error motions prior to straightness measurements.

6.4 Tests to be performed

When testing a machine, it is not always necessary or possible to carry out all the tests described in this part of ISO 3070. When the tests are required for acceptance purposes, it is up to the user to choose, in agreement with the supplier/manufacturer, those tests relating to the components and/or the properties of the machine which are of interest. ISO 230-1:2012, Annex A provides valuable information about selection of primary and secondary axes and associated tests. These tests are to be clearly stated when ordering a machine. The mere reference to this part of ISO 3070 for the acceptance tests, without specifying the tests to be carried out or without agreement on the relevant expenses, cannot be considered as binding for any contracting party.

6.5 Measuring instruments

Measuring instruments indicated in the tests described in the following subclauses are examples only. Other instruments capable of measuring the same quantities and having the same, or a smaller, measurement uncertainty can be used. Reference shall be made to ISO 230-1:2012, Clause 5, which indicates the relationship between measurement uncertainties and the tolerances.

When a “dial gauge” is referred to, it can mean not only dial test indicators (DTI), but any type of linear displacement sensor such as analogue or digital dial gauges, linear variable differential

STANDARDSISO.COM : Click to view the full PDF of ISO 3070-2:2016

© ISO 2016 – All rights reserved

transformer (LVDTs), linear scale displacement gauges, or non-contact sensors, when applicable to the test concerned (see ISO 230-1:2012, Clause 4).

Similarly, when a “straightedge” is referred to, it can mean any type of straightness reference artefact, such as a granite or ceramic or steel or cast iron straightedge, one arm of a square, one generating line on a cylinder square, any straight path on a reference cube, or a special, dedicated artefact manufactured to fit in the T-slots or other references.

In the same way, when a “square” is mentioned, it can mean any type of squareness reference artefact, such as a granite or ceramic or steel or cast iron square, a cylinder square, a reference cube, or, again, a special, dedicated artefact.

When “3D probe” is referred to, it means three displacement sensors, housed in a nest, used to measure the changes in the position of the centre of a precision sphere; when the nest and the sphere are moved together along a programmed tool path.

6.6 Software compensation

When built-in software facilities are available for compensating geometric, positioning, contouring and thermal deviations, their use during these tests should be based on agreement between manufacturer/supplier and user, with due consideration to the machine tool intended use, e.g. if the intended use of the machine tool is with or without software compensation for geometric errors. When the software compensation is used, this shall be stated in the test report.

It shall be noted that when software compensation is used, some machine tool axes cannot be locked for test purposes.

Valuable information on numerical compensation of geometric errors can be gathered in ISO/TR 16907.

6.7 Minimum tolerance

By mutual agreement, manufacturer/supplier and user can establish the tolerance for a measuring length different from that given in the tests described in the following clauses. However, it shall be considered that the minimum value of tolerance is 0,005 mm.

STANDARDSISO.COM : Click to view the full PDF of ISO 3070-2:2016

© ISO 2016 – All rights reserved

7 Geometric tests

7.1 Straightness and angular deviations of linear axes

Object | **G1**

Checking of the straightness of the column movement (X-axis):

a) in the vertical XY plane, E_{YX};

b) in the horizontal ZX plane, E_{ZX}.

Diagram

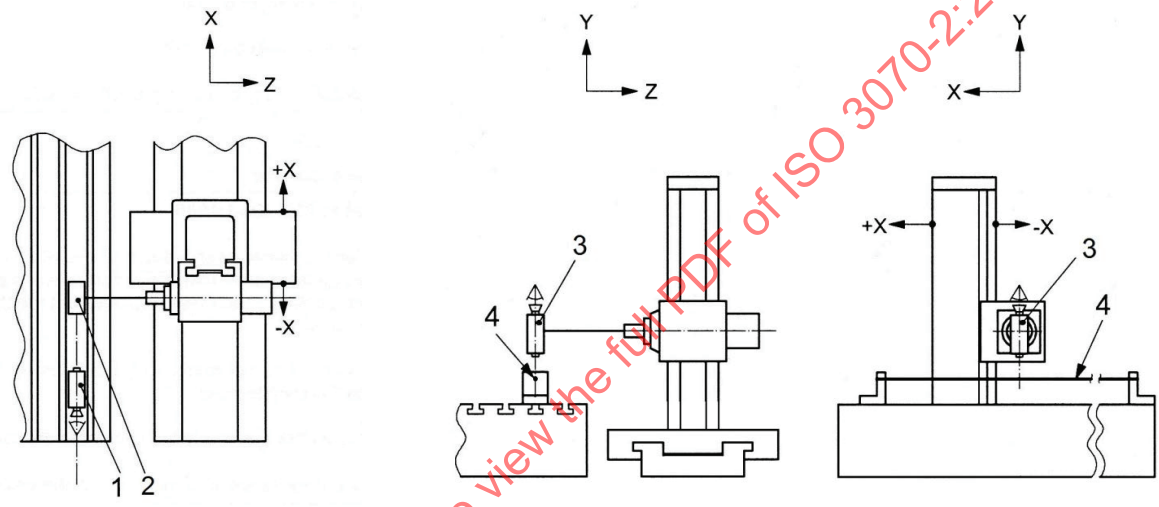

for a) and b) **for b) only**

Key
1 alignment telescope
2 telescope target
3 microscope
4 taut wire

Tolerance

	for measuring length up to:				**Measured deviations**
	5 000	10 000	15 000	20 000	
for a)	0,07	0,14	0,21	0,29	a)
for b)	0,06	0,11	0,16	0,21	b)

For measuring lengths over 20 000, the tolerance shall be agreed upon between manufacturer/supplier and user.

Measuring instruments

Optical methods and, for b) only, microscope and taut wire.

Observations and references to ISO 230-1:2012, 8.2.2.1 and 8.2.2.3

a) Taut wire is not recommended because of the sag of the wire. The alignment telescope may be fixed on the work-holding table such that the optical beam is parallel to the X-axis movement of the column or the lack of parallelism shall be considered in the measurement.

If the spindle can be locked, the telescope target may be mounted on it. If the spindle cannot be locked, mount the telescope target on the spindle head.

b) The microscope shall be fixed on the spindle, if it can be locked, or on the spindle head.

For a) and b): Measurements shall be carried out on at least six positions along the travel, with equally spaced steps not exceeding 500.

Measurements shall be at mid travel of the ram travel with the spindle retracted or otherwise, measurement location shall be reported.

STANDARDSISO.COM : Click to view the full PDF of ISO 3070-2:2016

© ISO 2016 – All rights reserved

Object	**G2**
Checking of the angular deviation of the column movement (X-axis): a) in the XY plane, E_{CX} (pitch); b) in the YZ plane, E_{AX} (roll); c) in the ZX plane, E_{BX} (yaw).	

Diagram

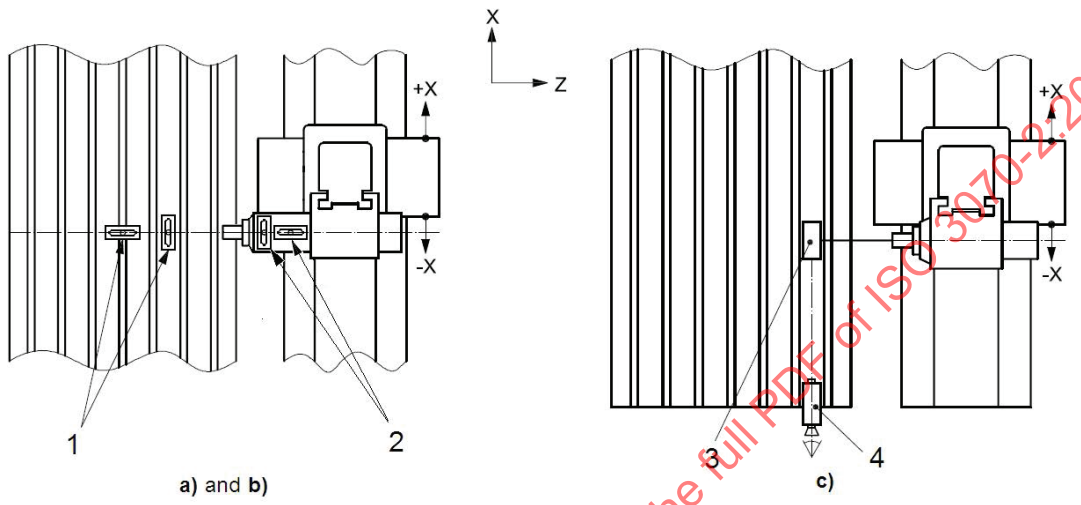

Key
1 reference levels
2 measuring levels
3 mirror
4 auto-collimator

Tolerance	**Measured deviations**
for a), b) and c):	
X ≤ 4 000: 0,04/1 000	a)
X > 4 000: 0,06/1 000	b)
Local tolerance: 0,02/1 000 for any measuring length of 500	c)

Measuring instruments

a) Precision level, laser interferometer or other optical angular deviation measuring instruments.

b) Precision level.

c) Laser interferometer or other optical angular deviation measuring instruments.

Observations and references to ISO 230-1:2012, 3.4.16 and 8.4

The measuring level or the mirror shall be placed on the ram.

a) E_{CX} (pitch) in the X-axis direction (with optical instruments set vertically).

b) E_{AX} (roll) in the Z-axis direction.

c) E_{BX} (yaw) with optical instruments set horizontally.

When levels are used, a reference level shall be located on the fixed table and the ram shall be in the middle of the travel range (Z-axis). Several preliminary movements of the column should be carried out with the reference level in different positions on the fixed table in order to check whether the X-axis motion causes an angular movement of any part of the fixed table or the bed(s) of the rotary table(s). In this last case, differential measurements of the two angular movements shall be made and this shall be stated.

For a), b) and c): Measurements shall be carried out on at least six positions along the travel, with equally spaced steps not exceeding 500.

Measurement location shall be reported.

STANDARDSISO.COM : Click to view the full PDF of ISO 3070-2:2016

© ISO 2016 – All rights reserved

Object	**G3**
Checking of the straightness of the ram movement (Z-axis): a) in the vertical YZ plane, E_{YZ}; b) in the horizontal ZX-plane, E_{XZ}.	

Diagram

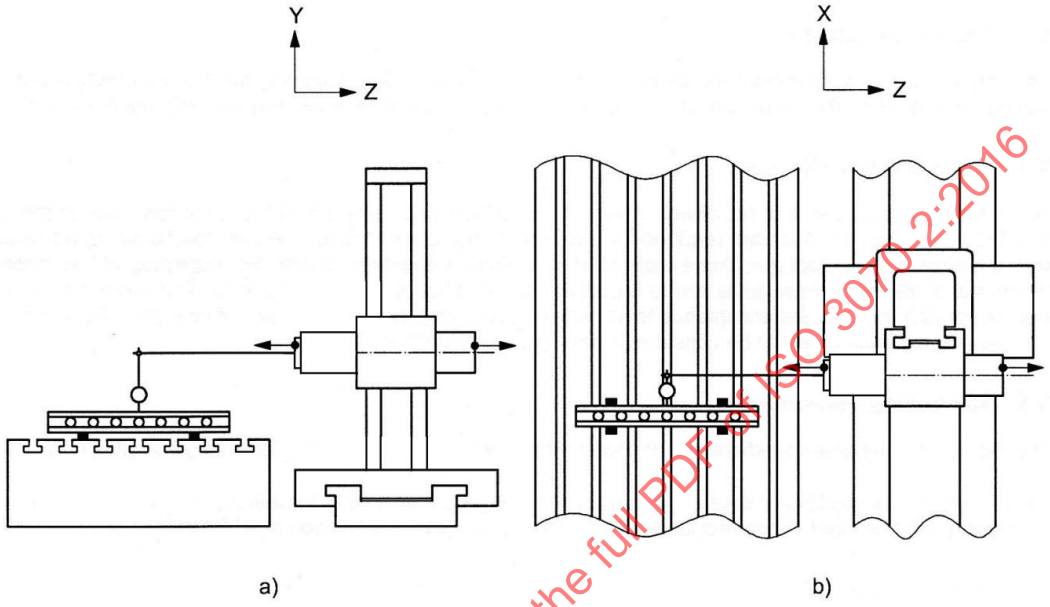

Tolerance	for measuring lengths up to:			**Measured deviations**
	1 000	1 500	2 000	a)
for a) and b):	0,02	0,03	0,04	b)

Local tolerance: 0,006 for any measuring length of 300.

For measuring lengths over 2 000, the tolerance shall be agreed upon between manufacturer/supplier and user.

Measuring instruments

Dial gauge and straightedge with gauge blocks or optical methods.

Observations and references to ISO 230-1:2012, 8.2.2.1 and 8.2.2.3

Set a straightedge on the table, parallel to the ram movement (Z-axis) for a) vertically and b) horizontally, or the lack of parallelism shall be considered in the measurement.

If the spindle can be locked, the dial gauge may be mounted on it. If the spindle cannot be locked, the dial gauge shall be mounted on the ram face. The stylus shall be normal to the reference face of the straightedge.

Measurements shall be carried out on at least six positions along the travel, in both direction of motion, with equally spaced steps not exceeding 300.

Measurement location shall be reported.

STANDARDSISO.COM : Click to view the full PDF of ISO 3070-2:2016

Object | **G4**

Checking of the angular deviation of the ram movement (Z-axis):

a) in the vertical YZ plane, E_{AZ} (pitch);

b) in the vertical XY plane, E_{CZ} (roll);

c) in the horizontal ZX plane, E_{BZ} (yaw).

Diagram

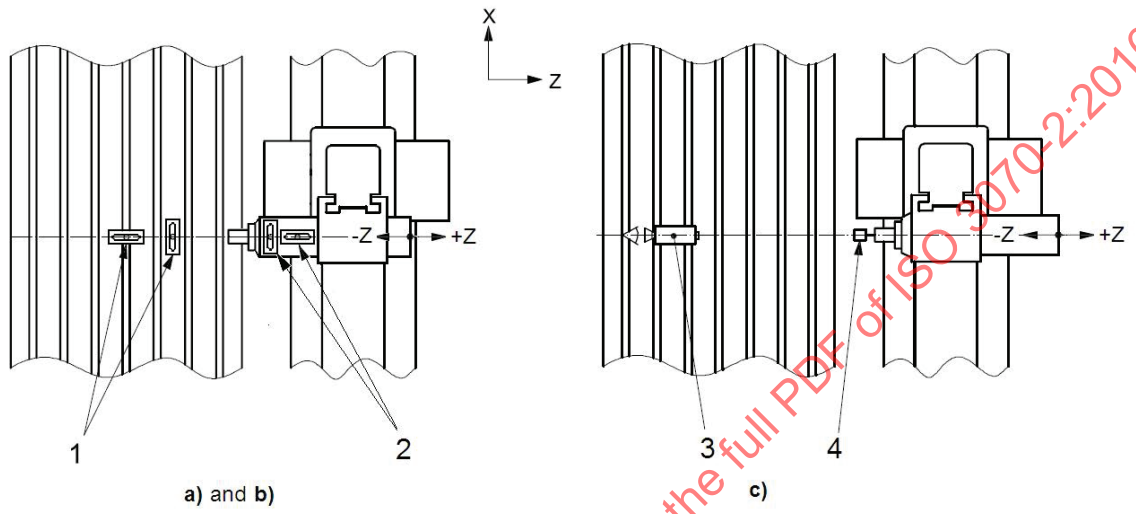

Key
1 reference levels
2 measuring levels
3 auto-collimator
4 mirror

Tolerance	for measuring lengths up to:			**Measured deviations**
	1 000	1 500	2 000	a)
for a), E_{AZ}:	0,06/1 000	0,08/1 000	0,10/1 000	b)
for b), E_{CZ} and c), E_{BZ}:	0,04/1 000	0,05/1 000	0,06/1 000	c)

For measuring lengths over 2 000, the tolerance shall be agreed upon between manufacturer/supplier and user.

Measuring instruments

a) Precision level, laser interferometer or other optical angular deviation measuring instruments.

b) Precision level.

c) Laser interferometers or other optical angular deviation measuring instruments.

Observations and references to ISO 230-1:2012, 3.4.16 and 8.4

The measuring level shall be placed on the ram, the mirror shall be placed on the ram face:

a) E_{AZ}, in the Z-axis direction (with optical instruments set vertically);

b) E_{CZ}, in the X-axis direction;

c) E_{BZ}, with optical instruments set horizontally.

When levels are used, a reference level shall be located on the fixed table (or on the rotary table), to check that the Z-axis motion does not cause an angular movement of any fixed component on the workpiece side. If angular movements are detected, differential measurements shall be carried out and this shall be stated.

For a), b) and c): Measurements shall be carried out on at least six positions along the travel, with equally spaced steps.

STANDARDSISO.COM : Click to view the full PDF of ISO 3070-2:2016

 © ISO 2016 – All rights reserved

Object | **G5**

Checking of the straightness of the spindle head movement (Y-axis):

a) in the vertical YZ plane parallel to spindle axis, E_{ZY};

b) in the vertical XY plane square to the spindle axis, E_{XY}.

Diagram

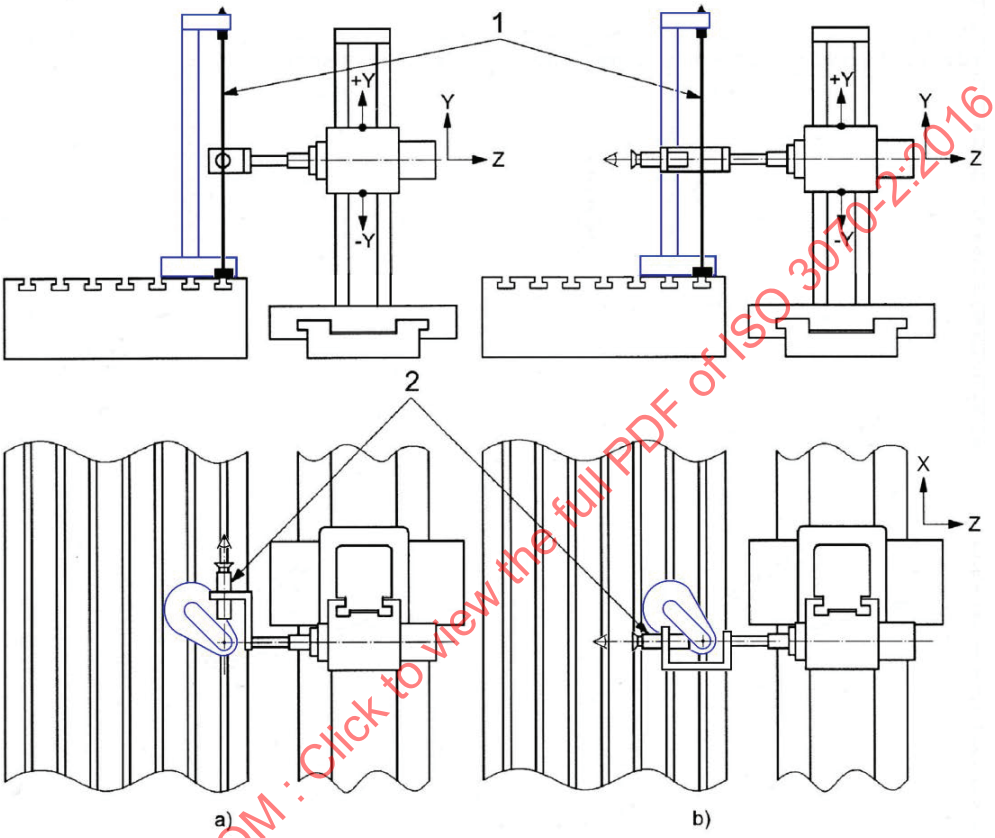

Key
1 taut wire
2 microscope

Tolerance

	for measuring lengths up to:				
	2 000	3 000	4 000	5 000	6 000
for a) and b):	0,03	0,04	0,05	0,07	0,09

For measuring lengths over 6 000, the tolerance shall be agreed upon between manufacturer/supplier and user.

Measured deviations

a)

b)

Measuring instruments

Microscope and taut wire or optical methods.

Observations and references to ISO 230-1:2012, 8.3, 8.2.2.2 or 8.2.2.3

The ram (Z-axis) shall be at mid travel with the spindle retracted.

The taut wire shall be tightened between the fixed table and another fixed part independent from the machine column.

If the spindle can be locked, the microscope or the target of the alignment telescope may be mounted on it. If the spindle cannot be locked, the microscope or the target shall be placed on the ram face.

Measurement location shall be reported.

STANDARDSISO.COM : Click to view the full PDF of ISO 3070-2:2016

Object | **G6**

Checking of the angular deviations of the spindle head movement (Y-axis):

a) in the vertical YZ plane parallel to the spindle axis, E_{AY};

b) in the vertical XY plane square to the spindle axis, E_{CY};

c) in the horizontal ZX plane, E_{BY} (roll).

Diagram

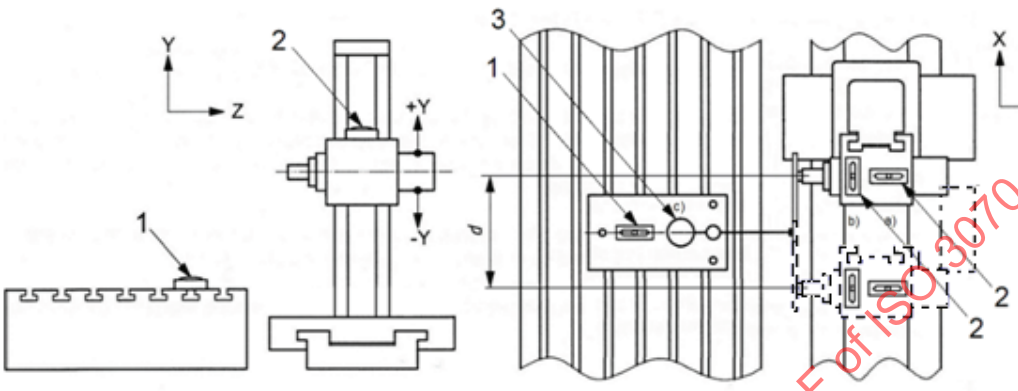

a) and b) **a), b) and c)**

Key
1 reference level
2 measuring level
3 cylinder square
d measurement distance

Tolerance for measuring lengths up to:

2 000	3 000	4 000	5 000	6 000
0,04/1 000	0,04/1 000	0,04/1 000	0,05/1 000	0,06/1 000

For measuring lengths over 6 000, the tolerance shall be agreed upon between manufacturer/supplier and user.

Measured deviations

a)

b)

c)

Measuring instruments

For a) and b): Precision level or optical angular deviation measuring instruments.

For c): Surface plate, cylindrical square, level and dial gauge or taut wire and microscope or sweeping alignment laser.

Observations and references to ISO 230-1:2012, 3.4.16 and 8.4

For a), b) and c): Measurements shall be carried out on at least six positions along the travel, with equally spaced steps not exceeding 500.

For a) and b): Place a level on the spindle head in the Z-axis direction for a) and in the X-axis direction for b). The reference level shall be located on the work holding table in the same direction of the measuring level with a view to checking that the Y-axis motion does not cause an angular movement of any fixed component on the workpiece side. Some preliminary movements of the Y-axis should be carried out with both levels, in order to check whether the Y-axis motion causes an angular movement of any part of the fixed table or the bed(s) of the rotary table(s). In this last case, differential measurements of the two angular movements shall be made and this shall be stated.

For c): Measure the E_{ZY} straightness deviation of the Y-axis by an instrument placed on a special arm with a horizontal offset *d* from the spindle axis: c 1) by a dial gauge against a cylindrical square standing on a levelled surface plate. c 2) by a microscope targeting a vertical taut wire or c 3) by a target of a sweeping alignment laser which is generating an optical XY plane. Note the readings and the relevant measuring positions on the spindle head travel (Y-axis). Turn the special arm (carrying the instrument) to the opposite side of the spindle and move the X-axis of about 2*d* in order to repeat the same readings against the same reference; the possible roll deviations of the X-axis motion shall be measured and taken into account. For c3), no X-axis movement is required. The instrument shall be reset and the new measurements shall be taken at the same heights of the previous ones and then noted. For each measurement position, calculate the algebraic difference between the two readings and then calculate the difference between maximum and minimum divided by the distance 2*d* for obtaining the angular deviation.

NOTE For machine tools not compensated by software, Y-axis roll can also be measured performing two E_{XY} measurements with a Z-axis offset.

STANDARDSISO.COM : Click to view the full PDF of ISO 3070-2:2016

 © ISO 2016 – All rights reserved

7.2 Squareness and parallelism between linear axes

Object	**G7**
Checking of the squareness between the spindle head movement (Y-axis) and the column movement (X-axis), $E_{C(0X)Y}$.	
Diagram	

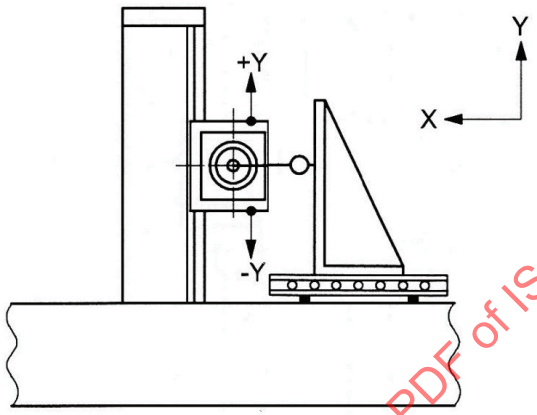

Tolerance	**Measured deviations**
0,04/1 000	

Measuring instruments

Square, straightedge, adjustable blocks and dial gauge.

Observations and references to ISO 230-1:2012, 10.3.2

Set a straightedge on the table parallel to the column movement (X-axis) using adjustable blocks or the lack of parallelism shall be considered in the measurement, and then place a square on it.

If the spindle can be locked, the dial gauge may be mounted on it. If the spindle cannot be locked, the dial gauge shall be placed on the ram face.

Apply the stylus of the dial gauge to the square, measuring in the X-direction. Position the Y-axis to measure close to one end of the square surface and zero the dial gauge.

Move the Y-axis to measure close to the other end of the square surface and note the reading. The measured squareness error, $E_{C(0X)Y}$, is the ratio between the reading and the travelled distance along the Y-axis.

STANDARDSISO.COM : Click to view the full PDF of ISO 3070-2:2016

© ISO 2016 – All rights reserved

Object	**G8**
Checking of the squareness between the spindle head movement (Y-axis) and the ram movement (Z-axis), $E_{A(0Z)Y}$ or $E_{A(0Y)Z}$.	

Diagram

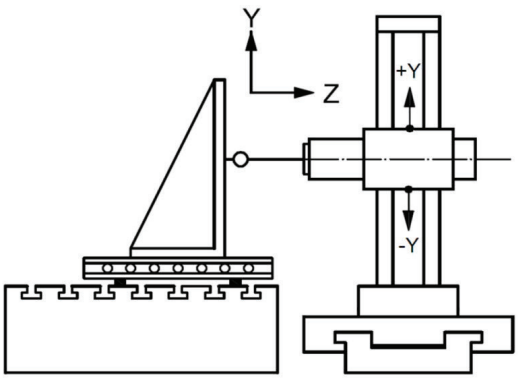

Tolerance	**Measured deviation**
0,06/1 000	

Measuring instruments

Square, straightedge, adjustable blocks and dial gauge.

Observations and references to ISO 230-1:2012, 10.3.2

Set a straightedge on the table parallel to the ram movement (Z-axis) using adjustable blocks or the lack of parallelism shall be considered in the measurement and then place a square on it.

If the spindle can be locked, the dial gauge may be mounted on it. If the spindle cannot be locked, the dial gauge shall be placed on the ram face.

Apply the stylus of the dial gauge to the square, measuring in the Z-direction. Position the Y-axis to measure close to one end of the square surface and zero the dial gauge.

Move the Y-axis to measure close to the other end of the square surface and note the reading.

The measured squareness error, $E_{A(0Z)Y}$, is the ratio between the reading and the travelled distance along the Y-axis.

Or, alternatively:

Align the straightedge so that the vertical arm of a square laid on this straightedge is parallel to the spindle head movement (Y-axis) or the lack of parallelism shall be considered in the measurement.

Apply the stylus of the dial gauge to the straightedge, measuring in the Y-direction. Retract the Z-axis and zero the dial gauge.

Move the Z-axis of the desired distance and note the reading.

The measured squareness error, $E_{A(0Y)Z}$, is the ratio between the reading and the travelled distance along the Z-axis.

STANDARDSISO.COM : Click to view the full PDF of ISO 3070-2:2016

© ISO 2016 – All rights reserved

Object	**G9**
Checking of the squareness between the ram movement (Z-axis) and the column movement (X-axis), $E_{B(0X)Z}$.	
Diagram	

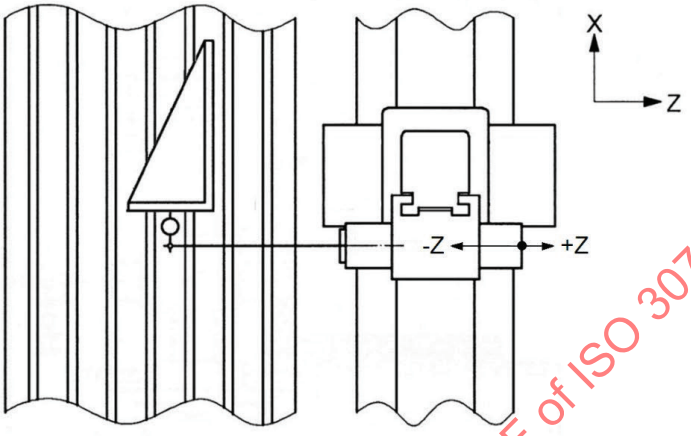

Tolerance	**Measured deviation**
0,06/1 000	

Measuring instruments

Square and dial gauge.

Observations and references to ISO 230-1:2012, 10.3.2

Set a square on the table and align one side parallel to the column movement (X-axis) or the lack of parallelism shall be considered in the measurement.

If the spindle can be locked, the dial gauge may be mounted on it. If the spindle cannot be locked, the dial gauge shall be placed on the ram face.

Apply the stylus of the dial gauge to the square, measuring in the X-direction. Position the Z-axis to measure close to one end of the square surface and zero the dial gauge.

Move the Z-axis to measure close to the other end of the square surface and note the reading. The measured squareness error, $E_{B(0X)Z}$, is the ratio between the reading and the travelled distance along the Z-axis.

STANDARDSISO.COM : Click to view the full PDF of ISO 3070-2:2016

© ISO 2016 – All rights reserved

Object	**G10a**
Checking of the parallelism between the boring spindle axial movement (W-axis) and the ram movement (Z-axis), $E_{A(0Z)W}$ in the YZ plane.	
Diagram	
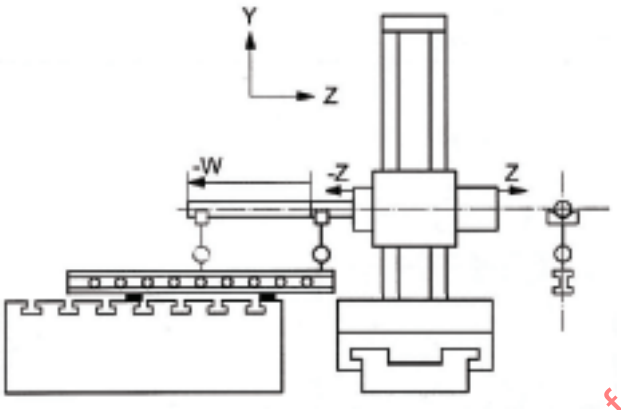	
Tolerance	**Measured deviation**
For an extension of the spindle equal to the following: 2*D*: +0,015 (upwards); 4*D*: ±0,02; 6*D*: -0,06 (downwards). where *D* is the diameter of the boring spindle. The extension of the spindle is limited to six times the spindle diameter and shall not exceed 900. The tolerance is limited to spindle diameter of 150. When the spindle diameter is over 150, the tolerance shall be agreed upon between the manufacturer/supplier and the user.	a) or, alternatively: b)
Measuring instruments	
Straightedge, adjustable blocks and dial gauge.	
Observations and references to ISO 230-1:2012, 12.3.2.3 and 10.3.2	
Place a straightedge on the table vertically in a plane containing the spindle axis and adjust it parallel to the ram movement (Z-axis), or the lack of parallelism shall be considered in the measurement. The spindle rotation shall be locked. Touch the surface of the straightedge with the dial gauge stylus and zero it. Extend the boring spindle (W-axis) to the required length and record the dial gauge reading. The measured parallelism error, $E_{A(0Z)W}$, is the ratio between the reading and the travelled distance along the W-axis.	

STANDARDSISO.COM : Click to view the full PDF of ISO 3070-2:2016

© ISO 2016 – All rights reserved

Object	**G10b**
Checking of the parallelism between the boring spindle axial movement (W-axis) and the ram movement (Z-axis), $E_{B(0Z)W}$, in the ZX plane.	
Diagram	
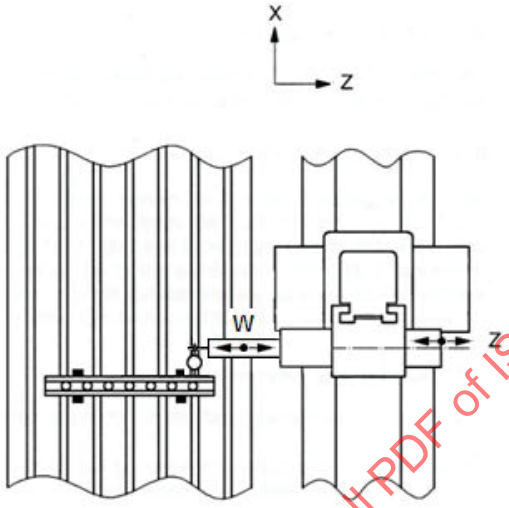	
Tolerance 0,04/1 000	**Measured deviation**
Measuring instruments Straightedge and dial gauge.	
Observations and references to ISO 230-1:2012, 12.3.2.3 and 10.3.2 Place a straightedge on the table horizontally and adjust it parallel to the ram movement (Z-axis) or the lack of parallelism shall be considered in the measurement. In order to minimize the effect of the W-axis roll on the $E_{B(0Z)W}$ measurements, ensure that the measurement trajectory on the straightedge is as close as possible to a horizontal plane containing the spindle axis. The spindle rotation shall be locked. Touch the surface of the straightedge with the dial gauge stylus and zero it. Extend the spindle to the required length and record the dial gauge reading. The measured parallelism error, $E_{B(0Z)W}$, is the ratio between the reading and the travelled distance along the W-axis.	

STANDARDSISO.COM : Click to view the full PDF of ISO 3070-2:2016

© ISO 2016 – All rights reserved

7.3 Fixed table independent of the machine

Object	**G11**
Checking of the flatness of the fixed table surface.	

Diagram

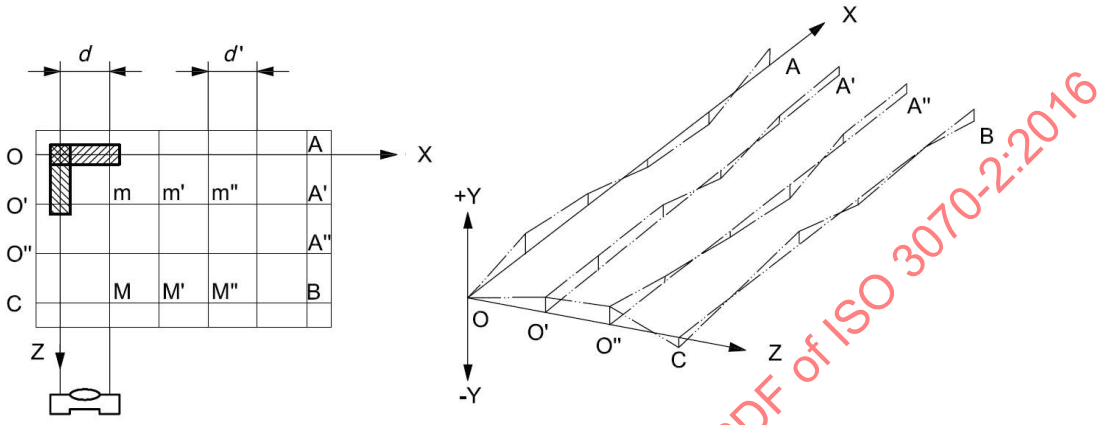

Key
d measuring distance

Tolerance	for length of the longest side of the table up to:				**Measured deviation**
	5 000	10 000	15 000	20 000	
flatness tolerance:	0,12	0,22	0,32	0,42	

For table lengths over 20 000, the tolerance shall be agreed upon between manufacturer/supplier and user.

Measuring instruments

Precision level or optical methods.

Observations and references to ISO 230-1:2012, 12.2.4 and 12.2.5

Measurements shall be carried out at a number of positions equally spaced with measuring distance, *d*, not exceeding 1/10 of the longest side of the table.

NOTE Flatness measurements can also be performed by measurements along diagonals (see ISO 230-1:2012, 12.2.42).

STANDARDSISO.COM : Click to view the full PDF of ISO 3070-2:2016

© ISO 2016 – All rights reserved

Object	**G12**
Checking of parallelism between the reference T-slot, or any other reference surface of the fixed table, and the column movement (X-axis).	

Diagram

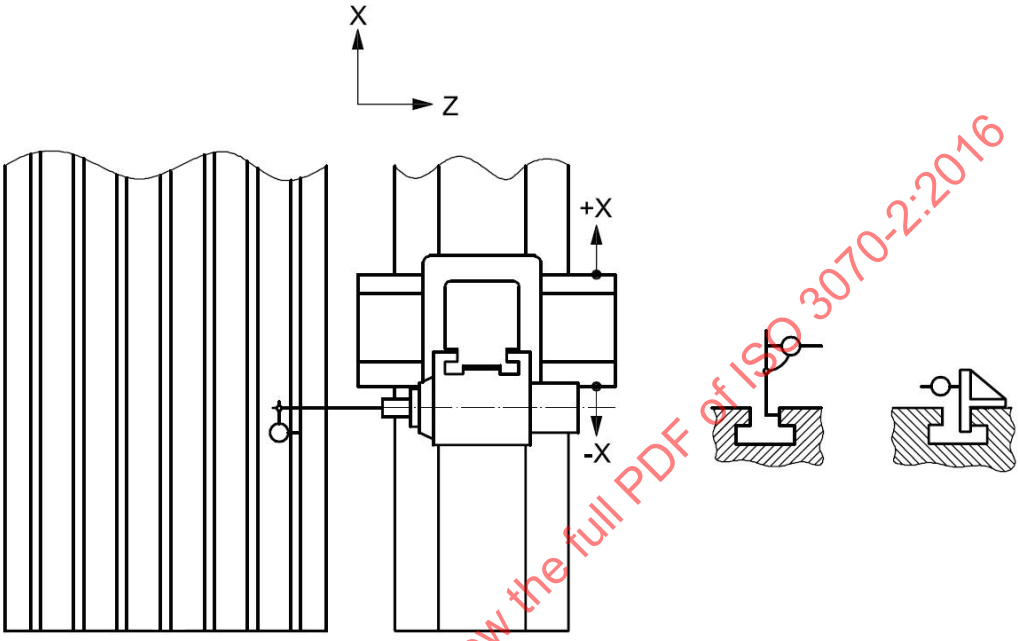

Tolerance	for length of the longest side of the table up to:				**Measured deviation**
	5 000	10 000	15 000	20 000	For a measurement distance of:
parallelism tolerance:	0,15	0,20	0,25	0,30	Over a table length of:
For table lengths over 20 000, the tolerance shall be agreed upon between manufacturer/supplier and user.					0,202 0,337

Measuring instruments

Dial gauge and cross-square.

Observations and references to ISO 230-1:2012, 12.3.2.5.2

If the spindle can be locked, the dial gauge may be mounted on it. If the spindle cannot be locked, the dial gauge shall be placed on the ram face.

Measurements shall be carried out at a number of positions equally spaced at steps not exceeding 1/10 of the longest side of the table.

Traverse the X-axis from one measurement position to the following without contact between the stylus and the reference surface. At each measurement position, either move down the Y-axis to bring the dial gauge into contact with the reference surface or insert the cross-square between the stylus and the table surface.

The parallelism error is the difference between the maximum and the minimum reading.

STANDARDSISO.COM : Click to view the full PDF of ISO 3070-2:2016

© ISO 2016 – All rights reserved

Object	**G13**
Checking of parallelism between the fixed table surface and the column movement (X-axis).	

Diagram

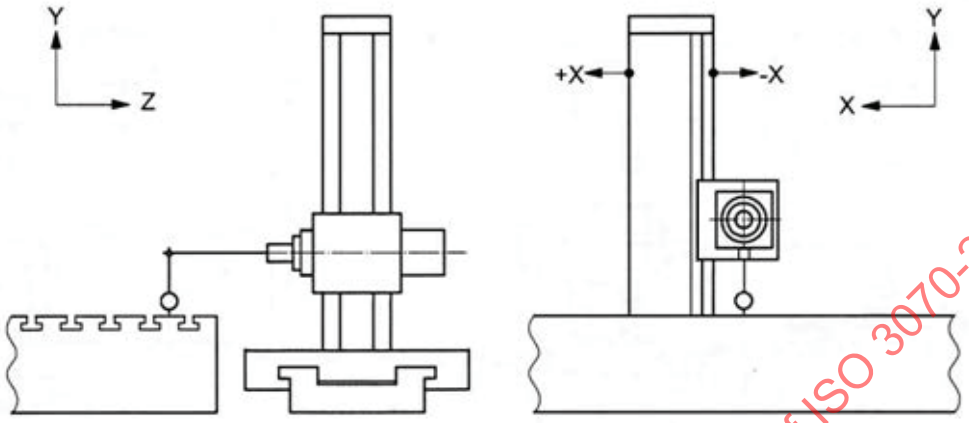

Tolerance	for length of the longest side of the table up to:				**Measured deviation**
	5000	10 000	15 000	20 000	For a measurement distance of:
parallelism tolerance:	0,10	0,20	0,30	0,40	
For table lengths over 20 000, the tolerance shall be agreed upon between manufacturer/supplier and user.					Over a table length of: 0,54 (max 0,3)

Measuring instruments

Dial gauge and gauge block or optical method.

Observations and references to ISO 230-1:2012, 12.3.2.5.2

If the spindle can be locked, the dial gauge may be mounted on it. If the spindle cannot be locked, the dial gauge shall be placed on the ram face.

The ram shall be positioned at mid-travel.

Prior to the measurement, each measurement spot may be manually smoothed by an abrasive stone, in order to minimize small inaccuracy of the table surface.

Traverse the X-axis from one measurement position to the following without contact between the stylus and the table surface. At each measurement position, insert the gauge block between the stylus and the table surface and take the reading.

The parallelism error is the difference between the maximum and the minimum reading.

STANDARDSISO.COM : Click to view the full PDF of ISO 3070-2:2016

© ISO 2016 – All rights reserved

Object	**G14**
Checking of parallelism between the surface of the fixed table and the ram movement (Z-axis).	
Diagram	
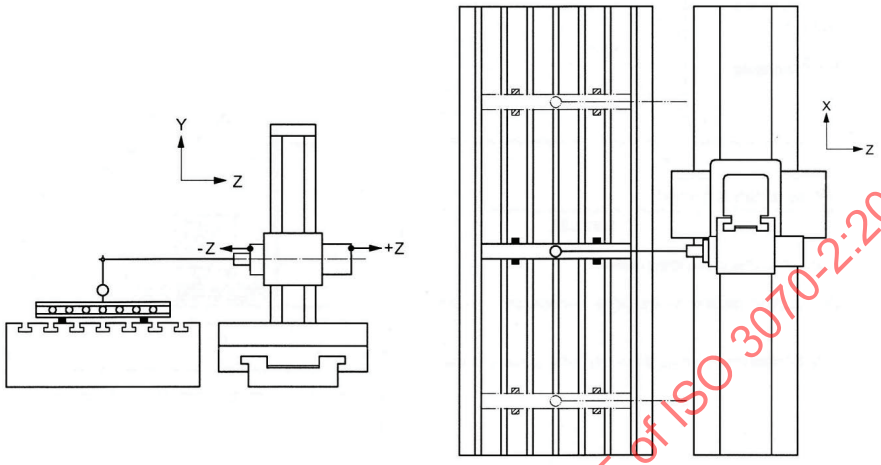	
Tolerance 0,07 over a measuring length of 1 000	**Measured deviation**
Measuring instruments Straightedge and dial gauge.	
Observations and references to ISO 230-1:2012, 12.3.2.5.2 If the spindle can be locked, the dial gauge may be mounted on it. If the spindle cannot be locked, the dial gauge shall be placed on the ram face. This test shall be carried out in at least three positions of the column (X-axis) along the bed (at 10 %, 50 % and 90 % of travel/table length). Set the straightedge on the fixed table in Z-axis direction parallel to the table surface; traverse the ram through the measuring length and note the variation in readings. Without using the straightedge, direct measurement of the table surface using dial gauge and gauge block is also possible. The parallelism error is the difference between the maximum and the minimum reading.	

STANDARDSISO.COM : Click to view the full PDF of ISO 3070-2:2016

© ISO 2016 – All rights reserved

7.4 Boring spindle

Object | **G15**

Checking of the boring spindle:

a) run-out of the internal taper, spindle retracted:

1) close to the spindle gauge line;

2) at a distance of 300 from the spindle nose;

b) run-out of the external diameter:

1) with the spindle retracted;

2) with the spindle extended 300;

c) axial error, with the spindle retracted, $E_{Z(C)}$.

Diagram

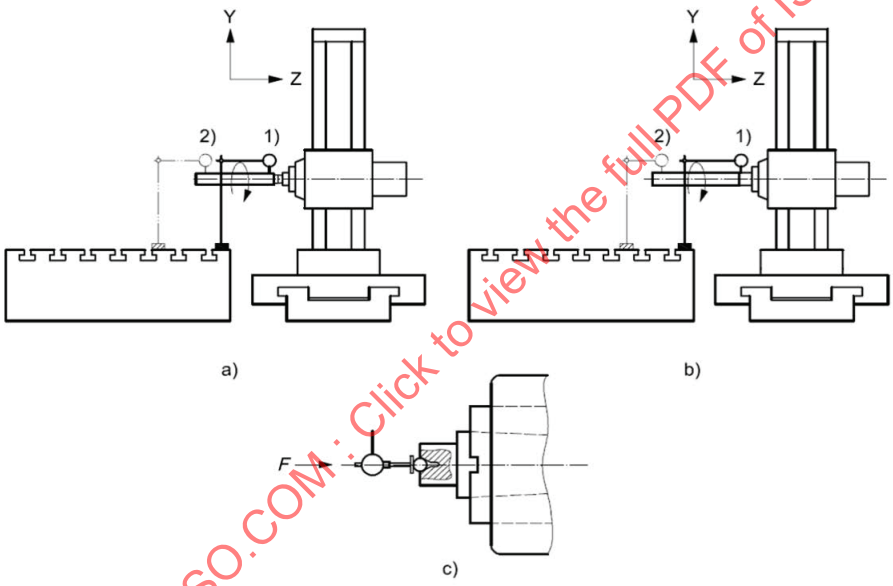

Tolerance

		$D \leq 125$	$125 < D \leq 200$	$D > 200$
for a) and b)	1)	0,01	0,015	0,02
	2)	0,02	0,03	0,04
for c)		0,01	0,015	0,02

where D is the diameter of the boring spindle.

Measured deviations

a)
1)
2)
b)
1)
2)
c)

Measuring instruments

For a) and b): dial gauge with test mandrel.

For c) dial gauge with flat-ended stylus and test sphere.

Observations and references to for a) and b) ISO 230-1:2012, 12.5.2; for c) ISO 230-7:2015, 5.4.4

The value and the direction of application of the force, F, shall be specified by the manufacturer/supplier. When preloaded bearings are used, no force needs to be applied.

NOTE Test AR1 is a spindle test for evaluating error motions of the spindle axis of rotation.

STANDARDSISO.COM : Click to view the full PDF of ISO 3070-2:2016

© ISO 2016 – All rights reserved

Object	**G16**
Checking of parallelism between the axis average line of the boring spindle axis of rotation and the ram movement (Z-axis): a) in the vertical YZ-plane, $E_{A(0Z)(C)}$; b) in the horizontal ZX-plane, $E_{B(0Z)(C)}$.	
Diagram	
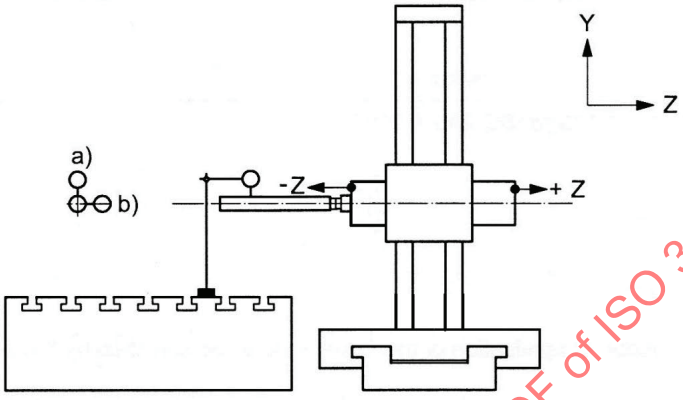	
Tolerance For a) and b) 0,02/300	**Measured deviations** a) b)
Measuring instruments Test mandrel and dial gauge	
Observations and references to ISO 230-1:2012, 10.1.4 Measurements are performed by moving the Z-axis and shall be carried out with the aid of the test mandrel mounted in the spindle nose. The boring spindle (W-axis) shall be retracted. Carry out the measurement at the mean position of run-out of the spindle rotation or evaluate the mean value of measurements taken at two positions of the spindle rotation at 180° apart. The orientation of the parallelism deviation between the boring spindle axis and the Z-axis, in both planes, shall be noted.	

STANDARDSISO.COM : Click to view the full PDF of ISO 3070-2:2016

© ISO 2016 – All rights reserved

Object	**G17**
Checking of squareness between the axis average line of the boring spindle axis and the column movement (X-axis), $E_{B(0X)(C)}$.	

Diagram

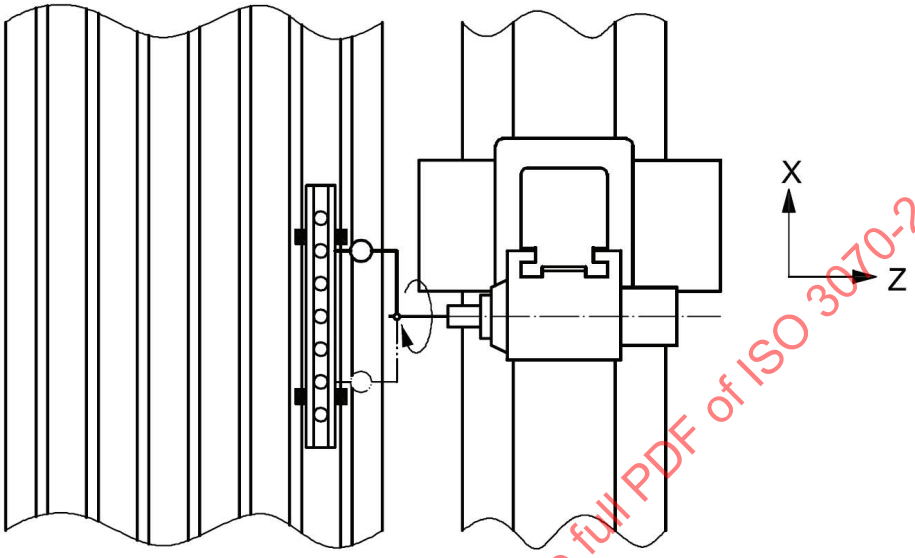

Tolerance	**Measured deviation**
0,04/1 000 (1 000 is the distance between the two measuring points touched)	

Measuring instruments

Dial gauge, special arm and straightedge.

Observations and references to ISO 230-1:2012, 10.3.3

The ram (Z-axis) shall be locked. The spindle shall be retracted.

Set the straightedge horizontally on the fixed table and align it to the column movement (X-axis) or the lack of parallelism shall be considered in the measurement.

Set the dial gauge on the special arm mounted to the spindle. Touch the surface of the straightedge with the dial gauge stylus and zero it.

Turn the boring spindle until the stylus touches the reference face of the straightedge again and note the reading.

The difference between the two readings divided by the distance between the two measuring points is the squareness error, $E_{B(0X)(C)}$.

The special arm shall be stiff enough so as to prevent any possible reading errors due to its opposite deflections in the two measurement positions.

The X-axis position and the Y-axis position of the test shall be recorded.

The value of the angle, α, being less than, equal to or greater than 90°, shall be noted.

STANDARDSISO.COM : Click to view the full PDF of ISO 3070-2:2016

© ISO 2016 – All rights reserved

Object	**G18**
Checking of squareness between the axis average line of the boring spindle axis and the spindle head movement (Y-axis), $E_{A(0Y)(C)}$.	

Diagram

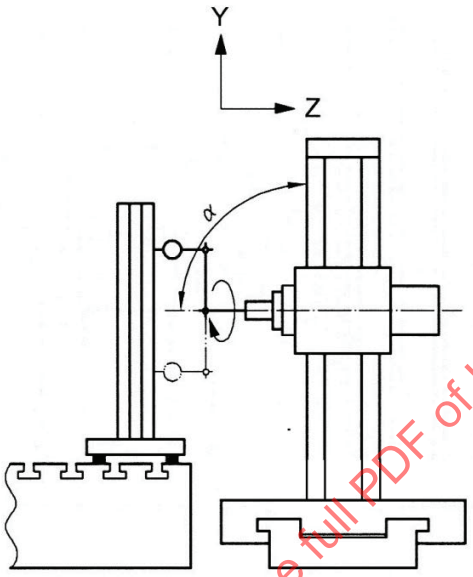

Tolerance	**Measured deviation**
0,04/1000 with $\alpha \leq 90°$ (1 000 is the distance between the two measuring points touched)	

Measuring instruments

Square, surface plate, adjustable blocks, dial gauge and special arm

Observations and references to ISO 230-1:2012, 10.3.3

Set a surface plate on the table and then place a cylindrical square on it. Adjust the surface plate until the square is parallel to the spindle head movement (Y-axis) using adjustable blocks or the lack of parallelism shall be considered in the measurement.

The spindle and the ram shall be retracted.

Set the dial gauge on the special arm mounted to the spindle. Place the stylus of the dial gauge against the square. Zero the dial gauge. Turn the boring spindle until the stylus touches the square again. Record the reading.

The difference between the two readings divided by the distance between the two measuring points is the measured squareness error, $E_{A(0Y)(C)}$.

This test may also be performed without the square, by placing the dial gauge support on the table and touching with the stylus a point on a special arm fixed on the spindle, thus avoiding any possible deflection of the dial gauge arm and making the reading easier. The spindle axis shall be rotated 180° and the Y-axis shall be moved in order to make the stylus touch the special arm in the same point. In this case, the measurement is influenced by the E_{ZY} straightness error of the Y-axis.

The special arm shall be stiff enough so as to prevent any possible reading errors due to its opposite deflections in the two measurement positions.

The Y-axis position of the test shall be recorded.

The value of the angle, α, being less than, equal to or greater than 90°, shall be noted.

STANDARDSISO.COM : Click to view the full PDF of ISO 3070-2:2016

© ISO 2016 – All rights reserved

7.5 Milling spindle

Object	**G19**
Checking of the milling spindle nose: a) run-out of the external cylindrical centring surface; b) axial error, $E_{Z(C)}$; c) face run-out of the spindle nose (including axial error).	

Diagram

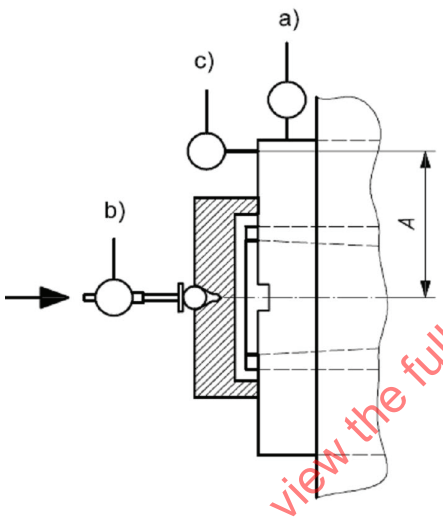

Tolerance					**Measured deviations**
		$D \leq 125$	$125 < D \leq 200$	$D > 200$	a)
for a) and b)	1)	0,01	0,015	0,02	b)
	2)	0,01	0,015	0,02	c)
for c)		0,02	0,03	0,04	

where D is the diameter of the boring spindle.

Measuring instruments

Dial gauge [with flat-ended stylus for b)]

Observations and references for a) and c) to ISO 230-1:2012, 12.5.2; for b) ISO 230-7:2015, 5.4.4.

The value and the direction of application of the force, F, shall be specified by the manufacturer/supplier. When preloaded bearings are used, no force needs to be applied.

The distance A of the dial gauge c) from the spindle axis shall be as large as possible.

NOTE Test AR1 is a spindle test for evaluating error motions of the spindle axis of rotation.

STANDARDSISO.COM : Click to view the full PDF of ISO 3070-2:2016

© ISO 2016 – All rights reserved

Object	**G20**
a) Checking of concentricity between the axis average line of the spindle and the external cylindrical centring of tools or accessories on the ram. b) Checking of squareness between the support face of tools or accessories on the ram and the axis average line of the axis of rotation of the spindle. NOTE These checks are valid only if there is a circular locating surface on the ram.	
Diagram 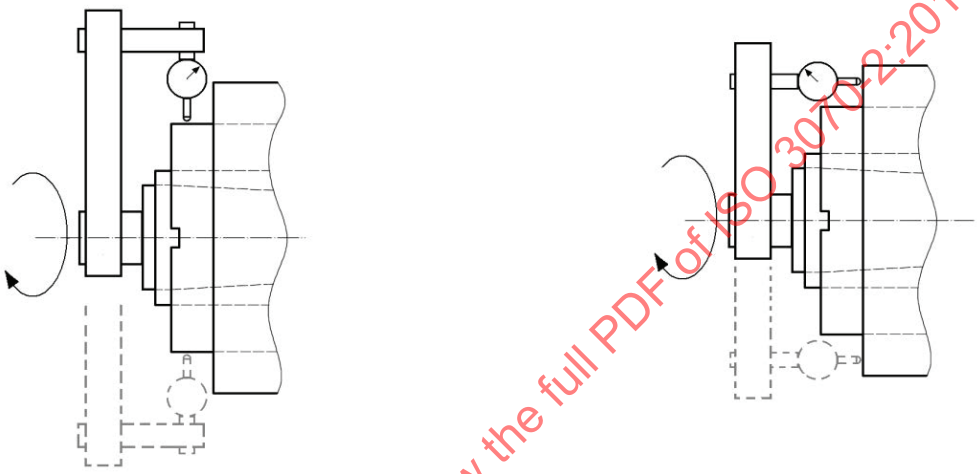 **a)** **b)**	
Tolerance a) 0,02 b) 0,02/500 (500 is the distance between the two measuring points touched)	**Measured deviations** a) b)
Measuring instruments Dial gauge and special arm	
Observations and references to ISO 230-1:2012 a) ISO 230-1:2012, 12.3.4 Concentricity deviation is the half of the maximum difference of the readings. b) ISO 230-1:2012, 12.4.8	

STANDARDSISO.COM : Click to view the full PDF of ISO 3070-2:2016

7.6 Rotary and movable table

Object	**G21**
Checking of straightness of the table slide movement (R'-axis): a) in the vertical YZ plane, E_{YR}; b) in the horizontal ZX plane, E_{XR}.	
Diagram	
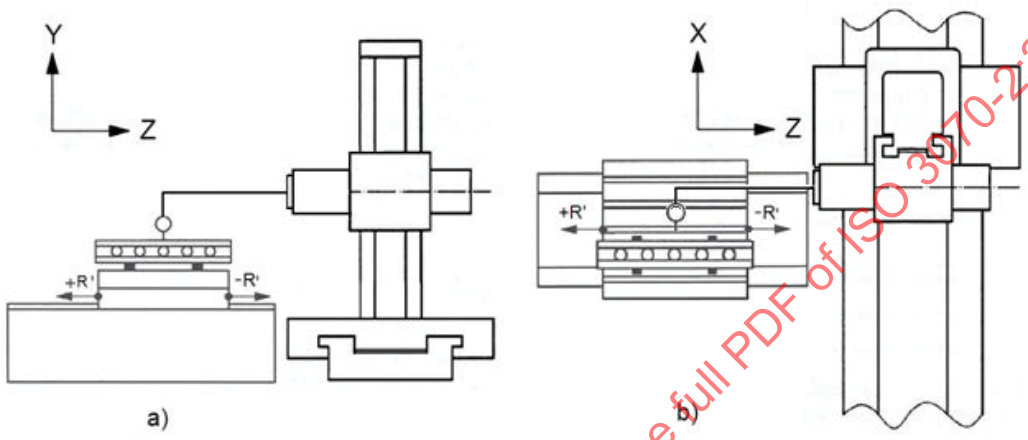	
Tolerance for a) and b) 0,02 for measuring lengths up to 1 000 Add 0,01 to the preceding tolerance for each 1 000 increase in length beyond 1 000 Maximum tolerance: 0,05	**Measured deviations** a) b)
Measuring instruments Straightedge, dial gauge and gauge blocks, or optical methods or taut wire and microscope for b).	
Observations and references to ISO 230-1:2012, 8.2.2.1, 8.2.2.3 and 8.2.2.5 Set a straightedge on the table, vertically for a) and horizontally for b), parallel to the R'-axis movement of the table slide or the lack of parallelism shall be considered in the measurement. If the spindle can be locked, the dial gauge may be mounted on it. If the spindle cannot be locked, the dial gauge shall be mounted on the ram face. The stylus shall be normal to the reference face of the straightedge. Traverse the table in the R'-axis direction and note the readings.	

STANDARDSISO.COM : Click to view the full PDF of ISO 3070-2:2016

© ISO 2016 – All rights reserved

Object	**G22**

Checking of angular deviation of the table slide movement (R'-axis):

a) in the vertical YZ plane, E_{AR} (pitch);

b) in the vertical XY plane, E_{CR} (roll);

c) in the horizontal ZX plane, E_{BR} (yaw).

Diagram

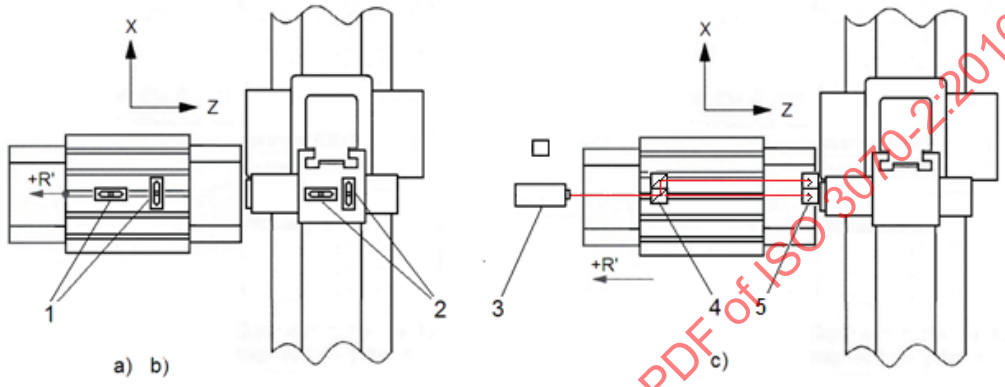

Key

1 measuring levels
2 reference levels
3 laser head
4 angle interferometer
5 retro-reflectors

Tolerance	**Measured deviations**
for a), b) and c) R ≤ 4 000: 0,04/1 000 R > 4 000: 0,06/1 000 Local tolerance: 0,02/1 000 for any measuring length of 300	a) b) c)

Measuring instruments

a) Precision levels, laser interferometer or other optical angular deviation measuring instruments.

b) Precision levels.

c) Laser interferometer or other optical angular deviation measuring instruments.

Observations and references to ISO 230-1:2012, 3.4.16 and 8.4

The level or instrument shall be placed on the table:

a) E_{AR} (pitch) in the Z-axis direction (with optical instruments set vertically);

b) E_{CR} (roll) in the X-axis direction;

c) E_{BR} (yaw) in the Z-axis direction (with optical instruments set horizontally).

The reference level shall be located on the ram and the ram shall be in the middle of the travel range.

When R'-axis motion causes an angular movement of both spindle head and work holding table, differential measurements of the two angular movements shall be made and this shall be stated.

STANDARDSISO.COM : Click to view the full PDF of ISO 3070-2:2016

Object	**G23**
Checking of parallelism between the table slide movement (R'-axis) and the ram movement (Z-axis): a) in the vertical YZ-plane, $E_{A(0Z)R}$; b) in the horizontal ZX-plane, $E_{B(0Z)R}$.	

Diagram

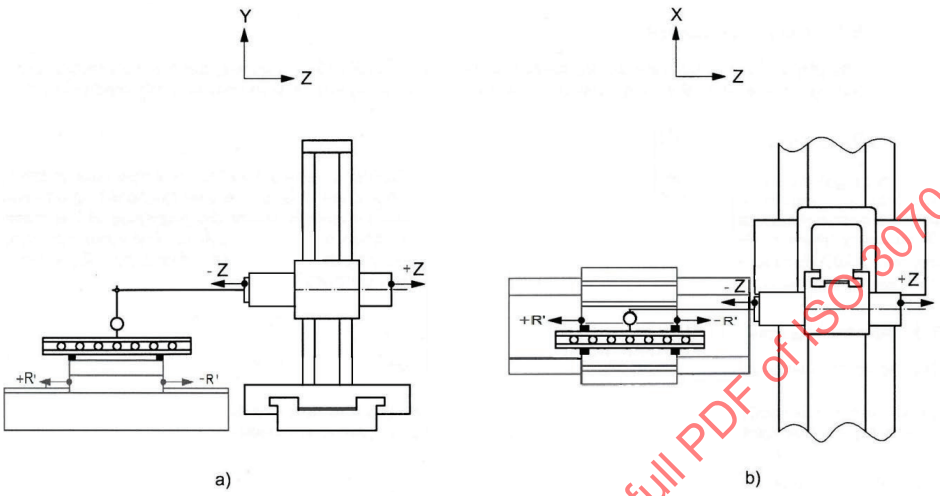

Tolerance	**Measured deviations**
a) and b) 0,03/500	a) b)

Measuring instruments

Straightedge, dial gauge and adjustable blocks.

Observations and references to ISO 230-1:2012, 10.1.2

Set a straightedge on the table, vertical for a) and horizontal for b), parallel to the ram movement (Z-axis) or the lack of parallelism shall be considered in the measurement.

If the spindle can be locked, the dial gauge may be mounted on it. If the spindle cannot be locked, the dial gauge shall be placed on the ram face.

Apply the stylus of the dial gauge to the straightedge, measuring in the Y-direction for a) and in the X-direction for b). Retract the ram and zero the dial gauge.

Move the R'-axis to the required position and record the dial gauge reading. The measured parallelism error, $E_{A(0Z)R}$, for a) or $E_{B(0Z)R}$, for b), is the ratio between the reading and the travelled distance along the R'-axis.

NOTE These tests can also be performed with single point measurements (synchronous movements of Z-axis and R'-axis)

STANDARDSISO.COM : Click to view the full PDF of ISO 3070-2:2016

© ISO 2016 – All rights reserved

Object	**G24**
Checking of squareness between) the table slide movement (R'-axis) and the spindle head movement (Y-axis), $E_{A(0R)Y}$.	
Diagram	
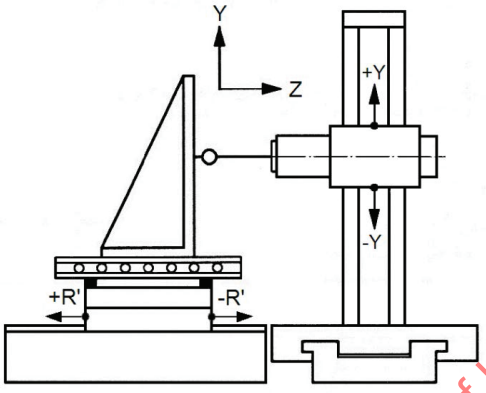	
Tolerance 0,04/1 000	**Measured deviations**
Measuring instruments Square, straightedge, adjustable blocks and dial gauge.	
Observations and references to ISO 230-1:2012, 10.3.2 Set a straightedge on the table parallel to the table slide movement (R'-axis) using adjustable blocks or the lack of parallelism shall be considered in the measurement. Place a square on the straightedge. If the spindle can be locked, the dial gauge may be mounted on it. If the spindle cannot be locked, the dial gauge shall be placed on the ram face. Apply the stylus of the dial gauge to the square, measuring in the Z-direction. Position the Y-axis to measure close to one end of the square surface and zero the dial gauge. Move the Y-axis to measure close to the other end of the square surface and note the reading. The measured squareness error, $E_{A(0Y)R}$, is the ratio between the reading and the travelled distance along the Y-axis.	

STANDARDSISO.COM : Click to view the full PDF of ISO 3070-2:2016

© ISO 2016 – All rights reserved

Object	**G25**
Checking of squareness between the table slide movement (R'-axis) and the column movement (X-axis), $E_{B(0X)R}$.	
Diagram	

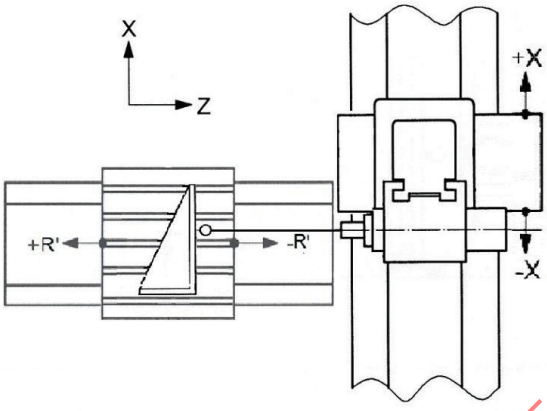

Tolerance	**Measured deviation**
0,04/1 000	

Measuring instruments

Square and dial gauge

Observations and references to ISO 230-1:2012, 10.3.2

Set a square on the table and align one side parallel to the column movement (X-axis) or the lack of parallelism shall be considered in the measurement.

If the spindle can be locked, the dial gauge may be mounted on it. If the spindle cannot be locked, the dial gauge shall be placed on the ram face.

Apply the stylus of the dial gauge to the square, measuring in the X-axis direction. Position the R'-axis to measure close to one end of the square surface and zero the dial gauge.

Move the R'-axis to measure close to the other end of the square surface and note the reading. The measured squareness error, $E_{B(0X)R}$, is the ratio between the reading and the travelled distance along the R'-axis.

STANDARDSISO.COM : Click to view the full PDF of ISO 3070-2:2016

© ISO 2016 – All rights reserved

Object	**G26**
Checking of parallelism error between the B'-axis of rotation of the table and the Y-axis motion: a) $E_{A(0Y)B}$ in the vertical YZ plane; b) $E_{C(0Y)B}$ in the vertical XY plane.	

Diagram

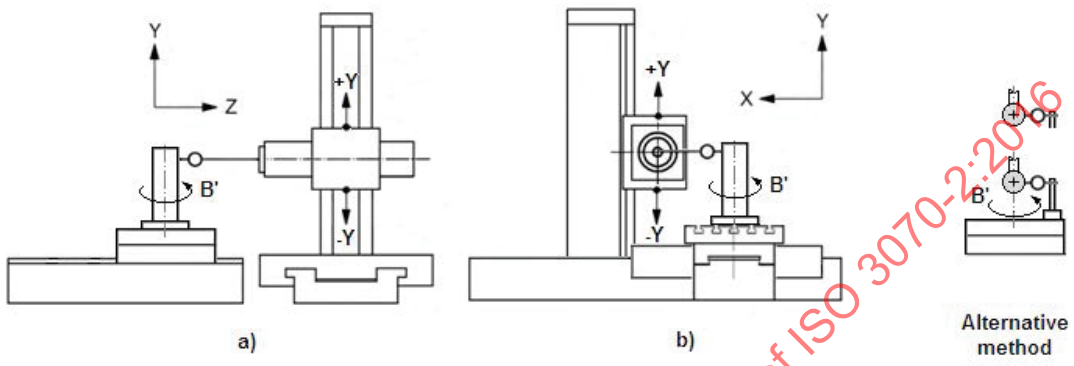

Tolerance	**Measured deviations**
0,04/1 000	a) b)

Measuring instruments

Cylinder square with flange base and dial gauge

Observations and references to ISO 230-1:2012, 3.6.4, 10.1.4, 10.1.4.3, or 10.1.4.4 as alternative

If the spindle can be locked, the dial gauge may be mounted on it. If the spindle cannot be locked, the dial gauge shall be mounted on the spindle head.

a) Z-axis to be locked, if possible.

b) X-axis to be locked, if possible.

1) Fix a cylinder square with a flange base on the table and centre it approximately on the axis of rotation.

2) Fix the dial gauge with the stylus oriented in the Z-axis direction for a) and X-axis direction for b).

3) Touch the cylinder square by the stylus, close to the cylinder bottom, and find the maximum reading by making small movements along the X-axis for a) and along Z-axis for b). Zero the dial gauge.

4) Move the head away from the table along the Y-axis and touch the cylinder close to its top again. Note the Y-axis travel length. Find the maximum reading by making small movements along the X-axis for a) and along Z-axis for b) and note the new reading.

5) Turn the table by 180° and repeat steps 3) and 4).

6) For both measurements a) and b), the average value (half the algebraic sum) of the two readings on top of the cylinder, divided by the Y-axis travel length, is the deviation to be reported.

Alternative method

A test sphere shall be mounted on the spindle head of the machine and the linear displacement sensor shall be mounted on the table. The test sphere shall be centred with respect to the B'-axis average line by moving X-axis and Z-axis, while rotating the B'-axis. The Y-axis shall then be moved to another location. The displacement sensor is re-positioned to read against the test sphere at this new location. The error in the centre position shall be recorded as half the difference of the readings of the displacement sensor at opposite points on the sphere. This alternative method can be used when it is possible to touch a complete horizontal circumference of the sphere (e.g. the sphere equator).

The orientation of the parallelism deviation between the B'-axis and the Y-axis, in both planes, shall be noted.

STANDARDSISO.COM : Click to view the full PDF of ISO 3070-2:2016

Object	**G27**
Checking of parallelism between the median or reference T-slot, in the rotary position B0, and the table slide movement (R'-axis).	
Diagram	

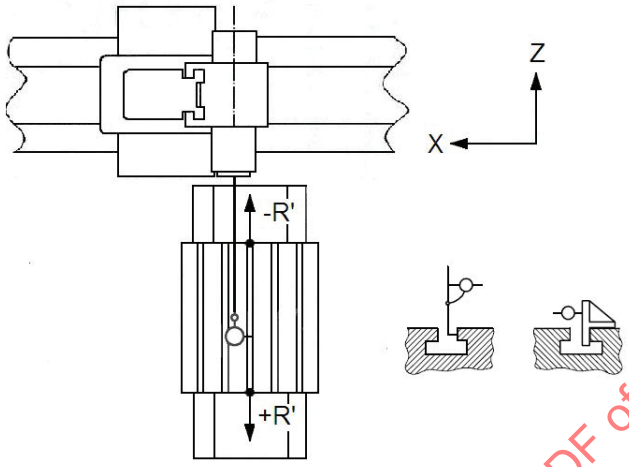

Tolerance	**Measured deviation**
0,03 for any measuring length of 1 000	

Measuring instruments

Dial gauge and cross-square

Observations and references to ISO 230-1:2012, 12.3.2.5.1

If the spindle can be locked, the dial gauge may be mounted on it. If the spindle cannot be locked, the dial gauge shall be mounted on the ram face.

The stylus of the dial gauge may touch the reference face of T-slot directly or by using a cross-square.

Traverse the R'-axis from one measurement position to the following without contact between the stylus and the reference surface. At each measurement position, either move down the Y-axis to bring the dial gauge into contact with the reference surface or insert the cross-square between the stylus and the table surface.

The parallelism error is the difference between the maximum and the minimum reading.

STANDARDSISO.COM : Click to view the full PDF of ISO 3070-2:2016

© ISO 2016 – All rights reserved

7.7 Indexing or rotary tables

Object | **G28**

Checking of face run-out of the table surface in its rotating movement.

Diagram

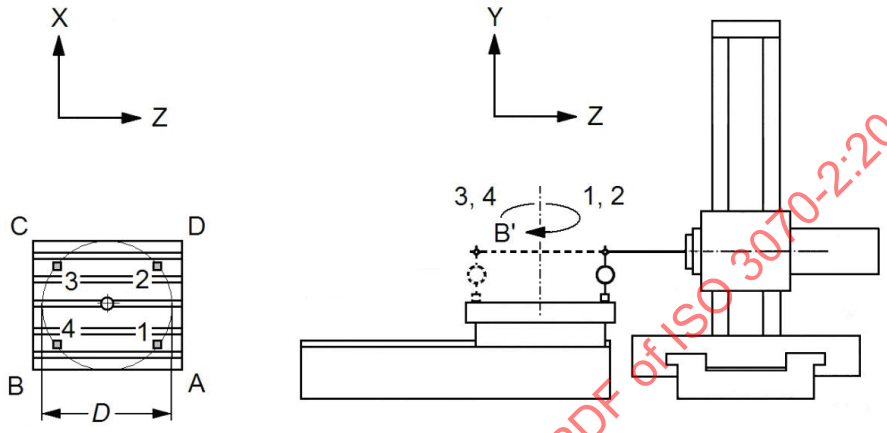

Key

D	measuring diameter
1, 2, 3 and 4	measurement positions
A, B, C and D	table corners

Tolerance

	for a measuring diameter, *D*, up to:			
	2 000	3 000	4 000	5 000
tolerance:	0,04	0,06	0,08	0,10

For measuring diameters, *D*, over 5 000, the tolerance shall be agreed upon between manufacturer/supplier and user.

Measured deviation

Measuring instruments

Dial gauge and gauge block

Observations and references to ISO 230-1:2012, 12.5

With the dial gauge in position 1, place a gauge block toward the corner A of the table and take the measurement. Take off the gauge block and rotate the table to B90 and take the measurement by inserting the same gauge block (toward corner B). Carry out the same operation toward the corners C and D by positioning the table to B180 and B270.

Repeat the test reversing the B'-axis rotation direction (from D to A). Record the difference between the maximum and minimum readings.

Repeat the same process, placing the dial gauge in the successive positions of 2, 3 and 4 or at least in position 2.

Use the greatest of the recorded differences as the value of face run-out.

Lock the table each time before taking measurements, if applicable.

STANDARDSISO.COM : Click to view the full PDF of ISO 3070-2:2016

Object	**G29**
Checking of run-out of the centring hole of the table in its rotating movement.	
Diagram	

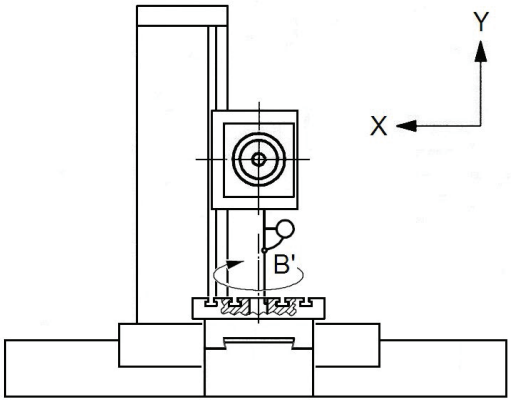

Tolerance	**Measured deviation**
0,015	

Measuring instruments

Dial gauge (lever type)

Observations and references to ISO 230-1:2012, 12.5

If the spindle can be locked, the dial gauge may be mounted on it. If the spindle cannot be locked, the dial gauge shall be mounted on the ram face.

Set the stylus of the dial gauge in the same plane with the axis of the centring hole and as near as possible to the table surface.

Rotate the table and record the difference between the maximum and the minimum reading.

STANDARDSISO.COM : Click to view the full PDF of ISO 3070-2:2016

© ISO 2016 – All rights reserved

Object	**G30**
Checking of accuracy of the table angular positions at 0°, 90°, 180° and 270°. a) for rotary indexable table with only four fixed positions 90° apart. b) for rotary indexable table with any number of fixed positions.	
Diagram	
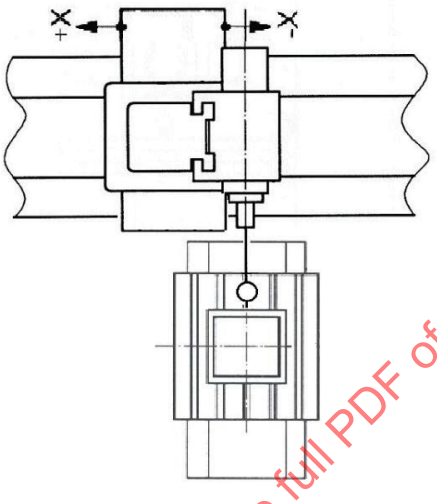	
Tolerance a) 0,06/1 000 b) 0,05/1 000	**Measured deviation** a) b)
Measuring instruments Square and dial gauge or optical methods	
Observations and references to ISO 230-1:2012, 9.2 For both a) and b): Set a square on the table with one edge parallel to the column movement (X-axis). Index the table four times in one direction (90°, 180°, 270°and 360°) and check in every position the parallelism (slope) between column movement and the corresponding edge of the square. Index the table four times in opposite direction (270°, 180°, 90° and 0°) and check again the parallelism (slope) in every position. The maximum difference of the eight readings is the measured deviation. NOTE Tests for checking of accuracy and repeatability of angular positioning of rotary table by numerical control (B'-axis), E_{BB} are specified in P6.	

STANDARDSISO.COM : Click to view the full PDF of ISO 3070-2:2016

8 Checking accuracy and repeatability of positioning by numerical control

These tests are applied only to horizontal boring and milling machines, numerically controlled for linear and rotary positioning axes.

In performing the tests, reference should be made to ISO 230-2, especially for the environmental conditions, warming up of the machine, measuring methods, evaluation and interpretation of the results.

NOTE For editorial reasons, within this Clause, the symbol $\bar{B}$ for the mean bi-directional positioning error of an axis has been adapted to the subscript Bmean (e.g. $E_{XX,Bmean}$ is the symbol for the mean bi-directional positioning error of the X-axis).

© ISO 2016 – All rights reserved

Object					**P1**
Checking of accuracy and repeatability of positioning of the column movement (X-axis) by numerical control, E_{XX}.					
Diagram 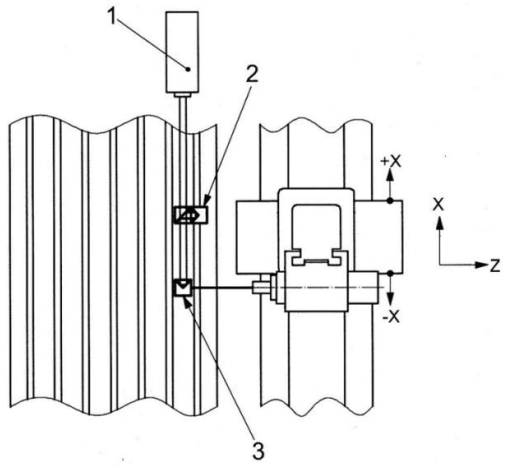 **Key** 1 laser head 2 interferometer 3 reflector					
Tolerance		**Measured length**			**Measured deviation**
		≤500	≤1 000	≤2 000	
Axes up to 2 000					
Bi-directional positioning accuracy of X-axis[a]	$E_{XX,A}$	0,014	0,020	0,022	
Unidirectional positioning repeatability of X-axis[a]	$E_{XX,R\uparrow}$;$E_{XX,R\downarrow}$	0,007	0,009	0,011	
Bi-directional positioning repeatability of X-axis	$E_{XX,R}$	0,011	0,014	0,017	
Mean reversal value of X-axis	$E_{XX,Bmean}$	0,005	0,006	0,008	
Bi-directional systematic positioning error of X-axis[a]	$E_{XX,E}$	0,008	0,011	0,013	
Mean bi-directional positioning error of X-axis[a]	$E_{XX,M}$	0,003	0,005	0,006	
Axes exceeding 2 000					
One or more segments of 2 000 with five runs upwards and downwards each. For axes up to 4 000 one full measurement over one 2 000 mm segment is recommended, for axes over 4 000 and up to 8 000 two 2 000 mm segments are recommended, and so forth. Test segments shall be equally spaced along the full axis length, with any excess length equally divided at the beginning, in between, and at the end of the test segments.					
Bidirectional systematic positioning error of X-axis[a]	$E_{XX,E}$	0,016 + 0,006 for each additional 1 000			
Mean bi-directional positioning error of X-axis[a]	$E_{XX,M}$	0,008 + 0,003 for each additional 1 000			
[a] May provide a basis for machine acceptance.					
Measuring instruments Laser measurement equipment or linear scale					
Observations and references to ISO 230-2:2014, Clause 3, 5.3.2 and 5.3.3 The linear scale or the beam of laser measurement equipment shall be set parallel to the travelling axis. Positioning feed speed shall be agreed between manufacturer/supplier and user. The position of the starting point of measurement shall be stated. Number and position of 2 000 test segment(s) shall be stated in the test report.					

STANDARDSISO.COM : Click to view the full PDF of ISO 3070-2:2016

© ISO 2016 – All rights reserved

Object | **P2**

Checking of accuracy and repeatability of positioning of the spindle head movement (Y-axis) by numerical control, E_{YY}.

Diagram

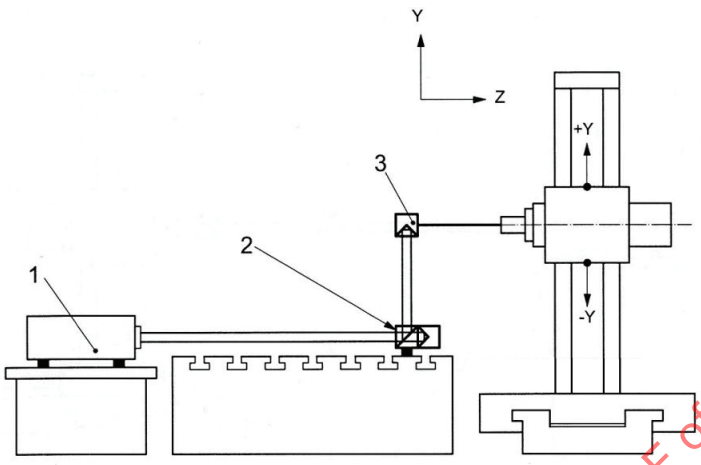

Key
1 laser head
2 interferometer
3 reflector

Tolerance		Measured length ≤500	Measured length ≤1 000	Measured length ≤2 000	Measured deviation
Axes up to 2 000					
Bi-directional positioning accuracy of Y-axis[a]	$E_{YY,A}$	0,014	0,020	0,022	
Unidirectional positioning repeatability of Y-axis[a]	$E_{YY,R\uparrow}$; $E_{YY,R\downarrow}$	0,007	0,009	0,011	
Bi-directional positioning repeatability of Y-axis	$E_{YY,R}$	0,011	0,014	0,017	
Mean reversal value of Y-axis	$E_{YY,Bmean}$	0,005	0,006	0,008	
Bi-directional systematic positioning error of Y-axis[a]	$E_{YY,E}$	0,008	0,011	0,013	
Mean bi-directional positioning error of Y-axis[a]	$E_{YY,M}$	0,003	0,005	0,006	
Axes exceeding 2 000					
One or more segments of 2 000 with five runs upwards and downwards each. For axes up to 4 000, one full measurement over one 2 000 mm segment is recommended, for axes over 4 000 and up to 8 000, two 2 000 mm segments are recommended and so forth. Test segments shall be equally spaced along the full axis length, with any excess length equally divided at the beginning, in between, and at the end of the test segments.					
Bidirectional systematic positioning error of Y-axis[a]	$E_{YY,E}$	0,016 + 0,006 for each additional 1 000			
Mean bi-directional positioning error of Y-axis[a]	$E_{YY,M}$	0,008 + 0,003 for each additional 1 000			

[a] May provide a basis for machine acceptance.

Measuring instruments

Laser measurement equipment or linear scale

Observations and references to ISO 230-2:2014, Clause 3, 5.3.2 and 5.3.3

The linear scale or the beam of the laser measurement equipment shall be set parallel to the travelling axis.

Positioning feed speed shall be agreed between manufacturer/supplier and user.

The position of the starting point of measurement shall be stated.

Number and position of 2 000 test segment(s) shall be stated in the test report.

STANDARDSISO.COM : Click to view the full PDF of ISO 3070-2:2016

© ISO 2016 – All rights reserved

Object | **P3**

Checking of accuracy and repeatability of positioning of the ram movement (Z-axis) by numerical control, E_{ZZ}.

Diagram

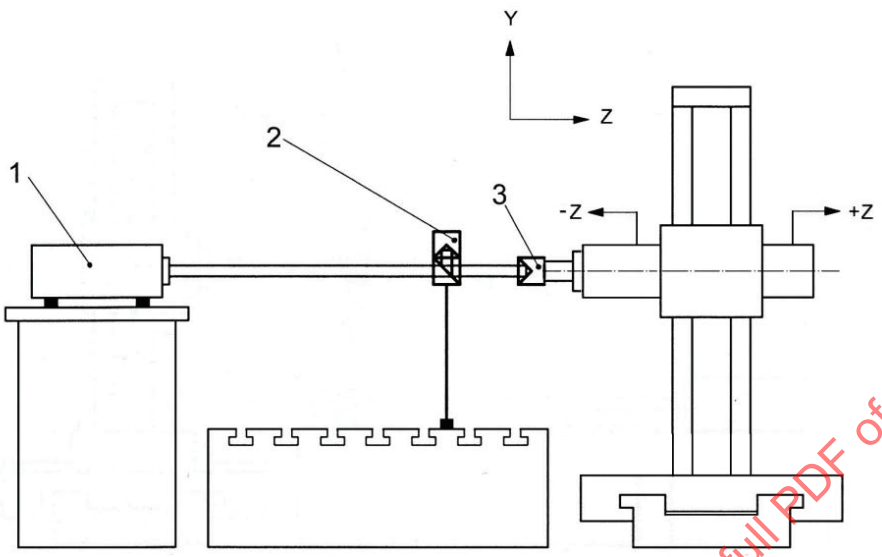

Key
1 laser head
2 interferometer
3 reflector

Tolerance		Measured length			Measured deviation
		≤500	≤1 000	≤2 000	
Bi-directional positioning accuracy of Z-axis[a]	$E_{ZZ,A}$	0,014	0,020	0,022	
Unidirectional positioning repeatability of Z-axis[a]	$E_{ZZ,R\uparrow}$;$E_{ZZ,R\downarrow}$	0,007	0,009	0,011	
Bi-directional positioning repeatability of Z-axis	$E_{ZZ,R}$	0,011	0,014	0,017	
Mean reversal value of Z-axis	$E_{ZZ,Bmean}$	0,005	0,006	0,008	
Bi-directional systematic positioning error of Z-axis[a]	$E_{ZZ,E}$	0,008	0,011	0,013	
Mean bi-directional positioning error of Z-axis[a]	$E_{ZZ,M}$	0,003	0,005	0,006	

[a] May provide a basis for machine acceptance.

Measuring instruments

Laser measurement equipment or linear scale

Observations and references to ISO 230-2:2014, Clause 3, 5.3.2 and 5.3.3

The linear scale or the beam of the laser measurement equipment shall be set parallel to the travelling axis.

Positioning feed speed shall be agreed between manufacturer/supplier and user.

The position of the starting point of measurement shall be stated.

Number and position of 2 000 test segment(s) shall be stated in the test report.

STANDARDSISO.COM : Click to view the full PDF of ISO 3070-2:2016

© ISO 2016 – All rights reserved

Object | **P4**

Checking of accuracy and repeatability of positioning of the sliding boring spindle movement (W-axis) by numerical control, E_{ZW}.

Diagram

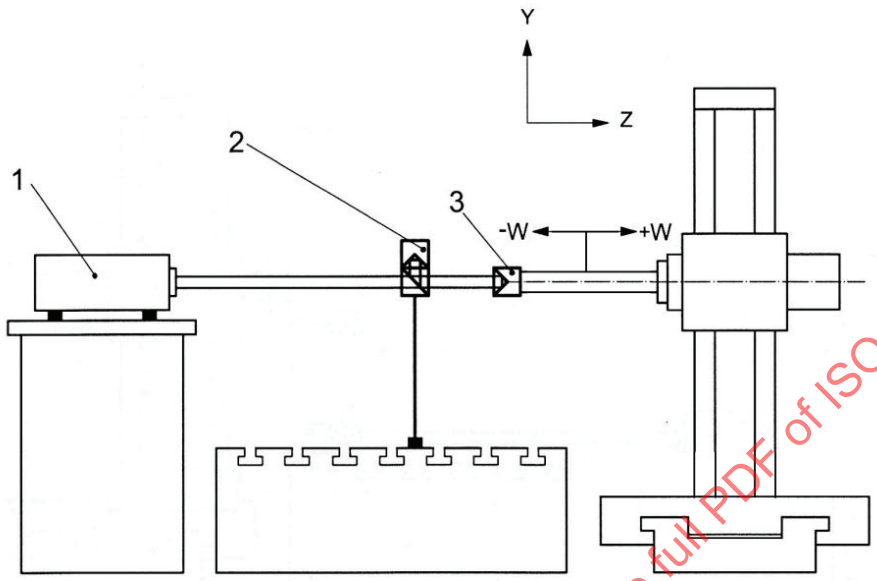

Key
1 laser head
2 interferometer
3 reflector

Tolerance		Measured length		Measured deviation
		≤500	≤1 000	
Bi-directional positioning accuracy of W-axis[a]	$E_{ZW,A}$	0,017	0,022	
Unidirectional positioning repeatability of W-axis[a]	$E_{ZW,R\uparrow}$; $E_{ZW,R\downarrow}$	0,007	0,011	
Bi-directional positioning repeatability of W-axis	$E_{ZW,R}$	0,014	0,017	
Mean reversal value of W-axis	$E_{ZW,Bmean}$	0,006	0,008	
Bi-directional systematic positioning error of W-axis[a]	$E_{ZW,E}$	0,010	0,012	
Mean bi-directional positioning error of W-axis[a]	$E_{ZW,M}$	0,004	0,005	

[a] May provide a basis for machine acceptance.

Measuring instruments

Laser measurement equipment or linear scale

Observations and references to ISO 230-2:2014, Clause 3, **5.3.2 and 5.3.3**

The linear scale or the beam of the laser measurement equipment shall be set parallel to the travelling axis.

Positioning feed speed shall be agreed between manufacturer/supplier and user.

The position of the starting point of measurement shall be stated.

STANDARDSISO.COM : Click to view the full PDF of ISO 3070-2:2016

Object	**P5**
Checking of accuracy and repeatability of positioning of the table slide movement (R'-axis) by numerical control, E_{ZR}.	

Diagram

Key
1 laser head
2 interferometer
3 reflector

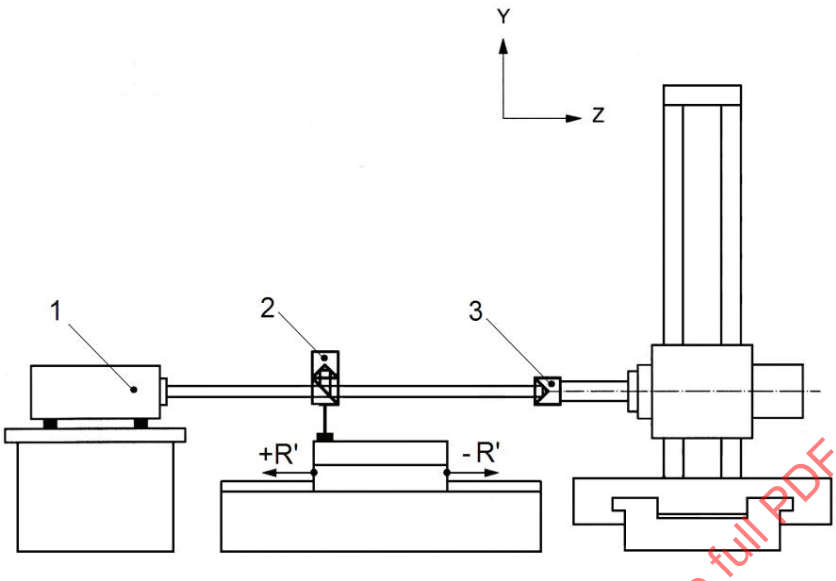

Tolerance		Measured length			Measured deviation
		≤500	≤1 000	≤2 000	
Bi-directional positioning accuracy of R-axis[a]	$E_{ZR,A}$	0,014	0,020	0,022	
Unidirectional positioning repeatability of R-axis[a]	$E_{ZR,R\uparrow}$;$E_{ZR,R\downarrow}$	0,007	0,009	0,011	
Bi-directional positioning repeatability of R-axis	$E_{ZR,R}$	0,011	0,014	0,017	
Mean reversal value of R-axis	$E_{ZR,Bmean}$	0,005	0,006	0,008	
Bi-directional systematic positioning error of R-axis[a]	$E_{ZR,E}$	0,008	0,011	0,013	
Mean bi-directional positioning error of R-axis[a]	$E_{ZR,M}$	0,003	0,005	0,006	

[a] May provide a basis for machine acceptance.

Measuring instruments

Laser measurement equipment or linear scale

Observations and references to ISO 230-2:2014, Clause 3, 5.3.2 and 5.3.3

The linear scale or the beam of the laser measurement equipment shall be set parallel to the travelling axis.

Positioning feed speed shall be agreed between manufacturer/supplier and user.

The position of the starting point of measurement shall be stated.

STANDARDSISO.COM : Click to view the full PDF of ISO 3070-2:2016

© ISO 2016 – All rights reserved