INTERNATIONAL STANDARD

ISO 3800

First edition
1993-12-15

Threaded fasteners — Axial load fatigue testing — Test methods and evaluation of results

Éléments de fixation filetés — Essais de fatigue sous charge axiale — Méthode d'essai et évaluation des résultats

STANDARDSISO.COM : Click to view the full PDF of ISO 3800:1993

Reference number
ISO 3800:1993(E)

Foreword

ISO (the International Organization for Standardization) is a worldwide federation of national standards bodies (ISO member bodies). The work of preparing International Standards is normally carried out through ISO technical committees. Each member body interested in a subject for which a technical committee has been established has the right to be represented on that committee. International organizations, governmental and non-governmental, in liaison with ISO, also take part in the work. ISO collaborates closely with the International Electrotechnical Commission (IEC) on all matters of electrotechnical standardization.

Draft International Standards adopted by the technical committees are circulated to the member bodies for voting. Publication as an International Standard requires approval by at least 75 % of the member bodies casting a vote.

International Standard ISO 3800 was prepared by Technical Committee ISO/TC 2, *Fasteners*, Subcommittee SC 1, *Mechanical properties of fasteners*.

This first edition of ISO 3800 cancels and replaces ISO 3800-1:1977, which has been technically revised.

STANDARDSISO.COM : Click to view the full PDF of ISO 3800:1993

© ISO 1993
All rights reserved. Unless otherwise specified, no part of this publication may be reproduced or utilized in any form or by any means, electronic or mechanical, including photocopying and microfilm, without permission in writing from the publisher.

International Organization for Standardization
Case Postale 56 • CH-1211 Genève 20 • Switzerland

Printed in Switzerland

Threaded fasteners — Axial load fatigue testing — Test methods and evaluation of results

STANDARDSISO.COM : Click to view the full PDF of ISO 3800:1993

1 Scope

This International Standard specifies the conditions for carrying out axial load fatigue tests on threaded fasteners, as well as recommendations for the evaluation of the results.

Unless otherwise agreed, the tests are of the fluctuating tension type and are carried out at room temperature, the loading applied being centric along the longitudinal axis of the fastener. The influence of the compliance of clamped parts on the strain of the fastener is not taken into account.

This method allows determination of the fatigue strength of threaded fasteners.

The test results can be influenced by the test conditions. For this reason, minimum requirements are specified to reduce this effect. In addition, calibration and centring control methods for the testing apparatus are included.

2 Normative references

The following standards contain provisions which, through reference in this text, constitute provisions of this International Standard. At the time of publication, the editions indicated were valid. All standards are subject to revision, and parties to agreements based on this International Standard are encouraged to investigate the possibility of applying the most recent editions of the standards indicated below. Members of IEC and ISO maintain registers of currently valid International Standards.

ISO 273:1979, *Fasteners — Clearance holes for bolts and screws.*

ISO 554:1976, *Standard atmospheres for conditioning and/or testing — Specifications.*

ISO 885:1976, *General purpose bolts and screws — Metric series — Radii under the head.*

ISO 4032:1986, *Hexagon nuts, style 1 — Product grades A and B.*

ISO 4033:1979, *Hexagon nuts, style 2 — Product grades A and B.*

ISO 8673:1988, *Hexagon nuts, style 1, with metric fine pitch thread — Product grades A and B.*

ISO 8674:1988, *Hexagon nuts, style 2, with metric fine pitch thread — Product grades A and B.*

3 Symbols and their designations

See table 1.

Table 1 — Symbols and their designations

Symbol	Designation
A_{d3}	Area at nominal minor diameter, $A_{d3} = \pi d_3^2/4$
A_s	Stress area $A_s = \frac{\pi}{4}\left(\frac{d_2 + d_3}{2}\right)^2$ Area to be used in calculations of mean stress and stress amplitude. By agreement between the user and supplier, A_{d3} may be used.
d	Nominal size of the thread of the load verification stud
d_1	Basic minor diameter of the thread
d_2	Basic pitch diameter of the thread
d_3	Nominal minor diameter of the thread, $d_3 = d_1 - \frac{H}{6}$
d_a	Diameter at the point of tangency of the fillet
d_h	Clearance hole diameter
d_s	Shank diameter of the load verification stud
D	Nominal thread diameter of the threaded test adaptor
F	Tensile load
$F_{0,2}$	Tensile load at proof stress $R_{p0,2}$
F_a	Load amplitude
ΔF_{aII}	Difference of load amplitudes in the transition range
F_A	Load amplitude at endurance fatigue limit
F_m	Mean load
H	Height of the fundamental triangle of the thread
N	Number of stress cycles
N_G	The number of stress cycles in the case where the test has discontinued without failure
p	Failure probability
p_f	Failure probability in the finite life range
p_t	Failure probability in the transition range
P	Pitch of the thread
$R_{m,min}$	Minimum tensile strength
R_s	Constant stress ratio $\sigma_{min}/\sigma_{max}$
s	Width across flats of hexagons
$S(F_A)$	Standard deviation of the fatigue load
$S(\sigma_A)$	Standard deviation of the fatigue strength
$S(\log N)$	Standard deviation of logarithm of the fatigue life
α, β	Coefficients of regression line for the inclined part of S/N curve
σ_a	Stress amplitude
σ_A	Stress amplitude at endurance fatigue limit
σ_{ax}	Axial tensile stress
σ_b	Bending stress
σ_m	Mean stress
σ_{min}	Minimum stress
σ_{max}	Maximum stress
σ_{Min}	Minimum stress at endurance fatigue limit
σ_{Max}	Maximum stress at endurance fatigue limit
σ_{AN}	Fatigue strength at N cycles
σ_{AA}	Estimated value of finite life strength at $N = 5 \times 10^4$
σ_{AB}	Estimated value of finite life strength at $N = 1 \times 10^6$
$\sigma_{a,i}$	Stress amplitude of the ith test in the finite life range
$\sigma_{a,j}$	Stress amplitude of the jth test by staircase method
$\Delta\sigma_{aI}$	Interval of stress amplitude of the test at the finite life range (inclined part of S/N curve)
$\Delta\sigma_{aII}$	Difference in levels of stress amplitude in the transition range

NOTES

1 The symbol ^ is used in the case of estimated values. For example, the estimated value $\hat{\sigma}_{AN}$ of the fatigue strength at the number of cycles N.

2 The symbol — is used in the case of σ_a or $\log N$ values which are derived from the regression line; e.g. $\overline{\sigma_a}$ or $\overline{\log N}$.

4 Principle

Test are made on threaded fasteners to determine fatigue properties such as those shown by the Wöhler curve (S/N curve).

Threaded fasteners to be tested are mounted in an axial load fatigue testing machine and subjected to fluctuating tension type loading.

Tests with constant mean stress σ_m or constant stress ratio $R_s = \sigma_{min}/\sigma_{max}$ may be used. Constant mean stress is used generally to determine infinite life [see case (c) in figure 10].

Constant stress ratio is generally for quality acceptance testing [see case (a) in figure 10].

STANDARDSISO.COM : Click to view the full PDF of ISO 3800:1993

The test is continued until the test piece fails, or until a predetermined number of stress cycles has been exceeded. Generally the number of test cycles is determined by the material or by the endurance fatigue strength of the test specimen. Unless otherwise specified, the definition of failure is complete separation of the fastener into two parts.

5 Apparatus

5.1 Testing machine

The testing machine shall be capable of maintaining automatically the loads to within ± 2 % of the required values throughout the test and shall be equipped with a device for counting and recording the total number of cycles per test. The testing machine shall be calibrated periodically to ensure this accuracy. The frequency range of testing shall be between 4,2 Hz and 250 Hz. The testing machine shall induce a sinusoidal fluctuation in load in the test piece.

The testing machine shall have a device to prevent its automatic restarting after stopping due to electrical power service interruption.

5.2 Test fixtures

The test fixtures shall be capable of transmitting an axial load to the test piece. Figures 1 and 2 give basic requirements. Self-aligning devices are not recommended, see 5.3.

STANDARDSISO.COM : Click to view the full PDF of ISO 3800:1993

Perpendicularity and concentricity tolerances in millimetres, surface roughness in micrometres

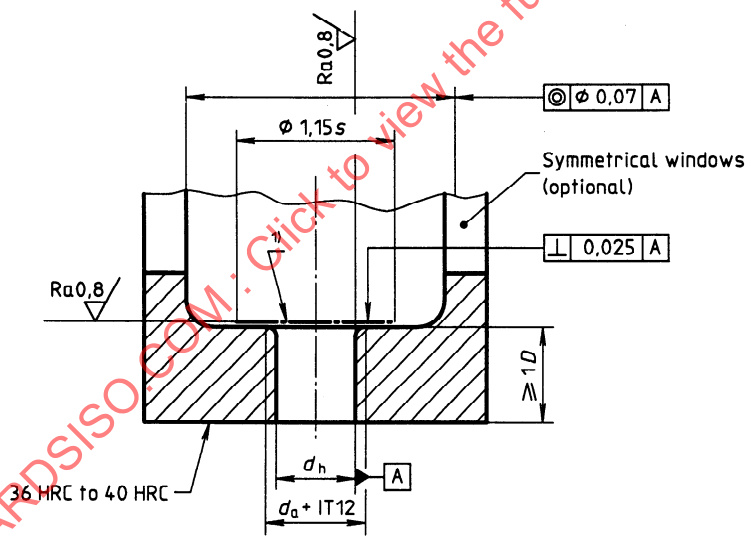

d_h is in accordance with ISO 273, fine series.
d_a is in accordance with ISO 885, finished products.

1) Surface may be case-hardened 0,25 mm to 0,5 mm deep: maximum hardness, HRC 60; minimum hardness, 5 points HRC greater than that of the test part.

Figure 1 — Fixture without insert

Perpendicularity and concentricity tolerances in millimetres, surface roughness in micrometres

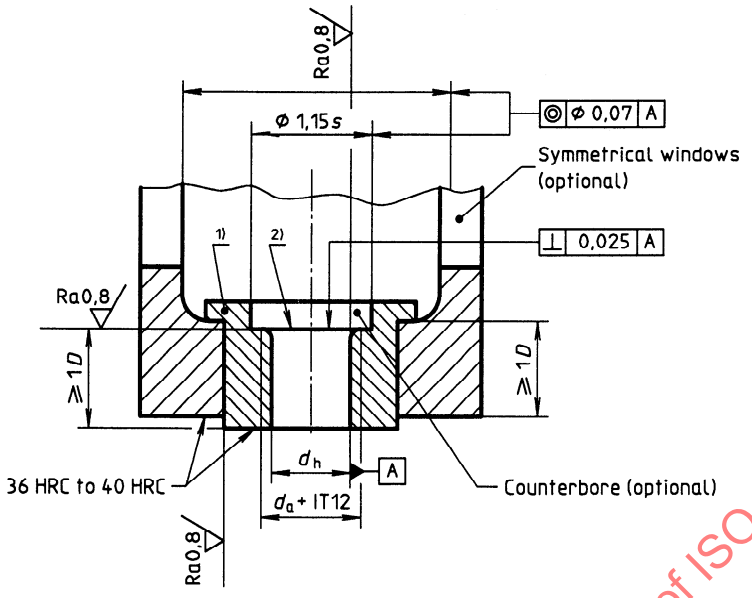

d_h is in accordance with ISO 273, fine series.
d_a is in accordance with ISO 885, finished products.

1) The use of an insert shall not affect the rigidity of the test fixture.
2) Surface may be case-hardned 0,25 mm to 0,5 mm deep: maximum hardness, HRC 60; minimum hardness, 5 points HRC greater than that of the test part.

Figure 2 — Fixture with insert

STANDARDSISO.COM : Click to view the full PDF of ISO 3800:1993

5.3 Test alignment

Periodically, the alignment of the test set-up shall be verified. This shall be determined by using a load verification stud (see figure 3) with four strain gauges located at 90° on a common centreline around the axis. The length of the parallel part of the load verification stud shall be four times its diameter. When measured at 50 % of the load range used on the machine, the difference between the maximum stress $\sigma_{ax} + \sigma_b$ and the nominal tensile stress σ_{ax} shall not exceed 6 % of the nominal tensile stress (see figure 4).

Self-aligning devices are not recommended. If they are used, alignment shall be checked carefully since any excentric loading may cause fatigue test results to vary widely.

5.4 Internally threaded component

For fatigue testing of standard products, the appropriate size and property class of nut in accordance with ISO 4032, ISO 4033, ISO 8673 or ISO 8674 or a threaded adapter shall be used.

If special bolt-nut combinations are tested, a precise description of the nut shall be given as specified in 8.2.

If threaded adapters according to figure 5 are used, they shall be described in accordance with 8.2.

Cylindricity, perpendicularity and concentricity tolerances in millimetres, surface roughness in micrometres

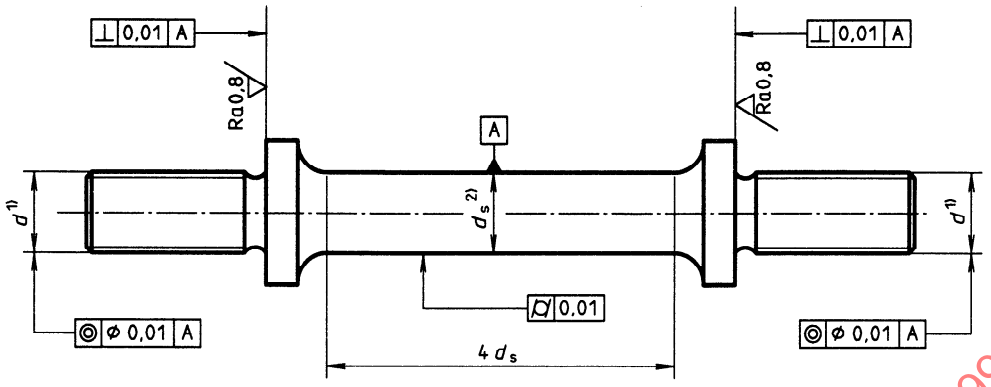

1) The tolerance class of the screw thread shall be 4h.
2) $d_s = d$

Figure 3 — Load verification stud

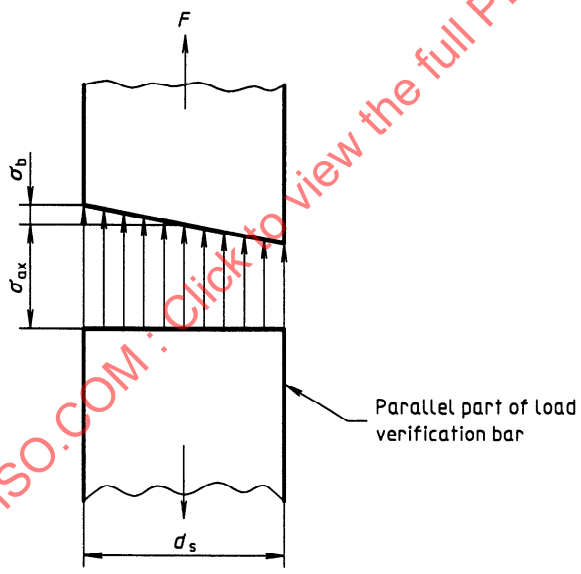

$$\sigma_{ax} = \frac{4F}{\pi d^2}$$

$$\frac{\sigma_b}{\sigma_{ax}} \leqslant 0{,}06$$

Figure 4 — Stress distribution in the shank of the load verification stud

STANDARDSISO.COM : Click to view the full PDF of ISO 3800:1993

Flatness, perpendicularity and concentricity tolerances in millimetres

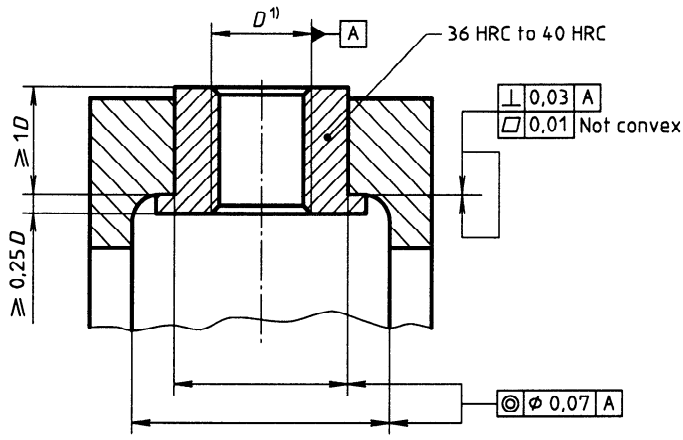

1) Thread tolerance 6H.

Figure 5 — Threaded test adapter

5.5 Test washers

A chamfered test washer may be used under the bolt head to provide clearance for the head-to-shank fillet, or the fixtures may be chamfered. The maximum diameter of the 45° included angle chamfer shall be equal to the diameter at the point of tangency of the fillet (d_a) with a + IT12 tolerance (see figure 6). The faces of washers shall be parallel to within 0,01 mm. The hardness of the washer shall be the same as that of the fixture.

Where a test washer is used, it shall be indicated in the test report (see 8.3).

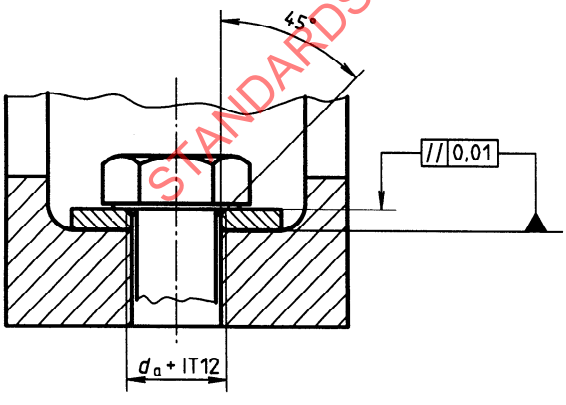

Figure 6 — Test washer (assembled)

6 Test procedure

The capacity of the testing machine shall be selected so that the maximum load on the test specimen is equal to or greater than 10 % of the maximum scale capacity of the machine in the test configuration selected. The bearing face of the nut or the face of the threaded adapter shall be located at least four pitches from the unthreaded portion of the shank and the nut threads shall be fully engaged; a bolt length of at least 2*P* shall protrude beyond the test nut (see figure 7). Test nuts shall be used once only.

Threaded test adapters may be used continually as long as they assemble freely on the externally threaded part each time and no damage has been observed.

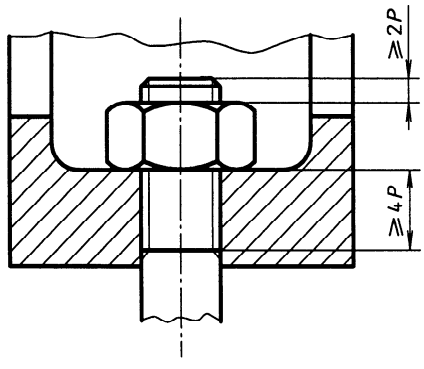

Figure 7 — Location of test nut

STANDARDSISO.COM : Click to view the full PDF of ISO 3800:1993

The specimen shall be assembled freely in the fixture without binding or forcing. No torsional stress shall be induced in the assembly by torquing the nut; i.e. the load shall be induced in the assembly by the testing machine.

The threaded fastener and test nut shall be thoroughly cleaned and then coated with SAE 20 oil or equivalent prior to testing.

The test frequency shall be selected so that the temperature of the test specimen does not rise more than 50 °C during the test period. The temperature should be measured at the first engaged thread.

At frequent intervals throughout the test period, the load shall be monitored to ascertain that the load conditions have not changed.

Results of fatigue tests are affected by atmospheric conditions. Therefore, if possible, atmospheric conditions, particularly humidity, should be checked in accordance with ISO 554:1976, 2.1.

7 Evaluation of results

A comparative assessment of fatigue strength values is only possible when the tests and the evaluation of results are carried out in a uniform manner.

Fatigue strength values can be determined in the finite life range (failure of all test pieces before a predetermined number of stress cycles is reached) and in the transition range where, up to the predetermined number of stress cycles (in general 5×10^6 to 10^7 stress cycles), failures as well as non-failures will occur (see figure 10). As a function of the test objective, the fatigue tests are carried out and evaluated according to two methods:

a) a minimum number of stress cycles is reached at a predetermined stress amplitude in the finite life range and transition range, respectively;

b) the position and size of scatter of the finite life range and transition range, respectively, are determined using statistical evaluation methods.

7.1 Tests in the finite life range

The test in the finite life range is the test for obtaining the finite fatigue life data of threaded fasteners and is generally applied for production control of products, quality assurance at delivery and the like. When the product specification defines the stress and the number of stress cycles and the other conditions are not specified, generally a minimum of six products should be tested.

Furthermore, this test shall be made by using either the method to keep the mean stress (σ_m) constant or the method to keep the ratio (R_s) of the maximum stress and the minimum stress constant ($R_s = 1/10$ is generally used).

7.1.1 Quality control test

A statistically valid sample shall be taken for test purposes as agreed between the user and supplier. The sample should be increased by at least 10 % to allow for unforeseen testing difficulties.

7.1.2 Determination of position and slope of the finite life range (Design test)

The scatter in the number of stress cycles in the finite life range can economically only be approximated using statistical calculation methods.

For assessment of the finite life range, the fatigue tests shall be carried out on at least two stress levels, which should be chosen so that numbers of stress cycles are obtained between 10^4 and 5×10^5.

The number of tests (sampling size) per stress level depends on the selected statistical evaluation method and the required prediction reliability for the probabilities of failure p_f; e.g. $p_f = 10$ %, 50 % or 90 %.

The minimum number of test pieces should not be less than six.

The scatter in the finite life range on one stress level can then be determined by taking as a basis, for example, the normal Gaussian distribution in the Gaussian probability net and by using the estimator

$$p_f = \frac{3i - 1}{3n + 1}$$

where

p_f is the assessed value for the probability of failure in the finite life range;

i is the ordinal number of a test piece;

n is the number of test pieces tested.

The following example explains the procedure:

$n = 8$ bolts are tested with the constant stress amplitude $\sigma_a = 150$ N/mm^2. The stress cycles reached until failure are, in chronological order:

$N = (169, 178, 271, 129, 405, 115, 280, 305) \times 10^3$.

At first the numbers of stress cycles are arranged according to size, and ordinals i are assigned to them.

STANDARDSISO.COM : Click to view the full PDF of ISO 3800:1993

The first test piece with the lowest number of stress cycles receives the ordinal $i = 1$, the nth test piece (with the highest number of stress cycles) the ordinal $i = n = 8$.

This results in the order or evaluation system given in table 2.

Now the numbers of stress cycles belonging to the respective probabilities of failure p_f are plotted in a Gaussian probability net (figure 8) and the individual results are replaced by a compensation line (regression line). The limits N_{10}, N_{50} and N_{90} can be read using this compensation line.

EXAMPLE

$N_{10} = 110 \times 10^3$, $N_{50} = 213 \times 10^3$ and $N_{90} = 415 \times 10^3$ (i.e. 10 % of all test pieces are expected to fail within 110×10^3 stress cycles, 50 % within 213×10^3 stress cycles and 90 % within 415×10^3 stress cycles).

7.2 Tests in the transition range (infinite life range)

7.2.1 Achieving a given number of stress cycles without failure

For checking whether the requirement for a minimum number of stress cycles is satisfied, a minimum of six test pieces shall be tested at the predetermined stress amplitude, unless otherwise agreed between the user and supplier. The sample should be increased by at least 10 % to allow for unforeseen difficulties.

7.2.2 Determination of position and size of the transition range

By analogy with the finite life range, the scatter in the transition range can economically only be approximated using statistical calculation methods.

In practice, two statistical evaluation methods are basically preferred:

a) stepwise changing of the stress amplitude after each individual test (staircase method);

b) changing of the stress amplitude after having tested several bolts at a constant stress level (e.g. boundary method, arc sine method).

These evaluation methods are based on model functions which approximately represent the distribution of the population of the test lot.

Therefore the median σ_{A50} (fatigue strength with 50 % probability of failure) and the limits of the transition range (e.g. σ_{A10}, σ_{A90}) are to be determined.

Experience has shown that about 15 to 20 test pieces are necessary in order to be able to determine the fatigue strength σ_{A50} within a tolerance of ± 5 %.

For the determination of the limits of the transition range, the number of test pieces is clearly higher (e.g. about 20 to 30 test pieces for σ_{A10}).

As to the reliability and accuracy of the values to be obtained, the arc sine, the staircase and boundary methods, which in general are based on the normal Gaussian distribution, are approximately equally good under the same test conditions.

STANDARDSISO.COM : Click to view the full PDF of ISO 3800:1993

Table 2 — Order system for the statistical evaluation of 8 fatigue tests with a stress amplitude of σ_a = 150 N/mm² in the finite life range

Ordinal i	1	2	3	4	5	6	7	8
Number of stress cycles $N \times 10^3$ (in ascending order)	115	129	169	178	271	280	305	405
Probability of failure, p_f, % $p_f = \frac{3i-1}{3n+1} \times 100$	8	20	32	44	56	68	80	92

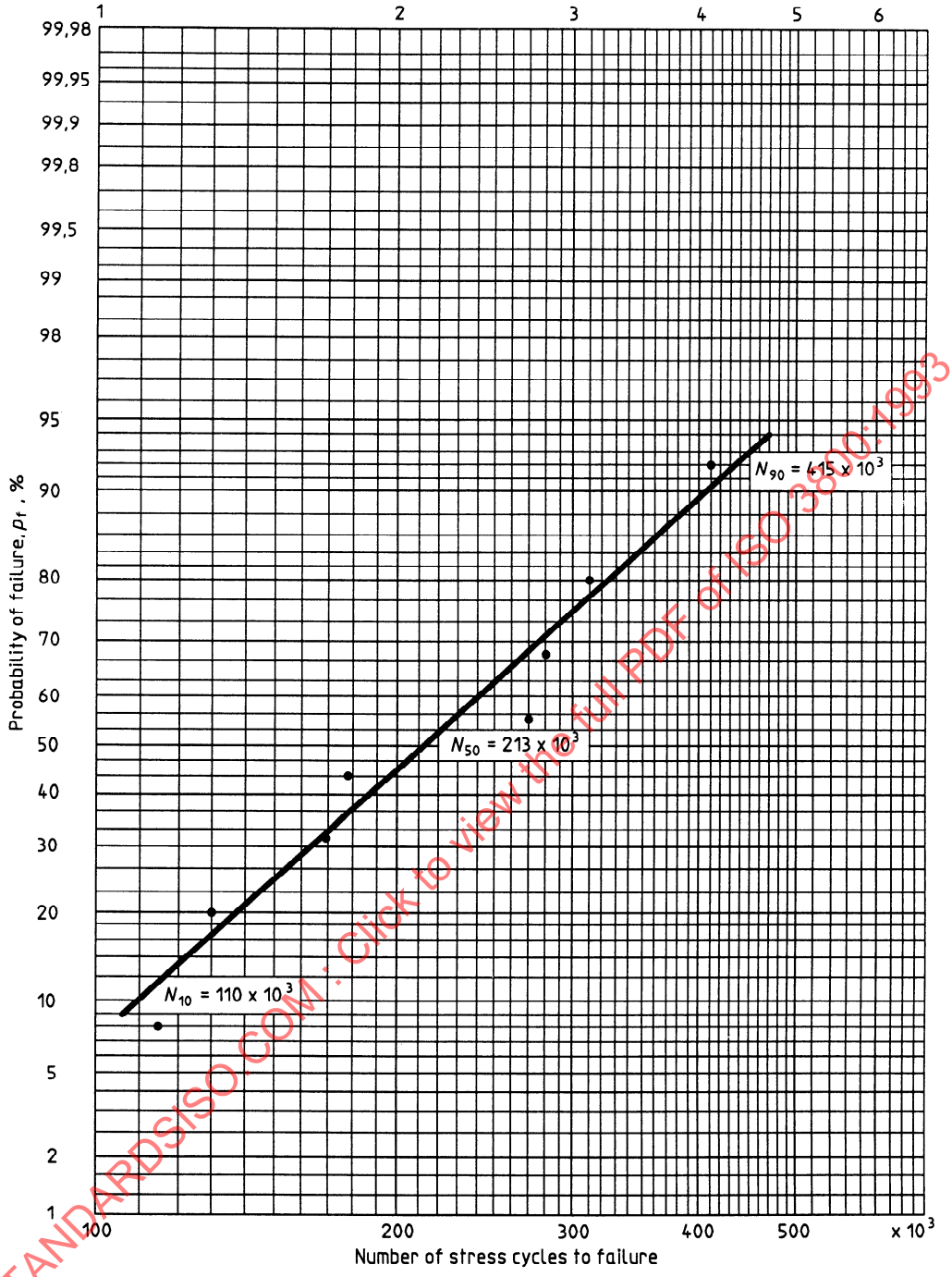

(N_{10}, N_{50}, N_{90} = number of stress cycles with 10 %, 50 % or 90 % probability of failure respectively)

Figure 8 — Probability of failure p_f and number of stress cycles in the finite life range, determined on the basis of 8 fatigue tests with σ_a = 150 N/mm^2

STANDARDSISO.COM : Click to view the full PDF of ISO 3800:1993

7.2.3 Procedures of staircase, boundary and arc sine methods

7.2.3.1 Staircase method

Test the first test piece at a stress level which shall be as close as possible to the expected median of the transition range. If failure occurs, decrease stepwise the load for the next test pieces (the same step size) until there is non-failure. After a non-failure, increase the load stepwise until failure occurs. If non-failure is recorded for the first test piece, the procedure is reversed. In practice, the procedure very quickly centres on the median and, in the case of a large number of test pieces and a favourable position of the starting stress level, the frequencies of failure and non-failure are the same or nearly the same. The event occurring less frequently as a whole is used for the calculation.

The evaluation comprises the following steps:

a) expected median

$$F_{A50} = F_{ao} + \Delta F_{aII}\left(\frac{A}{C} \pm x\right)$$

(See explanations of symbols in table 3.)

b) expected standard deviation

$$S(F_A) = 1{,}62\Delta F_{aII}\left(\frac{CE - A^2}{C^2} + 0{,}029\right)$$

where $\frac{CE - A^2}{C^2}$ shall be > 0,3

(See explanations of symbols in table 3.)

Table 3 shows an example of the evaluation of fatigue tests by the staircase method.

7.2.3.2 Boundary method

The procedure for the boundary method is explained on the basis of figure 9. As the position of the transition range is not known prior to the test and can in general only be approximated, first test a test piece on a first load amplitude. In this case, this load amplitude $F_a = 2\ 500$ N. If this first test piece shows no failure up to the predetermined number of stress cycles N_G, the load amplitude is subsequently increased until the first test piece fails. In the example, this is the load amplitude $F_{a1} = 4\ 000$ N. Carry out several tests on the level on which there is now for the first time an event (failure or non-failure) deviating from the previous tests. Thereby the number of test pieces depends on the required accuracy of the result. In this example, the number of test pieces is eight. For the selection of the second load amplitude, it is advantageous to know the width of the transition range; this allows the second level to be chosen, in a mathematically useful way, at its limit where the expected result becomes more exact.

The following applies to the determination of the second level:

$$F_{a2} = F_{a1} + \Delta F_{aII}$$

with

$$\Delta F_{aII} = \left(1 - \frac{r}{n}\right)BF_{a1} \text{ for } r \leqslant 0{,}5n$$

or

$$\Delta F_{aII} = -\frac{r}{n}BF_{a1} \text{ for } r \geqslant 0{,}5n$$

Quantity B takes account of the width of the transition range. For B, a value between 0,15 and 0,2 is recommended.

On the second load amplitude, found in the example in figure 9, again eight test pieces are tested and the probabilities of failure, p_t, are plotted in the Gaussian probability net according to the estimator:

$$p_t = \frac{3r - 1}{3n + 1}$$

[figure 9, b)]

where

r is the number of failures;

n is the number of test pieces tested.

Using the normal Gaussian distribution, the two points determined can be connected to form a straight line which then allows determination of the median F_{A50} and of the limiting values, such as F_{A10} and F_{A90}, etc.

STANDARDSISO.COM : Click to view the full PDF of ISO 3800:1993

Table 3 — Example of the evaluation of fatigue tests by the staircase method

Test piece : Hexagon head bolt ISO 4014 - M10 × 80 - 8.8

Mean load F_m : $0{,}6F_{0,2}$ (N)

1	2															3	4	5	6	7	8
F_A (N)	x Failure									o Non-failure						x	o	z	f	zf	z^2f
4 700													x			1	0	3	0	0	0
4 300						x		x				o		x		3	1	2	1	2	4
3 900	x		x		o		o		x		o				x	4	3	1	3	3	3
3 500		o		o						o						0	3	0	3	0	0
Test piece No.	1	2	3	4	5	6	7	8	9	10	11	12	13	14	15						
Sum of columns 3, 4, 6, 7, 8																8	7	—	7	5	7
																			C	A	E

$$F_{A50} = F_{ao} + \Delta F_{aII}\left(\frac{A}{C} \pm x\right) = 3\ 929\ \text{N}$$

$$S(F_A) = 1{,}62\Delta F_{aII}\left(\frac{CE - A^2}{C^2} + 0{,}029\right) = 177\ \text{N}$$

Column 1: load amplitude

Column 2: indication of event (failure x, non-failure o)

Column 3: number of failures per load amplitude

Column 4: number of non-failures per load amplitude

Column 5: ordinal z, starting with 0 at the lowest load amplitude

It is assigned to the event with the lower frequency in columns 3 and 4 respectively. In the example in table 3, it is column 4 with only 7 non-failures as compared to column 3 with 9 failures.

Column 6: frequency, repetition of values from column 3 or 4 with the lower sum (here column 4).

Column 7: product of columns 5 and 6 (zf)

Column 8: product of columns 5 and 7 (z^2f)

C, A, E: sum of columns 6, 7 and 8

F_{ao} : lowest load amplitude in columns 3 or 4 with the lower number of events (here column 4, F_{ao} = 3 500 N)

F_{A50} : median, load amplitude with 50 % probability of survival

x : $\begin{cases} +0{,}5 \text{ when column 6 = column 4} \\ -0{,}5 \text{ when column 6 = column 3} \end{cases}$

ΔF_{aII} : step (here ΔF_{aII} = 400 N)

S standard deviation

STANDARDSISO.COM : Click to view the full PDF of ISO 3800:1993

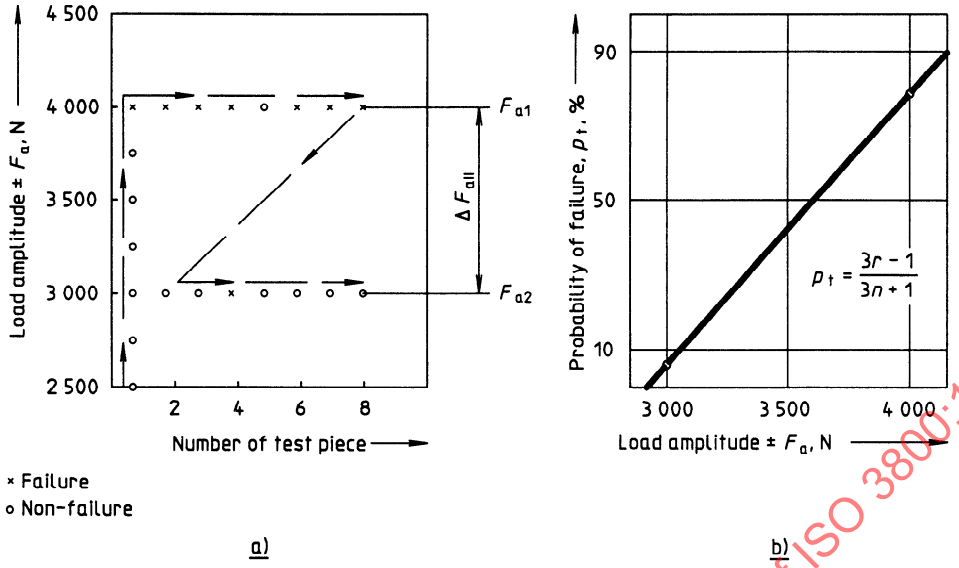

Figure 9 — Example of the execution and evaluation of fatigue tests according to the boundary method

STANDARDSISO.COM : Click to view the full PDF of ISO 3800:1993

7.2.3.3 Arc sine method

The procedure for the arc sine method is similar to that for the boundary method. Carry out fatigue tests on several equidistant alternating load levels with the same number of test pieces per level. For each of these levels, calculate the corresponding probabilities of survival using the $\arcsin\sqrt{p}$ transformation, for example,

$$\tau = \arcsin\sqrt{(x+1)/(n+1)} + \arcsin\sqrt{r/(n+1)}$$

Determine the transition range either graphically in a corresponding probability net or mathematically by determining a regression line after the corresponding transformation of the calculated values.

7.3 Development of complete Wöhler curve (S/N curve)

For the development of a complete Wöhler curve, the results of the test according to 7.1.2 and 7.2.2 are represented graphically in figure 10.

7.4 Combined test method

7.4.1 Number of test specimens

At least 14 specimens are required for the test, that is 2 specimens for each of four stress amplitude levels (8 pieces in total) in order to determine the inclined part of the S/N curve, and 6 specimens in order to determine the horizontal part because the staircase method requires a small number of specimens. Since the test does not always proceed, in practice, as shown in figure 11 and there are some cases where more than 14 specimens are required, reserve some extra specimens.

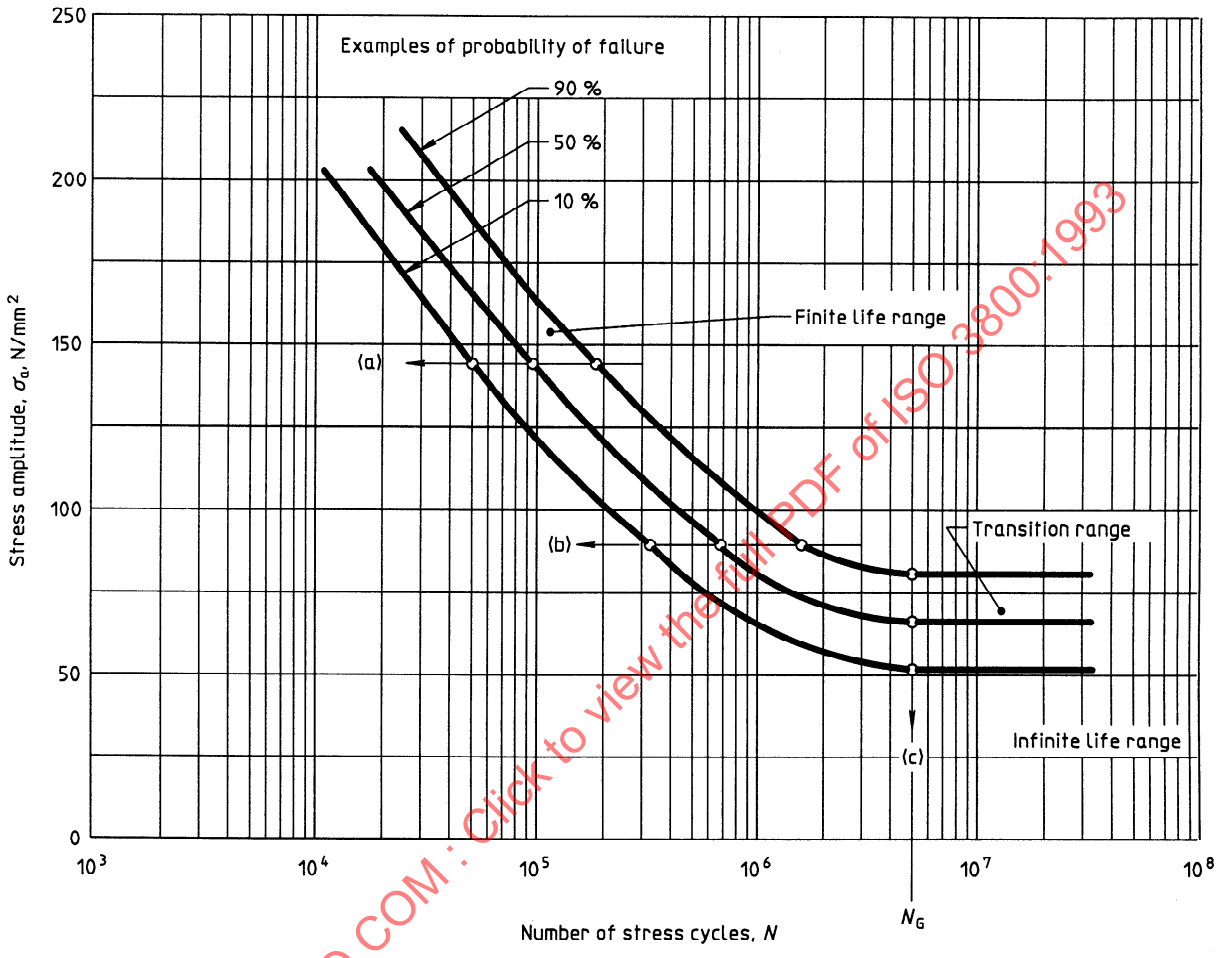

Figure 10 — Wöhler curve (S/N curve) $\sigma_a = f(N)$

STANDARDSISO.COM : Click to view the full PDF of ISO 3800:1993

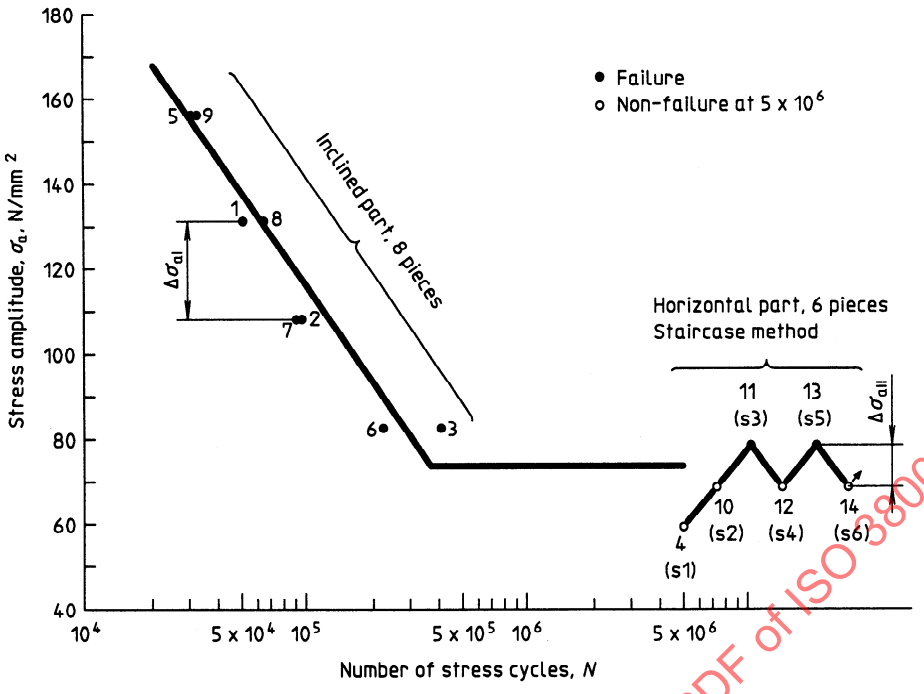

NOTE — The numbers in the figure show the order of test.

Figure 11 — Example of basic pattern of combined test method with 14 specimens

7.4.2 Test in the finite life range

The test method for the finite life range (inclined part of the S/N curve) is as follows.

Predict the finite life strength σ_{AA} and σ_{AB} of the specimen at $N = 5 \times 10^4$ and $N = 1 \times 10^6$ by referring to existing data on materials of the same class, specimens of the same shape and stress cycles of the same type.

Obtain $\Delta\sigma_{aI} = (\sigma_{AA} - \sigma_{AB})/3$. (Round off the numerical values.) Take this value of $\Delta\sigma_{aI}$ as the initial set value for intervals of the test stress amplitude in the inclined part, and take $\sigma_{AA} + k\Delta\sigma_{aI}$ ($k = \pm 1, \pm 2, \ldots$) as the initial set value for the test stress amplitude level.

Test the first specimen at the stress amplitude level $\sigma_a(1) = \sigma_{AA} - \Delta\sigma_{aI}$.

Test one specimen at a time in the order

$$\sigma_a(2) = \sigma_a(1) - \Delta\sigma_{aI},\ \sigma_a(3) = \sigma_a(2) - \Delta\sigma_{aI}, \ldots,$$

by lowering the stress amplitude levels by $\Delta\sigma_{aI}$ each time until the first unbroken specimen is obtained[1]. In this case, check the value of $\Delta\sigma_{aI}$ as the test progresses, correct it and reset $\Delta\sigma_{aI}$ for subsequent levels, if necessary.[1]

Test one specimen at each of the stress amplitude levels at which no specimen has been broken, among the four higher levels adjacent to the level[2] at which the unbroken specimen has been obtained, so that one broken specimen is obtained at each of those four stress amplitude levels.

1) If the predictions for σ_{AA} and σ_{AB} are notably inadequate, some specimens will not be broken at $\sigma_a(1)$. In that case, test one specimen at a time in the order

$$\sigma_a(2) = \sigma_a(1) + 2\Delta\sigma_{aI},\ \sigma_a(3) = \sigma_a(2) + 2\Delta\sigma_{aI}, \ldots,$$

until the first broken specimen is obtained, by raising the stress amplitude level by $2\Delta\sigma_{aI}$ each time instead of lowering it by $\Delta\sigma_{aI}$.

2) When there are two or more stress amplitude levels at which no specimen has been broken (this is possible in the case corresponding to footnote 1)), the highest stress amplitude level among them shall be taken.

STANDARDSISO.COM : Click to view the full PDF of ISO 3800:1993