INTERNATIONAL STANDARD

ISO 4955

Second edition
1994-05-15

Heat-resisting steels and alloys

Aciers et alliages réfractaires

STANDARDSISO.COM : Click to view the full PDF of ISO 4955:1994

Reference number
ISO 4955:1994(E)

Contents

Page

1 Scope 1

2 Normative references 1

3 Ordering 1

4 Requirements 2

5 Testing 2

6 Marking 3

Annexes

A International Standards for dimensions and tolerances 13

B Technical information on heat-resisting steels and alloys 14

STANDARDSISO.COM : Click to view the full PDF of ISO 4955:1994

© ISO 1994
All rights reserved. Unless otherwise specified, no part of this publication may be reproduced or utilized in any form or by any means, electronic or mechanical, including photocopying and microfilm, without permission in writing from the publisher.

International Organization for Standardization
Case Postale 56 • CH-1211 Genève 20 • Switzerland

Printed in Switzerland

Foreword

ISO (the International Organization for Standardization) is a worldwide federation of national standards bodies (ISO member bodies). The work of preparing International Standards is normally carried out through ISO technical committees. Each member body interested in a subject for which a technical committee has been established has the right to be represented on that committee. International organizations, governmental and non-governmental, in liaison with ISO, also take part in the work. ISO collaborates closely with the International Electrotechnical Commission (IEC) on all matters of electrotechnical standardization.

Draft International Standards adopted by the technical committees are circulated to the member bodies for voting. Publication as an International Standard requires approval by at least 75 % of the member bodies casting a vote.

International Standard ISO 4955 was prepared by Technical Committee ISO/TC 17, *Steel*, Subcommittee SC 4, *Heat treatable and alloy steels*.

This second edition cancels and replaces the first edition (ISO 4955:1983), of which it constitutes a technical revision.

Annexes A and B of this International Standard are for information only.

STANDARDSISO.COM : Click to view the full PDF of ISO 4955:1994

This page intentionally left blank

STANDARDSISO.COM : Click to view the full PDF of ISO 4955:1994

Heat-resisting steels and alloys

1 Scope

1.1 This International Standard specifies requirements for the grades of wrought steels and alloys listed in tables 1 and 2 which are usually employed for products for which the resistance to the effects of hot gases and the products of combustion at temperatures in the region above 550 °C is the main requirement.

1.2 This International Standard is applicable to

— bars;

— flat products;

— wire and rod;

— forgings.

NOTES

1 Steels which have an increased resistance to deformation when they are subjected for long periods to mechanical stresses are covered by ISO/TR 4956:1984, *Wrought steels for use at elevated temperatures in engines*. Further heat-resisting steels and alloys for valves are covered by ISO 683-15:1992, *Heat-treatable steels, alloy steels and free-cutting steels — Part 15: Valve steels for internal combustion engines*.

2 Not all of the steels included in this International Standard are necessarily available in all product forms.

1.3 In addition to this International Standard, the general technical delivery requirements of ISO 404 are applicable.

2 Normative references

The following standards contain provisions which, through reference in this text, constitute provisions of this International Standard. At the time of publication, the editions indicated were valid. All standards are subject to revision, and parties to agreements based on this International Standard are encouraged to investigate the possibility of applying the most recent editions of the standards indicated below. Members of IEC and ISO maintain registers of currently valid International Standards.

ISO 377-1:1989, *Selection and preparation of samples and test pieces of wrought steels — Part 1: Samples and test pieces for mechanical test.*

ISO 377-2:1989, *Selection and preparation of samples and test pieces of wrought steels — Part 2: Samples for the determination of the chemical composition.*

ISO 404:1992, *Steel and steel products — General technical delivery requirements.*

ISO/TR 4949:1989, *Steel names based on letter symbols.*

ISO 6506:1981, *Metallic materials — Hardness test — Brinell test.*

ISO 6892:1984, *Metallic materials — Tensile testing.*

ISO/TR 9769:1991, *Steel and iron — Review of available methods of analysis.*

ISO 10474:1991, *Steel and steel products — Inspection documents.*

3 Ordering

3.1 The purchaser shall state in his enquiry and order

a) the type of steel or alloy (see table 1 or 2);

b) the product form and the dimensions and tolerances of the product (see 4.6);

STANDARDSISO.COM : Click to view the full PDF of ISO 4955:1994

c) the treatment condition, including surface condition [see 4.2, 4.5 and footnote 3) to table 5];

d) the quantity to be delivered;

e) the required type of document (see 5.1).

3.2 Certain options in ordering are permitted by this International Standard and the purchaser may also state, in his enquiry and order, the following related requirements:

a) whether a product analysis is required (see 5.2.1);

b) whether the mechanical properties are to be verified on reference test pieces (see 4.4).

4 Requirements

4.1 Manufacture of the steel and of the product

Unless otherwise agreed in the order, the processes used in making the steel and the product are left to the discretion of the manufacturer. When he so requests, the purchaser shall be informed what steelmaking process is being used.

4.2 Treatment and surface condition at delivery

4.2.1 The heat-treatment condition at the time of delivery shall comply with one of the conditions indicated in table 6. The manufacturer shall choose the heat treatment (for guidance, see table B.1) such that the properties are met.

4.2.2 The type of condition and surface condition of the products shall be one of those indicated in table 5.

4.3 Chemical composition

4.3.1 The chemical composition of the steels and alloys, as given by the cast analysis, shall be in accordance with the specifications in tables 1 and 2.

4.3.2 The permissible deviations between the values specified in tables 1 and 2 and the product analysis are given in tables 3 and 4.

4.4 Mechanical properties

For the usual heat-treatment conditions, the mechanical properties are specified in table 6.

If the products are delivered in the non-heat-treated condition, and if agreed at the time of enquiry and order, the mechanical properties specified in table 6 shall be achievable for suitably treated reference test pieces.

4.5 Surface condition

The products shall be ordered in the type of condition and surface condition indicated in table 5. Availability, and the determination of the types of condition most suited to a particular case, should be discussed with the supplier. Except for symbols F10, F11, and F12, minor surface irregularities caused by the manufacturing process are no cause for rejection.

4.6 Dimensions and tolerances

4.6.1 Where possible, the products shall be ordered and delivered in accordance with existing International Standards for dimensions and tolerances (see the list in annex A). The ordered dimensions shall, where applicable, include the minimum machining allowances.

4.6.2 If none of the International Standards listed in annex A is applicable, then the dimensions and tolerances shall be agreed at the time of enquiry and order on the basis of regional or national standards.

5 Testing

5.1 Agreement of tests and documents

5.1.1 For each delivery, the issue of any document according to ISO 10474 may be agreed upon at the time of enquiry and order.

5.1.2 If, in accordance with such an agreement, a specific inspection is to be carried out, the specifications given in 5.2 to 5.5 shall apply.

5.2 Number of tests

5.2.1 Chemical composition

The cast analysis shall be provided by the manufacturer. If a product analysis is required by the purchaser, one sample product shall be taken from each cast.

STANDARDSISO.COM : Click to view the full PDF of ISO 4955:1994

5.2.2 Mechanical properties

The test unit consists of products of the same cast, the same size (see note 3) and the same heat-treatment batch.

All material from the same continuous heat-treatment operation, during the same operating period, is considered to be of the same heat-treatment batch.

For the tensile test at room temperature or for the hardness test, one test piece shall be taken per test unit.

NOTE 3 Products with deviations of 25 % from the largest size may be assembled.

5.3 Selection and preparation

5.3.1 General

The general conditions given in ISO 377-1 and ISO 377-2 for the selection and preparation of samples and test pieces shall apply.

5.3.2 Product analysis

For product analysis, the selection and preparation of samples shall be carried out in conformity with the requirements of ISO 377-2.

5.3.3 Tensile test

5.3.3.1 For the tensile test the requirements of 5.3.3.2 and 5.3.3.3 apply.

If products are delivered in the untreated condition, the sample shall be converted into the usual heat-treatment condition according to tables 6 and B.1.

5.3.3.2 In the case of bars and wire or rod, the test pieces shall be taken according to figure 1 in the longitudinal direction of the products. In cases of dispute, the tensile test pieces shall have a gauge length of

$$L_0 = 5{,}65\sqrt{S_0}$$

where S_0 is the original cross-section.

5.3.3.3 For flat products, the test pieces are to be taken in accordance with figure 2. In cases of dispute, products of thickness $\geqslant$ 3 mm shall have a gauge length of

$$L_0 = 5{,}65\sqrt{S_0}$$

For products of thickness < 3 mm, test pieces either of 20 mm width and 80 mm gauge length or of 12,5 mm width and 50 mm gauge length according to ISO 6892 may be used.

5.3.4 Hardness test

Details for the selection and preparation of samples and test pieces for hardness tests may be agreed upon at the time of enquiry and order.

5.4 Methods of test

5.4.1 Chemical analysis

In the case of dispute about analytical methods, the chemical composition shall be determined in accordance with a reference method taken from International Standards listed in ISO/TR 9769.

5.4.2 Tensile test

The tensile test shall be carried out in accordance with ISO 6892.

5.4.3 Hardness test

The Brinell hardness test shall be carried out in accordance with ISO 6506.

5.5 Retests

Retests shall be carried out in accordance with ISO 404.

6 Marking

The products shall be marked with the manufacturer's symbol, the steel or alloy grade, and, if so agreed when ordering, with the cast number. When specific inspection is carried out, the products are to be provided additionally with an identification number which enables the test pieces to be related to the cast and product from which they stem.

STANDARDSISO.COM : Click to view the full PDF of ISO 4955:1994

© ISO

Dimensions in millimetres

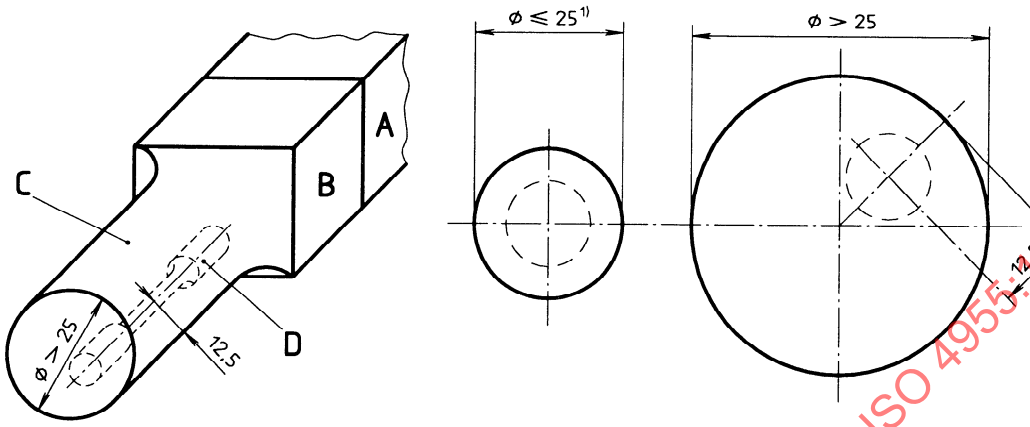

A = Sample product
B = Test sample
C = Test bar (the piece after reduction to the size in which it is to be heat treated)
D = Test piece

Circular and similar shaped sections

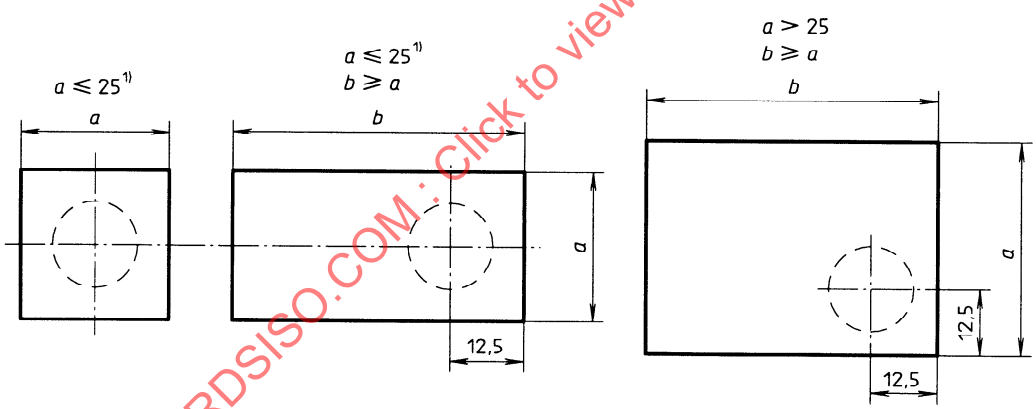

Rectangular sections including squares

Tensile test piece

1) For small products (a or $b \leqslant 25$ mm), the test piece shall, if possible, consist of an unmachined part of the bar.

Figure 1 — Location of the tensile test pieces in bars and wire or rods

STANDARDSISO.COM : Click to view the full PDF of ISO 4955:1994

Type of test	Thickness of product	Position of longitudinal test piece axis for a product width, w		Distance of test piece from rolling surface
	mm	$w < 300$ mm	$w \geqslant 300$ mm	mm
Tensile test[1]	$\leqslant 30$	longitudinal	transverse	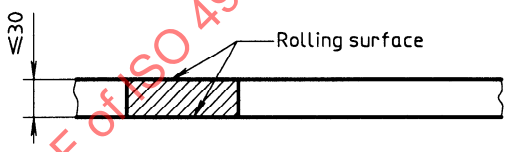
	> 30			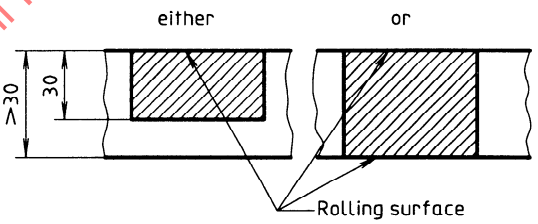

1) The test piece shall be in accordance with ISO 6892. Except in case of dispute, for thicknesses equal to or greater than 20 mm, round test pieces may be used. For thicknesses > 30 mm, the round test piece is to be taken in 1/4 of the product thickness.

Figure 2 — Location of test pieces in sheet, strip or plate

STANDARDSISO.COM : Click to view the full PDF of ISO 4955:1994

Table 1 — Types of steel and chemical composition (applicable to cast analysis)

Elements not quoted in this table shall not be intentionally added to the steel without the agreement of the purchaser, other than for finishing the heat. All reasonable precautions should be taken to prevent the addition of such elements from scrap or other materials used in the manufacture, but residual elements may be present provided that the mechanical properties and applicability are not adversely affected.

Type of steel Designation[1]			Chemical composition [% (m/m)]							
No.	Name	according to ISO 4955:1983	C max.	Si	Mn max.	P max.	S max.	Cr	Ni	Others
Ferritic steels										
1	X 6 CrTi 12	H1	0,08	⩽ 1,0	1,0	0,040	0,030	10,5 to 12,5	⩽ 1,0	Ti: 6 × % C ⩽ 1,0
2	X 6 Cr 13	H2	0,08	⩽ 1,0	1,0	0,040	0,030	12,0 to 14,0	⩽ 1,0	—
3	X 10 CrAlSi 13	H3	0,12	0,70 to 1,4	1,0	0,040	0,030	12,0 to 14,0	⩽ 1,0	Al: 0,70 to 1,20
4	X 6 Cr 17	H4	0,08	⩽ 1,0	1,0	0,040	0,030	16,0 to 18,0	⩽ 1,0	—
5	X 10 CrAlSi 18	H5	0,12	0,70 to 1,4	1,0	0,040	0,030	17,0 to 19,0	⩽ 1,0	Al: 0,70 to 1,20
6	X 10 CrAlSi 25	H6	0,12	0,70 to 1,4	1,0	0,040	0,030	23,0 to 26,0	⩽ 1,0	Al: 1,20 to 1,70
7	X 15 CrN 26	H7	0,20	⩽ 1,0	1,0	0,040	0,030	24,0 to 28,0	⩽ 1,0	N: 0,15 to 0,25
Austenitic steels										
10	X 7 CrNi 18-9	H10	0,10[2]	⩽ 1,0	2,0	0,045	0,030	17,0 to 19,0	8,0 to 11,0	—
11	X 7 CrNiTi 18-10	H11	0,10[2]	⩽ 1,0	2,0	0,045	0,030	17,0 to 19,0	9,0 to 12,0	Ti: 5 × % C ⩽ 0,80
12	X 7 CrNiNb 18-10	H12	0,10[2]	⩽ 1,0	2,0	0,045	0,030	17,0 to 19,0	9,0 to 12,0	Nb: 10 × % C ⩽ 1,2 [3]
13	X 15 CrNiSi 20-12	H13	0,20	1,5 to 2,5	2,0	0,045	0,030	19,0 to 21,0	11,0 to 13,0	—
14	X 7 CrNiSiNCe 21-11	—	0,10[4]	1,4 to 2,0	0,80	0,040	0,030	20,0 to 22,0	10,0 to 12,0	N: 0,14 to 0,20; Ce: 0,03 to 0,08
15	X 6 CrNi 23-14	H14	0,08	⩽ 1,0	2,0	0,045	0,030	22,0 to 24,0	12,0 to 15,0	—
16	X 6 CrNi 25-21	H15	0,08	⩽ 1,5	2,0	0,045	0,030	24,0 to 26,0	19,0 to 22,0	—
17	X 15 CrNiSi 25-21	H16	0,20	1,5 to 2,5	2,0	0,045	0,030	24,0 to 26,0	19,0 to 22,0	—
18	X 12 NiCrSi 35-16	H17	0,15	1,0 to 2,0	2,0	0,045	0,030	15,0 to 17,0	33,0 to 37,0	—
19	X 6 NiCrSi 36-19	—	0,08	0,75 to 1,5	2,0	0,030	0,030	17,0 to 20,0	34,0 to 37,0	Cu: ⩽ 1,0; Pb: ⩽ 0,005; Sn: ⩽ 0,025
20	X 8 NiCrAlTi 32-21	H18	0,10[4]	⩽ 1,0	1,5	0,015	0,015	19,0 to 23,0	30,0 to 34,0	Al: 0,15 to 0,60 Ti: 0,15 to 0,60 Cu: ⩽ 0,7

1) The designations given in the first column are consecutive numbers. The designations given in the second column are in accordance with ISO/TR 4949. The designations given in the third column represent the antiquated numbers of ISO 4955:1983.

2) A minimum of 0,04 % C shall also apply.

3) Tantalum determined as niobium.

4) A minimum of 0,05 % C shall also apply.

STANDARDSISO.COM : Click to view the full PDF of ISO 4955:1994

Table 2 — Types of alloys and chemical composition (applicable to cast analysis)

Type of alloy[1] Designation[2]			Chemical composition [% (*m/m*)]													
No.	**Name**	**according to ISO 4955:1983**	**C**	**Si** max.	**Mn** max.	**P** max.	**S** max.	**Al** max.	**Co** max.	**Cr**	**Cu** max.	**Fe**	**Mo**	**Nb +Ta**	**Ni**	**Ti**
NW6600	NiCr15Fe8	H20	⩽ 0,15	0,5	1,0	—	0,015	—	[3]	14,0 to 17,0	0,5	6,0 to 10,0	—	—	⩾ 72,0	—
NW6621	NiCr20Ti	H21	0,08 to 0,15	1,0	1,0	—	0,020	—	5,0	18,0 to 21,0	0,5	⩽ 5,0	—	—	Re-mainder	0,20 to 0,60
NW6625	NiCr22Mo9Nb	H22	⩽ 0,10	0,50	0,50	0,015	0,015	0,40	1,0	20,0 to 23,0	—	⩽ 5,0	8,0 to 10,0	3,15 to 4,15	⩾ 58,0	⩽ 0,40

1) In addition to the grades listed in this table, other nickel alloys, e.g. NW6002, NW6601 and NW6617 (see ISO 9722, ISO 9723, etc.), are also used for the same purpose, but because of insufficient data they are not listed here.

2) The designations given in the first two columns are the same as in ISO 9722, and for alloy designation either the number or the name may be used. The designations given in the third column represent the antiquated numbers of ISO 4955:1983.

3) A maximum of 1,5 % Co is allowed and counted as nickel. Reporting of cobalt is not required.

STANDARDSISO.COM : Click to view the full PDF of ISO 4955:1994

Table 3 — Permissible deviations between specified analysis and product analysis for the steels (see table 1)

Element	Cast analysis (specified limits) % (*m/m*)		Permissible deviations[1] from the specified composition % (*m/m*)
C		⩽ 0,20	± 0,01
Si		⩽ 1,0	± 0,05
	> 1,0	⩽ 2,5	± 0,10
Mn		⩽ 1,0	+ 0,03
	> 1,0	⩽ 2,0	+ 0,04
P		⩽ 0,040	+ 0,005
	> 0,040	⩽ 0,045	+ 0,010
S		⩽ 0,030	+ 0,005
N		⩽ 0,25	+ 0,02 − 0,01
Al		⩽ 0,60	± 0,05
	> 0,60	⩽ 1,70	± 0,10
Cr	⩾ 10,5	< 15,0	± 0,15
	⩾ 15,0	⩽ 20,0	± 0,20
	> 20,0	⩽ 28,0	± 0,25
Nb		⩽ 1,2	± 0,05
Ni		⩽ 1,0	+ 0,03
	⩾ 8,0	⩽ 10,0	± 0,10
	> 10,0	⩽ 20,0	± 0,15
	> 20,0	⩽ 30,0	± 0,20
	> 30,0	⩽ 37,0	± 0,25
Ti		⩽ 1,0	± 0,05

1) ± means that in one cast, and in more than one product analysis, the deviation may occur over the upper value or under the lower value of the specified range given in table 1, but not both at the same time.

STANDARDSISO.COM : Click to view the full PDF of ISO 4955:1994

Table 4 — Permissible deviations between specified analysis and product analysis for the alloys (see table 2)

Element	Cast analysis (specified limits) % (*m/m*)		Permissible deviations[1] from the specified composition % (*m/m*)
C		⩽ 0,15	± 0,01
Si		⩽ 1,0	± 0,05
Mn		⩽ 1,0	+ 0,03
P		⩽ 0,015	+ 0,005
S		⩽ 0,020	+ 0,005
Al		⩽ 0,40	± 0,05
Co		⩽ 5,0	± 0,10
Cr		⩽ 20,0	± 0,20
	> 20,0	⩽ 23,0	± 0,25
Cu		⩽ 0,5	± 0,05
Fe		⩽ 10,0	± 0,10
Mo	⩾ 8,0	⩽ 10,0	± 0,10
Nb + Ta	⩾ 3,15	⩽ 4,15	+ 0,05
Ni	⩾ 58,0		± 0,25
Ti		⩽ 0,60	± 0,05

1) ± means that in one cast, and in more than one product analysis, the deviation may occur over the upper value or under the lower value of the specified range given in table 2, but not both at the same time.

STANDARDSISO.COM : Click to view the full PDF of ISO 4955:1994

Table 5 — Type of condition and surface condition of heat-resisting steel products

Combinations of the different conditions may be agreed upon at the time of enquiry and order.

Symbol[1]	Type of condition	Surface condition	Form of product				Remarks
			Bars	Flat products	Wire (rods)	Forgings	
F1	Hot formed, not heat treated, not descaled	Covered with rolling skin, except for conditioned portions	×	×	×	—	Suitable only for parts which will be descaled or machined after production, preferably for products which will be hot worked
F3	Hot formed, heat treated, not descaled	Covered with rolling skin	×	×	×	×	Suitable only for parts which will be descaled all over or machined after production
F4	Hot formed, heat treated, mechanically descaled	Metallically clean	×	×	×	×	The type of mechanical descaling, for example rough grinding, blasting or rough peeling, depends on the product form and is, unless otherwise agreed, left to the discretion of the manufacturer
F5	Hot formed, heat treated, pickled		×	—	—	×	
F6	Hot formed, heat treated, prepared by machining	Metallic bright	×	—	×	×	—
F7	Mechanically or chemically descaled, cold formed, heat treated, pickled	Smoother than for condition F4 or F6	×	×	×	—	—
F8	Mechanically or chemically descaled, cold rolled, bright annealed or bright annealed and slightly rerolled	Bright and smoother than for condition F7	—	×	×	—	Especially suitable for grinding, polishing and brushing
F9	Mechanically or chemically descaled, cold formed, heat treated, pickled, slightly rerolled or bright drawn	Matt and smoother than for condition F7	×	×	×	—	Apart from exceptions among sheets and strips, products in this condition are somewhat harder than those of surface condition F7 or F8; they are especially suitable for grinding, brushing and polishing
F10	Ground	Where necessary, details should be agreed upon at the time of enquiry and order	×	×	—	—	The conditions F7, F8 or F9 are normally used as starting conditions[2]
F11	Polished		×	×	×	—	
F12	Brushed	Matt silk	—	×	—	—	The best starting conditions are surface conditions F8 and F9[2]

1) The symbols are preliminary. It is intended to establish a system of symbols for the different types of condition and surface condition.

2) For flat products, the order shall indicate in each case whether grinding, polishing or brushing is to be performed on both sides or on one side.

STANDARDSISO.COM : Click to view the full PDF of ISO 4955:1994

Table 6 — Mechanical properties for the steels and alloys in the usual delivery condition

Type of steel or alloy	Product		Heat treatment[1]	Mechanical properties[2]							
	Form	Thickness a or diameter d [3]		HB [4]	$R_{p\,0,2}$ [5]	$R_{p\,1,0}$ [5]	R_m	A_{min} [6] (%)			
				max.	min.	min.		Bars, wire or rod, forgings	Flat product with thickness a (mm)		
									$0,5 \leqslant a < 3$	$3 \leqslant a$	
		mm			N/mm²	N/mm²	N/mm²		l, tr	l	tr
Ferritic steels											
X 6 CrTi 12	Flat products	$0,5 \leqslant a \leqslant 12$	TA	184	210[7]	—	390 to 590	25	18	25	23
X 6 Cr 13			TA	197	230	—	400 to 630	20	18	20	18
X 10 CrAlSi 13	Bars	$5 \leqslant d \leqslant 25$	TA	192	250	—	400 to 650	15	13	15	15
X 6 Cr 17	Forgings	$5 \leqslant d \leqslant 15$	TA	197	250	—	430 to 630	20	18	20	18
X 10 CrAlSi 18			TA	212	270	—	500 to 700	15	13	15	15
X 10 CrAlSi 25	Wire or rod	$1,5 \leqslant d \leqslant 20$	TA	223	280	—	520 to 720	10	13	15	15
X 15 CrN 26			TA	212	280	—	500 to 700	15	13	15	15
Austenitic steels											
X 7 CrNi 18-9	Flat products	$0,5 \leqslant a \leqslant 75$	TQ	192	195	230	500 to 700	40	37	40	
X 7 CrNiTi 18-10			TQ	192	200	235	510[8] to 710	35	33	35	
X 7 CrNiNb 18-10			TQ	192	205	240	510 to 710	30	28	30	
X 15 CrNiSi 20-12	Bars	$5 \leqslant d \leqslant 160$	TQ	223	230	270	550 to 750	30	28	30	
X 7 CrNiSiNCe 21-11			TQ	210	310	345	650 to 850	40	37	40	
X 6 CrNi 23-14			TQ	192	210	250	500 to 700	35	33	35	
X 6 CrNi 25-21	Forgings	$\leqslant 100$	TQ	192	210	250	500 to 700	30	28	30	
X 15 CrNiSi 25-21			TQ	223	230	270	550 to 750	30	28	30	
X 12 NiCrSi 35-16			TQ	223	230	270	550 to 750	30	28	30	
X 6 NiCrSi 36-19	Wire or rod	$1,5 \leqslant d \leqslant 20$	TQ	223	230	270	550 to 750	30	28	30	
X 8 NiCrAlTi 32-21			TQ	192	170	210	450 to 680	30	28	30	

STANDARDSISO.COM : Click to view the full PDF of ISO 4955:1994

Type of steel or alloy	Product: Form	Product: Thickness a or diameter d 3)	Heat treatment 1)	Mechanical properties 2): HB 4)	$R_{p\,0,2}$ 5)	$R_{p\,1,0}$ 5)	R_m	A_{min} 6) (%): Bars, wire or rod, forgings	Flat product with thickness a (mm): $0,5 \leqslant a < 3$	Flat product with thickness a (mm): $3 \leqslant a$	
		mm		max.	min. N/mm²	min. N/mm²	N/mm²		l, tr	l	tr
Alloys											
NiCr15Fe8	Flat products	$a \leqslant 100$	TQ	—	240	—	$\geqslant 550$	—	30 9)	30 9)	
	Bars	$d \leqslant 315$						30 9)	—	—	
	Forgings	all						30 9)	—	—	
	Cold drawn wire	$d \leqslant 0,45$		—	—	—	$\geqslant 550$	20 9)	—	—	
		$0,45 < d \leqslant 10$		—	—	—	$\geqslant 550$	25 9)	—	—	
NiCr20Ti	Flat products	$0,3 < a \leqslant 0,5$	TQ	—	230	—	$\geqslant 640$	—	25 9)	—	
		$0,5 < a \leqslant 100$						—	30 9)	30 9)	
	Bars	$d \leqslant 315$						30 9)	—	—	
	Forgings	all						30 9)	—	—	
	Cold-drawn wire	$d \leqslant 10$		—	—	—	$\geqslant 650$	—	—	—	
NiCr22Mo9Nb	Flat products, hot rolled	$4 < a \leqslant 100$	TQ	—	380	—	$\geqslant 760$	—	—	30 9)	
	Flat products, cold rolled	$a \leqslant 4$		—	415	—	$\geqslant 830$	—	30 9)	30 9)	
	Bars, forgings	$d \leqslant 100$		—	415	—	$\geqslant 830$	30 9)			
		$100 < d \leqslant 250$		—	345	—	$\geqslant 760$	25 9)	—	—	
	Cold-drawn wire	$d \leqslant 10$		—	415	—	$\geqslant 830$	30 9)	—	—	

1) TA = annealed, TQ = quenched (see also table B.1). Note that, in the documents of ISO/TC 155, *Nickel and nickel alloys*, the term "solution treated" is used for TQ.

2) $R_{p\,0,2}$ = 0,2 % proof stress; $R_{p\,1,0}$ = 1,0 % proof stress; R_m = tensile strength } 1 N/mm² = 1 MPa

3) For other dimensions, the mechanical properties shall be negotiated.

4) For thin materials, the HRB or HV hardness test may be used, by agreement between user and manufacturer, where it is not practicable to use the HB test.

5) The minimum value of $R_{p\,0,2}$ shall be determined, unless, in the case of austenitic steels, it has been agreed between the purchaser and the supplier that the minimum of value $R_{p\,1,0}$ is required instead of that of $R_{p\,0,2}$.

6) In the case of ferritic and austenitic steels, the values for bars, forgings, wires having a diameter of $\geqslant$ 3 mm and flat products having a thickness of $\geqslant$ 3 mm are valid for a gauge length of $L_0 = 5,65\sqrt{S_0}$; for flat products of thickness a with $0,5 \leqslant a \leqslant 3$ mm, the values are valid for both test pieces specified in ISO 6892.

7) If used for construction purposes, a minimum of 260 N/mm² may be agreed upon at the time of enquiry and order.

8) For bars above 100 mm diameter or thickness, a lower value is to be agreed.

9) Elongation is not applicable to flat products in thicknesses less than 0,25 mm.

The elongation values listed are based either on

— a proportional gauge length $5,65\sqrt{S_0} \mathrel{\hat{=}} A_5$, or on

— a fixed gauge length of 50 mm $\mathrel{\hat{=}} A_{50}$.

STANDARDSISO.COM : Click to view the full PDF of ISO 4955:1994

Annex A
(informative)

International Standards for dimensions and tolerances

[1] ISO 1035-1:1980, *Hot-rolled steel bars — Part 1: Dimensions of round bars.*

[2] ISO 1035-2:1980, *Hot-rolled steel bars — Part 2: Dimensions of square bars.*

[3] ISO 1035-3:1980, *Hot-rolled steel bars — Part 3: Dimensions of flat bars.*

[4] ISO 1035-4:1982, *Hot-rolled steel bars — Part 4: Tolerances.*

[5] ISO 7452:1984, *Hot-rolled structural steel plates — Tolerances on dimensions and shape.*

[6] ISO 8457-1:1989, *Steel wire rod — Part 1: Dimensions and tolerances.*

[7] ISO 9444:1990, *Hot-rolled stainless steel wide strip and sheet — Tolerances on dimensions and form.*

[8] ISO 9445:1990, *Cold-rolled stainless steel wide strip and sheet — Tolerances on dimensions and form.*

[9] ISO 9446:1990, *Hot-rolled stainless steel narrow strip — Tolerances on dimensions and form.*

[10] ISO 9447:1990, *Cold-rolled stainless steel narrow strip — Tolerances on dimensions and form.*

STANDARDSISO.COM : Click to view the full PDF of ISO 4955:1994

Annex B
(informative)

Technical information on heat-resisting steels and alloys

B.1 General

The property values contained in the preceding specification are delivery requirements. The property values indicated in this annex are not delivery requirements. The data given in this annex are provided only as a guide for the heat treatment and for the relative performance of the different steels and alloys. Users should assure themselves of the actual properties achieved in practice.

B.2 Heat-treatment

For information on heat-treatment, see table B.1.

B.3 Heat resistance

The steels and alloys given in tables 1 and 2 have, by virtue of their alloy content, an increased resistance to attack by hot gases and combustion products. This resistance and, consequently, the maximum service temperature of the materials is, however, largely dependent on the conditions of attack. For use in clean air under conditions where the mechanical stresses (see table B.3) are unimportant with regard to service life, the maximum service temperature indicated in table B.2 can be taken as a guide.

A warning is given that where the material is to be used in atmospheres other than clean air, then the values in table B.2 should not be taken as applicable for the maximum temperature of use. In such cases, the rate of oxidation of the steels and alloys can be significantly increased, depending on their chemical composition, so that as a consequence the maximum temperature of use can be reduced considerably and could be, for example, several hundred degrees lower than the temperatures in table B.2.

B.4 Creep resistance

In table B.3, the average creep stresses for 1 % elongation ($R_{p1,0}$) and rupture (R_m) after durations of 1 000 h and 10 000 h are given for guidance only [see footnote 2) to table B.3].

B.5 Physical properties

In table B.4, the physical properties of the steels and alloys are given for guidance.

B.6 Technological properties

B.6.1 The steels and alloys are suitable for hot working. The optimum hot-working conditions shall, where necessary, be requested from the manufacturer.

B.6.2 The steels and alloys are suitable for cold forming. It is, however, recommended that ferritic steels be annealed before working. Furthermore, the marked tendency of austenitic steels to work-harden should be noted.

B.6.3 The steels and alloys may generally be welded by the usual welding processes. It is, however, recommended that users who have not had experience in welding these materials should consult the suppliers regarding appropriate welding conditions.

Additionally, the tendency of ferritic steels to grain growth when being welded should be taken into account.

STANDARDSISO.COM : Click to view the full PDF of ISO 4955:1994

Table B.1 — Heat treatment (for guidance only)

Type of steel or alloy	Heat treatment		
	Symbol[1]	Temperature[2] (°C)	Cooling[3]
Ferritic steels			
X 6 CrTi 12	TA	800 ± 50	a, f
X 6 Cr 13	TA	775 ± 25	a, f
X 10 CrAlSi 13	TA	825 ± 25	a, (w)[4]
X 6 Cr 18	TA	800 ± 50	a, w, f
X 10 CrAlSi 18	TA	825 ± 25	a, (w)[4]
X 10 CrAlSi 25	TA	825 ± 25	a, (w)[4]
X 15 CrN 26	TA	825 ± 25	a, (w)[4]
Austenitic steels			
X 7 CrNi 18-9	TQ	1 050 ± 50	w, a[5]
X 7 CrNiTi 18-10	TQ	1 070 ± 50	w, a[5]
X 7 CrNiNb 18-10	TQ	1 070 ± 50	w, a[5]
X 15 CrNiSi 20-12	TQ	1 100 ± 50	w, (a)
X 7 CrNiSiNCe 21-11	TQ	1 070 ± 50	w, a
X 6 CrNi 23-14	TQ	1 100 ± 50	w, (a)
X 6 CrNi 25-21	TQ	1 100 ± 50	w, (a)
X 15 CrNiSi 25-21	TQ	1 100 ± 50	w, (a)
X 12 NiCrSi 35-16	TQ	1 070 ± 50	w, (a)
X 6 NiCrSi 36-19	TQ	1 085 ± 65	w, (a)
X 8 NiCrAlTi 32-21	TQ	1 150 ± 50 [6]	a, w
Alloys			
NiCr15Fe8	TQ	1 025 ± 25 [7]	a, w
NiCr20Ti	TQ	1 025 ± 25	a
NiCr22Mo9Nb	TQ	975 ± 25	a, w

1) TA = annealed; TQ = quenched.

2) In the case where the heat treatment is performed in a continuous furnace, the upper part of the given temperature range, or even a temperature in excess of it, is normally preferred.

3) a = air; f = furnace; w = water.

4) In special cases, furnace cooling is also permitted.

5) Cooling sufficiently rapid.

6) A grain size of 0 to 5 after heat treatment is recommended.

7) Depending on the degree of cold work applied to the product and the type of furnace employed in heat treatment, the quenching temperature can vary to a considerable extent to enable the properties to be achieved.

STANDARDSISO.COM : Click to view the full PDF of ISO 4955:1994