INTERNATIONAL STANDARD

ISO 657-1

First edition
1989-08-01

Hot-rolled steel sections —

Part 1 :
Equal-leg angles — Dimensions

Profilés en acier laminés à chaud —
Partie 1 : Cornières à ailes égales — Dimensions

STANDARDSISO.COM : Click to view the full PDF of ISO 657-1:1989

Reference number
ISO 657-1 : 1989 (E)

Foreword

ISO (the International Organization for Standardization) is a worldwide federation of national standards bodies (ISO member bodies). The work of preparing International Standards is normally carried out through ISO technical committees. Each member body interested in a subject for which a technical committee has been established has the right to be represented on that committee. International organizations, governmental and non-governmental, in liaison with ISO, also take part in the work. ISO collaborates closely with the International Electrotechnical Commission (IEC) on all matters of electrotechnical standardization.

Draft International Standards adopted by the technical committees are circulated to the member bodies for approval before their acceptance as International Standards by the ISO Council. They are approved in accordance with ISO procedures requiring at least 75 % approval by the member bodies voting.

International Standard ISO 657-1 was prepared by Technical Committee ISO/TC 17, *Steel.*

It cancels and replaces ISO Recommendation R 657-1 : 1968, of which it constitutes a technical revision.

ISO 657 consists of the following parts, under the general title *Hot-rolled steel sections*:

— *Part 1: Equal-leg angles — Dimensions*

— *Part 2: Unequal-leg angles — Dimensions*

— *Part 5: Equal-leg angles and unequal-leg angles — Tolerances for metric and inch series*

— *Part 6: Parallel flange sections (metric series) — Dimensions*

— *Part 10: Parallel flange sections — Tolerances*

— *Part 11: Sloping flange channel sections (metric series) — Dimensions and sectional properties*

— *Part 13: Tolerances on sloping flange beam, column and channel sections*

— *Part 15: Sloping flange beam sections (metric series) — Dimensions and sectional properties*

— *Part 16: Sloping flange column sections (metric series) — Dimensions and sectional properties*

— *Part 18: L sections for shipbuilding (metric series) — Dimensions, sectional properties and tolerances*

— *Part 19: Bulb flats (metric series) — Dimensions, sectional properties and tolerances*

— *Part 20: Parallel flange channel sections — Dimensions*

— *Part 21: T-sections with equal depth and flange width — Dimensions*

STANDARDSISO.COM : Click to view the full PDF of ISO 657-1:1989

© ISO 1989
All rights reserved. No part of this publication may be reproduced or utilized in any form or by any means, electronic or mechanical, including photocopying and microfilm, without permission in writing from the publisher.

International Organization for Standardization
Case postale 56 • CH-1211 Genève 20 • Switzerland
Printed in Switzerland

Hot-rolled steel sections —

Part 1 :
Equal-leg angles — Dimensions

STANDARDSISO.COM : Click to view the full PDF of ISO 657-1:1989

1 Scope

This part of ISO 657 specifies dimensions of hot-rolled equal-leg angles.

2 Normative reference

The following standard contains provisions which, through reference in this text, constitute provisions of this part of ISO 657. At the time of publication, the edition indicated was valid. All standards are subject to revision, and parties to agreements based on this part of ISO 657 are encouraged to investigate the possibility of applying the most recent edition of the standard indicated below. Members of IEC and ISO maintain registers of currently valid International Standards.

ISO 657-5 : 1976, *Hot-rolled steel sections — Part 5 : Equal-leg angles and unequal-leg angles — Tolerances for metric and inch series.*

3 Dimensions

3.1 The dimensions of equal-leg angles are given in table 1. Preferred dimensions are given in bold type.

3.2 The root radii given in table 1 are for information only.

3.3 The toe radius has not been specified and may, if considered necessary, be determined independently for national standards.

4 Sectional properties

The mass, sectional area and sectional properties of equal-leg angles are given for information in table 1. They have been calculated assuming a toe radius equal to half the root radius.

5 Dimensional tolerances

Tolerances on the dimensions specified in table 1 are covered in ISO 657-5.

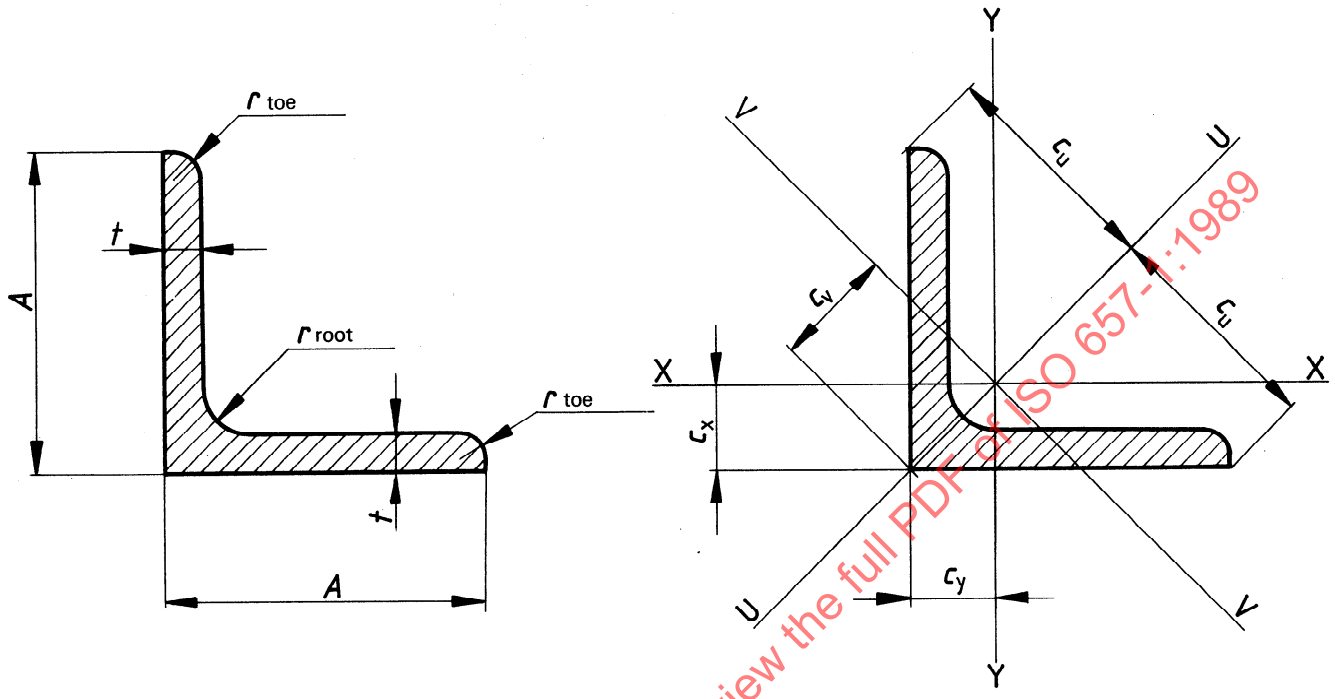

STANDARDSISO.COM : Click to view the full PDF of ISO 657-1:1989

Table 1 — Dimensions and sectional properties of hot-rolled equal-leg angles

Designation	Mass	Sectional area	Dimensions			Distances of centre of gravity			Sectional properties about axes							
									X-X = Y-Y			U-U		V-V		
			A	t	r_{root}	$c_x = c_y$	c_u	c_v	$I_x = I_y$	$r_x = r_y$	$Z_x = Z_y$	I_u	r_u	I_v	r_v	Z_v
	kg/m	cm²	mm	mm	mm	cm	cm	cm	cm⁴	cm	cm³	cm⁴	cm	cm⁴	cm	cm³
(1)	(2)	(3)	(4)	(5)	(6)	(7)	(8)	(9)	(10)	(11)	(12)	(13)	(14)	(15)	(16)	(17)
20 × 20 × 3	0,882	1,12	20	3	3,5	0,598	1,41	0,846	0,392	0,590	0,279	0,618	0,742	0,165	0,383	0,195
25 × 25 × 3	1,12	1,42	25	3	3,5	0,723	1,77	1,02	0,803	0,751	0,452	1,27	0,945	0,334	0,484	0,326
25 × 25 × 4	1,45	1,85	25	4	3,5	0,762	1,77	1,08	1,02	0,741	0,586	1,61	0,931	0,430	0,482	0,399
30 × 30 × 3	1,36	1,74	30	3	5	0,835	2,12	1,18	1,40	0,899	0,649	2,22	1,13	0,585	0,581	0,496
30 × 30 × 4	1,78	2,27	30	4	5	0,878	2,12	1,24	1,80	0,892	0,850	2,85	1,12	0,754	0,577	0,607
35 × 35 × 4	2,09	2,67	35	4	5	1,00	2,47	1,42	2,95	1,05	1,18	4,68	1,32	1,23	0,678	0,865
35 × 35 × 5	2,57	3,28	35	5	5	1,04	2,47	1,48	3,56	1,04	1,45	5,64	1,31	1,49	0,675	1,01
40 × 40 × 3	1,84	2,35	40	3	6	1,07	2,83	1,52	3,45	1,21	1,18	5,45	1,52	1,44	0,783	0,949
40 × 40 × 4	2,42	3,08	40	4	6	1,12	2,83	1,58	4,47	1,21	1,55	7,09	1,52	1,86	0,777	1,17
40 × 40 × 5	2,97	3,79	40	5	6	1,16	2,83	1,64	5,43	1,20	1,91	8,60	1,51	2,26	0,773	1,38

Table 1 — Dimensions and sectional properties of hot-rolled equal-leg angles *(continued)*

Designation	Mass	Sectional area	Dimensions			Distances of centre of gravity			Sectional properties about axes							
									X-X = Y-Y			U-U		V-V		
	kg/m	cm²	A mm	t mm	r_{root} mm	$c_x = c_y$ cm	c_u cm	c_v cm	$I_x = I_y$ cm⁴	$r_x = r_y$ cm	$Z_x = Z_y$ cm³	I_u cm⁴	r_u cm	I_v cm⁴	r_v cm	Z_v cm³
(1)	(2)	(3)	(4)	(5)	(6)	(7)	(8)	(9)	(10)	(11)	(12)	(13)	(14)	(15)	(16)	(17)
45 × 45 × 4	2,74	3,49	45	4	7	1,23	3,18	1,75	6,43	1,36	1,97	10,2	1,71	2,68	0,876	1,53
45 × 45 × 5	3,38	4,30	45	5	7	1,28	3,18	1,81	7,84	1,35	2,43	12,4	1,70	3,26	0,871	1,80
50 × 50 × 4	3,06	3,89	50	4	7	1,36	3,54	1,92	8,97	1,52	2,46	14,2	1,91	3,73	0,979	1,94
50 × 50 × 5	3,77	4,80	50	5	7	1,40	3,54	1,99	11,0	1,51	3,05	17,4	1,90	4,55	0,973	2,29
50 × 50 × 6	4,47	5,69	50	6	7	1,45	3,54	2,04	12,8	1,50	3,61	20,3	1,89	5,34	0,968	2,61
60 × 60 × 5	4,57	5,82	60	5	8	1,64	4,24	2,32	19,4	1,82	4,45	30,7	2,30	8,03	1,17	3,46
60 × 60 × 6	5,42	6,91	60	6	8	1,69	4,24	2,39	22,8	1,82	5,29	36,1	2,29	9,44	1,17	3,96
60 × 60 × 8	7,09	9,03	60	8	8	1,77	4,24	2,50	29,2	1,80	6,89	46,1	2,26	12,2	1,16	4,86
65 × 65 × 6	5,91	7,53	65	6	9	1,80	4,60	2,55	29,2	1,97	6,21	46,3	2,48	12,1	1,27	4,74
65 × 65 × 8	7,73	9,85	65	8	9	1,89	4,60	2,67	37,5	1,95	8,13	59,4	2,46	15,6	1,26	5,84
70 × 70 × 6	6,38	8,13	70	6	9	1,93	4,95	2,73	36,9	2,13	7,27	58,5	2,68	15,3	1,37	5,60
70 × 70 × 7	7,38	9,40	70	7	9	1,97	4,95	2,79	42,3	2,12	8,41	67,1	2,67	17,5	1,36	6,28
75 × 75 × 6	6,85	8,73	75	6	9	2,05	5,30	2,90	45,8	2,29	8,41	72,7	2,89	18,9	1,47	6,53
75 × 75 × 8	8,99	11,4	75	8	9	2,14	5,30	3,02	59,1	2,27	11,0	93,8	2,86	24,5	1,46	8,09
80 × 80 × 6	7,34	9,35	80	6	10	2,17	5,66	3,07	55,8	2,44	9,57	88,5	3,08	23,1	1,57	7,55
80 × 80 × 8	9,63	12,3	80	8	10	2,26	5,66	3,19	72,2	2,43	12,6	115	3,06	29,9	1,56	9,37
80 × 80 × 10	11,9	15,1	80	10	10	2,34	5,66	3,30	87,5	2,41	15,4	139	3,03	36,4	1,55	11,0
90 × 90 × 7	9,61	12,2	90	7	11	2,45	6,36	3,47	92,5	2,75	14,1	147	3,46	38,3	1,77	11,0
90 × 90 × 8	10,9	13,9	90	8	11	2,50	6,36	3,53	104	2,74	16,1	166	3,45	43,1	1,76	12,2
90 × 90 × 9	12,2	15,5	90	9	11	2,54	6,36	3,59	116	2,73	17,9	184	3,44	47,9	1,76	13,3
90 × 90 × 10	15,0	17,1	90	10	11	2,58	6,36	3,65	127	2,72	19,8	201	3,42	52,6	1,75	14,4
100 × 100 × 8	12,2	15,5	100	8	12	2,74	7,07	3,87	145	3,06	19,9	230	3,85	59,9	1,96	15,5
100 × 100 × 10	15,0	19,2	100	10	12	2,82	7,07	3,99	177	3,04	24,6	280	3,83	73,0	1,95	18,3
100 × 100 × 12	17,8	22,7	100	12	12	2,90	7,07	4,11	207	3,02	29,1	328	3,80	85,7	1,94	20,9
120 × 120 × 8	14,7	18,7	120	8	13	3,23	8,49	4,56	255	3,69	29,1	405	4,65	105	2,37	23,1
120 × 120 × 10	18,2	23,2	120	10	13	3,31	8,49	4,69	313	3,67	36,0	497	4,63	129	2,36	27,5
120 × 120 × 12	21,6	27,5	120	12	13	3,40	8,49	4,80	368	3,65	42,7	584	4,60	152	2,35	31,6
125 × 125 × 8	15,3	19,5	125	8	13	3,35	8,84	4,74	290	3,85	31,7	461	4,85	120	2,47	25,3
125 × 125 × 10	19,0	24,2	125	10	13	3,44	8,84	4,86	356	3,84	39,3	565	4,83	146	2,46	30,1
125 × 125 × 12	22,6	28,7	125	12	13	3,52	8,84	4,98	418	3,81	46,6	664	4,81	172	2,45	34,6
150 × 150 × 10	23,0	29,3	150	10	16	4,03	10,6	5,71	624	4,62	56,9	990	5,82	258	2,97	45,1
150 × 150 × 12	27,3	34,8	150	12	16	4,12	10,6	5,83	737	4,60	67,7	1 170	5,80	303	2,95	52,0
150 × 150 × 15	33,8	43,0	150	15	16	4,25	10,6	6,01	898	4,57	83,5	1 430	5,76	370	2,93	61,6
180 × 180 × 15	40,9	52,1	180	15	18	4,98	12,7	7,05	1 590	5,52	122	2 520	6,96	653	3,54	92,7
180 × 180 × 18	48,6	61,9	180	18	18	5,10	12,7	7,22	1 870	5,49	145	2 960	6,92	768	3,52	106

STANDARDSISO.COM : Click to view the full PDF of ISO 657-1:1989

Table 1 — Dimensions and sectional properties of hot-rolled equal-leg angles (*concluded*)

Designation	Mass	Sectional area	Dimensions			Distances of centre of gravity			Sectional properties about axes							
									X-X = Y-Y			U-U		V-V		
			A	t	r_{root}	$c_x = c_y$	c_u	c_v	$I_x = I_y$	$r_x = r_y$	$Z_x = Z_y$	I_u	r_u	I_v	r_v	Z_v
	kg/m	cm²	mm	mm	mm	cm	cm	cm	cm⁴	cm	cm³	cm⁴	cm	cm⁴	cm	cm³
(1)	(2)	(3)	(4)	(5)	(6)	(7)	(8)	(9)	(10)	(11)	(12)	(13)	(14)	(15)	(16)	(17)
200 × 200 × 16	48,5	61,8	200	16	18	5,52	14,1	7,81	2 340	6,16	162	3 720	7,76	960	3,94	123
200 × 200 × 20	59,9	76,3	200	20	18	5,68	14,1	8,04	2 850	6,11	199	4 530	7,70	1 170	3,92	146
200 × 200 × 24	71,1	90,6	200	24	18	5,84	14,1	8,26	3 330	6,06	235	5 280	7,64	1 380	3,90	167
250 × 250 × 28	104	133	250	28	18	7,24	17,7	10,2	7 700	7,62	433	12 200	9,61	3 170	4,89	309
250 × 250 × 35	128	163	250	35	18	7,50	17,7	10,6	9 260	7,54	529	14 700	9,48	3 860	4,87	364

NOTES

1 Member countries may choose, to be included in their national standards, the sizes which are required to meet their demand.

For the angles so chosen, only thicknesses which can be rolled in their mills to meet the demand of the users may be selected from the list of thicknesses corresponding to equal angles in table 1.

2 The sectional area has been calculated using the formula

$$S = [t(2A - t) + 0{,}214\,6\,(r_{root}^2 - 2r_{toe}^2)] \times \frac{1}{100}$$

where

S is the sectional area, in square centimetres;

t is the thickness, in millimetres;

r_{root} is the root radius, in millimetres;

r_{toe} is the toe radius, in millimetres;

A is the leg length, in millimetres.

3 Mass is calculated on the basis of density of steel of 7,85 kg/dm³.

STANDARDSISO.COM : Click to view the full PDF of ISO 657-1:1989