INTERNATIONAL STANDARD

ISO 7240-12

Third edition
2022-06

Fire detection and alarm systems —

Part 12: Line type smoke detectors using a transmitted optical beam

Systèmes de détection d'incendie et d'alarme —

Partie 12: Détecteurs linéaires de fumée utilisant une transmission par faisceaux lumineux

STANDARDSISO.COM : Click to view the full PDF of ISO 7240-12:2022

Reference number
ISO 7240-12:2022(E)

© ISO 2022

STANDARDSISO.COM : Click to view the full PDF of ISO 7240-12:2022

COPYRIGHT PROTECTED DOCUMENT

© ISO 2022

All rights reserved. Unless otherwise specified, or required in the context of its implementation, no part of this publication may be reproduced or utilized otherwise in any form or by any means, electronic or mechanical, including photocopying, or posting on the internet or an intranet, without prior written permission. Permission can be requested from either ISO at the address below or ISO's member body in the country of the requester.

ISO copyright office
CP 401 • Ch. de Blandonnet 8
CH-1214 Vernier, Geneva
Phone: +41 22 749 01 11
Email: copyright@iso.org
Website: www.iso.org

Published in Switzerland

© ISO 2022 – All rights reserved

Contents

Page

Foreword ... **vi**
Introduction ... **vii**
1 Scope ... **1**
2 Normative references ... **1**
3 Terms and definitions ... **2**
4 Requirements ... **3**
4.1 Conformance ... 3
4.2 Individual alarm indication ... 3
4.3 Connection of ancillary devices ... 4
4.4 Monitoring of detachable detectors and connections ... 4
4.5 Manufacturer's adjustments ... 4
4.6 On-site adjustment of response threshold value ... 4
4.7 Protection of optical components ... 4
4.8 Limit of compensation ... 4
4.9 Fault signalling ... 5
4.10 Software-controlled detectors ... 5
4.10.1 General ... 5
4.10.2 Software documentation ... 5
4.10.3 Software design ... 6
4.10.4 Storage of programs and data ... 6
5 Test methods ... **6**
5.1 General ... 6
5.1.1 Atmospheric conditions for tests ... 6
5.1.2 Mounting arrangements ... 6
5.1.3 Operating conditions for tests ... 6
5.1.4 Tolerances ... 7
5.1.5 Measurement of response value ... 7
5.1.6 Provision for tests ... 8
5.1.7 Test schedule ... 8
5.1.8 Test report ... 9
5.2 Reproducibility ... 9
5.2.1 Object of test ... 9
5.2.2 Test procedure ... 9
5.2.3 Requirements ... 9
5.3 Repeatability ... 9
5.3.1 Object of test ... 9
5.3.2 Test procedure ... 9
5.3.3 Requirements ... 10
5.4 Alignment dependence ... 10
5.4.1 Object of test ... 10
5.4.2 Test procedure ... 10
5.4.3 Requirements ... 11
5.5 Variation of supply parameters ... 11
5.5.1 Object ... 11
5.5.2 Test procedure ... 11
5.5.3 Requirements ... 11
5.6 Rapid changes in attenuation ... 11
5.6.1 Object of test ... 11
5.6.2 Test procedure ... 11
5.6.3 Requirements ... 12
5.7 Slow changes in attenuation ... 12
5.7.1 Object of test ... 12

STANDARDSISO.COM : Click to view the full PDF of ISO 7240-12:2022

© ISO 2022 – All rights reserved

5.7.2 Test procedure ... 12
5.7.3 Requirements ... 12
5.8 Optical path length dependence ... 13
5.8.1 Object of test ... 13
5.8.2 Test procedure ... 13
5.8.3 Requirements ... 13
5.9 Fire sensitivity ... 13
5.9.1 Object of test ... 13
5.9.2 Test procedure ... 13
5.9.3 Requirements ... 15
5.10 Stray light ... 15
5.10.1 Object of test ... 15
5.10.2 Test procedure ... 15
5.10.3 Requirements ... 16
5.11 Dry heat (operational) ... 16
5.11.1 Object of test ... 16
5.11.2 Test procedure ... 16
5.11.3 Requirements ... 17
5.12 Cold (operational) ... 17
5.12.1 Object of test ... 17
5.12.2 Test procedure ... 17
5.12.3 Requirements ... 18
5.13 Damp heat, steady-state (operational) ... 18
5.13.1 Object of the test ... 18
5.13.2 Test procedure ... 18
5.13.3 Requirements ... 19
5.14 Damp heat, steady-state (endurance) ... 19
5.14.1 Object of test ... 19
5.14.2 Test procedure ... 19
5.14.3 Requirements ... 20
5.15 Vibration, sinusoidal (endurance) ... 20
5.15.1 Object of test ... 20
5.15.2 Test procedure ... 20
5.15.3 Requirements ... 21
5.16 Electromagnetic compatibility (EMC), immunity tests (operational) ... 21
5.17 Sulfur dioxide, SO_2, corrosion (endurance) ... 22
5.17.1 Object of test ... 22
5.17.2 Test procedure ... 22
5.17.3 Requirements ... 22
5.18 Impact (operational) ... 23
5.18.1 Object of test ... 23
5.18.2 Test procedure ... 23
5.18.3 Requirements ... 23

6 Test report ... 24

7 Mrking ... 24

8 Data ... 25

Annex A (informative) **Compensation for detector drift ... 26**

Annex B (normative) **Bench for response threshold value measurements ... 31**

Annex C (normative) **Fire test room ... 33**

Annex D (normative) **Smouldering pyrolysis wood fire (TF2) ... 35**

Annex E (normative) **Glowing smouldering cotton fire (TF3) ... 38**

Annex F (normative) **Flaming plastics (polyurethane) fire (TF4) ... 41**

Annex G (normative) **Flaming liquid (*n*-heptane) fire (TF5) ... 43**

STANDARDSISO.COM : Click to view the full PDF of ISO 7240-12:2022

© ISO 2022 – All rights reserved

Annex H (normative) **Smoke-measuring instruments** **45**
Annex I (normative) **Apparatus for stray light** **48**
Annex J (informative) **Information concerning the construction of the measuring ionization chamber** **50**
Bibliography **53**

STANDARDSISO.COM : Click to view the full PDF of ISO 7240-12:2022

© ISO 2022 – All rights reserved

Foreword

ISO (the International Organization for Standardization) is a worldwide federation of national standards bodies (ISO member bodies). The work of preparing International Standards is normally carried out through ISO technical committees. Each member body interested in a subject for which a technical committee has been established has the right to be represented on that committee. International organizations, governmental and non-governmental, in liaison with ISO, also take part in the work. ISO collaborates closely with the International Electrotechnical Commission (IEC) on all matters of electrotechnical standardization.

The procedures used to develop this document and those intended for its further maintenance are described in the ISO/IEC Directives, Part 1. In particular, the different approval criteria needed for the different types of ISO documents should be noted. This document was drafted in accordance with the editorial rules of the ISO/IEC Directives, Part 2 (see www.iso.org/directives).

Attention is drawn to the possibility that some of the elements of this document may be the subject of patent rights. ISO shall not be held responsible for identifying any or all such patent rights. Details of any patent rights identified during the development of the document will be in the Introduction and/or on the ISO list of patent declarations received (see www.iso.org/patents).

Any trade name used in this document is information given for the convenience of users and does not constitute an endorsement.

For an explanation of the voluntary nature of standards, the meaning of ISO specific terms and expressions related to conformity assessment, as well as information about ISO's adherence to the World Trade Organization (WTO) principles in the Technical Barriers to Trade (TBT), see www.iso.org/iso/foreword.html.

This document was prepared by Technical Committee ISO/TC 21, *Equipment for fire protection and fire fighting*, Subcommittee SC 3, *Fire detection and alarm systems.*

This third edition cancels and replaces the second edition (ISO 7240-12:2014), which has been technically revised.

The main changes are as follows:

— references to EN 50130-4 have been replaced with references to IEC 62599-2 (electromagnetic compatibility immunity test);

— uniform acceptance criteria has been adopted for all line-type smoke detectors;

— editorial corrections have been made to bring the document in line with current ISO drafting rules.

A list of all parts in the ISO 7240 series can be found on the ISO website.

Any feedback or questions on this document should be directed to the user's national standards body. A complete listing of these bodies can be found at www.iso.org/members.html.

STANDARDSISO.COM : Click to view the full PDF of ISO 7240-12:2022

© ISO 2022 – All rights reserved

Introduction

A fire detection and alarm system is required to function satisfactorily not only in the event of fire, but also during and after exposure to conditions likely to be met in practice, including corrosion, vibration, direct impact, indirect shock and electromagnetic interference. Specific tests are intended to assess the performance of the smoke detectors under such conditions.

This document is not intended to place any other restrictions on the design and construction of such detectors.

STANDARDSISO.COM : Click to view the full PDF of ISO 7240-12:2022

© ISO 2022 – All rights reserved

STANDARDSISO.COM : Click to view the full PDF of ISO 7240-12:2022

Fire detection and alarm systems —

Part 12: Line type smoke detectors using a transmitted optical beam

1 Scope

This document specifies requirements, test methods and performance criteria for line-type smoke detectors for use in fire detection systems installed in buildings. The detectors consist of at least a transmitter and a receiver and can include reflector(s) for the detection of smoke by the attenuation and/or changes in attenuation of an optical beam.

This document is not applicable to:

— line-type smoke detectors designed to operate with separations between opposed components of less than 1 m;

— line-type smoke detectors whose optical path length is defined or adjusted by an integral mechanical connection;

— line-type smoke detectors with special characteristics, which cannot be assessed by the test methods in this document.

NOTE The term "optical" is used to describe that part of the electromagnetic spectrum produced by the transmitter to which the receiver is responsive; this is not restricted to visible wavelengths.

2 Normative references

The following documents are referred to in the text in such a way that some or all of their content constitutes requirements of this document. For dated references, only the edition cited applies. For undated references, the latest edition of the referenced document (including any amendments) applies.

ISO 7240-1, *Fire detection and alarm systems — Part 1: General and definitions*

IEC 60064, *Tungsten filament lamps for domestic and similar general lighting purposes — Performance requirements*

IEC 60068-1, *Environmental testing — Part 1: General and guidance*

IEC 60068-2-1:2007, *Environmental testing — Part 2-1: Tests. Tests A: Cold*

IEC 60068-2-2:2007, *Environmental testing — Part 2-2: Tests. Tests B: Dry heat*

IEC 60068-2-6:2007, *Environmental testing — Part 2-6: Tests. Test Fc: Vibration (sinusoidal)*

IEC 60068-2-42:2003, *Environmental testing — Part 2-42: Tests. Test Kc: Sulphur dioxide test for contacts and connections*

IEC 60068-2-75:2014, *Environmental testing — Part 2-75: Tests Eh: Hammer test*

IEC 60068-2-78:2012, *Environmental testing — Part 2-78: Tests. Test Cab: Damp heat, steady state*

IEC 60081, *Double-capped fluorescent lamps — Performance specifications*

STANDARDSISO.COM : Click to view the full PDF of ISO 7240-12:2022

© ISO 2022 – All rights reserved

IEC 62599-2, *Alarm systems – Part 2: Electromagnetic compatibility – Immunity requirements for components of fire and security alarm systems*

3 Terms and definitions

For the purposes of this document, the terms and definitions given in ISO 7240-1 and the following apply.

ISO and IEC maintain terminology databases for use in standardization at the following addresses:

— ISO Online browsing platform: available at https://www.iso.org/obp

— IEC Electropedia: available at https://www.electropedia.org/

3.1
attenuation
A
reduction in intensity of the optical beam at the receiver, defined by the formula:

$$A = 10\log_{10}\left(\frac{I_0}{I}\right)$$

where

I_0 is the received intensity without reduction in intensity;

I is the received intensity after reduction in intensity.

Note 1 to entry: The attenuation is expressed in units of decibels (dB).

3.2
opposed component
component [transmitter and receiver or transmitter-receiver and reflector(s)] of the detector whose position determines the optical path

3.3
optical path length
total distance traversed by the optical beam between the transmitter and the receiver

3.4
receiver
component that receives the optical beam

3.5
response threshold value
C
value of attenuation at which an alarm signal is generated, calculated using the formula:

$$C = F \times \left(\frac{n_f}{n_v}\right)$$

where

F is the value of attenuation resulting from a beam passing once through a filter, given by the formula $10\log_{10}\left(\frac{I_0}{I}\right)$;

I_0 is the received intensity of the optical beam without reduction through an attenuating filter;

STANDARDSISO.COM : Click to view the full PDF of ISO 7240-12:2022

© ISO 2022 – All rights reserved

I is the received intensity of the optical beam after passing once through an attenuating filter;

n_f is the number of times the beam passes through the filter;

n_v is the number of times the beam passes through the measured volume.

Note 1 to entry: The attenuation is expressed in units of decibels (dB).

Note 2 to entry: The inclusion of $\left(\frac{n_f}{n_v}\right)$ means that the value of C recorded for a multi–pass arrangement tested by obscuring the beam only once (at the receiver, as recommended in B.1.2) is consistent with a single pass (end-to-end) arrangement.

3.6
adjustment of response threshold value
any adjustment during or after commissioning which leads to a change in the response to fire

3.7
separation
physical distance between the opposed components

3.8
transmitter
component from which the optical beam emanates

4 Requirements

4.1 Conformance

In order to conform to this document, the detector shall meet the requirements laid out in the following clauses:

a) Clause 4, which shall be verified by visual inspection or engineering assessment, shall be tested in accordance with Clause 5 and shall meet the requirements of the tests.

b) Clauses 7 and 8, which shall be verified by visual inspection.

4.2 Individual alarm indication

4.2.1 Each detector shall be provided with an integral red visual indicator by which the individual detector releasing an alarm can be identified, until the alarm condition is reset. Where other conditions of the detector can be visually indicated, these shall be clearly distinguishable from the alarm indication, except when the detector is switched into a service mode. For detachable detectors, the indicator may be integral with the base or the detector head.

4.2.2 The visual indicator shall be visible from a distance of 6 m in an ambient light intensity up to 500 lx at an angle up to:

a) 5° from the vertical axis of the detector when viewed from beneath the detector in any direction; and

b) 45° from the vertical axis of the detector when viewed from beneath the detector in at least one direction.

STANDARDSISO.COM : Click to view the full PDF of ISO 7240-12:2022

© ISO 2022 – All rights reserved

4.3 Connection of ancillary devices

The detector may provide for connections to ancillary devices (remote indicators, control relays, etc.), but open- or short-circuit failures of these connections shall not prevent the correct operation of the detector.

4.4 Monitoring of detachable detectors and connections

4.4.1 For detachable detectors, a means shall be provided for a remote monitoring system (e.g. the control and indicating equipment) to detect the removal of the head from the base, in order to give a fault signal.

4.4.2 If there are cables connecting separate parts of the detector, then a means shall be provided for a remote monitoring system (e.g. the fire detection control and indicating equipment) to detect a short or open circuit on those cables, in order to give a fault signal.

4.4.3 If more than one detector can be connected to the transmission path of a remote monitoring system (e.g. control and indicating equipment), the removal of a head from the base shall not prevent an alarm signal from another detector connected to the same transmission path.

4.5 Manufacturer's adjustments

It shall not be possible to change the manufacturer's settings except by special means (e.g. the use of a special code or tool) or by breaking or removing a seal.

4.6 On-site adjustment of response threshold value

4.6.1 If there is provision for on-site adjustment of the response threshold value of the detector then:

a) for all of the settings at which the manufacturer claims conformance, the detector shall conform to the requirements of this document and access to the adjustment means shall be possible only by the use of a code or special tool or by removing the detector from its base or mounting;

b) any setting or settings at which the manufacturer does not claim conformance to this document shall be accessible only by the use of a code or special tool, and it shall be clearly marked on the detector or in the associated data that if this setting or these settings are used, the detector does not conform to this document.

4.6.2 These adjustments may be carried out at the detector or at the fire detection control and indicating equipment.

4.7 Protection of optical components

The detector shall be so designed that a sphere of diameter greater than (1,3 ± 0,05) mm cannot pass into any enclosure containing optical components when the detector is in the operational condition.

NOTE This requirement is intended to restrict the access of insects into the sensitive parts of the detector. It is known that this requirement is not sufficient to prevent the access of all insects, therefore, it can be necessary to take other precautions against unwanted alarms due to the entry of small insects.

4.8 Limit of compensation

4.8.1 Compensation may be used to mitigate changes in sensitivity due to the build-up of dust and other contaminants on the optical surfaces (see Annex A).

STANDARDSISO.COM : Click to view the full PDF of ISO 7240-12:2022

© ISO 2022 – All rights reserved

4.8.2 The detector shall emit either a fault or alarm signal at the limit of compensation for the effect of a slowly changing signal response.

4.8.3 Since it is practically impossible to perform tests with very slight increases in attenuation, an evaluation of the detector's conformity shall be made by analysing the circuits/software and/or by physical tests and simulations.

4.9 Fault signalling

A fire alarm signal shall not be cancelled by a fault resulting from a rapid change in obscuration (in accordance with 5.6) or by a result of the limit of compensation being reached (in accordance with 4.8).

4.10 Software-controlled detectors

4.10.1 General

The requirements of 4.10.2, 4.10.3 and 4.10.4 shall be met for detectors that rely on software control in order to fulfil the requirements of this document.

4.10.2 Software documentation

4.10.2.1 The manufacturer shall prepare documentation that gives an overview of the software design. This documentation shall be in sufficient detail for the design to be inspected for conformance to this document and shall include at least the following:

a) functional description of the main program flow (e.g. as a flow diagram or structogram), including:

   1) a brief description of the modules and the functions that they perform,

   2) the way in which the modules interact,

   3) the overall hierarchy of the program,

   4) the way in which the software interacts with the hardware of the detector,

   5) the way in which the modules are called, including any interrupt processing;

b) description of those areas of memory used for the various purposes (e.g. the program, site-specific data and running data);

c) designation by which the software and its version can be uniquely identified.

4.10.2.2 The manufacturer shall prepare and maintain detailed design documentation. This shall be available for inspection in a manner that respects the manufacturers' rights for confidentiality. It shall comprise at least the following:

a) overview of the whole system configuration, including all software and hardware components;

b) description of each module of the program, containing at least:

   1) the name of the module,

   2) a description of the tasks performed,

   3) a description of the interfaces, including the type of data transfer, the valid data range and the checking for valid data;

c) full source code listings, as a hard copy or in machine-readable form [e.g. American Standard Code for Information Interchange (ASCII) code], including all global and local variables, constants and labels used, and sufficient comments for the program flow to be recognized;

STANDARDSISO.COM : Click to view the full PDF of ISO 7240-12:2022

d) details of any software tools used in the design and implementation phase, e.g. computer-aided software engineering (CASE) tools, compilers, etc.

NOTE This detailed design documentation can be reviewed at the manufacturers' premises.

4.10.3 Software design

In order to ensure the reliability of the detector, the following requirements for software design apply:

a) the software shall have a modular structure;

b) the design of the interfaces for manually and automatically generated data shall not permit invalid data to cause errors in the program operation;

c) the software shall be designed to avoid the occurrence of deadlock of the program flow.

4.10.4 Storage of programs and data

4.10.4.1 The program necessary to conform to this document and any preset data, such as manufacturer's settings, shall be held in non-volatile memory. Writing to areas of memory containing this program and data shall be possible only by the use of some special tool or code and shall not be possible during normal operation of the detector.

4.10.4.2 Site-specific data shall be held in memory which will retain data for at least two weeks without external power to the detector, unless provision is made for the automatic renewal of such data, following loss of power, within 1 h of power being restored.

STANDARDSISO.COM : Click to view the full PDF of ISO 7240-12:2022

5 Test methods

5.1 General

5.1.1 Atmospheric conditions for tests

5.1.1.1 Unless otherwise stated in a test procedure, carry out the testing after the test specimen has been allowed to stabilize in the standard atmospheric conditions for testing as specified in IEC 60068-1:2013 as follows:

— temperature: (15 to 35) °C;

— relative humidity: (25 to 75) %;

— air pressure: (86 to 106) kPa.

5.1.1.2 The temperature and humidity shall be substantially constant for each environmental test where the standard atmospheric conditions are applied.

5.1.2 Mounting arrangements

Mount the specimen by its normal means of attachment in accordance with the manufacturer's instructions. If these instructions describe more than one method of mounting, then the method considered to be most unfavourable for each test shall be chosen.

5.1.3 Operating conditions for tests

5.1.3.1 If a test method requires a specimen to be operational, then connect the specimen to suitable supply and monitoring equipment having the characteristics required by the manufacturer's data.

 © ISO 2022 – All rights reserved

Unless otherwise specified in the test method, set the supply parameters applied to the specimen within the manufacturer's specified range(s) and maintain them substantially constant throughout the tests. The value chosen for each parameter shall normally be the nominal value, or the mean of the specified range. If a test procedure requires a specimen to be monitored to detect any alarm or fault signals, then connect the specimen to any necessary ancillary devices (e.g. through wiring to an end-of-line device for non-addressable detectors) to allow a fault signal to be recognized.

5.1.3.2 The details of the supply and monitoring equipment and the alarm criteria used shall be given in the test report (Clause 6).

5.1.4 Tolerances

5.1.4.1 Unless otherwise stated, the tolerances for the environmental test parameters shall be as given in the basic reference standards for the test (e.g. the relevant part of the IEC 60068 series).

5.1.4.2 If a specific tolerance or deviation limit is not specified in a requirement or test procedure, then a tolerance of ±5 % shall be applied.

5.1.5 Measurement of response value

5.1.5.1 General

5.1.5.1.1 Install the specimen for which the response threshold value is to be measured on the measuring bench, conforming to Annex B, in its normal operating position and by its normal means of attachment in accordance with 5.1.2.

5.1.5.1.2 Connect the specimen to its supply and monitoring equipment in accordance with 5.1.3, and allow it to stabilize for at least 15 min.

5.1.5.2 Operating conditions

5.1.5.2.1 Assemble the receiver on a rigid support at a longitudinal distance of at least 500 mm from the transmitter or the transmitter-receiver at the same distance from the reflector in accordance with Figure B.1.

5.1.5.2.2 In the case of opposed components with a separate transmitter and receiver, place a filter holder as close as possible to the front of the receiver.

5.1.5.2.3 Adjust the filter holder so that the whole beam passes through the filter. Use the filter holder to mount the filters used during the measurement of the response threshold value.

5.1.5.2.4 The height, *h*, separating the axis of the optical beam above the support shall be 10 times the diameter (or the vertical dimension) of the optical system of the receiver.

5.1.5.2.5 Carry out adjustment for path length or alignment, if required, in accordance with the manufacturer's instructions.

5.1.5.2.6 Unless otherwise stated in a test procedure, measure the response threshold value with the maximum separation or a simulated maximum separation carried out using means agreed by the manufacturer.

STANDARDSISO.COM : Click to view the full PDF of ISO 7240-12:2022

© ISO 2022 – All rights reserved

5.1.5.3 Measurements

5.1.5.3.1 The response threshold value is determined by the value of the lowest value test filter required to give an alarm within 30 s after introduction in the beam. The minimum resolution for optical density filters shall be in accordance with Table B.1.

5.1.5.3.2 Record the response threshold value as *C*.

5.1.6 Provision for tests

5.1.6.1 Provide the following for testing conformance with this document:

a) seven detectors;

b) data specified in Clause 8.

5.1.6.2 The specimens submitted shall be representative of the manufacturer's normal production with regard to their construction and calibration. This implies that the mean response threshold value of the seven specimens found in the reproducibility test should also represent the production mean, and that the limits specified in the reproducibility test should also be applicable to the manufacturer's production.

5.1.7 Test schedule

Test the specimens in accordance with the test schedule in Table 1. After the reproducibility test, number the two least sensitive specimens (i.e. those with the highest response thresholds) 6 and 7 and the others 1 to 5 arbitrarily.

Table 1 — Test schedule

Test	Subclause	Specimen No.(s)
Reproducibility	5.2	all specimens
Repeatability	5.3	2
Alignment dependence	5.4	1
Variation of supply parameters	5.5	1
Rapid changes in attenuation	5.6	1
Slow changes in attenuation	5.7	1
Optical path length dependence	5.8	1
Fire sensitivity	5.9	6 and 7
Stray light	5.10	6
Dry heat (operational)	5.11	3
Cold (operational)	5.12	3
Damp heat, steady-state (operational)	5.13	2
Damp heat, steady-state (endurance)	5.14	2
Vibration (endurance)	5.15	7
Electrostatic discharge (operational)	5.16	4[a]
Radiated electromagnetic fields (operational)	5.16	6[a]
Conducted disturbances induced by electromagnetic fields (operational)	5.16	6[a]

[a] In the interests of test economy, it is permitted to use the same specimen for more than one EMC test. In that case, intermediate functional test(s) on the specimen(s) used for more than one test may be deleted, and the functional test conducted at the end of the sequence of tests. However, it should be noted that in the event of a failure, it can be not possible to identify which test exposure caused the failure.

STANDARDSISO.COM : Click to view the full PDF of ISO 7240-12:2022

© ISO 2022 – All rights reserved

Table 1 *(continued)*

Test	Subclause	Specimen No.(s)
Fast transient bursts (operational)	5.16	4[a]
Slow high-energy voltage surges (operational)	5.16	6[a]
Sulfur dioxide, SO_2, corrosion (endurance)	5.17	5
Impact (operational)	5.18	1

[a] In the interests of test economy, it is permitted to use the same specimen for more than one EMC test. In that case, intermediate functional test(s) on the specimen(s) used for more than one test may be deleted, and the functional test conducted at the end of the sequence of tests. However, it should be noted that in the event of a failure, it can be not possible to identify which test exposure caused the failure.

5.1.8 Test report

The test results shall be reported in accordance with Clause 6.

5.2 Reproducibility

5.2.1 Object of test

To demonstrate that the sensitivity of the detector does not vary unduly from specimen to specimen.

5.2.2 Test procedure

5.2.2.1 Adjust the specimens to the maximum sensitivity.

5.2.2.2 Measure the response threshold value of each of the specimens in accordance with 5.1.5.

5.2.2.3 Calculate the mean of these response threshold values which shall be designated $\bar{C}$.

5.2.2.4 Designate the maximum response threshold value as C_{max} and the minimum value as C_{min}.

5.2.3 Requirements

5.2.3.1 C_{min} shall not be less than 0,4 dB.

5.2.3.2 The ratio of the response threshold values C_{max}: $\bar{C}$ shall not be greater than 1,33 and the ratio of the response threshold values $\bar{C}$:C_{min} shall not be greater than 1,5.

5.3 Repeatability

5.3.1 Object of test

To demonstrate that the detector has stable behaviour with respect to its sensitivity even after a number of alarm conditions.

5.3.2 Test procedure

5.3.2.1 Adjust the specimen to the maximum sensitivity.

5.3.2.2 Mount the specimen in accordance with 5.1.2 and connect it to supply and monitoring equipment in accordance with 5.1.3.

STANDARDSISO.COM : Click to view the full PDF of ISO 7240-12:2022

© ISO 2022 – All rights reserved

5.3.2.3 Measure the response threshold value of the specimen to be tested three times in accordance with 5.1.5. The period between successive determinations shall not be less than 15 min or more than 1 h.

5.3.2.4 Power the specimen without interruption or disturbance to the optical beam, for 3 d.

5.3.2.5 Measure the response threshold value of the specimen once, in accordance with 5.1.5.

5.3.2.6 Designate the maximum response threshold value C_{max} and the minimum value C_{min}.

5.3.3 Requirements

5.3.3.1 No alarm or fault signals shall be emitted during the 3 d between testing.

5.3.3.2 C_{min} shall not be less than 0,4 dB.

5.3.3.3 The ratio of the response threshold values C_{max}:C_{min} shall not be greater than 1,6.

5.4 Alignment dependence

5.4.1 Object of test

To demonstrate that the angular inaccuracies in alignment (within the maximum stated by the manufacturer) of the detector resulting from installation and/or movement in the structure of a building, do not affect the operation of the detector.

5.4.2 Test procedure

5.4.2.1 With the agreement of the manufacturer, this test may be carried out outside of the limits of the standard atmospheric conditions of 5.1.1.

5.4.2.2 Adjust the specimen to the maximum sensitivity.

5.4.2.3 Mount the specimen in accordance with 5.1.2 and connect it to supply and monitoring equipment in accordance with 5.1.3.

5.4.2.4 Subject each opposed component to the following procedures while holding the other component stationary.

a) Rotate the component in a clockwise direction about a vertical axis at a rate of (0,3 ± 0,05)°/min up to the maximum angular misalignment declared by the manufacturer in accordance with 8.2 a). After 2 min in this position, place a filter of value 6 dB in the optical path.

b) Remove the filter, reset the detector and continue the rotation until a fault or alarm signal is emitted.

c) Return the rotated component to its original position, reset the detector and allow it to stabilize.

d) Repeat the procedure described in a), b) and c) but rotate the component in a counter-clockwise direction.

e) Repeat the procedures described in a), b), c) and d) but rotate the component about a horizontal axis normal to the beam.

STANDARDSISO.COM : Click to view the full PDF of ISO 7240-12:2022

 © ISO 2022 – All rights reserved

5.4.3 Requirements

5.4.3.1 The specimen shall not emit a fault or an alarm signal while being rotated in the directions specified within the angular tolerances stated by the manufacturer [see 8.2 a)].

5.4.3.2 The specimen shall emit an alarm signal no more than 30 s after the total introduction of the filter specified in 5.4.2.2.

5.4.3.3 Record the smallest angle at which a fault or alarm signal is emitted when the component is rotated beyond the maximum angle declared by the manufacturer in accordance with 8.2 a).

5.5 Variation of supply parameters

5.5.1 Object

To demonstrate that, within the specified range(s) of the supply parameters (e.g. voltage), the sensitivity of the detector is not unduly dependent on those parameters.

5.5.2 Test procedure

5.5.2.1 Adjust the specimen to the maximum sensitivity.

5.5.2.2 Mount the specimen in accordance with 5.1.2 and connect it to supply and monitoring equipment in accordance with 5.1.3.

5.5.2.3 Measure the response threshold value of the specimen in accordance with 5.1.5 at the upper and lower limits of the supply parameter (e.g. voltage) range(s) specified by the manufacturer.

5.5.2.4 Designate the maximum response threshold value as C_{max} and the minimum value as C_{min}.

5.5.2.5 For some detectors, the only relevant supply parameter may be the DC voltage applied to the detector. For other types of detectors (e.g. analogue-addressable), signal levels and timing may need to be considered. If necessary, the manufacturer may be requested to provide suitable supply equipment to allow the supply parameters to be changed as required.

5.5.3 Requirements

5.5.3.1 C_{min} shall not be less than 0,4 dB.

5.5.3.2 The ratio of the response threshold values C_{max}:C_{min} shall not be greater than 1,6.

5.6 Rapid changes in attenuation

5.6.1 Object of test

To demonstrate that the detector produces alarm or fault signals, within an acceptable time, after a sudden, large and sustained increase in beam attenuation.

5.6.2 Test procedure

5.6.2.1 Adjust the specimen to the minimum sensitivity.

STANDARDSISO.COM : Click to view the full PDF of ISO 7240-12:2022

5.6.2.2 Mount the specimen in accordance with 5.1.2 and connect it to supply and monitoring equipment in accordance with 5.1.3.

5.6.2.3 Use the following attenuators:

a) attenuator A: 6 dB,

b) attenuator B: 10^{+3}_{0} dB

5.6.2.4 Place attenuator A in the optical path. The time to place attenuator A in the optical path shall not exceed 1 s. Keep attenuator A in place for 40 s.

5.6.2.5 Remove attenuator A, reset the detector and place attenuator B in the optical path. The time to place attenuator B in the optical path shall not exceed 1 s. Keep attenuator B in place for 70 s.

5.6.3 Requirements

5.6.3.1 The specimen shall emit an alarm signal not more than 30 s after the total introduction of attenuator A between the components.

5.6.3.2 The specimen shall emit a fault or alarm signal not more than 60 s after the total introduction of attenuator B between the components.

5.7 Slow changes in attenuation

5.7.1 Object of test

To demonstrate that the detector can detect a slowly developing fire, despite the provision of any compensation for the effects of contamination of the optical components.

5.7.2 Test procedure

5.7.2.1 Adjust the specimen to the maximum sensitivity.

5.7.2.2 Mount the specimen in accordance with 5.1.2 and connect it to supply and monitoring equipment in accordance with 5.1.3.

5.7.2.3 Measure the response threshold value of the specimen in accordance with 5.1.5 but change the attenuator either continuously or in steps with the minimum attenuator resolution in accordance with Table B.1, with an average rate of $\bar{C}$ /4 dB/h where $\bar{C}$ is the average response threshold values measured in the reproducibility test.

5.7.2.4 Designate the greater of the response threshold values measured in this test and that measured for the same specimen in the reproducibility test as C_{max} and the lesser as C_{min}.

5.7.3 Requirements

5.7.3.1 C_{min} shall not be less than 0,4 dB.

5.7.3.2 The ratio of the response threshold values C_{max}:C_{min} shall not be greater than 1,6.

STANDARDSISO.COM : Click to view the full PDF of ISO 7240-12:2022

© ISO 2022 – All rights reserved

5.8 Optical path length dependence

5.8.1 Object of test

To demonstrate that the response threshold of the detector does not change significantly when it is tested over the minimum and maximum optical path length stated by the manufacturer.

5.8.2 Test procedure

5.8.2.1 With the agreement of the manufacturer, this test may be carried out outside of the limits of the standard atmospheric conditions of 5.1.1.

5.8.2.2 Adjust the specimen to the maximum sensitivity.

5.8.2.3 Mount the specimen in accordance with 5.1.2 and connect it to supply and monitoring equipment in accordance with 5.1.3.

5.8.2.4 Measure the response threshold value in accordance with 5.1.5 at the minimum and maximum separations in accordance with the manufacturer's instructions.

5.8.2.5 Designate the greater of the response threshold values measured in this test and that measured for the same specimen in the reproducibility test as C_{max} and the lesser as C_{min}.

5.8.3 Requirements

5.8.3.1 C_{min} shall not be less than 0,4 dB.

5.8.3.2 The ratio of the response threshold values C_{max}:C_{min} shall not be greater than 1,6.

5.9 Fire sensitivity

5.9.1 Object of test

To demonstrate that the detector has adequate sensitivity to a broad spectrum of smoke types as required for general application in fire detection systems for buildings.

5.9.2 Test procedure

5.9.2.1 Principle of test

The specimens are mounted in a standard fire test room in accordance with Figure C.1 and exposed to a series of test fires designed to produce smoke representative of a wide spectrum of types of smoke and smoke flow conditions.

5.9.2.2 Test fires

5.9.2.2.1 Subject the specimens to the four test fires, TF2 to TF5. The type, quantity and arrangement of the fuel and the method of ignition are specified in accordance with Annexes D to G for each test fire, along with the end-of-test condition and the required profile curve limits.

5.9.2.2.2 In order for a test fire to be valid, the development of the fire shall be such that the profile curves of m against y (see Annex H) and m against time, t, fall within the specified limits, up to the time when all of the specimens have generated an alarm signal or the end-of-test condition is reached, whichever is the earlier. If these conditions are not met, then the test is invalid and shall be repeated.

STANDARDSISO.COM : Click to view the full PDF of ISO 7240-12:2022

© ISO 2022 – All rights reserved

It is permissible, and can be necessary, to adjust the quantity, condition (e.g. moisture content) and arrangement of the fuel to obtain valid test fires. The formula for *m* and *y* as given in Annex H applies.

5.9.2.3 Mounting of specimens

5.9.2.3.1 Adjust the sensitivity to the minimum recommended for the separation applied, as indicated in the manufacturer's data.

5.9.2.3.2 Any adjustment for path length or alignment shall be carried out in accordance with the manufacturer's instructions.

5.9.2.3.3 If the size of the test room does not allow the detector to be tested at its maximum specified separation, a method agreed with the manufacturer (e.g. use of attenuators) should be used to simulate the specified separation.

5.9.2.3.4 Mount the two specimens (Numbers 6 and 7) on the fire test room ceiling in the designated area (see Annex C) in accordance with the manufacturer's instructions.

5.9.2.3.5 Connect each specimen to its supply and monitoring equipment, as specified in 5.1.3, and Figure C.2. Allow the specimen to stabilize in its quiescent condition before the start of each test fire.

5.9.2.3.6 Detectors which dynamically modify their sensitivity in response to varying ambient conditions can require special reset procedures and/or stabilization times. The manufacturer's guidance should be sought in such cases to ensure that the state of the detectors at the start of each test is representative of their normal quiescent state.

5.9.2.4 Initial conditions

IMPORTANT — The stability of the air and temperature affects the smoke flow within the room. This is particularly important for the test fires which produce low thermal lift for the smoke (e.g. TF2 and TF3). Therefore, the difference between the temperature near the floor and the ceiling should be <2 °C, and local heat sources that can cause convection currents (e.g. lights and heaters) should be avoided. If it is necessary for people to be in the room at the beginning of a test fire, they should leave as soon as possible, taking care to produce the minimum disturbance to the air.

5.9.2.4.1 Before each test fire:

a) ventilate the room with clean air until it is free from smoke, so that the conditions given below can be obtained;

b) clean the specimens and any attenuator(s) in accordance with the manufacturer's guidelines.

5.9.2.4.2 Switch off the ventilation system and close all doors, windows and other openings. Then, allow the air in the room to stabilize and the following conditions to be obtained before the test is started:

— air temperature, *T*: (23 ± 5) °C;

— air movement: negligible;

— smoke density (ionization): $y < 0{,}05$;

— smoke density (optical): $m < 0{,}02$ dB/m.

STANDARDSISO.COM : Click to view the full PDF of ISO 7240-12:2022

© ISO 2022 – All rights reserved

5.9.2.5 Recording of the fire parameters and response values

5.9.2.5.1 During each test fire, record the fire parameters in Table 2 as a function of time from the start of the test. Record each parameter continuously or at least once per second.

Table 2 — Fire parameters

Parameter	Symbol	Units
Temperature change	ΔT	K
Smoke density (ionization)	y	(dimensionless)
Smoke density (optical)	m	dB/m

5.9.2.5.2 The alarm signal given by the supply and monitoring equipment shall be taken as the indication that a specimen has responded to the test fire.

5.9.2.5.3 Record the time of response (alarm signal) of each specimen, along with ΔT_a, y_a and m_a, the fire parameters at the moment of response. A response of the smoke alarm after the end of test condition is ignored.

5.9.3 Requirements

Both specimens shall generate an alarm signal, in each test fire, at m_a < 0,7 dB/m.

5.10 Stray light

5.10.1 Object of test

To demonstrate that the detector is immune to stray light generated by artificial light sources.

5.10.2 Test procedure

5.10.2.1 Apparatus

The test apparatus shall be in accordance with Annex I. The test shall be conducted in accordance with 5.10.2.2 to 5.10.2.4.

5.10.2.2 State of specimen during conditioning

5.10.2.2.1 Adjust the specimen to the maximum sensitivity.

5.10.2.2.2 Mount the specimen in accordance with 5.1.2 and connect it to supply and monitoring equipment in accordance with 5.1.3 for 1 h before the test.

5.10.2.2.3 Turn on the fluorescent lamps for a period of 5 min before the test.

5.10.2.3 Conditioning

Apply the following test procedure:

a) all lights: off;

b) incandescent lights: on for 10 s and off for 10 s, 20 times;

c) fluorescent lights (6 500 K colour temperature): on for 10 s and off for 10 s, 20 times;

STANDARDSISO.COM : Click to view the full PDF of ISO 7240-12:2022

© ISO 2022 – All rights reserved

d) incandescent and 6 500 K fluorescent lights: on for 2 h;

e) fluorescent lights (5 000 K colour temperature): on for 10 s and off for 10 s, 20 times;

f) incandescent and 5 000 K fluorescent lights: on for 2 h.

5.10.2.4 Measurements during conditioning

5.10.2.4.1 After the end of period 5.10.2.3 d) and after the end of period 5.10.2.3 f), and with the lamps on, measure the response threshold value in accordance with 5.1.5 but with the conditions of Annex I.

5.10.2.4.2 Designate the greater of the response threshold values measured in this test and that measured for the same specimen in the reproducibility test as C_{max} and the lesser as C_{min}.

5.10.3 Requirements

5.10.3.1 No alarm or fault signals shall be given during the periods described in 5.10.2.3 a), b), c), d), e) and f).

5.10.3.2 C_{min} shall not be less than 0,4 dB.

5.10.3.3 The ratio of the response threshold values C_{max}:C_{min} shall not be greater than 1,6.

5.11 Dry heat (operational)

5.11.1 Object of test

To demonstrate the ability of the detector to function correctly at high ambient temperatures that can occur for short periods in the service environment.

5.11.2 Test procedure

5.11.2.1 Reference

Use the test apparatus and perform the procedure as specified in IEC 60068-2-2:2007, Test Bb, and 5.11.2.2 to 5.11.2.6.

5.11.2.2 State of the specimen during conditioning

5.11.2.2.1 Adjust the specimen to the maximum sensitivity.

5.11.2.2.2 Mount the specimen in accordance with 5.1.2 and connect it to supply and monitoring equipment in accordance with 5.1.3.

5.11.2.3 Conditioning

Apply the following conditioning:

— temperature: starting at an initial air temperature of (23 ± 5) °C, increase the air temperature to (55 ± 2) °C;

— duration: maintain this temperature for 16 h.

NOTE Test Bb specifies a rate of temperature change of <1 °C/min for the transitions to and from the conditioning temperature.

STANDARDSISO.COM : Click to view the full PDF of ISO 7240-12:2022

 © ISO 2022 – All rights reserved

5.11.2.4 Measurements during conditioning

Monitor the specimen during the conditioning period to detect any alarm or fault signals.

5.11.2.5 Intermediate measurements

At the end of the conditioning period, while the specimen is still in the conditioning atmosphere, place a filter of value 6 dB in the optical path.

5.11.2.6 Final measurements

5.11.2.6.1 After a recovery period of at least 1 h at the standard atmospheric conditions, measure the response threshold in accordance with 5.1.5.

5.11.2.6.2 Designate the greater of the response threshold values measured in this test and that measured for the same specimen in the reproducibility test as C_{max} and the lesser as C_{min}.

5.11.3 Requirements

5.11.3.1 No alarm or fault signals shall be given during the conditioning.

5.11.3.2 The detector shall emit an alarm signal no more than 30 s after the total introduction of the filter specified in 5.11.2.5.

5.11.3.3 C_{min} shall not be less than 0,4 dB.

5.11.3.4 The ratio of the response threshold values C_{max}:C_{min} shall not be greater than 1,6.

5.12 Cold (operational)

5.12.1 Object of test

To demonstrate the ability of the detector to function correctly at low ambient temperatures appropriate to the anticipated service environment.

5.12.2 Test procedure

5.12.2.1 Reference

Use the test apparatus and perform the procedure as specified in IEC 60068-2-1:2007, Test Ab and 5.12.2.2 to 5.12.2.6.

5.12.2.2 State of the specimen during conditioning

5.12.2.2.1 Adjust the specimen to the maximum sensitivity.

5.12.2.2.2 Mount the specimen in accordance with 5.1.2 and connect it to supply and monitoring equipment in accordance with 5.1.3.

5.12.2.3 Conditioning

Apply the following conditioning:

STANDARDSISO.COM : Click to view the full PDF of ISO 7240-12:2022

— temperature: (–10 ± 3) °C;

— duration: 16 h.

NOTE Test Ab specifies a rate of temperature change of <1 °C/min for the transitions to and from the conditioning temperature.

5.12.2.4 Measurements during conditioning

Monitor the specimen during the conditioning period to detect any alarm or fault signals.

5.12.2.5 Intermediate measurements

At the end of the conditioning period, while the specimen is still in the conditioning atmosphere, place a filter of value 6 dB in the optical path.

5.12.2.6 Final measurements

5.12.2.6.1 After a recovery period of at least 1 h at the standard atmospheric conditions, measure the response threshold in accordance with 5.1.5.

5.12.2.6.2 Designate the greater of the response threshold values measured in this test and that measured for the same specimen in the reproducibility test as C_{max} and the lesser as C_{min}.

5.12.3 Requirements

5.12.3.1 No alarm or fault signals shall be given during the conditioning.

5.12.3.2 The detector shall emit an alarm signal no more than 30 s after the total introduction of the filter specified in 5.12.2.5.

5.12.3.3 C_{min} shall not be less than 0,4 dB.

5.12.3.4 The ratio of the response threshold values C_{max}:C_{min} shall not be greater than 1,6.

5.13 Damp heat, steady-state (operational)

5.13.1 Object of the test

To demonstrate the ability of the detector to function correctly at high relative humidity (without condensation), which can occur for short periods in the anticipated service environment.

5.13.2 Test procedure

5.13.2.1 Reference

Use the test apparatus and perform the procedure as specified in IEC 60068-2-78:2012, Test Cab, and 5.13.2.2 to 5.13.2.5.

5.13.2.2 State of the specimen during conditioning

5.13.2.2.1 Adjust the specimen to the maximum sensitivity.

STANDARDSISO.COM : Click to view the full PDF of ISO 7240-12:2022

© ISO 2022 – All rights reserved

5.13.2.2.2 Mount the specimen in accordance with 5.1.2 and connect it to supply and monitoring equipment in accordance with 5.1.3.

5.13.2.3 Conditioning

Apply the following conditioning:

— temperature: (40 ± 2) °C;

— relative humidity: (93 ± 3) %;

— duration: 4 d.

5.13.2.4 Measurements during conditioning

Monitor the specimen during the conditioning period to detect any alarm or fault signals.

5.13.2.5 Final measurements

5.13.2.5.1 After a recovery period of at least 1 h at the standard atmospheric conditions, measure the response threshold in accordance with 5.1.5.

5.13.2.5.2 Designate the greater of the response threshold values measured in this test and that measured for the same specimen in the reproducibility test as C_{max} and the lesser as C_{min}.

5.13.3 Requirements

5.13.3.1 No alarm or fault signals shall be given during the conditioning.

5.13.3.2 C_{min} shall not be less than 0,4 dB.

5.13.3.3 The ratio of the response threshold values C_{max}:C_{min} shall not be greater than 1,6.

5.14 Damp heat, steady-state (endurance)

5.14.1 Object of test

To demonstrate the ability of the detector to withstand the long-term effects of humidity in the service environment (e.g. changes in electrical properties of materials, chemical reactions involving moisture, galvanic corrosion).

5.14.2 Test procedure

5.14.2.1 Reference

The test shall be conducted in accordance with IEC 60068-2-78:2012, Test Cab, and 5.14.2.2 to 5.14.2.4.

5.14.2.2 State of the specimen during conditioning

5.14.2.2.1 Adjust the specimen to the maximum sensitivity.

5.14.2.2.2 Mount the specimen in accordance with 5.1.2. Do not supply it with power during the conditioning.

STANDARDSISO.COM : Click to view the full PDF of ISO 7240-12:2022

5.14.2.3 Conditioning

Apply the following conditioning:

— temperature: (40 ± 2) °C;

— relative humidity: (93 ± 3) %;

— duration: 21 d.

5.14.2.4 Final measurements

5.14.2.4.1 After a recovery period of at least 1 h at the standard atmospheric conditions, measure the response threshold in accordance with 5.1.5.

5.14.2.4.2 Designate the greater of the response threshold values measured in this test and that measured for the same specimen in the reproducibility test as C_{max} and the lesser as C_{min}.

5.14.3 Requirements

5.14.3.1 C_{min} shall not be less than 0,4 dB.

5.14.3.2 The ratio of the response threshold values C_{max}:C_{min} shall not be greater than 1,6.

5.15 Vibration, sinusoidal (endurance)

5.15.1 Object of test

To demonstrate the ability of the detector to withstand the long-term effects of vibration at levels appropriate to the shipping, installation and service environment.

5.15.2 Test procedure

5.15.2.1 Reference

Use the test apparatus and perform the procedure as specified in IEC 60068-2-6:2007, Test Fc, and 5.15.2.2 to 5.15.2.4.

5.15.2.2 State of the specimen during conditioning

5.15.2.2.1 Adjust the specimen to the maximum sensitivity.

5.15.2.2.2 Mount each component (one after the other or together) in accordance with 5.1.2. Do not supply it with power during conditioning.

5.15.2.2.3 Apply the vibration in each of three mutually perpendicular axes in turn, and so that one of the three axes is perpendicular to the normal mounting axis of the specimen.

5.15.2.3 Conditioning

Apply the following conditioning:

— frequency range: (10 to 150) Hz;

STANDARDSISO.COM : Click to view the full PDF of ISO 7240-12:2022

© ISO 2022 – All rights reserved

— acceleration amplitude: 10 m/s^2 (≈1,0 g_n);

— number of axes: 3;

— sweep rate: 1 octave/min;

— number of sweep cycles: 20/axis.

5.15.2.4 Final measurements

5.15.2.4.1 After the conditioning, measure the response threshold in accordance with 5.1.5.

5.15.2.4.2 Designate the greater of the response threshold values measured in this test and that measured for the same specimen in the reproducibility test as C_{max} and the lesser as C_{min}.

5.15.3 Requirements

5.15.3.1 C_{min} shall not be less than 0,4 dB.

5.15.3.2 The ratio of the response threshold values C_{max}:C_{min} shall not be greater than 1,6.

5.16 Electromagnetic compatibility (EMC), immunity tests (operational)

5.16.1 Conduct the following EMC immunity tests as specified in IEC 62599-2:

a) electrostatic discharge;

b) radiated electromagnetic fields;

c) conducted disturbances induced by electromagnetic fields;

d) fast transient bursts;

e) slow high-energy voltage surges.

5.16.2 For these tests, the criteria for conformance as specified in IEC 62599-2 and the following shall apply:

a) the functional test called for in the initial and final measurements shall be as follows:

— measure the response threshold value as specified in 5.1.5,

— designate the greater of the response threshold value measured in this test and that measured for the same specimen in the reproducibility test as C_{max}, and the lesser as C_{min};

b) the required operating condition shall be as specified in 5.1.3;

c) the acceptance criteria for the functional test after the conditioning shall be the following:

— C_{min} shall not be less than 0,4 dB;

— the ratio of the response threshold values C_{max}:C_{min} shall not be greater than 1,6.

STANDARDSISO.COM : Click to view the full PDF of ISO 7240-12:2022

© ISO 2022 – All rights reserved

5.17 Sulfur dioxide, SO_2, corrosion (endurance)

5.17.1 Object of test

To demonstrate the ability of the detector to withstand the corrosive effects of sulfur dioxide as an atmospheric pollutant.

5.17.2 Test procedure

5.17.2.1 Reference

Use the test apparatus and perform the procedure generally as specified in IEC 60068-2-42:2003, Test Kc, and 5.17.2.2 to 5.17.2.4.

5.17.2.2 State of the specimen during conditioning

5.17.2.2.1 Adjust the specimen to the maximum sensitivity.

5.17.2.2.2 Mount the detector in accordance with 5.1.2. Do not supply it with power during the conditioning, but equip it with untinned copper wires of appropriate diameter, connected to a sufficient number of terminals to allow the final measurements to be made without making further connections to the specimen.

5.17.2.3 Conditioning

Apply the following conditioning:

— temperature: (25 ± 2) °C;

— relative humidity: (93 ± 3) %;

— SO_2 concentration: (25 ± 5) µl/l;

— duration: 21 d.

5.17.2.4 Final measurements

5.17.2.4.1 Immediately after the conditioning, the specimen shall be subjected to a drying period of 16 h at (40 ± 2) °C, <50 % RH, followed by a recovery period of at least 1 h at the standard atmospheric conditions.

5.17.2.4.2 After this recovery period, measure the response threshold as described in 5.1.5.

5.17.2.4.3 Designate the greater of the response threshold values measured in this test and that measured for the same specimen in the reproducibility test as C_{max} and the lesser as C_{min}.

5.17.3 Requirements

5.17.3.1 C_{min} shall not be less than 0,4 dB.

5.17.3.2 The ratio of the response threshold values C_{max}:C_{min} shall not be greater than 1,6.

STANDARDSISO.COM : Click to view the full PDF of ISO 7240-12:2022

© ISO 2022 – All rights reserved

5.18 Impact (operational)

5.18.1 Object of test

To demonstrate the immunity of the detector to mechanical impacts upon its surface, which it can sustain in the normal service environment and which it can reasonably be expected to withstand.

5.18.2 Test procedure

5.18.2.1 Apparatus

The test shall be conducted in accordance with IEC 60068-2-75:2014: and 5.18.2.2 to 5.18.2.5.

5.18.2.2 State of the specimen during conditioning

5.18.2.2.1 Adjust the specimen to the maximum sensitivity.

5.18.2.2.2 Mount the specimen in accordance with 5.1.2 and connect it to supply and monitoring equipment in accordance with 5.1.3.

5.18.2.3 Conditioning

5.18.2.3.1 Apply the following conditioning:

— impact energy: (0,5 ± 0,04) J;

— number of impacts per point: 3.

5.18.2.3.2 Apply impacts to each point on each component in turn which is deemed to be susceptible to mechanical damage that would impair the correct operation of the detector, with up to a maximum of 20 points on each component (e.g. lenses, windows and devices used for adjusting alignment may be deemed susceptible to damage). No two points at which the impacts are applied shall be less than 20 mm apart.

5.18.2.3.3 Take care to ensure that the results from one series of three blows do not influence subsequent series. In case of doubt with regard to the influence of preceding blows, disregard the defect and apply a further three blows to the same position on a new specimen.

5.18.2.4 Monitoring during conditioning

Where the application of the impact apparatus does not obscure the optical beam, monitor the specimen to detect any alarm or fault signals.

5.18.2.5 Final measurements

5.18.2.5.1 After the conditioning, measure the response threshold in accordance with 5.1.5.

5.18.2.5.2 Designate the greater of the response threshold values measured in this test and that measured for the same specimen in the reproducibility test as C_{max} and the lesser as C_{min}.

5.18.3 Requirements

5.18.3.1 No alarm or fault signals shall be given during the conditioning except when the beam is obstructed by the impact apparatus.

STANDARDSISO.COM : Click to view the full PDF of ISO 7240-12:2022

© ISO 2022 – All rights reserved

5.18.3.2 C_{min} shall not be less than 0,4 dB.

5.18.3.3 The ratio of the response threshold values C_{max}:C_{min} shall not be greater than 1,6.

6 Test report

The test report shall contain as a minimum the following information.

a) Identification of the detector tested.

b) Reference to this document (i.e. ISO 7240-12:2022).

c) Date of the test.

d) Results of the test specified in Clause 5:

   1) individual response threshold values and the minimum, maximum and arithmetic mean values where appropriate;

   2) conditioning period and the conditioning atmosphere;

   3) temperature and the relative humidity in the test room throughout the test;

   4) details of the supply and monitoring equipment and the alarm criteria;

   5) test method used if multiple methods are permitted.

e) Assessment of marking requirements specified in Clause 7.

f) Assessment of data requirements specified in Clause 8.

g) Details of any deviation from this document or from the International Standards to which reference is made, and of any unusual features reserved.

h) Details of any operations regarded as optional.

i) Date of the test.

7 Mrking

7.1 Each detector shall be clearly marked with the following information:

a) A reference to this document (i.e. ISO 7240-12:2022).

b) The name or trademark of the manufacturer or supplier.

c) The model designation (type or number).

d) The wiring terminal designations.

e) Some mark(s) or code(s) (e.g. serial number or batch code) by which the manufacturer can identify, at least, the date or batch and place of manufacture, and the version number(s) of any software contained within the detector.

7.2 For detachable detectors, the detector head shall be marked with a), b), c) and e), and the base shall be marked with, at least, c) and d).

7.3 The information corresponding to c) shall be clearly marked on each reflector.

STANDARDSISO.COM : Click to view the full PDF of ISO 7240-12:2022

© ISO 2022 – All rights reserved

7.4 Where any marking on the device uses symbols or abbreviations not in common use, these should be explained in the data supplied with the device.

7.5 The markings shall be visible during installation of the detector and shall be accessible during maintenance.

7.6 The markings shall not be placed on screws or other easily removable parts.

8 Data

8.1 Either detectors shall be supplied with sufficient technical, installation and maintenance data to enable their correct installation and operation or, if all of these data are not supplied with each detector, reference to the appropriate data sheet shall be given on, or with, each detector.

8.2 To enable correct operation of the detectors, these data should describe the requirements for the correct processing of the signals from the detector and include at least the following:

a) The maximum angular misalignment; if this is different for the transmitter, receiver or reflector or different for the vertical or horizontal misalignment, this shall be stated.

b) The response threshold value of the detector in dB; if the response threshold value can be adjusted, the minimum and maximum response threshold values and any setting of response behaviour that does not conform to this document shall be stated.

c) The minimum and maximum separation distance.

d) Detector classification.

8.3 For detectors with provision for on-site adjustment of their response value, these data shall describe the method of programming (e.g. by selecting a switch position on the detector or a setting from a menu in the control and indicating equipment).

8.4 Installation and maintenance data shall include reference to an *in situ* test method to ensure that detectors operate correctly when installed.

NOTE Additional information can be required by organizations certifying that detectors produced by a manufacturer conform to the requirements of this document.

STANDARDSISO.COM : Click to view the full PDF of ISO 7240-12:2022

© ISO 2022 – All rights reserved

Annex A
(informative)

Compensation for detector drift

A.1 Principles of compensation for detector drift

A.1.1 A simple detector operates by comparing the signal from the sensor with a certain fixed threshold (alarm threshold). When the sensor signal reaches the threshold, the detector generates an alarm signal. The smoke density at which this occurs is the response threshold value for the detector. In this simple detector, the alarm threshold is fixed and does not depend on the rate of change of sensor signal with time.

A.1.2 It is known that the sensor signal in clean air can change over the life of the detector. Such changes can be caused, for example, by contamination of the sensing chamber with dust or by other long-term effects such as component ageing. This drift can, in time, lead to increased sensitivity and eventually to false alarms.

A.1.3 It can be considered beneficial, therefore, to provide compensation for such drift in order to maintain a more constant level of response threshold value with time. For the purposes of this discussion, it is assumed that the compensation is achieved by increasing the alarm threshold to offset some or all of the upward drift in the sensor output.

A.1.4 Any compensation for drift reduces the sensitivity of the detector to slow changes in the sensor output even if these changes are caused by a real, but gradual, increase in smoke level. The objective of 5.7 and this annex is to ensure that the compensation does not reduce the sensitivity to a slowly developing fire to an unacceptable degree.

A.1.5 For the purposes of 5.7 and this annex, it is assumed that the development of any fire which presents a serious danger to life or property is such that the sensor output will change at a rate of at least 25 % of the initial uncompensated response threshold value of the detector, $A_{sr,u}$, per hour. At the minimum rate for which this specification applies (e.g. 0,25 $A_{sr,u}$ per hour) the maximum time to alarm without compensation is 4 h. The response to rates of change less than 0,25 $A_{sr,u}$ per hour is not specified in 5.7 and this annex, and so there is no requirement for the detector to respond to these slower rates of change.

A.1.6 In order not to restrict the way in which compensation is achieved, 5.7 requires only that the time to alarm, for all rates of change greater than 0,25 $A_{sr,u}$ per hour, does not exceed 1,6 times the time to alarm if the compensation were not present. Thus, at the minimum rate for which this specification applies (e.g. 0,25 $A_{sr,u}$ per hour) the maximum time to alarm for a compensated alarm is 1,6 × 4 h, or 6,4 h.

A.2 Linear compensation

A.2.1 If the threshold increases in a linear fashion with time in response to a rise in the sensor signal and if the extent of the compensation is not limited, then the maximum rate of compensation allowed (expressed in $A_{sr,u}$ per hour) as can be seen from Figure A.1, is described by Formula (A.1):

$$0{,}6 \times A_{sr,u} / 6{,}4 = 0{,}094 \quad \text{(A.1)}$$

STANDARDSISO.COM : Click to view the full PDF of ISO 7240-12:2022

© ISO 2022 – All rights reserved

A.2.2 At this compensation rate, the sensor output reaches the compensated threshold in exactly 6,4 h.

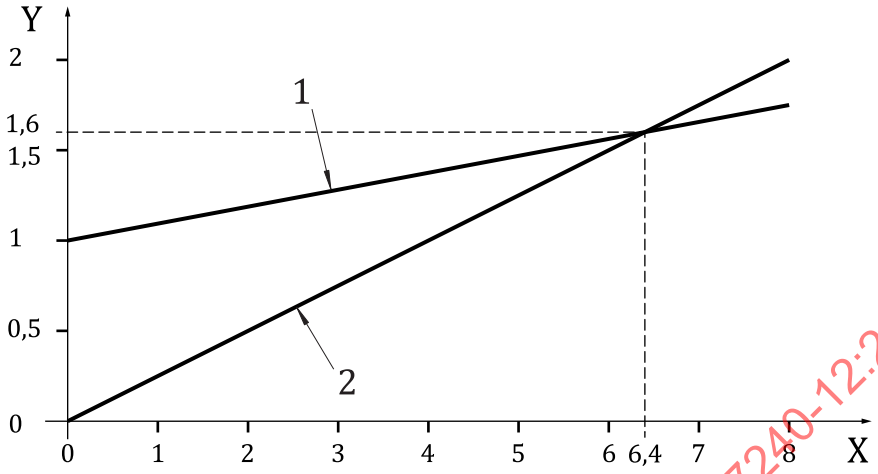

Key

X time, t, expressed in hours

Y alarm threshold relative to $A_{sr,u}$

1 alarm threshold, for linear compensation at 0,094 $A_{sr,u}$ per hour

2 sensor output, 0,25 $A_{sr,u}$ per hour

Figure A.1 — Linear compensation — Limiting case

A.3 Stepwise compensation

Although it has been assumed above that the threshold is compensated linearly and continuously, the process need not be either linear or continuous. For example, the stepwise adjustment shown in Figure A.2 also meets the requirement since, in this case, an alarm is reached in 6 h, which is less than the limiting value of 6,4 h.

STANDARDSISO.COM : Click to view the full PDF of ISO 7240-12:2022

© ISO 2022 – All rights reserved

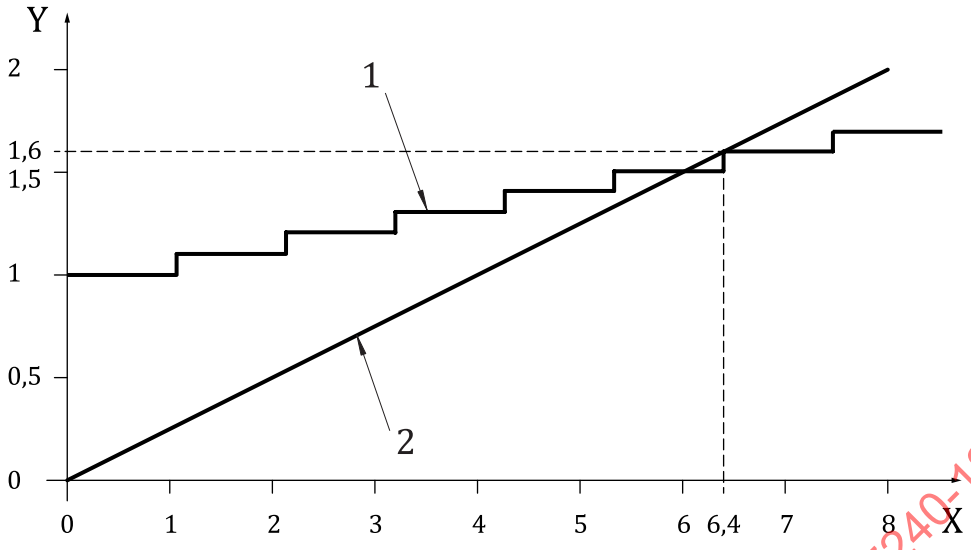

Key

X time, t, expressed in hours

Y alarm threshold relative to $A_{sr,u}$

1 alarm threshold, for stepwise compensation

2 sensor output, 0,25 $A_{sr,u}$ per hour

Figure A.2 — Stepwise compensation — Limiting case

A.4 High-rate compensation

Furthermore, the rate of compensation need not be limited to 0,094 $A_{sr,u}$ per hour if the total extent of the compensation is restricted to 0,6 $A_{sr,u}$. A relatively rapid rate of compensation balanced by a slower or zero rate, as shown in Figure A.3, also meets the requirement in reaching an alarm condition in 6,4 h or less. In this case, the maximum rate of compensation is limited only by the requirements of the test fires.

STANDARDSISO.COM : Click to view the full PDF of ISO 7240-12:2022

© ISO 2022 – All rights reserved

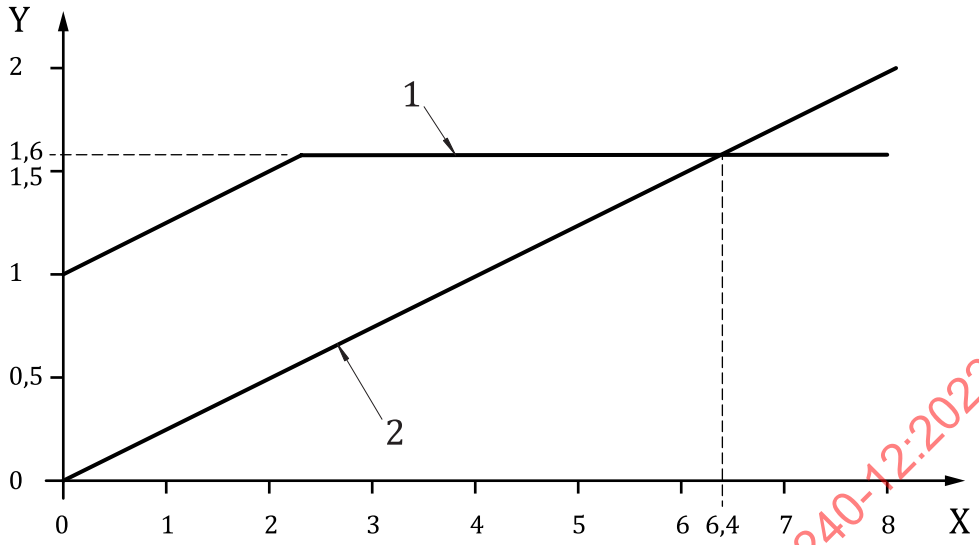

Key

X time, t, expressed in hours

Y alarm threshold relative to $A_{sr,u}$

1 alarm threshold, high-rate, limited-extent compensated

2 sensor output, 0,25 $A_{sr,u}$ per hour

Figure A.3 — High-rate, limited-extent compensation

A.5 Avoidance of the nonlinear region

A.5.1 The requirements of 5.7 allow considerable freedom in the ways of compensating for slow changes in detector sensitivity. However, it is recognized that in an actual detector, the range over which the output of the sensor is linearly related to smoke (or other stimulus which is equivalent to smoke) is finite. If the range of compensation takes the sensor output into this nonlinear region, then the sensitivity of the detector could become degraded to an unacceptable degree.

A.5.2 As an example, consider a detector having the transfer characteristic shown in Figure A.4, in which both axes are expressed in terms of response threshold value, $A_{sr,u}$. The nonlinearity of the characteristic causes the effective sensitivity to be reduced at higher values of stimulus. In this instance, the compensation should be limited to less than 1,1 × $A_{sr,u}$, since in order to produce a change

STANDARDSISO.COM : Click to view the full PDF of ISO 7240-12:2022

in output of $A_{sr,u}$, the stimulus should increase from 1,1 × $A_{th,u}$ to 2,7 × $A_{sr,u}$. This reduction in sensitivity by a factor of 1,6 is the maximum allowed by 5.7.

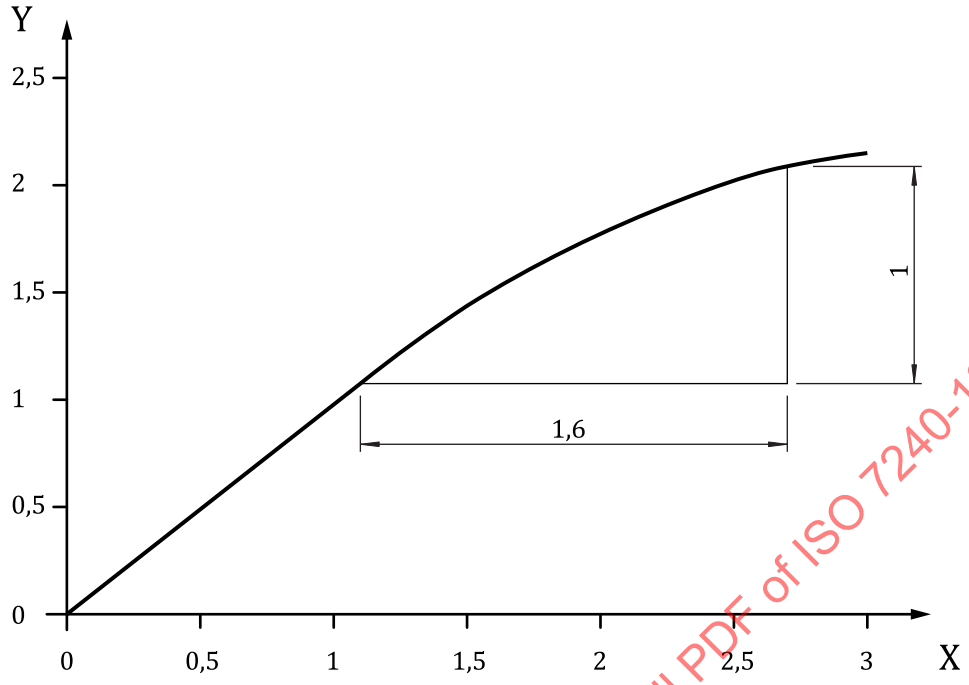

Key

X stimulus

Y output

Figure A.4 — Example of nonlinear transfer characteristic

STANDARDSISO.COM : Click to view the full PDF of ISO 7240-12:2022

© ISO 2022 – All rights reserved

Annex B
(normative)

Bench for response threshold value measurements

B.1 Technical characteristics of the attenuators

B.1.1 To simulate the effect of smoke on the detector, attenuation shall be achieved by obscuration with a filter agreed by the detector's manufacturer. The filter shall be placed such that it completely obscures the optical beam path and shall be placed to optimize the repeatability of the measurement of the response value.

B.1.2 The filter shall be positioned as close as practicable to the receiver, in agreement with the manufacturer. Where it is not suitable for some arrangements of detectors and is impractical to cover only the receiver (e.g. for a detector with a combined transmitter and receiver) the filter may cover both the transmitter and the receiver.

B.1.3 Filters used shall have a defined and appropriate spectral response over the wavelength band(s) used by the detector. The filter obscuration shall be defined at the principal wavelength used by the detector.

The spectral response of the filters should be agreed with the manufacturer. In most cases neutral density filters will be used.

Table B.1 — Minimum resolution for optical density attenuators

Attenuator obscuration dB	Minimum resolution dB
<1,0	0,1
1,0 to <2,0	0,2
2,0 to <4,0	0,3
4,0 to ≤6,0	0,4
>6,0	1,0

STANDARDSISO.COM : Click to view the full PDF of ISO 7240-12:2022

© ISO 2022 – All rights reserved

B.2 Measuring bench

Dimensions in millimetres

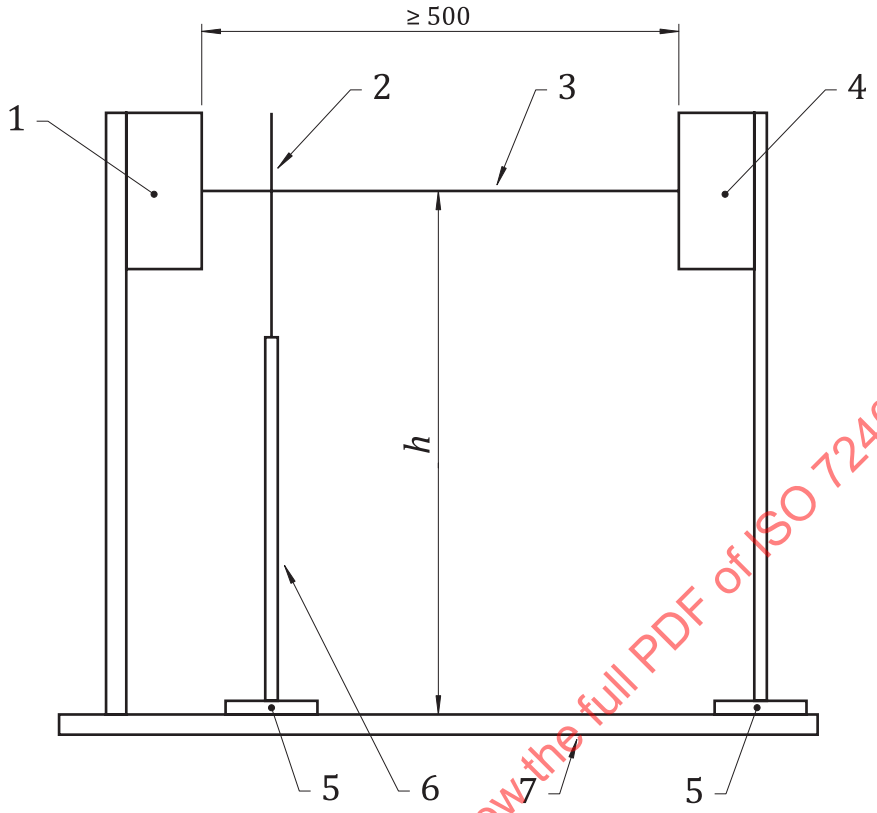

Key

1 receiver or transmitter-receiver
2 filter
3 axis of beam
4 transmitter or reflector
5 adjustment of the distance
6 adjustment of the height
7 support
h height of the axis of beam above the support

Figure B.1 — Optical bench arrangement

STANDARDSISO.COM : Click to view the full PDF of ISO 7240-12:2022

© ISO 2022 – All rights reserved

Annex C
(normative)

Fire test room

C.1 Figure C.1 shows a plan view of detectors, position of fire and measuring instruments.

Dimensions in metres

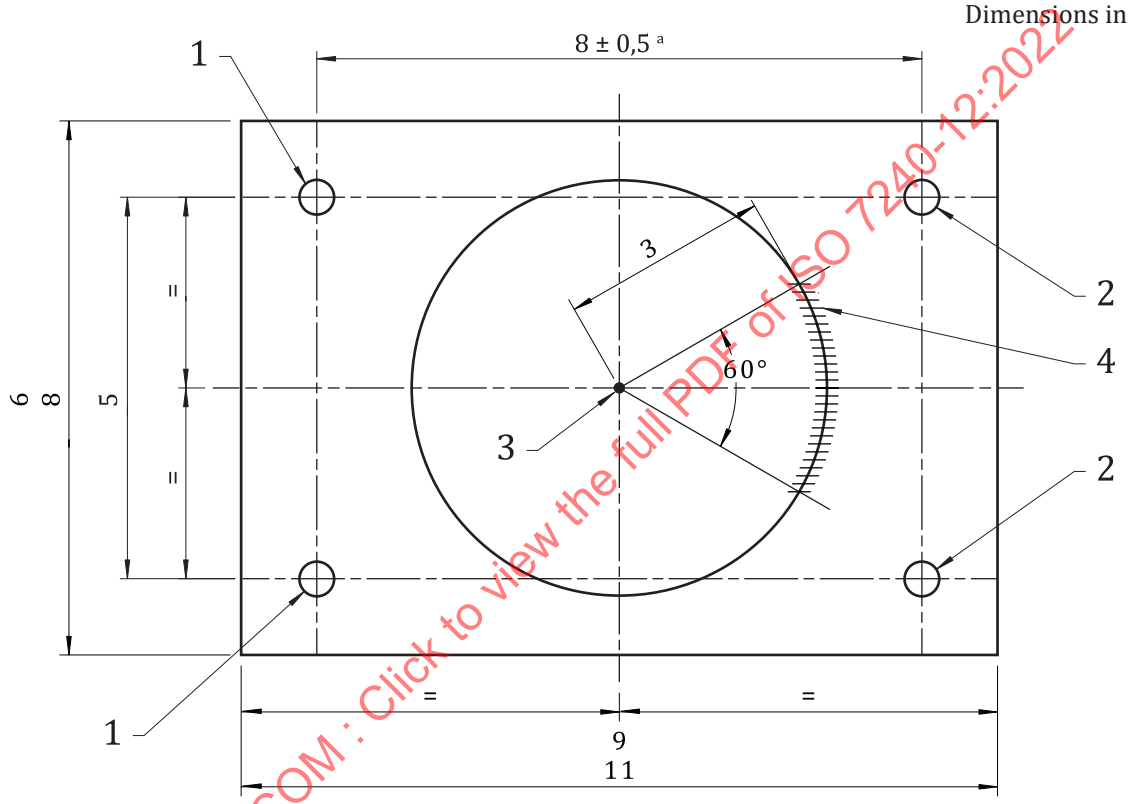

Key

1 transmitter or transmitter-receiver
2 receiver or reflector
3 position of test fire
4 measuring instruments
a Or maximum separation.

Figure C.1 — Plan view of detectors, position of fire and measuring instruments

C.2 The specimens shall be mounted such that the optical axis is at the distance from the ceiling as defined by the manufacturer. See Figure C.2.

STANDARDSISO.COM : Click to view the full PDF of ISO 7240-12:2022

© ISO 2022 – All rights reserved

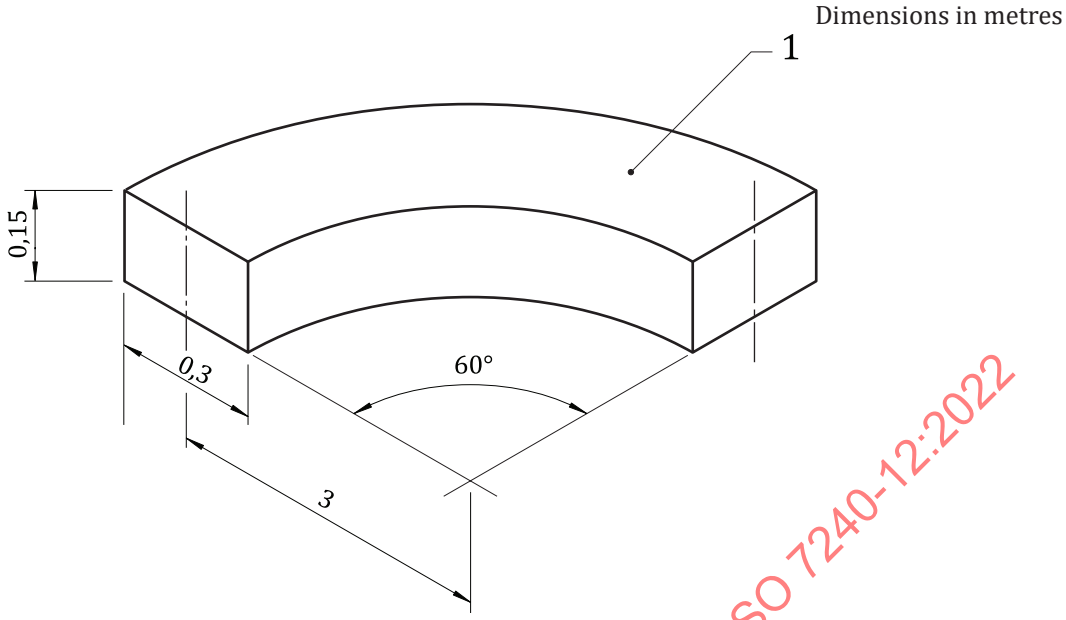

Key

1 ceiling

Figure C.2 — Mounting positions for measuring instruments

C.3 The measuring ionization chamber (MIC), the temperature probe and the measuring part of obscuration meter shall be within the volume defined in the figure.

C.4 The MIC and the mechanical parts of the obscuration meter shall be at least 100 mm apart, measured to the nearest edges.

STANDARDSISO.COM : Click to view the full PDF of ISO 7240-12:2022

© ISO 2022 – All rights reserved

Annex D
(normative)

Smouldering pyrolysis wood fire (TF2)

D.1 Fuel

Approximately 10 dried beechwood sticks, each stick having dimensions of 75 mm × 25 mm × 20 mm.

D.2 Conditioning

Dry the sticks in a heating oven so the moisture content is approximately 5 %.

D.3 Preparation

If necessary, transport the sticks from the oven in a closed plastic bag, and open the bag just prior to laying out the stick in the test arrangement.

D.4 Hotplate

D.4.1 The hotplate shall have a 220 mm diameter grooved surface with eight concentric grooves with a distance of 3 mm between grooves. Each groove shall be 2 mm deep and 5 mm wide, with the outer groove 4 mm from the edge. The hotplate shall have a rating of approximately 2 kW.

D.4.2 The temperature of the hot plate shall be measured by a sensor attached to the fifth groove, counted from the edge of the hotplate, and secured to provide a good thermal contact.

D.5 Arrangement

The sticks shall be arranged radially on the grooved hotplate surface, with the 20-mm side in contact with the surface such that the temperature probe lies between the sticks and is not covered, as shown in Figure D.1.

D.6 Heating rate

Power the hotplate such that its temperature rises from ambient to 600 °C in approximately 11 min, and is maintained for the duration of the test.

D.7 Test validity criteria

No flaming shall occur before the end-of-test condition has been reached. The development of the fire shall be such that the curves of m against y, and m against time, t, fall within the hatched areas shown in Figure D.2 and Figure D.3, respectively. That is, $1{,}23 < y < 2{,}05$ and $570\ \text{s} < t < 840\ \text{s}$ at the end-of-test condition $m_E = 2$ dB/m.

STANDARDSISO.COM : Click to view the full PDF of ISO 7240-12:2022

© ISO 2022 – All rights reserved

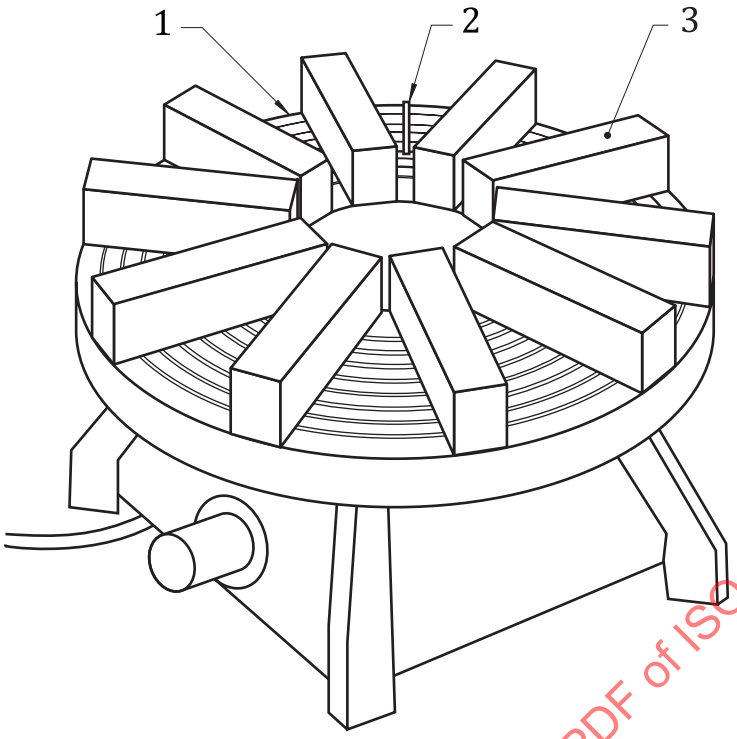

Key

1 grooved hotplate
2 temperature sensor
3 wooden sticks

Figure D.1 — Arrangement of sticks on hotplate

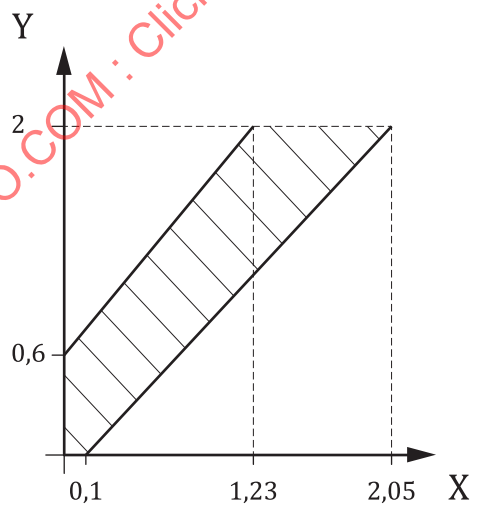

Key

X *y*-value
Y *m*-value, dB/m

Figure D.2 — Limits for *m* against *y*, Fire TF2

STANDARDSISO.COM : Click to view the full PDF of ISO 7240-12:2022

© ISO 2022 – All rights reserved

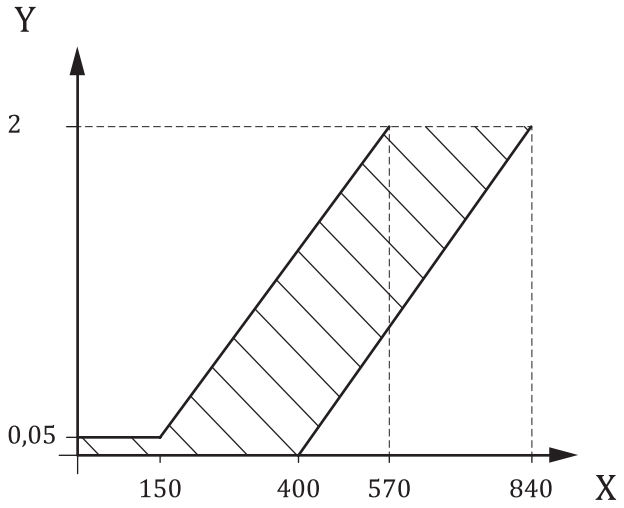

Key

X time, *t*, s

Y *m*-value, dB/m

Figure D.3 — Limits for *m* against time, *t*, Fire TF2

D.8 Variables

The number of sticks, the rate of temperature increase of the hotplate, and the degree of conditioning of the wood may be varied in order for the test fire to remain within the profile curve limits.

D.9 End-of-test condition

The end-of-test condition, m_E, shall be when m = 2 dB/m or all of the specimens have generated an alarm signal, whichever is the earlier.

STANDARDSISO.COM : Click to view the full PDF of ISO 7240-12:2022

© ISO 2022 – All rights reserved

Annex E
(normative)

Glowing smouldering cotton fire (TF3)

E.1 Fuel

Approximately 90 pieces of braided cotton wick, each of length approximately 80 cm and weighing approximately 3 g.

E.2 Conditioning

Wash and dry the wicks if they have a protective coating. Store the wicks in an environment of no more than 50 % humidity prior to being ignited.

E.3 Arrangement

Fasten the wicks to a ring approximately 10 cm in diameter and suspended approximately 1 m above a non-combustible plate as shown in Figure E.1.

STANDARDSISO.COM : Click to view the full PDF of ISO 7240-12:2022

© ISO 2022 – All rights reserved

Dimensions in metres

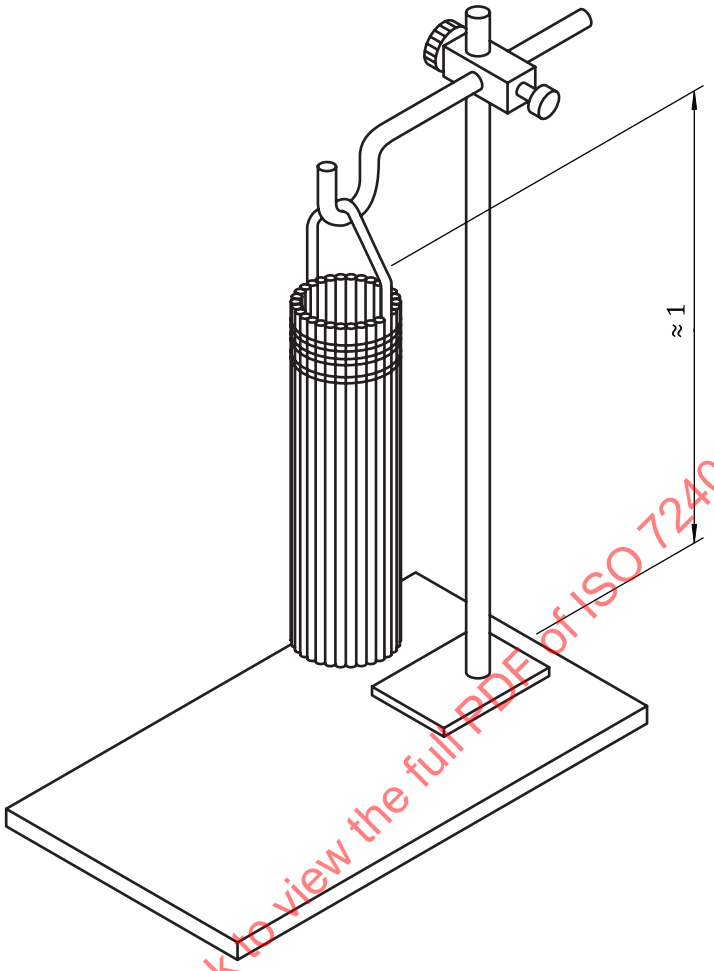

Figure E.1 — Arrangement of cotton wicks

E.4 Ignition

Ignite by match or torch. Ignite the lower end of each wick so that the wicks continue to glow. Immediately blow out any flaming. The test time shall start when all wicks are glowing.

E.5 Test validity criteria

The development of the fire shall be such that the curves of m against y, and m against time, t, fall within the hatched areas shown in Figures E.2 and E.3, respectively. That is, $3{,}2 < y < 5{,}33$ and $280\ \text{s} < t < 750\ \text{s}$ at the end-of-test condition $m_E = 2$ dB/m.

STANDARDSISO.COM : Click to view the full PDF of ISO 7240-12:2022

© ISO 2022 – All rights reserved

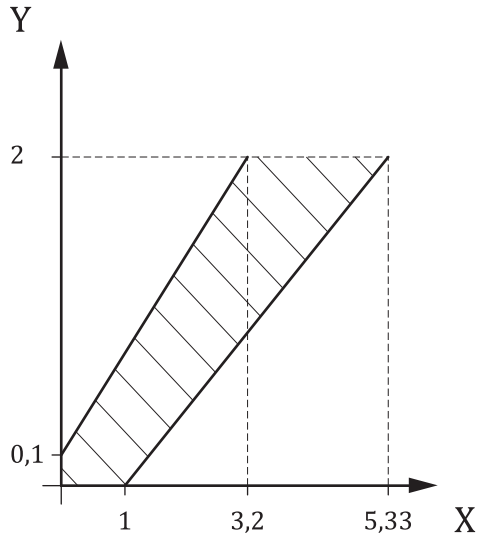

Key

X *y*-value

Y *m*-value, dB/m

Figure E.2 — Limits for *m* against *y*, Fire TF3

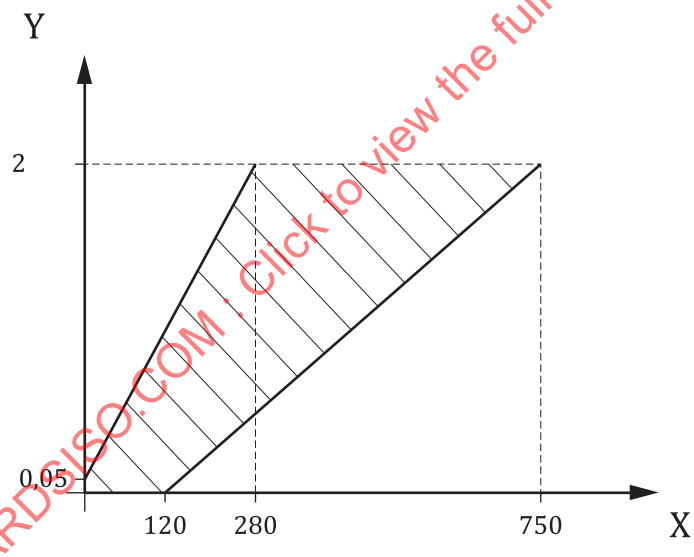

Key

X time, *t*, s

Y *m*-value, dB/m

Figure E.3 — Limits for *m* against time, *t*, Fire TF3

E.6 End-of-test condition

The end-of-test condition, m_E, shall be when m = 2 dB/m or all of the specimens have generated an alarm signal, whichever is the earlier.

STANDARDSISO.COM : Click to view the full PDF of ISO 7240-12:2022

© ISO 2022 – All rights reserved

Annex F
(normative)

Flaming plastics (polyurethane) fire (TF4)

F.1 Fuel

Three mats, approximately 50 cm × 50 cm × 2 cm, of soft polyurethane foam, without flame-retardant additives and having a density of approximately 20 kg/m^3, are usually found sufficient. However, the exact quantity of fuel may be adjusted to obtain valid tests.

F.2 Conditioning

Maintain the mats in a humidity not exceeding 50 % at least 48 h prior to test.

F.3 Arrangement

Place the mats one on top of another, on a base formed from aluminium foil with the edges folded up to provide a tray.

F.4 Ignition

Ignite by match or spark. Ignite the mats at a corner of the lower mat. The exact position of ignition may be adjusted to obtain a valid test. A small quantity of a clean burning material (e.g. 5 cm^3 of methylated spirit) may be used to assist the ignition.

F.5 Test validity criteria

The development of the fire shall be such that the curves of m against y, and m against time, t, fall within the hatched areas shown in Figures F.1 and F.2, respectively. That is, 1,27 dB/m < m < 1,73 dB/m and 140 s < t < 180 s at the end-of-test condition y_E = 6.

STANDARDSISO.COM : Click to view the full PDF of ISO 7240-12:2022

© ISO 2022 – All rights reserved