International Standard

ISO/IEC 24079

First edition
2024-07

Information technology — Network Controller Sideband Interface (NC-SI) specifications collection

Technologies de l'information — Collection de spécifications pour l'interface entre contrôleur réseau et contrôleur de gestion système (NC-SI)

STANDARDSISO.COM : Click to view the full PDF of ISO/IEC 24079:2024

Reference number
ISO/IEC 24079:2024(en)

© ISO/IEC 2024

STANDARDSISO.COM : Click to view the full PDF of ISO/IEC 24079:2024

COPYRIGHT PROTECTED DOCUMENT

© ISO/IEC 2024

All rights reserved. Unless otherwise specified, or required in the context of its implementation, no part of this publication may be reproduced or utilized otherwise in any form or by any means, electronic or mechanical, including photocopying, or posting on the internet or an intranet, without prior written permission. Permission can be requested from either ISO at the address below or ISO's member body in the country of the requester.

ISO copyright office
CP 401 • Ch. de Blandonnet 8
CH-1214 Vernier, Geneva
Phone: +41 22 749 01 11
Email: copyright@iso.org
Website: www.iso.org

Published in Switzerland

Foreword

ISO (the International Organization for Standardization) and IEC (the International Electrotechnical Commission) form the specialized system for worldwide standardization. National bodies that are members of ISO or IEC participate in the development of International Standards through technical committees established by the respective organization to deal with particular fields of technical activity. ISO and IEC technical committees collaborate in fields of mutual interest. Other international organizations, governmental and non-governmental, in liaison with ISO and IEC, also take part in the work.

The procedures used to develop this document and those intended for its further maintenance are described in the ISO/IEC Directives, Part 1. In particular, the different approval criteria needed for the different types of document should be noted (see www.iso.org/directives or www.iec.ch/members_experts/refdocs).

ISO and IEC draw attention to the possibility that the implementation of this document may involve the use of (a) patent(s). ISO and IEC take no position concerning the evidence, validity or applicability of any claimed patent rights in respect thereof. As of the date of publication of this document, ISO and IEC had not received notice of (a) patent(s) which may be required to implement this document. However, implementers are cautioned that this may not represent the latest information, which may be obtained from the patent database available at www.iso.org/patents and https://patents.iec.ch. ISO and IEC shall not be held responsible for identifying any or all such patent rights.

Any trade name used in this document is information given for the convenience of users and does not constitute an endorsement.

For an explanation of the voluntary nature of standards, the meaning of ISO specific terms and expressions related to conformity assessment, as well as information about ISO's adherence to the World Trade Organization (WTO) principles in the Technical Barriers to Trade (TBT), see www.iso.org/iso/foreword.html. In the IEC, see www.iec.ch/understanding-standards.

This document was prepared by DMTF [as DMFT Network Controller Sideband Interface (NC-SI) Specifications Collection] and drafted in accordance with its editorial rules. It was adopted, under the JTC 1 PAS procedure, by Joint Technical Committee ISO/IEC JTC 1, *Information technology*.

Any feedback or questions on this document should be directed to the user's national standards body. A complete listing of these bodies can be found at www.iso.org/members.html and www.iec.ch/national-committees.

STANDARDSISO.COM : Click to view the full PDF of ISO/IEC 24079:2024

© ISO/IEC 2024 – All rights reserved

Contents

Foreword xi
Introduction xiii
1 Scope 1
2 Normative references 2
3 Terms and definitions 3
3.1 Requirement term definitions 3
3.2 NC-SI term definitions 4
3.3 Numbers and number bases 6
3.4 Reserved fields 6
4 Symbols and abbreviated terms 6
5 Network Controller Sideband Interface (NC-SI) Specification (DSP0222) 8
5.1 NC-SI overview 8
5.2 Operational behaviors 14
5.3 Arbitration in configurations with multiple Network Controller packages 35
5.4 Packet definitions 45
5.5 Packet-based and op-code timing 105
5.6 RBT Electrical specification 107
6 Network Controller Sideband Interface (NC-SI) Collection (DSP0261) 114
6.1 NC-SI over MCTP overview 114
6.2 NC-SI over MCTP specific considerations 116
6.3 Supported NC-SI commands 126
6.4 Message types 128
6.5 NC-SI support specific to MCTP transport 132
6.6 Packet-Based Timing Specific to MCTP Binding 135
ANNEX A (normative) Extending the model 136
A.1 Commands extension 136
A.2 Design considerations 136
ANNEX B (informative) Relationship to RMII Specification 137
ANNEX C (informative) Notation and conventions 139
Bibliography 140

STANDARDSISO.COM : Click to view the full PDF of ISO/IEC 24079:2024

© ISO/IEC 2024 – All rights reserved

Figures

Figure 1 – NC-SI functional block diagram 9
Figure 2 – NC-SI traffic flow diagram 10
Figure 3 – Example topologies supported by the NC-SI 11
Figure 4 – Network Controller integration options 12
Figure 5 – NC-SI transport stack 13
Figure 6 – NC-SI operational state diagram 18
Figure 7 – NC-SI operational state diagram for hardware arbitration operation 19
Figure 8 – MC steps when the MC does not have prior knowledge of hardware arbitration 27
Figure 9 – NC-SI packet filtering flowchart 32
Figure 10 – Basic multi-drop block diagram 36
Figure 11 – Multiple Network Controllers in a ring format 37
Figure 12 – Op-code to RXD relationship 39
Figure 13 – Example TOKEN to transmit relationship 42
Figure 14 – Hardware arbitration state machine 43
Figure 15 – Ethernet frame encapsulation of NC-SI packet data without VLAN tag 45
Figure 16 – Example NC-SI signal interconnect topology 107
Figure 17 – DC measurements 109
Figure 18 – AC measurements 110
Figure 19 – Overshoot measurement 112
Figure 20 – Undershoot measurement 113
Figure 21 – NC-SI over RBT traffic flow diagram 115
Figure 22 – NC-SI over MCTP traffic flow diagram 116
Figure 23 – Single MCTP EID to multiple NC-SI channels mapping 117
Figure 24 – Multiple MCTP EIDs to multiple NC-SI channels mapping 118
Figure 25 – Multiple MCTP transport bindings example 121

STANDARDSISO.COM : Click to view the full PDF of ISO/IEC 24079:2024

© ISO/IEC 2024 – All rights reserved

Tables

Table 1 – Component documents xi
Table 2 – NC-SI operating state descriptions 15
Table 3 – Channel ID format 20
Table 4 – Channel Ready state configuration settings 21
Table 5 – Hardware arbitration di-bit encoding 38
Table 6 – Hardware arbitration op-code format 38
Table 7 – Hardware arbitration states 44
Table 8 – Hardware arbitration events 44
Table 9 – Ethernet header format 46
Table 10 – Control packet header format 47
Table 11 – Generic example of control packet payload 48
Table 12 – Generic example of response packet payload format 50
Table 13 – Reason code ranges 51
Table 14 – Standard response code values 51
Table 15 – Standard reason code values 52
Table 16 – AEN packet format 52
Table 17 – AEN types 53
Table 18 – Command and response types 53
Table 19 – Example of complete minimum-sized NC-SI command packet 55
Table 20 – Example of complete minimum-sized NC-SI response packet 55
Table 21 – Clear Initial State command packet format 56
Table 22 – Clear Initial State response packet format 56
Table 23 – Select Package command packet format 57
Table 24 – Hardware arbitration disable byte 58
Table 25 – Select Package response packet format 58
Table 26 – Deselect Package command packet format 59
Table 27 – Deselect Package response packet format 59
Table 28 – Enable Channel command packet format 59
Table 29 – Enable Channel response packet format 60
Table 30 – Disable Channel command packet format 60
Table 31 – Disable Channel response packet format 61
Table 32 – Reset Channel command packet format 61
Table 33 – Reset Channel response packet format 61

STANDARDSISO.COM : Click to view the full PDF of ISO/IEC 24079:2024

© ISO/IEC 2024 – All rights reserved

Table 34 – Enable Channel Network TX command packet format 62
Table 35 – Enable Channel Network TX response packet format 62
Table 36 – Disable Channel Network TX command packet format 62
Table 37 – Disable Channel Network TX response packet format 63
Table 38 – AEN Enable command packet format 63
Table 39 – Format of AEN control 64
Table 40 – AEN Enable response packet format 64
Table 41 – Set Link command packet format 65
Table 42 – Set Link bit definitions 65
Table 43 – OEM Set Link bit definitions 66
Table 44 – Set Link response packet format 66
Table 45 – Set Link command-specific reason codes 66
Table 46 – Get Link Status command packet format 67
Table 47 – Get Link Status response packet format 67
Table 48 – Link Status field bit definitions 67
Table 49 – Other Indications field bit definitions 71
Table 50 – OEM Link Status field bit definitions (optional) 71
Table 51 – Get Link Status command-specific reason code 71
Table 52 – IEEE 802.1q VLAN fields 72
Table 53 – Set VLAN Filter command packet format 72
Table 54 – Possible settings for Filter Selector field (8-bit field) 72
Table 55 – Possible settings for Enable (E) field (1-bit field) 72
Table 56 – Set VLAN Filter response packet format 73
Table 57 – Set VLAN Filter command-specific reason code 73
Table 58 – Enable VLAN command packet format 73
Table 59 – VLAN Enable modes 73
Table 60 – Enable VLAN response packet format 74
Table 61 – Disable VLAN command packet format 74
Table 62 – Disable VLAN response packet format 75
Table 63 – Set MAC Address command packet format 76
Table 64 – Possible settings for MAC Address Number (8-bit field) 76
Table 65 – Possible settings for Address Type (3-bit field) 76
Table 66 – Possible settings for Enable Field (1-bit field) 77
Table 67 – Set MAC Address response packet format 77

STANDARDSISO.COM : Click to view the full PDF of ISO/IEC 24079:2024

© ISO/IEC 2024 – All rights reserved

Table 68 – Set MAC Address command-specific reason code 77
Table 69 – Enable Broadcast Filter command packet format 77
Table 70 – Broadcast Packet Filter Settings field 78
Table 71 – Enable Broadcast Filter response packet format 79
Table 72 – Disable Broadcast Filter command packet format 79
Table 73 – Disable Broadcast Filter response packet format 79
Table 74 – Enable Global Multicast Filter command packet format 80
Table 75 – Bit definitions for Multicast Packet Filter Settings field 81
Table 76 – Enable Global Multicast Filter response packet format 82
Table 77 – Disable Global Multicast Filter command packet format 83
Table 78 – Disable Global Multicast Filter response packet format 83
Table 79 – Set NC-SI Flow Control command packet format 84
Table 80 – Values for the Flow Control Enable field (8-bit field) 84
Table 81 – Set NC-SI Flow Control response packet format 85
Table 82 – Set NC-SI Flow Control command-specific reason code 85
Table 83 – Get Version ID command packet format 85
Table 84 – Get Version ID response packet format 85
Table 85 – Get Capabilities command packet format 87
Table 86 – Get Capabilities response packet format 88
Table 87 – Capabilities Flags bit definitions 88
Table 88 – VLAN Mode Support bit definitions 90
Table 89 – Get Parameters command packet format 90
Table 90 – Get Parameters response packet format 91
Table 91 – Get Parameters data definition 92
Table 92 – MAC Address Flags bit definitions 92
Table 93 – VLAN Tag Flags bit definitions 92
Table 94 – Configuration Flags bit definitions 93
Table 95 – Get Controller Packet Statistics command packet format 93
Table 96 – Get Controller Packet Statistics response packet format 94
Table 97 – Get Controller Packet Statistics counters 95
Table 98 – Counters Cleared from Last Read Fields format 96
Table 99 – Get NC-SI Statistics command packet format 97
Table 100 – Get NC-SI Statistics response packet format 97
Table 101 – Get NC-SI Statistics counters 98

STANDARDSISO.COM : Click to view the full PDF of ISO/IEC 24079:2024

© ISO/IEC 2024 – All rights reserved

Table 102 – Get NC-SI Pass-through Statistics command packet format 98
Table 103 – Get NC-SI Pass-through Statistics response packet format 99
Table 104 – Get NC-SI Pass-through Statistics counters 99
Table 105 – Get Package Status packet format 100
Table 106 – Get Package Status response packet format 101
Table 107 – Package Status field bit definitions 101
Table 108 – OEM command packet format 101
Table 109 – OEM response packet format 102
Table 110 – PLDM Request packet format 102
Table 111 – PLDM Response packet format 102
Table 112 – Get Package UUID command packet format 103
Table 113 – Get Package UUID response packet format 103
Table 114 – UUID format 104
Table 115 – Link Status Change AEN packet format 104
Table 116 – Configuration Required AEN packet format 105
Table 117 – Host Network Controller Driver Status Change AEN packet format 105
Table 118 – Host Network Controller Driver Status format 105
Table 119 – NC-SI packet-based and op-code timing parameters 106
Table 120 – Physical NC-SI signals 108
Table 121 – DC specifications 109
Table 122 – AC specifications 111
Table 123 – MCTP Message types for NC-SI over MCTP 116
Table 124 – Ordering rules 120
Table 125 – Supported NC-SI commands 126
Table 126 – NC-SI messages encapsulation 129
Table 127 – MCTP Transport Header fields 129
Table 128 – MCTP Specific Message Header field 129
Table 129 – Ethernet messages encapsulation 130
Table 130 – MCTP Transport Header fields 131
Table 131 – MCTP Specific Message Header field 131
Table 132 – Get Supported Media Command packet format 132
Table 133 – Get Supported Media Response packet format 132
Table 134 – Get Supported Media Response media descriptors format 133
Table 135 – Transport Specific AENs Enable Command packet format 133

STANDARDSISO.COM : Click to view the full PDF of ISO/IEC 24079:2024

© ISO/IEC 2024 – All rights reserved

Table 136 – Transport Specific AENs Enable field format 134
Table 137 – Transport-specific AENs Enable Response packet format 134
Table 138 – Medium change AEN format 134
Table 139 – NC-SI Timing Parameters Specific to MCTP Binding 135

STANDARDSISO.COM : Click to view the full PDF of ISO/IEC 24079:2024

© ISO/IEC 2024 – All rights reserved

Foreword

The *Network Controller Sideband Interface (NC-SI) Specification* was prepared by the PMCI Working Group. DMTF is a not-for-profit association of industry members dedicated to promoting enterprise and systems management and interoperability.

Component documents

Table 1 lists the component documents for this specification:

Table 1 – Component documents

Document number	Document title	Version
DSP0222	Network Controller Sideband Interface (NC-SI) Specification (DSP0222)	1.1.1
DSP0261	Network Controller Sideband Interface (NC-SI) Collection (DSP0261)	1.2.3

Acknowledgments

The DMTF acknowledges the following individuals for their contributions to this document:

Editors:

- Eliel Louzoun – Intel Corporation
- Hemal Shah – Broadcom Corporation
- Bob Stevens – Dell
- Tom Slaight – Intel Corporation

Contributors:

- Alan Berenbaum – SMSC
- Patrick Caporale – Lenovo
- Philip Chidester – Dell Technologies
- Kelly Couch – Intel Corporation
- Benzi Friedman – Intel Corporation
- Yuval Itkin – Mellanox Technologies and NVIDIA Corporation
- Ira Kalman – Intel Corporation
- Ed Klodnicki – IBM
- Joe Kozlowski – Dell Technologies
- Patrick Kutch – Intel Corporation
- John Leung – Intel Corporation
- Eliel Louzoun – Intel Corporation
- Patrick Schoeller – Hewlett-Packard Company and Intel Corporation

STANDARDSISO.COM : Click to view the full PDF of ISO/IEC 24079:2024

© ISO/IEC 2024 – All rights reserved

- Hemal Shah – Broadcom Inc.
- Tom Slaight – Intel Corporation
- Bob Stevens – Dell Technologies

STANDARDSISO.COM : Click to view the full PDF of ISO/IEC 24079:2024

© ISO/IEC 2024 – All rights reserved

Introduction

Network Controller Sideband Interface (NC-SI) Specification (DSP0222)

In out-of-band management environments, the interface between the out-of-band Management Controller and the Network Controller is critical. This interface is responsible for supporting communication between the Management Controller and external management applications. Currently there are multiple such proprietary interfaces in the industry, leading to inconsistencies in implementation of out-of-band management.

The goal of this specification is to define an interoperable sideband communication interface standard to enable the exchange of management data between the Management Controller and Network Controller. The Sideband Interface is intended to provide network access for the Management Controller, and the Management Controller is expected to perform all the required network functions.

This specification defines the protocol and commands necessary for the operation of the sideband communication interface. This specification also defines physical and electrical characteristics of a sideband binding interface that is a variant of RMII targeted specifically for sideband communication traffic.

The specification is primarily intended for architects and engineers involved in the development of network interface components and Management Controllers that will be used in providing out-of-band management.

NC-SI over MCTP Binding Specification (DSP0261)

The *NC-SI over MCTP Binding Specification* defines new MCTP messages used to convey NC-SI Control packets and Ethernet traffic over MCTP to allow NC-SI Pass-through traffic over MCTP. This specification is based on the DSP0222 1.1 specification and uses the same NC-SI Control packet definitions.

Document conventions

Typographical conventions

The following typographical conventions are used in this document:

- Document titles are marked in *italics*.
- Important terms that are used for the first time are marked in *italics*.
- Terms include a link to the term definition in Terms and definitions, enabling easy navigation to the term definition.
- ABNF rules are in `monospaced font`.

ABNF usage conventions

Format definitions in this document are specified using ABNF (see RFC5234), with the following deviations:

- Literal strings are to be interpreted as case-sensitive Unicode characters, as opposed to the definition in RFC5234 that interprets literal strings as case-insensitive US-ASCII characters.

STANDARDSISO.COM : Click to view the full PDF of ISO/IEC 24079:2024

© ISO/IEC 2024 – All rights reserved

Reserved and unassigned values

Unless otherwise specified, any reserved, unspecified, or unassigned values in enumerations or other numeric ranges are reserved for future definition by the DMTF.

Unless otherwise specified, numeric or bit fields that are designated as reserved shall be written as 0 (zero) and ignored when read.

Byte ordering

Unless otherwise specified, byte ordering of multibyte numeric fields or bit fields is "Big Endian" (that is, the lower byte offset holds the most significant byte, and higher offsets hold lesser significant bytes).

Other conventions

See ANNEX C
(informative)

Notation and conventions for other conventions.

STANDARDSISO.COM : Click to view the full PDF of ISO/IEC 24079:2024

© ISO/IEC 2024 – All rights reserved

Information technology — Network Controller Sideband Interface (NC-SI) Specifications Collection

1 Scope

Network Controller Sideband Interface (NC-SI) Specification (DSP0222)

This specification defines the functionality and behavior of the Sideband Interface responsible for connecting the Network Controller to the Management Controller. It also outlines the behavioral model of the network traffic destined for the Management Controller from the Network Controller.

This specification defines the following two aspects of the Network Controller Sideband Interface (NC-SI):

- behavior of the interface, which include its operational states as well as the states of the associated components
- the payloads and commands of the communication protocol supported over the interface

The scope of this specification is limited to addressing only a single Management Controller communicating with one or more Network Controllers.

This specification also defines the following aspects of a 3.3V RMII Based Transport (RBT) based physical medium:

- transport binding for NC-SI over RBT
- electrical and timing requirements for the RBT
- an optional hardware arbitration mechanism for RBT

Only the topics that may affect the behavior of the Network Controller or Management Controller, as it pertains to the Sideband Interface operations, are discussed in this specification.

NC-SI over MCTP Binding Specification (DSP0261)

This specification defines the bindings between NC-SI protocol elements and MCTP elements in order for NC-SI Control and Pass-Through traffic to be transported using MCTP.

Portions of this specification rely on information and definitions from other specifications, which clause 2 identifies. Two of these references are particularly relevant:

- DMTF DSP0222, *Network Controller Sideband Interface (NC-SI) Specification*, provides the NC-SI base control that is to be bound over MCTP by this specification.
- DMTF DSP0236, *Management Component Transport Protocol (MCTP) Base Specification*, defines the MCTP transport on which the NC-SI Control and Pass-through packets are to be conveyed.

STANDARDSISO.COM : Click to view the full PDF of ISO/IEC 24079:2024

© ISO/IEC 2024 – All rights reserved

2 Normative references

The following referenced documents are indispensable for the application of this document. For dated or versioned references, only the edition cited (including any corrigenda or DMTF update versions) applies. For references without a date or version, the latest published edition of the referenced document (including any corrigenda or DMTF update versions) applies.

ACPI, *Advanced Configuration and Power Interface Specification Revision 4.0a*, April 5, 2010, http://www.acpi.info/DOWNLOADS/ACPIspec40a.pdf

DMTF DSP0004, *CIM Infrastructure Specification 3.0*, http://www.dmtf.org/standards/published_documents/DSP0004_3.0.pdf

DMTF DSP0222, *Network Controller Sideband Interface (NC-SI) Specification 1.1,* http://www.dmtf.org/sites/default/files/standards/documents/DSP0222_1.1.0.pdf

DMTF DSP0223, *Generic Operations 1.0*, http://www.dmtf.org/standards/published_documents/DSP0223_1.0.pdf

DMTF DSP0236, *Management Component Transport Protocol (MCTP) Base Specification 1.3,* http://www.dmtf.org/standards/published_documents/DSP0236_1.3.pdf

DMTF DSP0237, *Management Component Transport Protocol (MCTP) SMBus/I2C Transport Binding Specification 1.1,* http://www.dmtf.org/standards/published_documents/DSP0237_1.1.pdf

DMTF DSP0238, *Management Component Transport Protocol (MCTP) PCIe VDM Transport Binding Specification 1.0,* http://www.dmtf.org/standards/published_documents/DSP0238_1.0.pdf

DMTF DSP0239, *Management Component Transport Protocol (MCTP) IDs and Codes 1.4,* http://www.dmtf.org/standards/published_documents/DSP0239_1.4.pdf

DMTF DSP0240, *Platform Level Data Model (PLDM) Base 5 Specification 1.1.0,* https://www.dmtf.org/sites/default/files/standards/documents/DSP0240_1.1.0.pdf

DMTF DSP0261, *NC-SI over MCTP Binding Specification 1.0,* http://www.dmtf.org/standards/published_documents/DSP0261_1.0.pdf

DMTF DSP1001, *Management Profile Specification Usage Guide 1.2,* http://www.dmtf.org/standards/published_documents/DSP1001_1.2.pdf

IEEE 802.3, *802.3™ IEEE Standard for Information technology— Part 3: Carrier sense multiple access with collision detection (CSMA/CD) access method and physical layer specifications,* December 2005, http://www.ieee.org/portal/site

IEEE 802.1Q, *IEEE 802.1Q-2005 IEEE Standard for Local and Metropolitan Area Networks—Virtual Bridged Local Area Networks*, http://www.ieee.org/portal/site. This standard defines the operation of Virtual LAN (VLAN) Bridges that permit the definition, operation and administration of Virtual LAN topologies within a Bridged LAN infrastructure.

IETF RFC2131, *Dynamic Host Configuration Protocol* (DHCP), March 1997, http://www.ietf.org/rfc/rfc2131.txt

IETF RFC2373, *IP Version 6 Addressing Architecture*, July 1998, http://www.ietf.org/rfc/rfc2373.txt

IETF RFC2461, *Neighbor Discovery for IP Version 6 (IPv6)*, December 1998, http://www.ietf.org/rfc/rfc2461.txt

STANDARDSISO.COM : Click to view the full PDF of ISO/IEC 24079:2024

© ISO/IEC 2024 – All rights reserved

IETF RFC2464, *Transmission of IPv6 Packets over Ethernet Networks*, December 1998, http://www.ietf.org/rfc/rfc2464.txt

IETF RFC3315, *Dynamic Host Configuration Protocol for IPv6 (DHCPv6)*, July 2003, http://www.ietf.org/rfc/rfc3315.txt

IETF, RFC4122, *A Universally Unique Identifier (UUID) URN Namespace*, July 2005, http://datatracker.ietf.org/doc/rfc4122/

IETF RFC5234, *ABNF: Augmented BNF for Syntax Specifications, January 2008*, http://tools.ietf.org/html/rfc5234

ISO/IEC Directives, Part 2, *Rules for the structure and drafting of International Standards,* http://isotc.iso.org/livelink/livelink.exe?func=ll&objId=4230456&objAction=browse&sort=subtype

Reduced Media Independent Interface (RMII) Consortium, *RMII Specification*, revision 1.2, March 20, 1998, http://ebook.pldworld.com/_eBook/-Telecommunications,Networks-/TCPIP/RMII/rmii_rev12.pdf

3 Terms and definitions

For the purposes of this document, the following terms and definitions apply.

In this document, some terms have a specific meaning beyond the normal English meaning. This clause defines those terms.

The terms "shall" ("required"), "shall not", "should" ("recommended"), "should not" ("not recommended"), "may", "need not" ("not required"), "can" and "cannot" in this document are to be interpreted as described in ISO/IEC Directives, Part 2, Clause 7. The terms in parentheses are alternatives for the preceding term, for use in exceptional cases when the preceding term cannot be used for linguistic reasons. Note that ISO/IEC Directives, Part 2, Clause 7 specifies additional alternatives. Occurrences of such additional alternatives shall be interpreted in their normal English meaning.

The terms "clause", "subclause", "paragraph", and "annex" in this document are to be interpreted as described in ISO/IEC Directives, Part 2, Clause 6.

The terms "normative" and "informative" in this document are to be interpreted as described in ISO/IEC Directives, Part 2, Clause 3. In this document, clauses, subclauses, or annexes labeled "(informative)" do not contain normative content. Notes and examples are always informative elements.

The terms that DSP0004, DSP0223, DSP0236, and DSP1001 apply to this document. The following additional terms are used in this document.

3.1 Requirement term definitions

This clause defines key phrases and words that denote requirement levels in this specification.

3.1.1
deprecated
indicates that an element or profile behavior has been outdated by newer constructs

3.1.2
obsolete
indicates that an item was defined in prior specifications but has been removed from this specification

STANDARDSISO.COM : Click to view the full PDF of ISO/IEC 24079:2024

© ISO/IEC 2024 – All rights reserved

3.2 NC-SI term definitions

For the purposes of this document, the following terms and definitions apply.

3.2.1
Asynchronous Event Notification
control packet sent by the Network Controller to the Management Controller as an explicit notification of the occurrence of an event of interest to the Management Controller

3.2.2
channel
the control logic and data paths that support NC-SI Pass-through operations through a single network interface (port)

Note 1 to entry: A Network Controller that has multiple network interface ports can support an equivalent number of NC-SI channels.

3.2.3
command
control packet sent by the Management Controller to the Network Controller to request the Network Controller to perform an action, and/or return data

3.2.4
control traffic
control packets
command, response, and asynchronous event notification packets transmitted between the Management Controller and Network Controllers for the purpose of managing the NC-SI

3.2.5
external network interface
the interface of the Network Controller that provides connectivity to the external network infrastructure

Note 1 to entry: also known as *port.*

3.2.6
frame
a data packet of fixed or variable length that has been encoded for digital transmission over a node-to-node link

Note 1 to entry: *Frame* is used in references to IEEE 802.3 Frames. *Packet* is used in all other references.

3.2.7
integrated controller
a Network Controller device that supports two or more channels for the NC-SI that share a common NC-SI physical interface (for example, a Network Controller that has two or more physical network ports and a single NC-SI bus connection)

3.2.8
internal host interface
the interface of the Network Controller that provides connectivity to the host operating system running on the platform

STANDARDSISO.COM : Click to view the full PDF of ISO/IEC 24079:2024

© ISO/IEC 2024 – All rights reserved

3.2.9
Management Controller
an intelligent entity composed of hardware/firmware/software that resides within a platform and is responsible for some or all of the management functions associated with the platform; also known as BMC and Service Processor

3.2.10
multi-drop
the situation in which multiple physical communication devices share an electrically common bus and one device acts as the master of the bus and communicates with multiple "slave" or "target" devices

Note 1 to entry: Related to NC-SI, a Management Controller serves the role of the master, and the Network Controllers are the target devices.

3.2.11
Network Controller
the component within a system that is responsible for providing connectivity to an external Ethernet network

3.2.12
Network Controller Sideband Interface
NC-SI
the interface of the Network Controller that provides network connectivity to a Management Controller; also shown as *Sideband Interface* or *NC-SI* as appropriate in the context

3.2.13
package
one or more NC-SI channels in a Network Controller that share a common set of electrical buffers and common electrical buffer controls for the NC-SI bus

Note 1 to entry: Typically, a single, logical NC-SI package exists for a single physical Network Controller package (chip or module). However, this specification allows a single physical chip or module to hold multiple NC-SI logical packages.

3.2.14
packet
a formatted block of information carried by a computer network

Note 1 to entry: *Frame* is used in references to IEEE 802.3 Frames. *Packet* is used in all other references.

3.2.15
pass-through traffic
pass-through packets
network packets passed between the external network and the Management Controller through the Network Controller

3.2.16
point-to-point
the situation in which only a single Management Controller and single Network Controller package are used on the bus in a master/slave relationship, where the Management Controller is the master

3.2.17
RBT
RMII-Based Transport
electrical and timing specification for a 3.3V physical medium that is derived from RMII

STANDARDSISO.COM : Click to view the full PDF of ISO/IEC 24079:2024

© ISO/IEC 2024 – All rights reserved

3.2.18
remote media
a manageability feature that enables remote media devices to appear as if they are attached locally to the host

3.2.19
response
control packet sent by the Network Controller to the Management Controller as a positive acknowledgment of a command received from the Management Controller, and to provide the processing outcome of the command, as well as to return any required data

3.2.20
System Power States
S0 and Sx
S0 represents an active system
Sx represents system power states S1 – S5, which reflects various levels of inactivity of a system

Note 1 to entry: The definition of the power states is as ACPI defines.

3.3 Numbers and number bases

Hexadecimal numbers are written with a `0x` prefix (for example, `0xFFF` and `0x80`). Binary numbers are written with a lowercase `b` suffix (for example, `1001b` and `10b`). Hexadecimal and binary numbers are formatted in the `Courier New` font.

3.4 Reserved fields

Unless otherwise specified, reserved fields are reserved for future use and should be written as zeros and ignored when read.

4 Symbols and abbreviated terms

The abbreviations that DSP0004, DSP0223, DSP0236, and DSP1001 define apply to this document. The following additional abbreviations are used in this document.

4.1
AC
alternating current

4.2
ACPI
Advanced Configuration and Power Interface

4.3
AEN
Asynchronous Event Notification

4.4
BMC
Baseboard Management Controller (often used interchangeably with MC)

STANDARDSISO.COM : Click to view the full PDF of ISO/IEC 24079:2024

© ISO/IEC 2024 – All rights reserved

4.5
CRC
cyclic redundancy check

4.6
CRS_DV
a physical NC-SI signal used to indicate Carrier Sense/Received Data Valid

4.7
DC
direct current

4.8
DHCP
Dynamic Host Configuration Protocol

4.9
EEE
Energy Efficient Ethernet

4.10
FCS
Frame Check Sequence

4.11
IANA
Internet Assigned Numbers Authority

4.12
MC
Management Controller

4.13
MCTP
Management Component Transport Protocol

4.14
NC
Network Controller

4.15
NC-SI
Network Controller Sideband Interface

4.16
NC-SI RX
the direction of traffic on the NC-SI from the Network Controller to the Management Controller

4.17
NC-SI TX
the direction of traffic on the NC-SI to the Network Controller from the Management Controller

4.18
RID
PCIe Requester ID (Bus/Device/Function)

STANDARDSISO.COM : Click to view the full PDF of ISO/IEC 24079:2024

© ISO/IEC 2024 – All rights reserved

4.19
RMII
Reduced Media Independent Interface

4.20
RX
Receive

4.21
RXD
physical NC-SI signals used to transmit data from the Network Controller to the Management Controller

4.22
RX_ER
a physical NC-SI signal used to indicate a Receive Error

4.23
SerDes
serializer/deserializer; an integrated circuit (IC or chip) transceiver that converts parallel data to serial data and vice-versa. This is used to support interfaces such as 1000Base-X and others.

4.24
TX
Transmit

4.25
TXD
physical NC-SI signals used to transmit data from the Management Controller to the Network Controller

4.26
VLAN
Virtual LAN

5 Network Controller Sideband Interface (NC-SI) Specification (DSP0222)

5.1 NC-SI overview

5.1.1 General

With the increasing emphasis on out-of-band manageability and functionality, such as Remote Media (R-Media) and Remote Keyboard-Video-Mouse (R-KVM), the need for defining an industry standard Network Controller Sideband Interface (NC-SI) has become clear. This specification enables a common interface definition between different Management Controller and Network Controller vendors. This specification addresses not only the electrical and protocol specifications, but also the system-level behaviors for the Network Controller and the Management Controller related to the NC-SI.

The NC-SI is the interface (protocol, messages, and medium) between a Management Controller and one or multiple Network Controllers. This interface, referred to as a Sideband Interface in Figure 1, is responsible for providing external network connectivity for the Management Controller while also allowing the external network interface to be shared with traffic to and from the host.

STANDARDSISO.COM : Click to view the full PDF of ISO/IEC 24079:2024

© ISO/IEC 2024 – All rights reserved

The specification of how the NC-SI protocol and messages are implemented over a particular physical medium is referred to as a transport binding. This document, DSP0222, includes the definition of the transport binding, electrical, framing, and timing specifications for a physical interface called RBT (RMII-based Transport). Electrically, RBT, as clause 5.6 describes, is similar to the Reduced Media Independent Interface™ (RMII)—see ANNEX B
(informative)

Relationship to RMII Specification. Transport bindings for NC-SI over other media and transport protocols are defined through external transport binding specifications, such as DSP0261, the *NC-SI over MCTP Transport Binding Specification*.

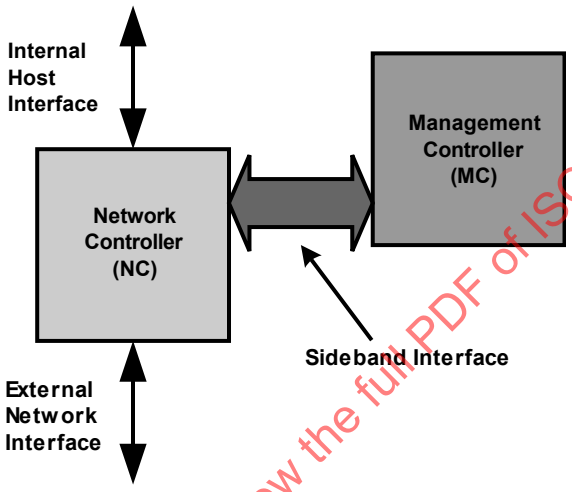

Figure 1 – NC-SI functional block diagram

NC-SI traffic flow is illustrated in Figure 2. Two classes of packet data can be delivered over the Sideband Interface:

- "Pass-through" packets that are transferred between the Management Controller and the external network
- "Control" packets that are transferred between the Management Controller and Network Controllers for control or configuration functionality. This specification defines a number of NC-SI commands and responses as well as a mechanism to customize and extend functionality via OEM commands—see ANNEX A
(normative)

  Extending the model.

STANDARDSISO.COM : Click to view the full PDF of ISO/IEC 24079:2024

© ISO/IEC 2024 – All rights reserved

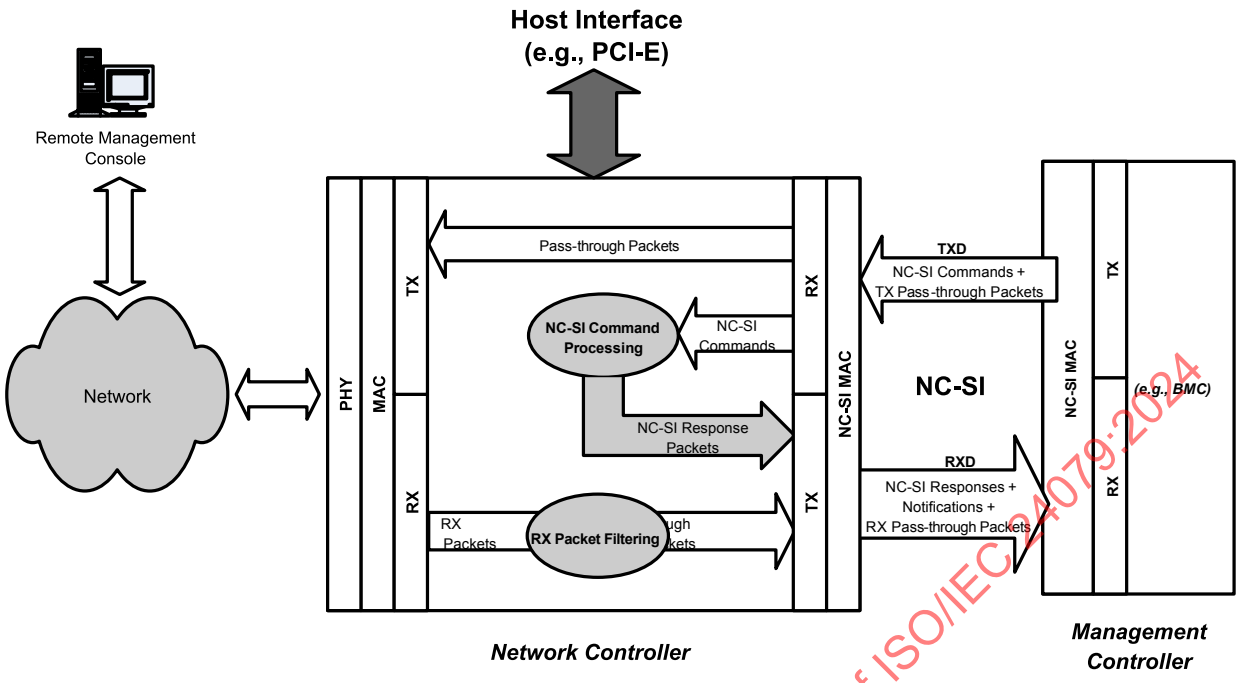

Figure 2 – NC-SI traffic flow diagram

NC-SI is intended to operate independently from the in-band activities of the Network Controller. As such, the Sideband Interface is not specified to be accessible through the host interface of the Network Controller. From the external world, this interface should behave and operate like a standard Ethernet Interface.

5.1.2 Defined topologies

The topologies supported under this specification apply to the case in which a single Management Controller is actively communicating with one or more Network Controllers over NC-SI RBT. The electrical specification is targeted to directly support up to four physical Network Controller packages. The protocol specification allows up to eight Network Controller packages, with up to 31 channels per package.

Figure 3 illustrates some examples of Network Controller configurations supported by the NC-SI in the current release:

- Configuration 1 shows a Management Controller connecting to a single Network Controller with a single external network connection.
- Configuration 2 shows a Management Controller connecting to a Network Controller package that supports two NC-SI channels connections.
- Configuration 3 shows a Management Controller connecting to four discrete Network Controllers.

STANDARDSISO.COM : Click to view the full PDF of ISO/IEC 24079:2024

© ISO/IEC 2024 – All rights reserved

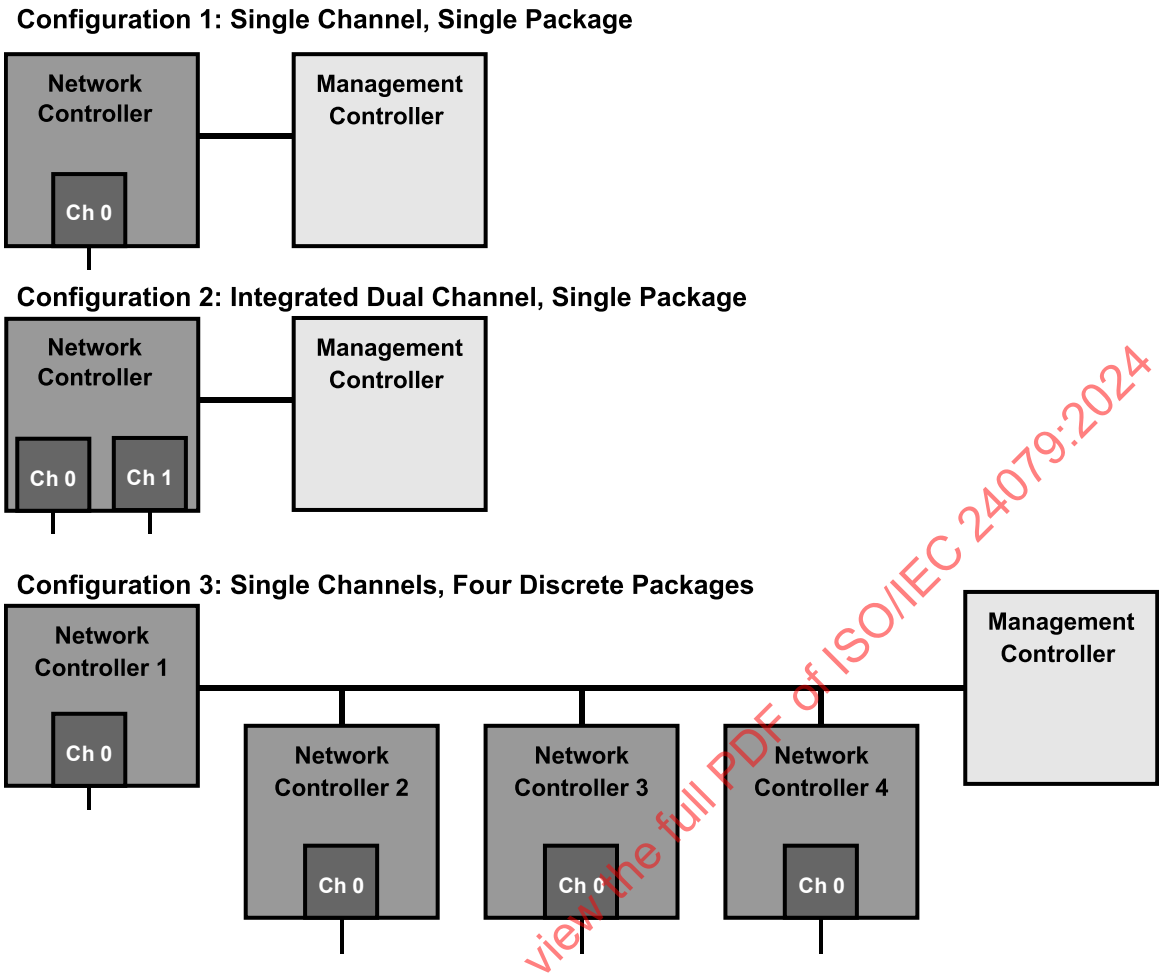

Figure 3 – Example topologies supported by the NC-SI

STANDARDSISO.COM : Click to view the full PDF of ISO/IEC 24079:2024

5.1.3 Single and integrated Network Controller implementations

This clause illustrates the general relationship between channels, packages, receive buffers, and bus buffers for different controller implementations.

An integrated controller is a Network Controller that connects to the NC-SI and provides NC-SI support for two or more network connections. A single controller is a controller that supports only a single NC-SI channel.

For the *NC-SI Specification*, an integrated controller can be logically implemented in one of three basic ways, as illustrated in Figure 4. Although only two channels are shown in the illustration, an integrated controller implementation can provide more than two channels. The example channel and package numbers (for example, channel 0, pkg 0) refer to the Internal Channel and Package ID subfields of the Channel ID. For more information, see 5.2.2.9.

© ISO/IEC 2024 – All rights reserved

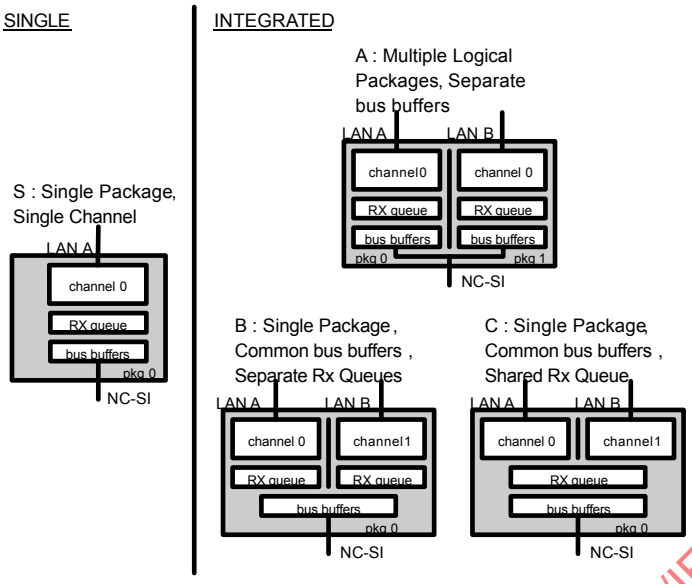

Figure 4 – Network Controller integration options

Packages that include multiple channels are required to handle internal arbitration between those channels and the NC-SI. The mechanism by which this occurs is vendor- specific and not specified in this document. This internal arbitration is always active by default. No NC-SI commands are defined for enabling or disabling internal arbitration between channels.

The following classifications refer to a logical definition. The different implementations are distinguished by their behavior with respect to the NC-SI bus and command operation. The actual physical and internal implementation can vary from the simple diagrams. For example, an implementation can act as if it has separate RX queues without having physically separated memory blocks for implementing those queues.

- **S: Single Package, Single Channel**

  This implementation has a single NC-SI interface providing NC-SI support for a single LAN port, all contained within a package or module that has a single connection to the NC-SI physical bus.

- **A: Multiple Logical Packages, Separate Bus Buffers**

  This implementation acts like two physically separate Network Controllers that happen to share a common overall physical container. Electrically, they behave as if they have separate electrical buffers connecting to the NC-SI bus. This behavior might be accomplished by means of a passive internal bus or by separate physical pins coming from the overall package. From the point of view of the Management Controller and the NC-SI command operation, this implementation behaves as if the logical controllers were implemented as physically separate controllers.

  This type of implementation could include internal hardware arbitration between the two logical Network Controller packages. If hardware arbitration is provided external to the package, it shall meet the requirements for hardware arbitration described later in this specification. (For more information, see 5.3.3.)

STANDARDSISO.COM : Click to view the full PDF of ISO/IEC 24079:2024

© ISO/IEC 2024 – All rights reserved

- **B: Single Package, Common Bus Buffers, Separate RX Queues**

  In this implementation, the two internal NC-SI channels share a common set of electrical bus buffers. A single Deselect Package command will deselect the entire package. The Channel Enable and Channel Disable commands to each channel control whether the channel can transmit Pass-through and AEN packets through the NC-SI interface. The Channel Enable command also determines whether the packets to be transmitted through the NC-SI interface will be queued up in an RX Queue for the channel while the channel is disabled or while the package is deselected. Because each channel has its own RX Queue, this queuing can be configured for each channel independently.

- **C: Single Package, Common Bus Buffers, Shared RX Queue**

  This implementation is the same as described in the preceding implementation, except that the channels share a common RX Queue for holding Pass-through packets to be transmitted through the NC-SI interface. This queue could also queue up AEN or Response packets.

5.1.4 Transport stack

Figure 5 illustrates the overall transport stack of the NC-SI. The lowest level is the physical-level interface (for example, RBT), and the media-level interface is based on Ethernet. Above these interfaces are the two data-level protocols that are supported by the *NC-SI Specification*: NC-SI Command Protocol and the Network Data Protocol (for example, ARP, IP, DHCP, and NetBIOS) associated with Pass-through traffic. Both of these protocols are independent from binding to the underlying physical interface. This specification only defines the binding for NC-SI over RBT.

This document defines the necessary NC-SI command set and interface specification that allows the appropriate configuration of the Network Controller parameters and operation to enable network traffic to flow to and from external networks to the Management Controller. As Figure 5 shows, the scope of the NC-SI Command Protocol is limited to the internal interface between the Network Controller and the Management Controller.

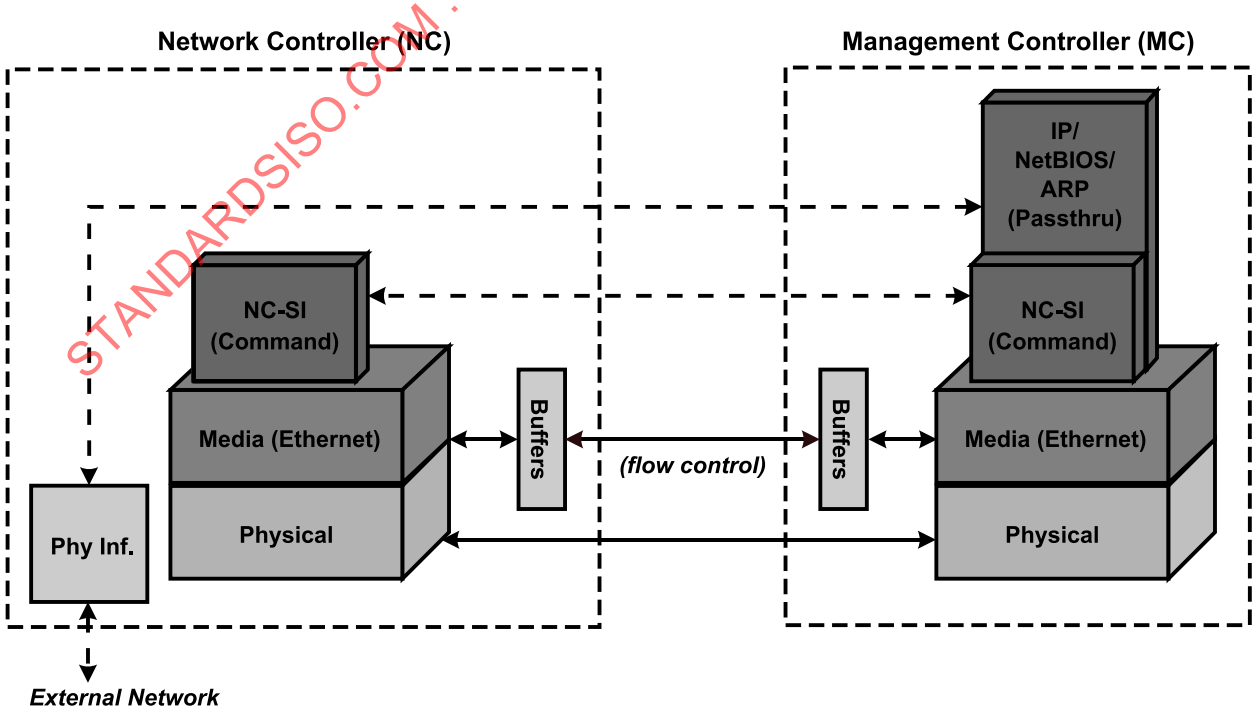

Figure 5 – NC-SI transport stack

STANDARDSISO.COM : Click to view the full PDF of ISO/IEC 24079:2024

© ISO/IEC 2024 – All rights reserved

5.1.5 Transport protocol

A simple transport protocol is used to track the reliable reception of command packets. The transport protocol is based upon a command/response paradigm and involves the use of unique Instance IDs (IIDs) in the packet headers to allow responses received to be matched to previously transmitted commands. The Management Controller is the generator of command packets sent to the Sideband Interface of one or more Network Controllers in the system, and it receives response packets from them. A response packet is expected to be received for every command packet successfully sent.

The transport protocol described here shall apply only to command and response packets sent between the Management Controller and the Network Controller.

5.1.6 Byte and bit ordering for transmission

Unless otherwise specified, the bytes for a multi-byte numeric field are transmitted most significant byte first and bits within a byte are transmitted most significant bit first.

5.2 Operational behaviors

5.2.1 Typical operational model

This clause describes the typical system-level operation of the NC-SI components.

The following tasks are associated with Management Controller use of the NC-SI:

- **Initial configuration**

  When the NC-SI interface is first powered up, the Management Controller needs to discover and configure NC-SI devices in order to enable pass-through operation. This task includes setting parameters such as MAC addresses, configuring Layer 2 filtering, setting Channel enables, and so on.

- **Pass-through**

  The Management Controller handles transmitting and receiving Pass-through packets using the NC-SI. Pass-through packets can be delivered to and received from the network through the NC-SI based on the Network Controller's NC-SI configuration.

- **Asynchronous event handling**

  In certain situations, a status change in the Network Controller, such as a Link State change, can generate an asynchronous event on the Sideband Interface. These event notifications are sent to the Management Controller where they are processed as appropriate.

- **Error handling**

  The Management Controller handles errors that could occur during operation or configuration. For example, a Network Controller might have an internal state change that causes it to enter a state in which it requires a level of reconfiguration (this condition is called the "Initial State," described in more detail in 5.2.2.4); or a data glitch on the NC-SI could have caused an NC-SI command to be dropped by the Network Controller, requiring the Management Controller to retry the command.

STANDARDSISO.COM : Click to view the full PDF of ISO/IEC 24079:2024

© ISO/IEC 2024 – All rights reserved

5.2.2 State definitions

5.2.2.1 General

Table 2 describes states related to whether and when the Network Controller is ready to handle NC-SI command packets, when it is allowed to transmit packets through the NC-SI interface, and when it has entered a state where it is expecting configuration by the Management Controller.

Table 2 – NC-SI operating state descriptions

State	Applies to	Description
Interface Power Down	Package	The NC-SI is in the power down state.
Interface Power Up	Package	The NC-SI is in the power up state, as clause 5.6 defines.
Package Selected (also referred to as the Selected state)	Package	A Selected package is allowed to turn on its electrical buffers and transmit through the NC-SI interface.
Package Deselected (also referred to as the Deselected state)	Package	A Deselected package is not allowed to turn on its electrical buffers and transmit through the NC-SI interface.
Hardware Arbitration Enabled	Package	When hardware arbitration is enabled, the package is allowed to transmit through the NC-SI interface only when it is Selected and has the TOKEN op-code.
Hardware Arbitration Disabled	Package	When hardware arbitration is disabled, the package is allowed to transmit through the NC-SI interface anytime that it is Selected, regardless of whether it has the TOKEN op-code.
Package Ready	Package	In the Package Ready state, the package is able to accept and respond to NC-SI commands for the package and be selected.
Package Not Ready	Package	The Package Not Ready state is a transient state in which the package does not accept package-specific commands.
Channel Ready	Channel	In the Channel Ready state, a channel within the package is able to accept channel-specific NC-SI commands that are addressed to its Channel ID (Package ID + Internal Channel ID).
Channel Not Ready	Channel	The Channel Not Ready state is a transient state in which the channel does not accept channel-specific commands.
Initial State	Channel	In the Initial State, the channel is able to accept and respond to NC-SI commands, and one or more configuration settings for the channel need to be set or restored by the Management Controller (that is, the channel has not yet been initialized, or has encountered a condition where one or more settings have been lost and shall be restored). See 5.2.2.4 for more information.
Channel Enabled	Channel	This is a sub-state of the Channel Ready state. When a channel is enabled, the channel is allowed to transmit unrequested packets (that is, packets that are not command responses—for example, AEN and Pass-through packets) through the NC-SI interface whenever the package is Selected.
Channel Disabled	Channel	This is a sub-state of the Channel Ready state. When a channel is disabled, the channel is not allowed to transmit unrequested packets (that is, packets that are not command responses—for example, AEN and Pass-through packets) through the NC-SI interface.

STANDARDSISO.COM : Click to view the full PDF of ISO/IEC 24079:2024

© ISO/IEC 2024 – All rights reserved

5.2.2.2 NC-SI power states

The NC-SI defines only two power states:

- **NC-SI Interface Power Down state**

  In this state, the NC-SI Physical interface and the associated receive and transmit buffers in all devices on the NC-SI (that is, the NC-SI interfaces on the Network Controllers and Management Controller) are not powered up.

- **NC-SI Power Up state**

  In this state, the NC-SI Physical interface and the associated receive and transmit buffers in all devices on the NC-SI (that is, the Network Controller and Management Controller) are powered up. The Network Controller is expected to transition to the Initial State within T4 seconds after the Power Up state is entered.

5.2.2.3 Package Ready state

A Network Controller in the Package Ready state shall be able to respond to any NC-SI commands that are directed to the ID for the overall package (versus being directed to a particular channel within the package). Package-specific commands are identified by a particular set of Channel ID values delivered in the command header (see 5.2.2.9).

5.2.2.4 Initial State

The Initial State for a channel corresponds to a condition in which the NC-SI is powered up and is able to accept NC-SI commands, and the channel has one or more configuration settings that need to be set or restored by the Management Controller.

Unless this specification explicitly defines the default configuration settings, the default values are implementation specific. The MC should not make any assumptions on any configuration settings that this specification does not define. Because this state may be entered at any time, the Initial State shall be acknowledged with a Clear Initial State command in order for the Initial State to be exited. This requirement helps to ensure that the Management Controller does not continue operating the interface unaware that the NC-SI configuration had autonomously changed in the Network Controller.

An NC-SI channel in the Initial State shall:

- be able to respond to NC-SI commands that are directed to the Channel ID for the particular channel (see 5.2.2.9)
- respond to all non-OEM command packets that are directed to the channel with a Response Packet that contains a Response Code of “Command Failed” and a Reason Code of “Initialization Required”

  NOTE This requirement does not apply to commands that are directed to the overall package, such as the Select Package and Deselect Package commands.

- place the channel into the Disabled state
- set hardware arbitration (if supported) to “enabled” on Interface Power Up only; otherwise, the setting that was in effect before entry into the Initial State shall be preserved (that is, the hardware arbitration enable/disable configuration is preserved across entries into the Initial State)

STANDARDSISO.COM : Click to view the full PDF of ISO/IEC 24079:2024

© ISO/IEC 2024 – All rights reserved

- set the enabled/disabled settings for the individual MAC and VLAN filters (typically set using the Set MAC Address, Set VLAN Filter, and Enable VLAN commands) to “disabled”

  NOTE It is recommended that global multicast and broadcast filters are “disabled” in the Initial State. This means that all multicast and broadcast traffic is forwarded to the MC in the Initial State. If the implementation does not have the global multicast or broadcast filters in “disabled” state in the Initial State, the MC might need to explicitly set global multicast and/or broadcast filters prior to enabling receiving pass-through traffic from the NC-SI channel.

- reset the counters defined in the Get NC-SI Statistics command and the Get NC-SI Pass-through Statistics command to `0x0`

- disable transmission of Pass-through packets onto the network

  NOTE Upon entry into the Initial State, the Channel Network TX setting is also set to “disabled”.

- clear any record of prior command instances received upon entry into the Initial State (that is, assume that the first command received after entering the Initial State is a new command and not a retried command, regardless of any Instance ID that it may have received before entering the Initial State)

- disable transmission of AENs

Otherwise, there is no requirement that other NC-SI configuration settings be set, retained, or restored to particular values in the Initial State.

5.2.2.5 NC-SI Initial State recovery

As 5.2.2.4 describes, a channel in the Initial State shall receive the Clear Initial State command before other commands can be run.

This requirement ensures that if the Initial State is entered asynchronously, the Management Controller is made aware that one or more NC-SI settings may have changed without its involvement, and blocks the Management Controller from issuing additional commands under that condition.

Until the channel receives the Clear Initial State command, the Management Controller shall respond to any other received command (except the Select Package and Deselect Package commands) with a Command Failed response code and Interface Initialization Required reason code to indicate that the Clear Initial State command shall be sent. See response and reason code definitions in 5.4.2.5.

NOTE Package commands (for example, Select Package and Deselect Package) are always accepted and responded to normally regardless of whether the Channel is in the Initial State.

If the Management Controller, at any time, receives the response indicating that the Clear Initial State command is expected, it should interpret this response to mean that default settings have been restored for the channel (per the Initial State specification), and that one or more channel settings needs to be restored by the Management Controller.

5.2.2.6 State transition diagram

Figure 6 illustrates the general relationship between the package- and channel-related states described in Table 2 and the actions that cause transitions between the states. Each bubble in Figure 6 represents a particular combination of states as Table 2 defines.

STANDARDSISO.COM : Click to view the full PDF of ISO/IEC 24079:2024

© ISO/IEC 2024 – All rights reserved

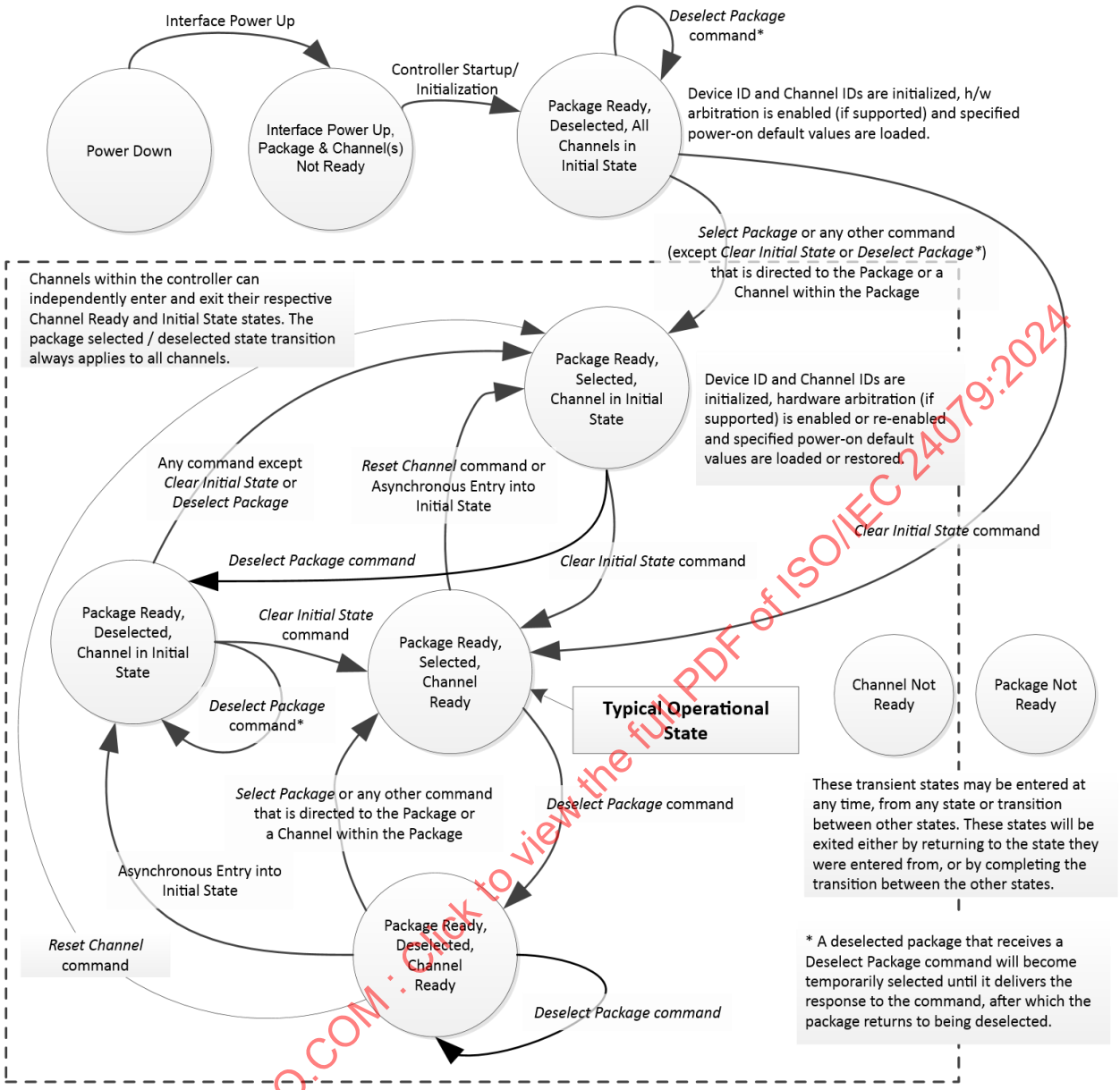

Figure 6 – NC-SI operational state diagram

STANDARDSISO.COM : Click to view the full PDF of ISO/IEC 24079:2024

5.2.2.7 State diagram for NC-SI operation with hardware arbitration

Figure 7 shows NC-SI operation in the hardware arbitration mode of operation. This is a sub-set of the general NC-SI operational state diagram (Figure 6) and has been included to illustrate the simplified sequence of package selection when this optional capability is used.

© ISO/IEC 2024 – All rights reserved

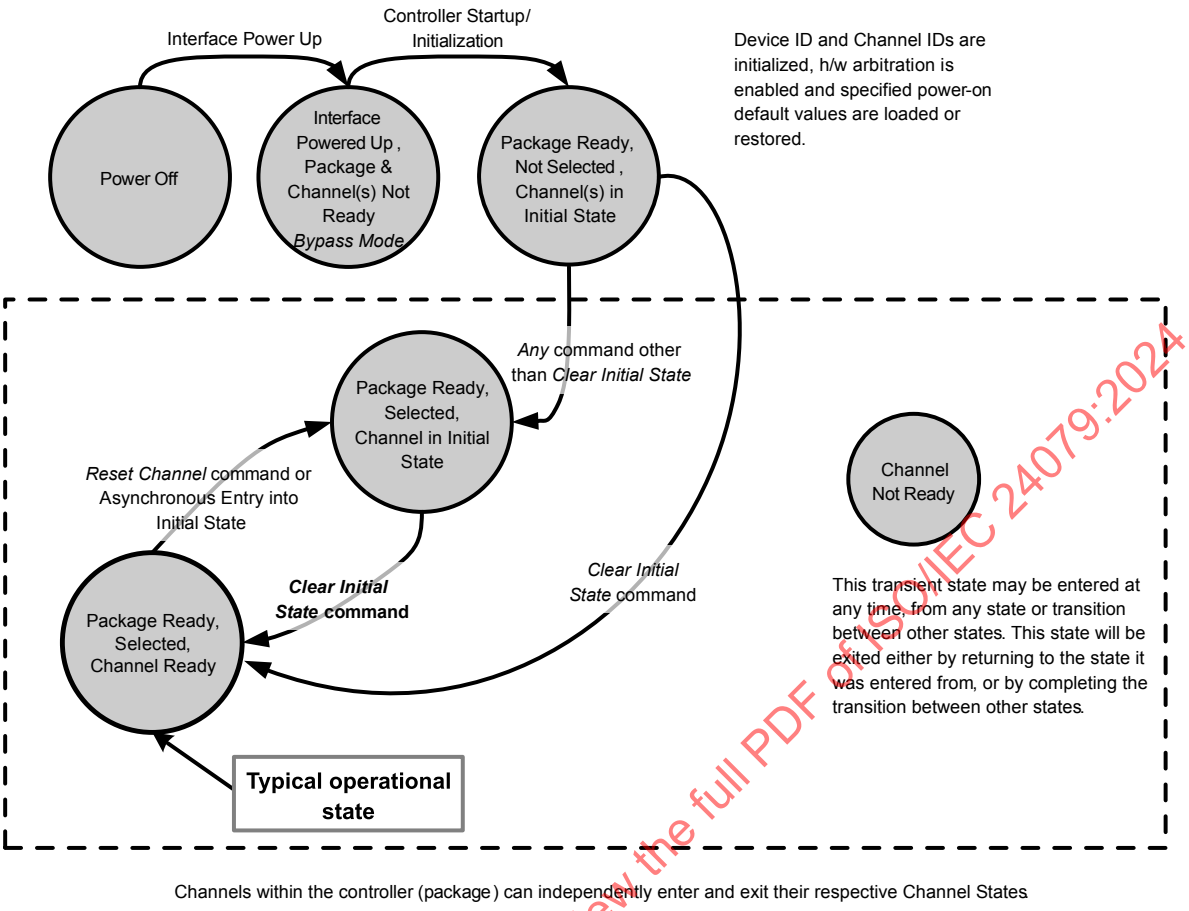

Figure 7 – NC-SI operational state diagram for hardware arbitration operation

STANDARDSISO.COM : Click to view the full PDF of ISO/IEC 24079:2024

While Figure 7 does not show Select and Deselect package commands, these commands can be used with the HW arbitration and will behave as specified in this specification.

Select and Deselect package commands can work together with HW arbitration. If HW arbitration is enabled, a package needs both the HW arbitration token and to be selected in order to transmit on the NC-SI. If either the package is deselected or the package does not have HW arbitration token, then the package is not allowed to transmit on the NC-SI.

5.2.2.8 Resets

5.2.2.8.1 Asynchronous entry into Initial State

An Asynchronous Reset event is an event that results in a Channel asynchronously entering the Initial State. This event could occur as a consequence of powering up, a System Reset, a Driver Reset, an internal firmware error, loss of configuration errors, internal hardware errors, and so on.

Unless otherwise specified, NC-SI configuration settings beyond those required by the Initial State may or may not be preserved following asynchronous entry into the Initial State, depending on the Network Controller implementation.

© ISO/IEC 2024 – All rights reserved

There is no explicit definition of a Reset for an entire package. However, it is possible that an Asynchronous Reset condition may cause an asynchronous entry into the Initial State for all Channels in a package simultaneously.

5.2.2.8.2 Synchronous Reset

A Synchronous Reset event on the NC-SI is a Reset Channel command issued by a Management Controller to a Channel. Upon the receipt of this command, the Network Controller shall place the Channel into the Initial State.

Unless otherwise specified, NC-SI configuration settings beyond those required by the Initial State may or may not be preserved following a Synchronous Reset, depending on the Network Controller implementation.

5.2.2.8.3 Other Resets

Resets that do not affect NC-SI operation are outside the scope of this specification.

5.2.2.9 Network Controller Channel ID

Each channel in the Network Controller shall be physically assigned a Network Controller Channel ID that will be used by the Management Controller to specify which Network Controller channel, of possibly many, it is trying to communicate. The Network Controller Channel ID shall be physically assignable (configured) at system-integration time based on the following specification.

It is the system integrator's or system designer's responsibility to correctly assign and provide these identifier values in single- and multi-port Network Controller configurations, and to ensure that Channel IDs do not conflict between devices sharing a common NC-SI interconnect.

The Channel ID field comprises two subfields, Package ID and Internal Channel ID, as Table 3 describes.

Channel IDs shall be completely decoded. Aliasing between values is not allowed (that is, the Network Controller is not allowed to have multiple IDs select the same channel on a given NC-SI).

Table 3 – Channel ID format

Bits	Field name	Description
[7..5]	Package ID	The Package ID is required to be common across all channels within a single Network Controller that share a common NC-SI physical interconnect. The system integrator will typically configure the Package IDs starting from 0 and increasing sequentially for each physical Network Controller. The Network Controller shall allow the least significant two bits of this field to be configurable by the system integrator, with the most significant bit of this field = `0b`. An implementation is allowed to have all three bits configurable.
[4..0]	Internal Channel ID	The Network Controller shall support Internal Channel IDs that are numbered starting from 0 and increasing sequentially for each Pass-through channel supported by the Network Controller that is accessible by the Management Controller through the NC-SI using NC-SI commands. An implementation is allowed to support additional configuration options for the Internal Channel ID as long as the required numbering can be configured. An Internal Channel ID value of `0x1F` applies to the entire Package.

Once configured, the settings of the Package ID and Internal Channel ID values shall be retained in a non-volatile manner. That is, they shall be retained across power-downs of the NC-SI and shall not be required to be restored by the Management Controller for NC-SI operation. This specification does not define the mechanism for

STANDARDSISO.COM : Click to view the full PDF of ISO/IEC 24079:2024

© ISO/IEC 2024 – All rights reserved

configuring or retaining the Package ID or the Internal Channel ID (if configurable). Some implementations may use pins on the Network Controller for configuring the IDs, other implementations may use non-volatile storage logic such as electrically-erasable memory or FLASH, while others may use a combination of pins and non-volatile storage logic.

5.2.2.10 Configuration-related settings

5.2.2.10.1 Package-specific operation

Only two configuration settings are package-specific:

- the enable/disable settings for hardware arbitration
- NC-SI flow control

Hardware arbitration is enabled or disabled through a parameter that is delivered using the Select Package command. If hardware arbitration is enabled on all Network Controller packages on the NC-SI, more than one package can be in the Selected state simultaneously. Otherwise, only one package is allowed to be in the Selected state at a time in order to prevent electrical buffer conflicts (buffer fights) that can occur from more than one package being allowed to drive the bus.

NC-SI flow control is enabled or disabled using the Set NC-SI Flow Control command. The flow control setting applies to all channels in the package.

Package-specific commands should only be allowed and executed when the Channel ID field is set to `0x1F`.

5.2.2.10.2 Channel-specific operation

Channel-specific commands should only be allowed to be executed when the Channel ID field is set to a value other than `0x1F`. Channel-specific commands with Invalid Channel IDs should not be allowed or executed.

Table 4 shows the major categories of configuration settings that control channel operation when a channel is in the Channel Ready state.

Table 4 – Channel Ready state configuration settings

Setting/Configuration category	Description
"Channel Enable" settings	The Enable Channel and Disable Channel commands are used to control whether the channel is allowed to asynchronously transmit unrequested packets (AEN and Pass-through packets) through the NC-SI interface whenever the package is Selected. Note that channels are always allowed to transmit responses to commands sent to the channel.
Pass-through Transmit Enable settings	The Enable Channel Network TX command is used to enable the channel to transmit any Pass-through packets that it receives through the NC-SI onto the network, provided that the source MAC address in those packets matches the Network Controller settings. Correspondingly, the Disable Channel Network TX command is used to direct the controller not to transmit Pass-through packets that it receives onto the network.
AEN Enable settings	The AEN Enable command is used to enable and disable the generation of the different AENs supported by the Network Controller.
MAC Address Filter settings and control	The Set MAC Address, Enable Broadcast Filter, and Enable Global Multicast Filter commands are used to configure the filters for unicast, broadcast, and multicast addresses that the controller uses in conjunction with the VLAN Filter settings for filtering incoming Pass-through packets.

STANDARDSISO.COM : Click to view the full PDF of ISO/IEC 24079:2024

© ISO/IEC 2024 – All rights reserved

Setting/Configuration category	Description
VLAN Filter settings and control	The Set VLAN Filter command is used to configure VLAN Filters that the controller uses in conjunction with the MAC Address Filters for filtering incoming Pass-through packets. The Enable VLAN and Disable VLAN commands are used to configure VLAN filtering modes and enable or disable whether VLAN filtering is used.

5.2.2.11 Transmitting Pass-through packets from the Management Controller

Packets not recognized as command packets (that is, packets without the NC-SI EtherType) that are received on the Network Controller's NC-SI interface shall be assumed to be Pass-through packets provided that the source MAC Address matches one of the unicast MAC addresses settings (as configured by the Set MAC Address command) for the channel in the Network Controller, and will be forwarded for transmission to the corresponding external network interface if Channel Network TX is enabled.

5.2.2.12 Receiving Pass-through packets for the Management Controller

The Management Controller has control over and responsibility for configuring packet-filtering options, such as whether broadcast, multicast, or VLAN packets are accepted. Depending on the filter configurations, after the channel has been enabled, any packet that the Network Controller receives for the Management Controller shall be forwarded to the Management Controller through the NC-SI interface.

5.2.2.13 Startup sequence examples

5.2.2.13.1 Overview

The following clauses show possible startup sequences that may be used by the Management Controller to start NC-SI operation. Depending upon the specific configuration of each system, there are many possible variations of startup sequences that may be used, and these examples are intended for reference only.

5.2.2.13.2 Typical non hardware arbitration specific startup sequence

The following sequence is provided as an example of one way a Management Controller can start up NC-SI operation. This sequence assumes that the Management Controller has no prior knowledge of how many Network Controllers are hooked to its NC-SI, or what capabilities those controllers support. Note that this is not the only possible sequence. Alternative sequences can also be used to start up NC-SI operation. Some steps may be skipped if the Management Controller has prior knowledge of the Network Controller capabilities, such as whether Network Controllers are already connected and enabled for hardware arbitration.

1. **Power up**

   The NC-SI is powered up (see 5.6.2.7 for the specification of this condition). The Network Controller packages are provided a Device Ready Interval during which they can perform internal firmware startup and initialization to prepare their NC-SI to accept commands. The Management Controller first waits for the maximum Device Ready Interval to expire (see Table 119).

   At this point, all the Network Controller packages and channels should be ready to accept commands through the NC-SI. (The Management Controller may also start sending commands before the Device Ready Interval expires but will have to handle the case that Network Controller devices may be in a state in which they are unable to accept or respond to commands.)

STANDARDSISO.COM : Click to view the full PDF of ISO/IEC 24079:2024

© ISO/IEC 2024 – All rights reserved

2. Discover package

The Management Controller issues a Select Package command starting with the lowest Package ID (see 5.4.4.5 for more information). Because the Management Controller is assumed to have no prior knowledge of whether the Network Controller is enabled for hardware arbitration, the Select Package command is issued with the Hardware Arbitration parameter set to `disable`.

If the Management Controller receives a response within the specified response time, it can record that it detected a package at that ID. If the Management Controller does not receive a response, it is recommended that the Management Controller retry sending the command. Three total tries is typical. (This same retry process should be used when sending all commands to the Network Controller and will be left out of the descriptions in the following steps.)

If the retries fail, the Management Controller can assume that no Network Controller is at that Package ID and can immediately repeat this step 2 for the next Package ID in the sequence.

3. Discover and get capabilities for each channel in the package

The Management Controller can now discover how many channels are supported in the Network Controller package and their capabilities. To do this, the Management Controller issues the Clear Initial State command starting from the lowest Internal Channel ID (which selects a given channel within a package). If it receives a response, the Management Controller can then use the Get Version ID command to determine NC-SI specification compatibility, and the Get Capabilities command to collect information about the capabilities of the channel. The Management Controller can then repeat this step until the full number of internal channels has been discovered. (The Get Capabilities command includes a value that indicates the number of channels supported within the given package.)

NOTE The *NC-SI Specification* requires Network Controllers to be configurable to have their Internal Channel IDs be sequential starting from 0. If it is known that the Network Controller is configured this way, the Management Controller needs only to iterate sequentially starting from Internal Channel ID = 0 up to the number of channels reported in the first Get Capabilities response.

The Management Controller should temporarily retain the information from the Get Capabilities command, including the information that reports whether the overall package supports hardware arbitration. This information is used in later steps.

4. Repeat steps 2 and 3 for remaining packages

The Management Controller repeats steps 2 and 3 until it has gone through all the Package IDs.

IMPORTANT: Because hardware arbitration has not been enabled yet, the Management Controller shall issue a Deselect Package command to the present Package ID before issuing the Select Package command to the next Package ID. If hardware arbitration is not being used, only one package can be in the Selected state at a time. Otherwise, hardware electrical buffer conflicts (buffer fights) will occur between packages.

5. Initialize each channel in the package

Based on the number of packages and channels that were discovered, their capabilities, and the desired use of Pass-through communication, the Management Controller can initialize the settings for each channel. This process includes the following general steps for each package:

a. Issue the Select Package command.

b. For each channel in the package, depending on controller capabilities, perform the following actions. Refer to individual command descriptions for more information.

STANDARDSISO.COM : Click to view the full PDF of ISO/IEC 24079:2024

© ISO/IEC 2024 – All rights reserved

- Use the Set MAC Address command to configure which unicast and multicast addresses are used for routing Pass-through packets to and from the Management Controller.
- Use the Enable Broadcast Filter command to configure whether incoming broadcast Pass-through packets are accepted or rejected.
- Use the Enable Global Multicast Filter command to configure how incoming multicast Pass-through packets are handled based on settings from the Set MAC Address command.
- Use the Set VLAN Filter and Enable VLAN Filters commands to configure how incoming Pass-through packets with VLAN Tags are handled.
- Use the Set NC-SI Flow Control command to configure how Ethernet Pause Frames are used for flow control on the NC-SI.
- Use the AEN Enable command to configure what types of AEN packets the channel should send out on the NC-SI.
- Use the Enable Channel Network TX command to configure whether the channel is enabled to deliver Pass-through packets from the NC-SI to the network (based on the MAC address settings) or is disabled from delivering any Pass-through packets to the network.

c. Issue the Deselect Package command.

6. Enable hardware arbitration for the packages

If only a single Network Controller package is discovered, the Management Controller does not need to enable hardware arbitration if the controller hardware supports it. In fact, the Management Controller may always elect to disable hardware arbitration, because then it does not need to be concerned with whether the implementation provided a 'loop back' of the hardware arbitration 'ARB_OUT' signal to the controller to the 'ARB_IN' signal.

If multiple packages are detected, and each package has reported that it supports hardware arbitration, then the hardware arbitration operation can be enabled by issuing a Select Package command, with the Hardware Arbitration parameter for the command set to 'enabled', to each package. Because hardware arbitration enables multiple packages to be selected simultaneously, sending Deselect Package commands is not necessary when hardware arbitration is being used.

NOTE There is no mandatory status to indicate whether hardware arbitration is hooked up and operating correctly. In that case, the Management Controller needs to have prior knowledge that the implementation routes the hardware arbitration signals between the packages.

7. Start Pass-through packet and AEN operation on the channels

The channels should now have been initialized with the appropriate parameters for Pass-through packet reception and AEN operation. Pass-through operation can be started by issuing the Enable Channel command to each channel that is to be enabled for delivering Pass-through packets or generating AENs through the NC-SI interface.

If hardware arbitration is not operational and it is necessary to switch operation over to another package, a Deselect Package command shall be issued to the presently selected package before a different package can be selected. Deselecting a package blocks all output from the package. Therefore, it is not necessary to issue Disable Channel commands before selecting another package. There is no restriction on enabling multiple channels within a package.

5.2.2.13.3 Hardware arbitration specific startup sequence

This clause applies when multiple NCs are used by the MC. This clause only applies to the NC-SI over RBT binding.

STANDARDSISO.COM : Click to view the full PDF of ISO/IEC 24079:2024

© ISO/IEC 2024 – All rights reserved

The following is an example of the steps that a Management Controller may perform to start up NC-SI operation when Hardware Arbitration is specifically known to be used, present, and enabled on all Network Controllers. This example startup sequence assumes a high level of integration where the Management Controller knows the Network Controllers support and default to the use of Hardware Arbitration on startup but does not have prior knowledge of how many Network Controllers are interfaced to the NC-SI, or the full set of capabilities those controllers support, so discovery is still required.

Although other startup examples may show a specific ordering of steps for the process of discovering, configuring and enabling channels, the Management Controller actually has almost total flexibility in choosing how these steps are performed once a channel in a package is discovered. In the end, it would be just as valid for a Management Controller to follow a breadth-first approach to discovery steps as it would be to follow a depth-first approach where each channel that is discovered is fully initialized and enabled before moving to the next.

1. **Power up**

   No change from other startup scenarios.

2. **Discovery**

   The process of discovery consists of identifying the number of packages that are available, the number of channels that are available in each package, and for each channel, the capabilities that are provided for Management Controller use. Because, in this startup scenario, the Management Controller knows Hardware Arbitration is used, it is not required to use the *Select Package* and *Deselect Package* commands for discovery but may elect to just use the *Clear Initial State* command for this purpose instead.

   In this startup scenario, Packages and Channels are discovered by sending the *Clear Initial State* command starting with the lowest Package ID and Channel ID, then waiting for, and recording, the response event as previously described. Internal channel IDs are required to be numbered sequentially starting with 0, so when the Management Controller does not receive a response to repeated attempts at discovery, it knows this means no additional channels exist in the current package.

   If this happens when the internal channel ID is 0, the Management Controller knows a package is not available at the current package ID, and it continues with the next package ID in sequence.

   If the Management Controller receives a response to the *Clear Initial State* command, it records that the channel and package are available, and continues discovery.

   During discovery, the Management Controller should interrogate the capabilities of each channel found to be available in each package by sending the *Get Capabilities* command appropriate package and channel ID values. However, it does not matter whether this is done as the very next step in the discovery process or performed for each channel after all packages and channels have been discovered, just as long as the Management Controller does interrogate each channel.

3. **Configure each channel and enable pass-through**

   Once the existence of all packages and channels, and the capabilities of each channel, have been discovered and recorded, the Management Controller shall initialize and enable each channel as needed for use. The details of these steps remain essentially the same as have been previously stated, except to note that there are no restrictions on how they are performed. What this means is that the MC may perform these steps in any order across the channels in each package as it sees fit. The MC may fully initialize and enable each channel in each package one at a time or perform the same step on each

STANDARDSISO.COM : Click to view the full PDF of ISO/IEC 24079:2024

© ISO/IEC 2024 – All rights reserved

channel in sequence before moving on to the next, or in a different order. The specific order of steps is not dictated by this specification.

5.2.2.13.4 Summary of scheme for the MC without prior knowledge of hardware arbitration

The following scheme describes the case when the MC does not have a priori knowledge of the hardware arbitration support across multiple NCs.

1. For each available NC,

    a. The MC checks whether a device supports the HW arbitration, using "**Get Capabilities**" commands (this implicitly selects the package).

    b. The MC issues "**Deselect Package**" for the NC (needed as at this stage we do not know whether all the devices support HW arbitration).

2. If (all NCs support HW arbitration and the HW arbitration is used by all NCs), then

    the MC assumes that HW arbitration is active because according to clause 6.2.4 "set hardware arbitration (if supported) to *enabled* on Interface Power Up only", and the MC can "Select" any number of packages at the same time.

    Otherwise (at least one NC reports that HW arbitration is not supported, or at least one NC reports that HW arbitration is not used, or at least one NC cannot report its support level)

    The HW arbitration is **not** active, and the MC can "Select" only single package at the any time.

    The MC configures each and every NC to disable HW arbitration, using the "***Select Package***" command.

STANDARDSISO.COM : Click to view the full PDF of ISO/IEC 24079:2024

© ISO/IEC 2024 – All rights reserved

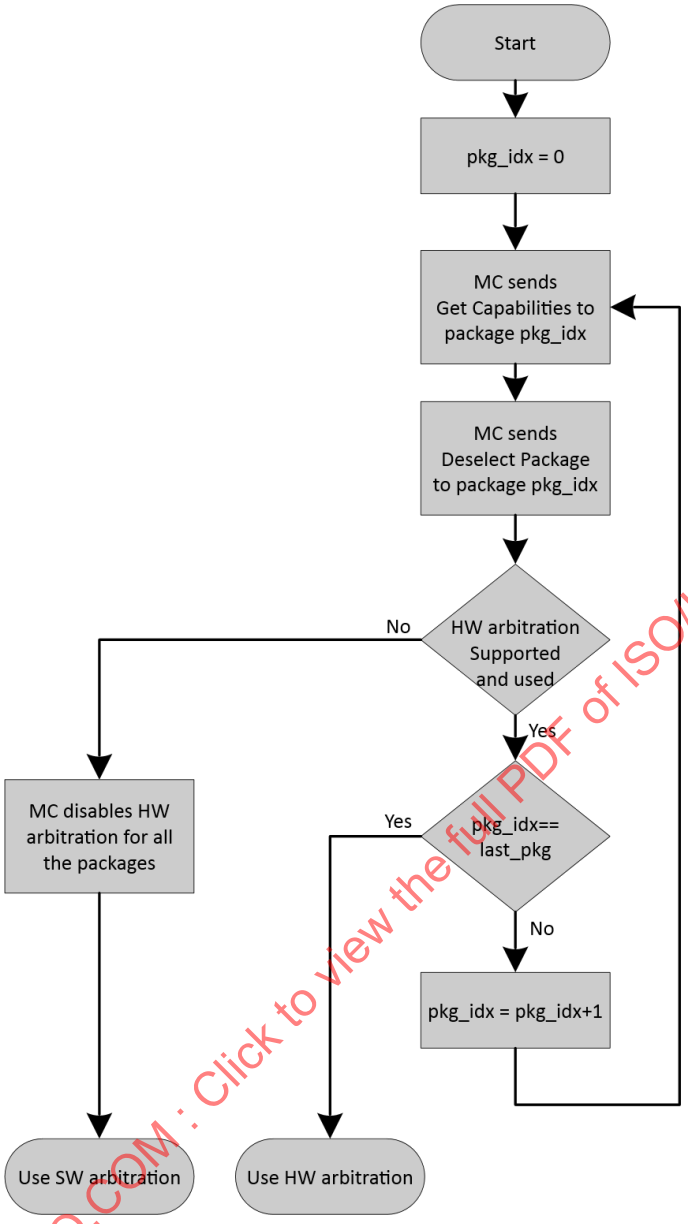

Figure 8 – MC steps when the MC does not have prior knowledge of hardware arbitration

STANDARDSISO.COM : Click to view the full PDF of ISO/IEC 24079:2024

5.2.3 NC-SI traffic types

5.2.3.1 Overview

Two types of traffic are carried on the NC-SI: Pass-through traffic and Control traffic.

- Pass-through traffic consists of packets that are transferred between the external network interface and the Management Controller using the NC-SI.
- Control traffic consists of commands (requests) and responses that support the configuration and control of the NC-SI and Pass-through operation of the Network Controller, and AENs that support reporting various events to the Management Controller.

© ISO/IEC 2024 – All rights reserved

5.2.3.2 Command protocol

5.2.3.2.1 Overview

Commands are provided to allow a Management Controller to initialize, control, and regulate Management Controller packet flow across the NC-SI, configure channel filtering, and to interrogate the operational status of the Network Controller. As interface master, the Management Controller is the initiator of all commands, and the Network Controller responds to commands.

5.2.3.2.2 Instance IDs

The command protocol uses a packet field called the Instance ID (IID). IID numbers are 8-bit values that shall range from `0x01` to `0xFF`. IIDs are used to uniquely identify instances of a command, to improve the robustness of matching responses to commands, and to differentiate between new and retried commands. The Network Controller that receives a command handles the IID in the following ways:

- It returns the IID value from the command in the corresponding response.
- If the IID is the same as the IID for the previous command, it recognizes the command as a 'retried' command rather than as a new instance of the command. It is expected that the 'retried' command contains the same command type value in the Control Packet Type field. The NC behavior when a 'retried' command type does not match the original command type is outside the scope of this specification.
- If a retried command is received, the Network Controller shall return the previous response. Depending on the command, the Network Controller can accomplish this either by holding the previous response data so that it can be returned, or, if re-executing the command has no side effects (that is, the command is idempotent), by re-executing the command operation and returning that response.
- When an IID value is received that is different from the one for the previous command, the Network Controller executes the command as a new command.
- When the NC-SI Channel first enters the Initial State, it clears any record of any prior requests. That is, it assumes that the first command after entering the Initial State is a new command and not a retried command, regardless of any IID that it may have received before entering the Initial State.

Thus, for single-threaded operation with idempotent commands, a responding Network Controller can simply execute the command and return the IID in the response that it received in the command. If it is necessary to not execute a retried command, the responding controller can use the IID to identify the retried command and return the response that was delivered for the original command.

The Management Controller that generates a command handles the IID in the following ways:

- The IID changes for each new instance of a command.
- If a command needs to be retried, the Management Controller uses the same value for the IID that it used for the initial command.
- The Management Controller can optionally elect to use the IID as a way to provide additional confirmation that the response is being returned for a particular command.

Because an AEN is not a response, an AEN always uses a value of `0x00` for its IID.

NOTE The Instance ID mechanism can be readily extended in the future to support multiple controllers and multiple outstanding commands. This extension would require having the responder track the IID on a per command and per requesting controller basis. For example, a retried command would be identified if the IID and command matched the IID and command for a prior command for the given originating controller's ID. That is, a match is made with the command,

STANDARDSISO.COM : Click to view the full PDF of ISO/IEC 24079:2024

© ISO/IEC 2024 – All rights reserved

originating controller, and IID fields rather than on the IID field alone. A requester that generates multiple outstanding commands would correspondingly need to track responses based on both command and IID in order to match a given response with a given command. IIDs need to be unique for the number of different commands that can be concurrently outstanding.

5.2.3.2.3 Single-threaded operation

The Network Controller is required to support NC-SI commands only in a single-threaded manner. That is, the Network Controller is required to support processing only one command at a time, and is not required to accept additional commands until after it has sent the response to the previous one.

Therefore, the Management Controller should issue NC-SI commands in a single-threaded manner. That is, the Management Controller should have only one command outstanding to a given Network Controller package at a time. Upon sending an NC-SI command packet, and before sending a subsequent command, the Management Controller should wait for the corresponding response packet to be received or a command timeout event to occur before attempting to send another command. For the full descriptions of command timeout, see 5.2.9.3.2.

5.2.3.2.4 Responses

The Network Controller shall process and acknowledge each validly formatted command received at the NC-SI interface by formatting and sending a valid response packet to the Management Controller through the NC-SI interface.

To allow the Management Controller to match responses to commands, the Network Controller shall copy the IID number of the Command into the Instance ID field of the corresponding response packet.

To allow for retransmission and error recovery, the Network Controller may re-execute the last command or maintain a copy of the response packet most recently transmitted to the Management Controller through its NC-SI interface. This “previous” response packet shall be updated every time a new response packet is transmitted to the Management Controller by replacing it with the one just sent.

The Network Controller response shall return a “Command Unsupported” response code with an “Unknown Command Type” reason code for any command (standard or OEM) that the Network Controller does not support or recognize.

5.2.3.2.5 Response and post-response processing

Typically, a Network Controller completes a requested operation before sending the response. In some situations, however, it may be useful for the controller to be allowed to queue up the requested operation and send the response assuming that the operation will complete correctly (for example, when the controller is requested to change link configuration). The following provisions support this process:

- A Network Controller is allowed to send a response before performing the requested action if the command is expected to complete normally and all parameters that are required to be returned with the response are provided.
- Temporal ordering of requested operations shall be preserved. For example, if one command updates a configuration parameter value and a following command reads back that parameter, the operation requested first shall complete so that the following operation returns the updated parameter.
- Under typical operation of the Network Controller, responses should be delivered within the Normal Execution Interval (T5) (see Table 119).

STANDARDSISO.COM : Click to view the full PDF of ISO/IEC 24079:2024

© ISO/IEC 2024 – All rights reserved

- Unless otherwise specified, all requested operations shall complete within the Asynchronous Reset/Asynchronous Not Ready interval (T6) following the response.
- If the Network Controller channel determines that the requested operation or configuration change has not been completed correctly after sending the response, the channel shall enter the Initial State.

5.2.3.2.6 NC-SI traffic ordering

This specification does not require any ordering between AENs, NC-SI responses, and NC-SI Pass-through packets. Specific transport binding specifications may require ordering between AENs, NC-SI responses, and NC-SI Pass-through packets.

5.2.4 Link configuration and control

5.2.4.1 Link Configuration

The Network Controller provides commands to allow the Management Controller to specify the auto-negotiation, link speed, duplex settings, and so on to be used on the network interface. For more information, see 5.4.4.21. The Management Controller should make link configuration changes only when the host network driver is absent or non-operational.

5.2.4.2 Link Status

The Network Controller provides a Get Link Status command to allow the Management Controller to interrogate the configuration and operational status of the primary Ethernet links. The Management Controller may issue the Get Link Status command regardless of OS operational status.

5.2.5 Frame filtering for Pass-through mode

5.2.5.1 Overview

The Network Controller provides the option of configuring various types of filtering mechanisms for the purpose of controlling the delivery of received Ethernet frames to the Management Controller. These options include VLAN Tag filter, L2 address filters, MAC address support, and limited frame filtering using L3, L4 protocol header fields. All frames that pass frame filtering are forwarded to the Management Controller over the NC-SI. See RFC2373, RFC2461, and RFC3315 for IPv6-related definitions.

5.2.5.2 Multicast filtering

The Network Controller may provide commands to allow the Management Controller to enable and disable global filtering of all multicast packets. The Network Controller may optionally provide one or more individual multicast filters, as well as DHCP v6, IPv6 Neighbor Advertisement, IPv6 Router Advertisement, IPv6 Neighbor Solicitation, and IPv6 MLD filters.

STANDARDSISO.COM : Click to view the full PDF of ISO/IEC 24079:2024

© ISO/IEC 2024 – All rights reserved

5.2.5.3 Broadcast filtering

The Network Controller provides commands to allow the Management Controller to enable and disable forwarding of Broadcast and ARP packets. The Network Controller may optionally support selective forwarding of broadcast packets for specific protocols, such as DHCP (see RFC2131) and NetBIOS.

5.2.5.4 VLAN filtering

The Network Controller provides commands to allow the Management Controller to enable and disable VLAN filtering, configure one or more VLAN Filters, and to configure VLAN filtering modes.

STANDARDSISO.COM : Click to view the full PDF of ISO/IEC 24079:2024

© ISO/IEC 2024 – All rights reserved

Figure 9 illustrates the flow of frame filtering. Italicized text in the figure is used to identify NC-SI command names.

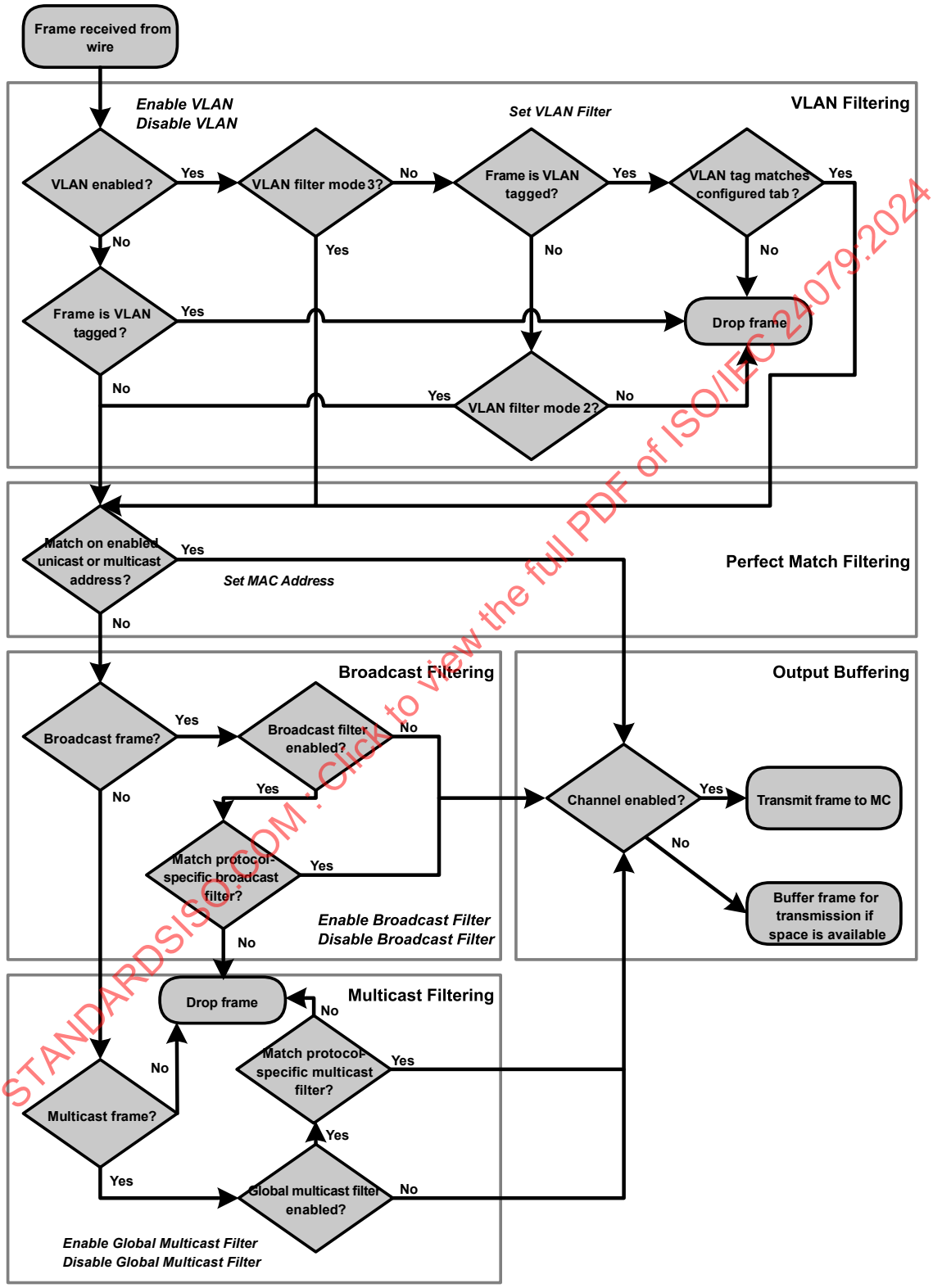

Figure 9 – NC-SI packet filtering flowchart

STANDARDSISO.COM : Click to view the full PDF of ISO/IEC 24079:2024

© ISO/IEC 2024 – All rights reserved

5.2.6 Output buffering behavior

There are times when the NC is not allowed to transmit Pass-through, AEN, or control packets onto the NC-SI.

The NC should buffer Pass-through frames to be transmitted to the MC under any of the following conditions:

- The package is deselected.
- For a channel within a package while that channel is disabled.
- When the hardware arbitration is enabled and the NC does not have the token to transmit frames to the MC.

The NC may buffer AENs to the MC under any of the above conditions.

Control packets (responses) are buffered when hardware arbitration is enabled and the NC does not have the token to transmit frames to the MC.

Additionally, while an NC-SI channel is in the Initial State, previously received Pass-through frames and AENs may or may not be buffered. This behavior is outside the scope of this specification.

5.2.7 NC-SI flow control

The Network Controller may provide commands to enable flow control on the NC-SI between the Network Controller and the Management Controller. The NC-SI flow control behavior follows the PAUSE frame behavior as the IEEE 802.3 specification defines. Flow control is configured using the Set NC-SI Flow command (see 5.4.4.41).

5.2.8 Asynchronous Event Notification

Asynchronous Event Notification (AEN) packets enable the Network Controller to deliver unsolicited notifications to the Management Controller when certain status changes that could impact interface operation occur in the Network Controller. Because the NC-SI is a small part of the larger Network Controller, its operation can be affected by a variety of events that occur in the Network Controller. These events include link status changes, OS driver loads and unloads, and chip resets. This feature defines a set of notification packets that operate outside of the established command-response mechanism.

Control over the generation of the AEN packets is achieved by control bits in the AEN Enable command. Each type of notification is optional and can be independently enabled by the Management Controller.

AENs are not acknowledged, and there is no protection against the possible loss of an AEN packet. Each defined event has its own AEN packet. Because the AEN packets are generated asynchronously by the Network Controller, they cannot implement some of the features of the other Control packets. AEN packets leverage the general packet format of Control packets.

- The originating Network Controller channel shall fill in its Channel ID (Ch. ID) field in the command header to identify the source of notification.
- The IID field in an AEN shall be set to `0x00` to differentiate it from a response or command packet.
- The Network Controller shall copy the AEN MC ID field from the AEN Enable command into the MC ID field in every AEN sent to the Management Controller.

STANDARDSISO.COM : Click to view the full PDF of ISO/IEC 24079:2024

© ISO/IEC 2024 – All rights reserved

5.2.9 Error handling

5.2.9.1 Overview

This clause describes the error-handling methods that are supported over the NC-SI. The two types of error-handling methods are:

- Synchronous Error Handling
- Errors that trigger Asynchronous Entry into the Initial State

Synchronous Error Handling occurs when an Error (non-zero) Response/Reason Code is received in response to a command issued by the Management Controller. For information about response and reason codes, see 5.4.2.5.

Asynchronous Entry into the Initial State Error Handling occurs when the Network Controller asynchronously enters the Initial State because of an error condition that affects NC-SI configuration or a failure of a command that was already responded to. For more information, see 5.2.2.8.1.

5.2.9.2 Transport errors

5.2.9.2.1 Dropped control packets

The Network Controller shall drop control packets received on the NC-SI interface only under the following conditions:

- The packet has an invalid Frame Check Sequence (FCS) value.
- Frame length does not meet IEEE 802.3 requirements (except for OEM commands, where accepting larger packets may be allowed as a vendor-specific option).
- The packet checksum (if provided) is invalid.
- The NC-SI Channel ID value in the packet does not match the expected value.
- The Network Controller does not have resources available to accept the packet.
- The Network Controller receives a command packet with an incorrect header revision.

The Network Controller may also drop control packets if an event that triggers Asynchronous Entry into the Initial State causes packets to be dropped during the transition.

5.2.9.2.2 Pass-through packet errors

Handling of Pass-through packet errors, other than logging statistics, is out of scope of this specification.

5.2.9.3 Missing responses

5.2.9.3.1 Overview

There are typical scenarios in which the Management Controller does not receive the response to a command:

- The Network Controller dropped the command and thus never sent the response.
- The response was dropped by the Management Controller (for example, because of a CRC error in the response packet).

STANDARDSISO.COM : Click to view the full PDF of ISO/IEC 24079:2024

© ISO/IEC 2024 – All rights reserved

- The Network Controller is in the process of being reset or is disabled.

The Management Controller can detect a missing response packet as the occurrence of an NC-SI command timeout event.

5.2.9.3.2 Command timeout

The Management Controller may detect missing responses by implementing a command timeout interval. The timeout value chosen by the Management Controller shall not be less than Normal Execution Interval, T5. Upon detecting a timeout condition, the Management Controller should not make assumptions on the state of the unacknowledged command (for example, the command was dropped or the response was dropped), but should retransmit (retry) the previous command using the same IID it used in the initial command.

The Management Controller should try a command at least three times before assuming an error condition in the Network Controller.

It is possible that a Network Controller could send a response to the original command at the same time a retried command is being delivered. Under this condition, the Management Controller could get more than one response to the same command. Thus, the Management Controller should be capable of determining that it has received a second instance of a previous response packet. Dropped commands may be detected by the Management Controller as a timeout event waiting for the response.

5.2.9.3.3 Handling dropped commands or missing responses

To recover from dropped commands or missing responses, the Management Controller can retransmit the unacknowledged command packet using the same IID that it used for the initial command.

The Network Controller shall be capable of reprocessing retransmitted (retried) commands without error or undesirable side effects. The Network Controller can determine that the command has been retransmitted by verifying that the IID is unchanged from the previous command.

5.2.9.4 Detecting Pass-through traffic interruption

The Network Controller might asynchronously enter the Initial State because of a reset or other event. In this case, the Network Controller stops transmitting Pass-through traffic on the RXD lines. Similarly, Pass-through traffic sent to the Network Controller may be dropped. If the Management Controller is not in the state of sending or receiving Pass-through traffic, it may not notice this condition. Thus, the Management Controller should periodically issue a command to the Network Controller to test whether the Network Controller has entered the Initial State. How often this testing should be done is a choice of the Management Controller.

5.3 Arbitration in configurations with multiple Network Controller packages

5.3.1 Overview

This clause applies to NC-SI over RBT only. More than one Network Controller package on a RBT interface can be enabled for transmitting packets to the Management Controller. This specification defines two mechanisms to accomplish Network Controller package arbitration operations. One mechanism uses software commands provided by the Network Controller for the Management Controller to control whose turn it is to transmit traffic. The other mechanism uses hardware arbitration to share the single RBT bus. Implementations are required to support command-based Device Selection operation; the hardware arbitration method is optional.

STANDARDSISO.COM : Click to view the full PDF of ISO/IEC 24079:2024

© ISO/IEC 2024 – All rights reserved

5.3.2 Architecture

Figure 10 is a simplified block diagram of the Sideband Interface being used in a multi-drop configuration.

The RMII (upon which NC-SI is based) was originally designed for use as a point-to-point interconnect. Accordingly, only one party can transmit data onto the bus at any given time. There is no arbitration protocol intrinsic in the RMII to support managing multiple transmitters.

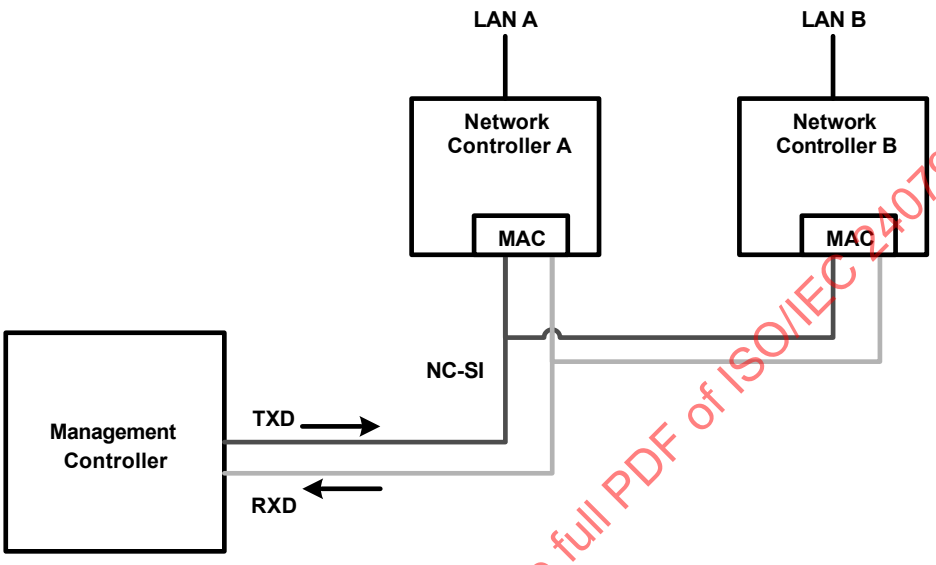

Figure 10 – Basic multi-drop block diagram

However, it is possible for multiple Network Controllers on the interface to be able to simultaneously *receive* traffic from the Management Controller that is being transmitted on the NC-SI TXD lines. The Network Controllers can receive commands from the Management Controller without having to arbitrate for the bus. This facilitates the Management Controller in delivering commands for setup and configuration of arbitration.

Arbitration allows multiple Network Controller packages that are attached to the interface to be enabled to share the RXD lines to deliver packets to the Management Controller.

This operation is summarized as follows:

- Only one Network Controller at a time can transmit packets on the RXD lines of the interface.
- Network Controllers can accept commands for configuring and controlling arbitration for the RXD lines.

5.3.3 Hardware arbitration

To prevent two or more NC-SI packages from transmitting at the same time, a hardware-based arbitration scheme was devised to allow only one Network Controller package to drive the RX lines of the shared interface at any given time. This scheme uses a mechanism of passing messages (op-codes) between Network Controller packages to coordinate when a controller is allowed to transmit through the NC-SI RBT interface.

5.3.3.1 General

Three conceptual modes of hardware arbitration exist: arbitration master assignment, normal operation, and bypass. After a package is initialized and has its Channel IDs assigned, it enters the arbitration master assignment

STANDARDSISO.COM : Click to view the full PDF of ISO/IEC 24079:2024

© ISO/IEC 2024 – All rights reserved

mode. This mode assigns one package the role of an Arbitration Master (ARB_Master) that is responsible for initially generating a TOKEN op-code that is required for the normal operating mode. In the normal operating mode, the TOKEN op-code is passed from one package to the next in the ring. The package is allowed to use the shared RXD signals and transmit if the package has received the TOKEN op-code and has a packet to send.

Bypass mode allows hardware arbitration op-codes to pass through a Network Controller package before it is initialized. Bypass mode shall be in effect while hardware arbitration is disabled. Bypass mode shall be exited and arbitration master assignment mode shall be entered when the hardware arbitration becomes enabled or re-enabled.

Hardware-based arbitration requires two additional pins (ARB_IN and ARB_OUT*)* on the Network Controller. The ARB_OUT pin of one package is connected to the ARB_IN pin of the next package to form a ring configuration, as Figure 11 illustrates. The timing requirements for hardware arbitration are designed to accommodate a maximum of four Network Controller packages. If the implementation consists of a single Network Controller package, the ARB_OUT pin may be connected to the ARB_IN pin on the same package, or may be left disconnected, in which case hardware arbitration should be disabled by using the Select Package command. This specification optionally supports reporting of Hardware arbitration implementation status and hardware arbitration status using the **Get Capabilities** command.

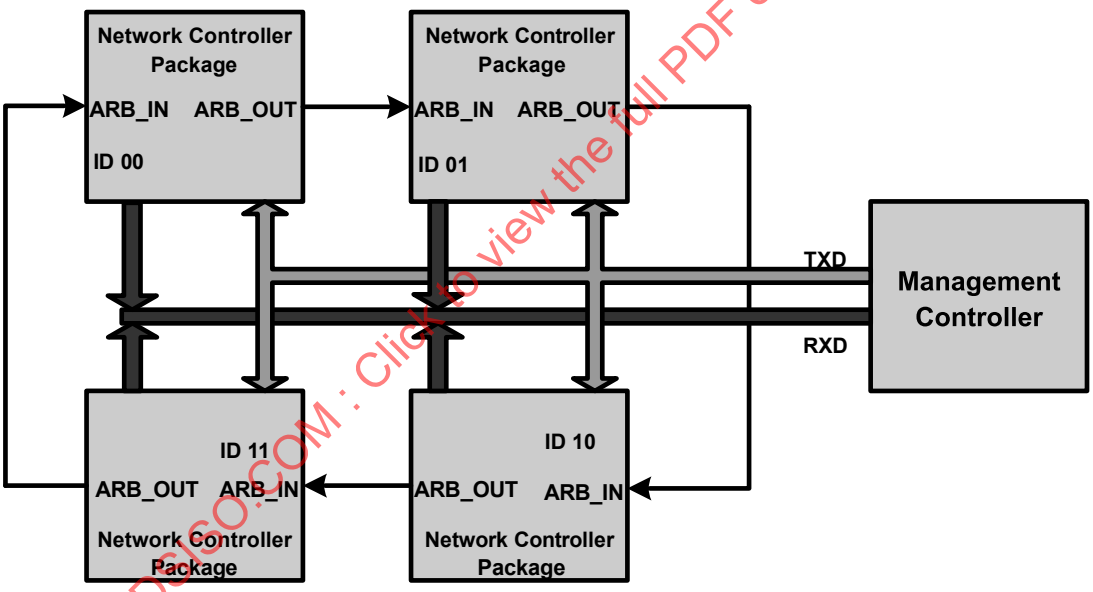

Figure 11 – Multiple Network Controllers in a ring format

Each Network Controller package sends out pulses on the ARB_OUT pin to create a series of symbols that form op-codes (commands) between Network Controllers. Each pulse is one clock wide and synchronized to REF_CLK.

The hardware arbitration data bits follow the same timing specifications used for the TXD and RXD data bits (see 5.6.2.6). The pulses are di-bit encoded to ensure that symbols are correctly decoded. Table 5. shows the values of the symbols.

While clause 5.3.3.2.1 allows for op-code to be truncated, it is recommended that the transmission of current op-code on ARB_OUT be completed if the HW arbitration mode is changed in the middle of an op-code transfer (or in the middle of a symbol).

STANDARDSISO.COM : Click to view the full PDF of ISO/IEC 24079:2024

© ISO/IEC 2024 – All rights reserved

Table 5 – Hardware arbitration di-bit encoding

Symbol name	Encoded value
Esync	11b
Ezero	00b
Eone	01b
Illegal symbol	10b

5.3.3.2 Hardware arbitration op-codes

The hardware-based arbitration feature has five op-codes: IDLE, TOKEN, FLUSH, XON, and XOFF. Each op-code starts with an Esync symbol and is followed by either E_{one} or E_{zero} symbols. Table 6 lists t\he legal op-codes.

Table 6 – Hardware arbitration op-code format

Op-Code	Format
IDLE	E_{sync} E_{zero} E_{zero} (110000b)
TOKEN	E_{sync} E_{one} E_{zero} (110100b)
FLUSH	E_{sync} E_{one} E_{one} E_{zero} E(Package_ID[2:0]) E_{zero} (11010100xxxxxx00b)
XOFF	E_{sync} E_{zero} E_{one} E_{zero} E_{zero} E_{zero} (110001000000b)
XON	E_{sync} E_{zero} E_{one} E_{one} E_{zero} E(Package_ID[2:0]) E_{zero} (1100010100uuuuuu00b)

5.3.3.2.1 Detecting truncated op-codes

A truncated op-code is detected when the number of clocks between E_{sync}s is less than the number of bits required for the op-code. Note that any additional bits clocked in after a legitimate op-code is detected do not indicate an error condition and are ignored until the next E_{sync}.

5.3.3.2.2 Handling truncated or illegal op-codes

When a Network Controller receives a truncated or illegal op-code, it should discard it.

5.3.3.2.3 Relationship of op-codes processing and driving the RX data lines

A Network Controller package shall take no more than T9 REF_CLK times after receiving the last bit of the op-code to decode the incoming op-code and start generating the outgoing op-code. This time limit allows for decoding and processing of the incoming op-code under the condition that an outgoing op-code transmission is already in progress.

A package that has received a TOKEN and has packet data to transmit shall turn on its buffer and begin transmitting the packet data within T11 REF_CLK times of receiving the TOKEN, as Figure 12 illustrates. The package shall disable the RXD buffers before the last clock of the transmitted TOKEN.

STANDARDSISO.COM : Click to view the full PDF of ISO/IEC 24079:2024

© ISO/IEC 2024 – All rights reserved

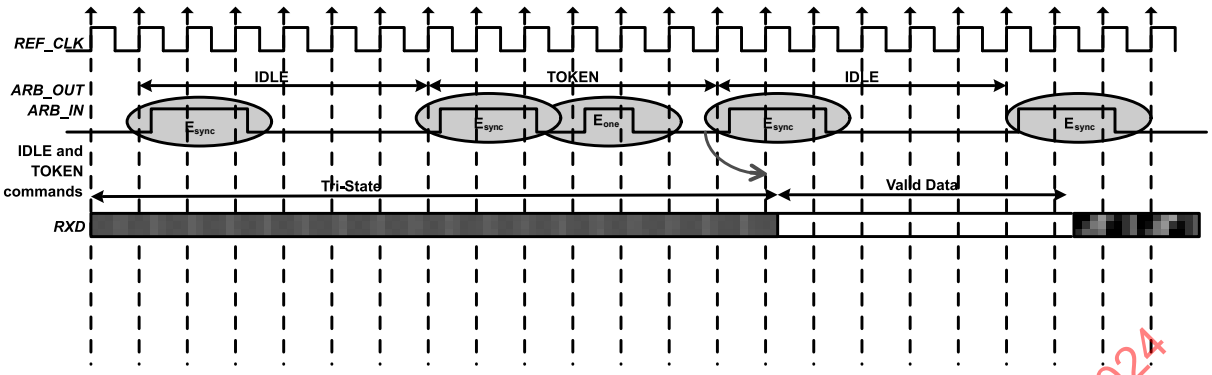

Figure 12 – Op-code to RXD relationship

5.3.3.3 Op-code operations

5.3.3.3.1 TOKEN op-code

When a TOKEN op-code is received, the Network Controller package may drive the RXD signals to send only one of the following items: a Pass-through packet, a command response, or an AEN. One IEEE 802.3 PAUSE frame (XON or XOFF) may also be sent either before or after one of the previous packets, or on its own. While the Network Controller package is transmitting the data on the RXD signals of the interface, it shall generate IDLE op-codes on its ARB_OUT pin. Once a package completes its transmission, if any, it shall generate and send the TOKEN on its ARB_OUT pin.

5.3.3.3.2 IDLE op-code

A package that has no other op-code to send shall continuously generate IDLE op-codes. Typically, a received IDLE op-code indicates that the TOKEN is currently at another package in the ring. This op-code is also used in the ARB_Master assignment process (for details, see 5.3.3.5).

5.3.3.3.3 FLUSH op-code

A FLUSH op-code is used to establish an Arbitration Master for the ring when the package enters the Package Ready state or when the TOKEN is not received within the specified timeout, T8. Clause 5.3.3.5 further explains this op-code.

If the package receives a FLUSH op-code while it is in the middle of transmitting a packet onto NC-SI, it shall generate IDLE op-codes until the transmission is complete and then process the FLUSH op-code as described.

5.3.3.3.4 Flow Control op-codes

The XON and XOFF op-codes are used to manage the generation of IEEE 802.3 PAUSE frames on = NC-SI RBT. If the Network Controller supports flow control and flow control is enabled, the XOFF and XON op-codes behave as described in this clause. If the Network Controller does not support flow control or if flow control is not enabled, the Network Controller shall pass the op-codes to the next package.

There may be a configuration where some NCs support flow control and others do not. In this configuration, an NC sending an XOFF op-code may see the XOFF packet emission delayed by two or more full size Pass-through

STANDARDSISO.COM : Click to view the full PDF of ISO/IEC 24079:2024

© ISO/IEC 2024 – All rights reserved

packets, one for each package not supporting XOFF when it gets the token, and one for the next package supporting XOFF before sending the XOFF packet.

The NC is not required to provide buffering to prevent packet loss in this configuration. No drop behavior should be expected by an MC only if all NCs have flow control enabled.

There is a maximum amount of time that the Network Controller is allowed to maintain a PAUSE. For more information, see 5.4.4.41.

5.3.3.3.5 XOFF op-code

A Network Controller package that becomes congested while receiving packets from the NC-SI shall perform the following actions:

- If it does not have a TOKEN, it sends the XOFF op-code to the next package.
- If it has the TOKEN and has not previously sent an XOFF frame for this instance of congestion, it shall send a single XOFF frame (PAUSE frame with a pause time of `0xFFFF`) and will not generate an XOFF op-code.
- A package may also regenerate an XOFF frame or op-code if it is still congested and determines that the present PAUSE frame is about to expire.

When a package on the ring receives an XOFF op-code, it shall perform one of the following actions:

- If it does not have a TOKEN op-code, it passes the XOFF op-code to the next package in the ring.
- If it has the TOKEN, it shall send an XOFF frame (PAUSE frame with a pause time of `0xFFFF`) and will not regenerate the XOFF op-code. If it receives another XOFF op-code while sending the XOFF frame or a regular network packet, it discards the received XOFF op-code.

5.3.3.3.6 XON op-code

XON frames (PAUSE frame with a pause time of `0x0000`) are used to signal to the Management Controller that the Network Controller packages are no longer congested and that normal traffic flow can resume. XON op-codes are used between the packages to coordinate XON frame generation. The package ID is included in this op-code to provide a mechanism to verify that every package is not congested before sending an XON frame to the Management Controller.

The XON op-code behaves as follows:

- When a package is no longer congested, it generates an XON op-code with its own Package ID. This puts the package into the 'waiting for its own XON' state.
- A package that receives the XON op-code takes one of the following actions:
  - If it is congested, it replaces the received XON op-code with the IDLE op-code. This action causes the XON op-code to be discarded. Eventually, the congested package generates its own XON op-code when it exits the congested state.
  - If the package is not congested and is not waiting for the XON op-code with own Package ID, it forwards the received XON op-code to the next package in the ring.
  - If the received XON op-code contains the package's own Package ID, the op-code should be discarded.
  - If the package is not congested and is waiting for its own XON op-code, it performs one of the following actions:

STANDARDSISO.COM : Click to view the full PDF of ISO/IEC 24079:2024

- If it receives an XON op-code with a Package ID that is higher than its own, it replaces the XON op-code with its own Package ID.
- If it receives an XON op-code with a Package ID lower than its own, it passes that XON op-code to the next package and it exits the 'waiting for its own XON' state.
- If it receives an XON op-code with the Package ID equal to its own, it sends an XON frame on the NC-SI when it receives the TOKEN op-code and exits the 'waiting for its own XON' state.

NOTE More than one XON op-code with the same Package ID can be received while waiting for the TOKEN and while sending the XON frame. These additional XON op-codes should be discarded.

- If a package originates an XON op-code but receives an XOFF op-code, it terminates its XON request so that it does not output an XON frame when it receives the TOKEN.

  NOTE This behavior is not likely to occur because the Management Controller will be in the Pause state at this point.

- A package that generated an XON op-code may receive its own XON op-code back while it has the TOKEN op-code. In this case, it may send a regular packet (Pass-through, command response, or AEN) to the Management Controller (if it has one to send), an XON frame, or both.

5.3.3.4 Bypass mode

When the Network Controller package is in bypass mode, data received on the ARB_IN pin is redirected to the ARB_OUT pin within the specified clock delay. This way, arbitration can continue between other devices in the ring.

A package in bypass mode shall take no more than T10 REF_CLK times to forward data from the ARB_IN pin to the ARB_OUT pin. The transition in and out of bypass mode may result in a truncated op-code.

A Network Controller package enters into bypass mode immediately upon power up and transitions out of this mode after the Network Controller completes its startup/initialization sequence.

5.3.3.5 Hardware arbitration startup

Hardware arbitration startup works as follows:

1. All the packages shall be in bypass mode within T_{pwrz} seconds of NC-SI power up.
2. As each package is initialized, it shall continuously generate FLUSH op-codes with its own Package ID.
3. The package then participates in the ARB_MSTR assignment process described in the following clause.

5.3.3.6 ARB_MSTR assignment

ARB_MSTR assignment works as follows:

1. When a package receives a FLUSH op-code with a Package ID numerically smaller than its own, it shall forward on the received FLUSH op-code. If the received FLUSH op-code's Package ID is numerically larger than the local Package ID, the package shall continue to send its FLUSH op-code with its own Package ID. When a package receives a FLUSH op-code with its own Package ID, it becomes the master of the ring (ARB_MSTR).
2. The ARB_MSTR shall then send out IDLE op-codes until it receives an IDLE op-code.

STANDARDSISO.COM : Click to view the full PDF of ISO/IEC 24079:2024

© ISO/IEC 2024 – All rights reserved

3. Upon receiving the IDLE op-code, the ARB_MSTR shall be considered to be in possession of the TOKEN op-code (see 5.3.3.3.1).

4. If the package receives a FLUSH op-code while it is in the middle of transmitting a packet onto NC-SI, it shall generate IDLE op-codes until the transmission is complete and then process the FLUSH op-code as described.

5.3.3.7 Token timeout mechanism

Each Network Controller package that supports hardware-based arbitration control shall implement a timeout mechanism in case the TOKEN op-code is not received. When a package has a packet to send, it starts its timer. If it does not receive a TOKEN prior to the TOKEN timeout, the package shall send a FLUSH op-code. This restarts the arbitration process.

The timer may be programmable depending on the number of packages in the ring. The timeout value is designed to accommodate up to four packages, each sending the largest packet (1536 bytes) plus possible XON or XOFF frame transmission and op-code processing time. The timeout shall be no fewer than T8 cycles of the REF_CLK.

5.3.3.8 Timing considerations

The ARB_OUT and ARB_IN pins shall follow the timing specifications outlined in clause 5.6.

To improve the efficiency of the multi-drop NC-SI, TOKEN op-code generation may overlap the Inter Packet Gap (IPG) that the 802.3 specification defines, as Figure 13 shows. The TOKEN op-code shall be sent no earlier than the last T13 REF_CLK cycles of the IPG.

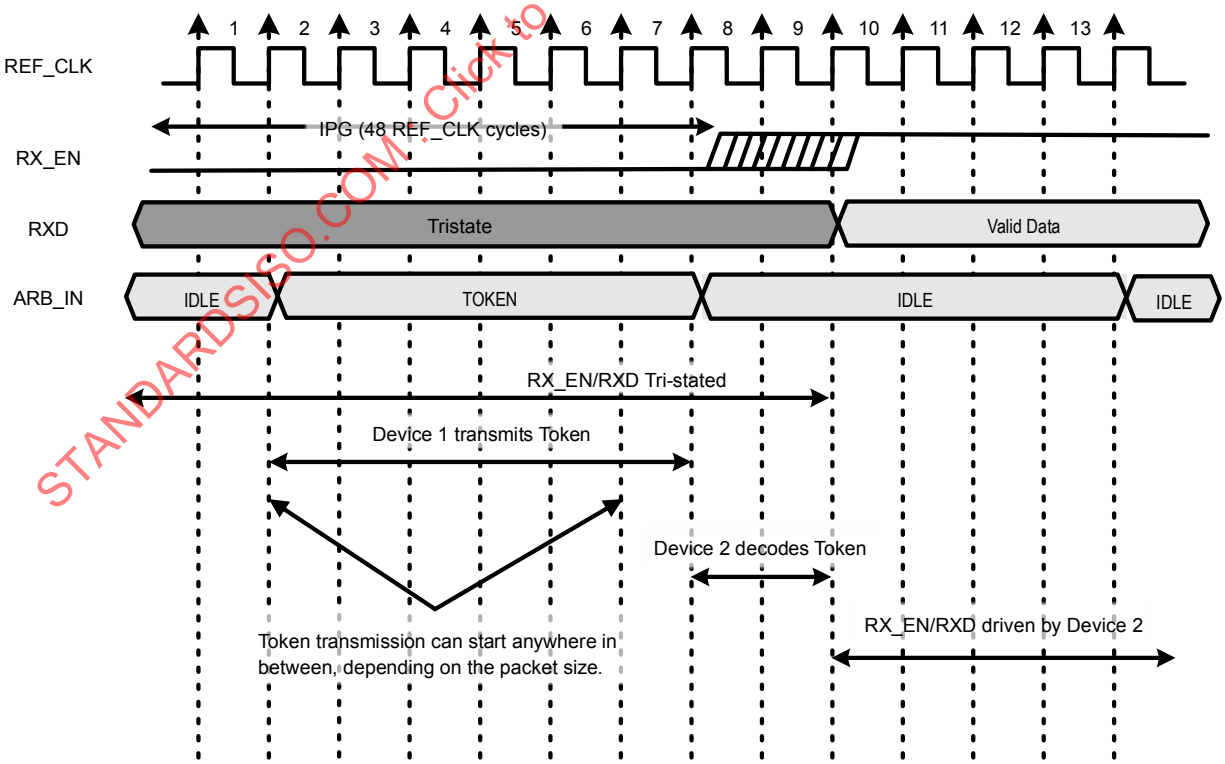

Figure 13 – Example TOKEN to transmit relationship

STANDARDSISO.COM : Click to view the full PDF of ISO/IEC 24079:2024

5.3.3.9 Example hardware arbitration state machine

Figure 14 shows the state machine diagram, which provides a guideline to help illustrate the startup process and op-code operations described in the preceding clauses.

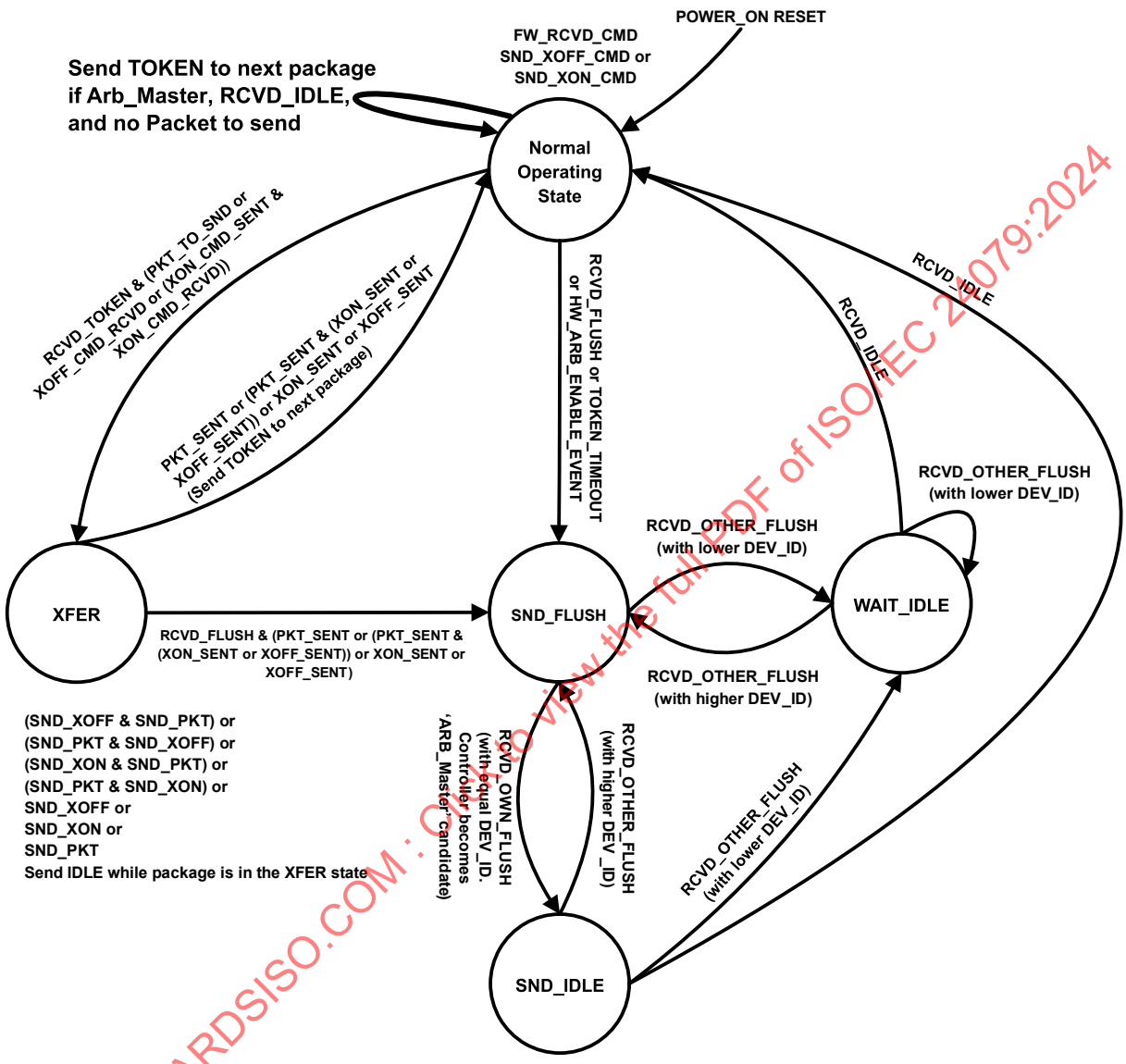

Figure 14 – Hardware arbitration state machine

STANDARDSISO.COM : Click to view the full PDF of ISO/IEC 24079:2024

© ISO/IEC 2024 – All rights reserved

Table 7 and Table 8, respectively, describe the states and events that Figure 14 shows.

Table 7 – Hardware arbitration states

State	Action
Normal Operating State	This state is the normal operating state for hardware arbitration. The following actions happen in this state: • FW_RCVD_CMD: Forward received command. As op-codes are received and acted upon, the resulting op-code is sent to the next package. For example, the TOKEN op-code is received and no packet data is available to send, so the TOKEN op-code is sent to the next package in the ring. • SND_XOFF_CMD: Send the XOFF op-code to the next package. This action happens when the specific conditions are met as described in 5.3.3.3. • SND_XON_CMD: Send the XON op-code to the next package. This action happens when the specific conditions are met as described in 5.3.3.3. • If the Network Controller is ARB_Master, it generates the TOKEN op-code upon receiving an IDLE op-code at the end of the FLUSH process. • The RXD lines will be in a high-impedance condition in this state.
XFER	In this state, data is sent on the RXD lines. This data will be a Pass-through packet, response packet, XON (Pause Off) packet, XOFF (Pause On) packet, or AEN. (An XON or XOFF packet can be sent in addition to a Pass-through packet, response packet, or AEN.) IDLE op-codes are sent to the next package while the device is in the XFER state. The following actions happen in this state: • SND_XON: Transmit an XON frame (Pause Off) to the Management Controller. • SND_XOFF: Transmit an XOFF frame (Pause On) to the Management Controller. • SND_PKT: Transmit a Pass-through packet, response packet, or AEN to the Management Controller. • The TOKEN op-code is sent to the next package upon completion of the transfer.
SND_FLUSH	This state is the entry point for determining the ARB_Master among the packages. In this state, the FLUSH op-code is continuously sent. This state is exited upon receiving a FLUSH op-code that has a DEV_ID that is equal to the package's own DEV_ID.
SND_IDLE	This is the final state for determining the ARB_Master, entered when a device's own FLUSH op-code is received. In this state, the IDLE op-code is continuously sent.
WAIT_IDLE	This state is entered when a FLUSH command is received from another package with a lower Device ID. When an IDLE op-code is received, the ARB_Master has been determined and the device transitions to the Normal Operating State.

Table 8 – Hardware arbitration events

Event	Description
RCVD_TOKEN	A TOKEN op-code was received or the arbitration was just completed and won by this package.
RCVD_IDLE	An IDLE op-code was received.
XOFF_SENT	The Pause On frame was sent on the RXD interface.
XON_SENT	The Pause Off frame was sent on the RXD interface.
PKT_TO_SND	The Network Controller package has a Pass-through packet, command response packet, XON (Pause Off) frame, XOFF (Pause On) frame, or AEN to send.
XON_CMD_RCVD	A package received an XON op-code with its own Package ID.
XOFF_CMD_RCVD	An XOFF op-code was received.
XON_CMD_SENT	A package sent an XON op-code with its own Package ID.
RCVD_FLUSH	A FLUSH op-code was received.

STANDARDSISO.COM : Click to view the full PDF of ISO/IEC 24079:2024

© ISO/IEC 2024 – All rights reserved

Event	Description
TOKEN_TIMEOUT	The timeout limit expired while waiting for a TOKEN op-code.
HW_ARB_ENABLE_EVENT	This event begins ARB_MSTR assignment. This event occurs just after the Network Controller package initializes or when hardware arbitration is re-enabled through the Select Package command.
RCVD_OTHER_FLUSH	A package received a FLUSH op-code with a Package ID other than its own.
RCVD_OWN_FLUSH	A package received a FLUSH op-code with a Package ID equal to its own.

5.3.4 Command-based arbitration

If hardware arbitration is not being used, the **Select Package** and **Deselect Package** commands shall be used to control which Network Controller package has the ability to transmit on the RXD lines. Because only one Network Controller package is allowed to transmit on the RXD lines, the Management Controller shall only have one package in the selected state at any given time. For more information, see 5.4.4.5 and 5.4.4.7.

5.4 Packet definitions

5.4.1 NC-SI packet encapsulation

The NC-SI is an Ethernet interface adhering to the standard IEEE 802.3 Ethernet frame format. Whether or not the Network Controller accepts runt packets is unspecified.

As Figure 15 shows, this L2, or data link layer, frame format encapsulates all NC-SI packets, including Pass-through, command, and response packets, as the L2 frame payload data by adding a 14-byte header to the front of the data and appending a 4-byte Frame Check Sequence (FCS) to the end.

NC-SI control packets shall not include any VLAN tags. NC-SI Pass-through may include 802.1Q VLAN tag.

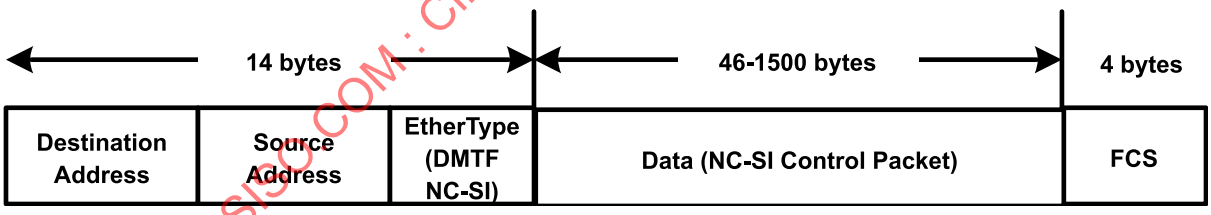

Figure 15 – Ethernet frame encapsulation of NC-SI packet data without VLAN tag

5.4.1.1 Ethernet frame header

The Management Controller shall format the 14-byte Ethernet frame header so that when it is received, it shall be formatted in the big-endian byte order that Table 9 shows.

Channels shall accept pass-through packets that meet the IEEE 802.3 frame requirements.

STANDARDSISO.COM : Click to view the full PDF of ISO/IEC 24079:2024

© ISO/IEC 2024 – All rights reserved

Table 9 – Ethernet header format

	Bits			
Bytes	**31..24**	**23..16**	**15..08**	**07..00**
00..03	DA_5= `0xFF`	DA_4= `0xFF`	DA_3= `0xFF`	DA_2= `0xFF`
04..07	DA_1= `0xFF`	DA_0= `0xFF`	SA_5	SA_4
08..11	SA_3	SA_2	SA_1	SA_0
12..13	EtherType = `0x88F8` (DMTF NC-SI)			

5.4.1.1.1 Destination Address (DA)

Bytes 0– 5 of the header represent bytes 5– 0 of the Ethernet Destination Address field of an L2 header.

The channel is not assigned a specific MAC address and the contents of this field are not interpreted as a MAC address by the Management Controller or the Network Controller. However, the DA field in all NC-SI control packets shall be set to the broadcast address (`FF:FF:FF:FF:FF:FF`) for consistency.

If the Network Controller receives a control packet with a Destination Address other than `FF:FF:FF:FF:FF:FF`, the Network Controller may elect to accept the packet, drop it, or return a response packet with an error response/reason code.

5.4.1.1.2 Source Address (SA)

Bytes 6– 11 of the header represent bytes 5– 0 of the Ethernet Source Address field of the Ethernet header. The contents of this field may be set to any value. The Network Controller should use `FF:FF:FF:FF:FF:FF` as the source address for NC-SI Control packets that it generates.

5.4.1.1.3 EtherType

The final two bytes of the header, bytes 12..13, represent bytes 1..0 of the EtherType field of the Ethernet header. For NC-SI Control packets, this field shall be set to a fixed value of `0x88F8` as assigned to NC-SI by the IEEE. This value allows NC-SI Control packets to be differentiated from other packets in the overall packet stream.

5.4.1.2 Frame Check Sequence

The Frame Check Sequence (FCS) shall be added at the end of the frame to provide detection of corruption of the frame. Any frame with an invalid FCS shall be discarded.

5.4.1.3 Data length

NC-SI Commands, Responses, and AENs do not carry any VLAN tag. NC-SI Commands, Responses and AENs shall have a payload data length between 46 and 1500 octets (bytes). This is in compliance with the 802.3 specification. The length of Ethernet frame that Figure 15 shows is between 64 octets (for a payload of 46 octets) and 1518 octets (for a payload with 1500 octets).

Pass-through packets also follow the 802.3 specification. The maximum payload size is 1500 octets; the minimum payload size shall be 42 octets when 802.1Q (VLAN) tag is present and 46 octets when the 802.1Q tag is not present. The Layer-2 Ethernet frame for a 802.1Q tagged frame shall be between 64 octets (for a payload of 42 octets) and 1522 octets (for a payload with 1500 octets). For Pass-through packets that are not 802.1Q tagged,

STANDARDSISO.COM : Click to view the full PDF of ISO/IEC 24079:2024

© ISO/IEC 2024 – All rights reserved

the minimum Layer-2 Ethernet frame size is 64 octets (for a payload of 46 octets) and the maximum Layer-2 Ethernet frame size is 1518 octets (for a payload with 1500 octets).

5.4.2 Control packet data structure

Each NC-SI Control packet is made up of a 16-byte packet header and a payload section whose length is specific to the packet type.

5.4.2.1 Control packet header

The 16-byte control packet header is used in command, response, and AEN packets, and contains data values intended to allow the packet to be identified, validated, and processed. The packet header is in big-endian byte order, as Table 10 shows.

Table 10 – Control packet header format

	Bits			
Bytes	**31..24**	**23..16**	**15..08**	**07..00**
00..03	MC ID	Header Revision	Reserved	IID
04..07	Control Packet Type	Ch. ID	Reserved	Payload Length
08..11	Reserved			
12..15	Reserved			

5.4.2.1.1 Management Controller ID

In Control packets, this 1-byte field identifies the Management Controller issuing the packet. For this version of the specification, Management Controllers should set this field to `0x00` (zero). This implies that only one management controller is supported for accessing the NC via NC-SI at any given time, Network Controllers responding to command packets should copy the Management Controller ID field from the command packet header into the response packet header. For AEN packets, this field should be copied from the parameter that was set using the AEN Enable command.

5.4.2.1.2 Header revision

This 1-byte field identifies the version of the Control packet header in use by the sender. For this version of the specification, the header revision is `0x01`.

5.4.2.1.3 Instance ID (IID)

This 1-byte field contains the IID of the command and associated response. The Network Controller can use it to differentiate retried commands from new instances of commands. The Management Controller can use this value to match a received response to the previously sent command. For more information, see 5.2.3.2.2.

STANDARDSISO.COM : Click to view the full PDF of ISO/IEC 24079:2024

© ISO/IEC 2024 – All rights reserved

5.4.2.1.4 Control packet type

This 1-byte field contains the Identifier that is used to identify specific commands and responses, and to differentiate AENs from responses.

Each NC-SI command is assigned a unique 7-bit command type value in the range `0x00..0x7F`. The proper response type for each command type is formed by setting the most significant bit (bit 7) in the original 1-byte command value. This allows for a one-to-one correspondence between 128 unique response types and 128 unique command types.

5.4.2.1.5 Channel ID

This 1-byte field contains the Network Controller Channel Identifier. The Management Controller shall set this value to specify the package and internal channel ID for which the command is intended.

In a multi-drop configuration, all commands are received by all NC-SI Network Controllers present in the configuration. The Channel ID is used by each receiving Network Controller to determine if it is the intended recipient of the command. In Responses and AENs, this field carries the ID of the channel from which the response of AEN was issued.

5.4.2.1.6 Payload length

This 12-bit field contains the length, in bytes, of any payload data present in the command or response frame following the NC-SI packet header. This value does not include the length of the NC-SI header, the checksum value, or any padding that might be present.

5.4.2.1.7 Reserved

These fields are reserved for future use and should be written as zeros and ignored when read.

5.4.2.2 Control packet payload

The NC-SI packet payload may contain zero or more defined data values depending on whether the packet is a command or response packet, and on the specific type. The NC-SI packet payload is always formatted in big-endian byte order, as Table 11 shows.

Table 11 – Generic example of control packet payload

	Bits			
Bytes	**31..24**	**23..16**	**15..08**	**07..00**
00..03	$Data0_3$	$Data0_2$	$Data0_1$	$Data0_0$
04..07	$Data1_7$	$Data1_6$	$Data1_5$	$Data1_4$
08..11	$Data1_3$	$Data1_2$	$Data1_1$	$Data1_0$
..				
…	$DataN\text{-}1_4$	$DataN\text{-}1_3$	$DataN\text{-}1_2$	$DataN\text{-}1_1$
…	$DataN\text{-}1_0$	Payload Pad (as required)		
…	2s Complement Checksum Compensation			
…	Ethernet Packet Pad (as required)			

STANDARDSISO.COM : Click to view the full PDF of ISO/IEC 24079:2024

© ISO/IEC 2024 – All rights reserved

5.4.2.2.1 Data

As Table 11 shows, the bytes following the NC-SI packet header may contain payload data fields of varying sizes, and which may be aligned or require padding. In the case where the payload defines data, all data-field byte layouts (Data0–DataN-1) shall use big-endian byte ordering with the most significant byte of the field in the lowest addressed byte position (that is, coming first).

5.4.2.2.2 Payload pad

If the payload is present and does not end on a 32-bit boundary, one to three padding bytes equal to `0x00` shall be present to align the checksum field to a 32-bit boundary.

5.4.2.2.3 2's Complement checksum compensation

This 4-byte field contains the 32-bit checksum compensation value that may be included in each command and response packet by the sender of the packet. When it is implemented, the checksum compensation shall be computed as the 2's complement of the checksum, which shall be computed as the 32-bit unsigned sum of the NC-SI packet header and NC-SI packet payload interpreted as a series of 16-bit unsigned integer values. A packet receiver supporting packet checksum verification shall use the checksum compensation value to verify packet data integrity by computing the 32-bit checksum described above, adding to it the checksum compensation value from the packet, and verifying that the result is 0.

Verification of non-zero NC-SI packet checksum values is optional. An implementation may elect to generate the checksums and may elect to verify checksums that it receives. The checksum field is generated and handled according to the following rules:

- A checksum field value of all zeros specifies that a header checksum is not being provided for the NC-SI Control packet, and that the checksum field value shall be ignored when processing the packet.
- If the originator of an NC-SI Control packet is not generating a checksum, the originator shall use a value of all zeros for the header checksum field.
- If a non-zero checksum field is generated for an NC-SI Control packet, that header checksum field value shall be calculated using the specified algorithm.
- All receivers of NC-SI control packets shall accept packets with all zeros as the checksum value (provided that other fields and the CRC are correct).
- The receiver of an NC-SI Control packet may reject (silently discard) a packet that has an incorrect non-zero checksum.
- The receiver of an NC-SI Control packet may ignore any non-zero checksums that it receives and accept the packet, even if the checksum value is incorrect (that is, an implementation is not required to verify the checksum field).
- A controller that generates checksums is not required to verify checksums that it receives.
- A controller that verifies checksums is not required to generate checksums for NC-SI Control packets that it originates.

STANDARDSISO.COM : Click to view the full PDF of ISO/IEC 24079:2024

© ISO/IEC 2024 – All rights reserved

5.4.2.2.4 Ethernet packet pad

Per IEEE 802.3, all Ethernet frames shall be at least 64 bytes in length, from the DA through and including FCS. For NC-SI packets, this requirement applies to the Ethernet header and payload, which includes the NC-SI Control packet header and payload. Most NC-SI Control packets are less than the minimum Ethernet frame payload size of 46 bytes in length and require padding to comply with IEEE 802.3.

5.4.2.3 Command packet payload

Command packets have no common fixed payload format.

5.4.2.4 Response packet payload

Unlike command packets that do not necessarily contain payload data, all response packets carry at least a 4-byte payload. This default payload carries the response codes and reason codes (described in 5.4.2.5) that provide status on the outcome of processing the originating command packet, and is present in all response packet payload definitions.

The default payload occupies bytes `00..03` of the response packet payload, with any additional response-packet-specific payload defined to follow starting on the next word. All response packet payload fields are defined with big-endian byte ordering, as Table 12 shows.

Table 12 – Generic example of response packet payload format

	Bits			
Bytes	**31..24**	**23..16**	**15..08**	**07..00**
00..03	Response Code		Reason Code	
..	...	...	...	...
...	DataN-1_4	DataN-1_3	DataN-1_2	DataN-1_1
...	DataN-1_0	Word Pad (as required)		
...	2s Complement Checksum Compensation			
...	Ethernet Packet Pad (as required)			

5.4.2.5 Response codes and reason codes

5.4.2.5.1 General

Response codes and reason codes are status values that are returned in the responses to NC-SI commands. The response code values provide a general categorization of the status being returned. The reason code values provide additional detail related to a particular response code.

Response codes and reason codes are divided into numeric ranges that distinguish whether the values represent standard codes that this specification defines or are vendor/OEM-specific values that the vendor of the controller define.

The response code is a 2-byte field where values from `0x00` through `0x7F` are reserved for definition by this specification. Values from `0x80` through `0xFF` are vendor/OEM-specific codes that the vendor of the controller defines.

STANDARDSISO.COM : Click to view the full PDF of ISO/IEC 24079:2024

© ISO/IEC 2024 – All rights reserved

The reason code is a 2-byte field. Table 13 defines the ranges of values.

Table 13 – Reason code ranges

MS-byte	LS-byte	Description
0x00	0x00–0x7F	Standard generic reason codes This range of values for the lower byte is used for reason codes that are not specific to a particular command but can be used as reason codes in responses for any command. The values in this range are reserved for definition by this specification.
	0x80–0xFF	Vendor/OEM generic reason codes This range of values for the lower byte is used for reason codes that are not specific to a particular command but can be used as reason codes in responses for any command. The vendor of the controller defines the values in this range.
Command Number NOTE This means that Command Number 00 cannot have any command-specific reason codes.	0x00–0x7F	Standard command-specific reason codes This range of values for the lower byte is used for reason codes that are specific to a particular command. The upper byte holds the value of the command for which the reason code is defined. The values in this range are reserved for definition by this specification.
	0x80–0xFF	Vendor/OEM command-specific reason codes This range of values for the lower byte is used for reason codes that are specific to a particular command. The upper byte holds the value of the command for which the reason code is defined. The vendor of the controller defines the values in this range.

5.4.2.5.2 Response code and reason code values

Table 14 defines the standard response code values and Table 15 defines the standard reason code values. Command-specific values, if any, are defined in the clauses that describe the response data for the command. Unless otherwise specified, the standard reason codes may be used in combination with any response code. There are scenarios where multiple combinations of response and reason code values are valid. Unless otherwise specified, an implementation may return any valid combination of response and reason code values for the condition.

Table 14 – Standard response code values

Value	Description	Comment
0x0000	Command Completed	Returned for a successful command completion. When this response code is returned, the reason code shall be 0x0000 as Table 15 describes.
0x0001	Command Failed	Returned to report that a valid command could not be processed or failed to complete correctly
0x0002	Command Unavailable	Returned to report that a command is temporarily unavailable for execution because the controller is in a transient state or busy condition
0x0003	Command Unsupported	Returned to report that a command is not supported by the implementation. The reason code “Unknown / Unsupported Command Type should be returned along with this response code for all unsupported commands.
0x8000–0xFFFF	Vendor/OEM-specific	Response codes defined by the vendor of the controller

STANDARDSISO.COM : Click to view the full PDF of ISO/IEC 24079:2024

© ISO/IEC 2024 – All rights reserved

Table 15 – Standard reason code values

Value	Description	Comment
0x0000	No Error/No Reason Code	When used with the Command Completed response code, indicates that the command completed normally. Otherwise, this value indicates that no additional reason code information is being provided.
0x0001	Interface Initialization Required	Returned for all commands except Select/Deselect Package commands when the channel is in the Initial State, until the channel receives a Clear Initial State command
0x0002	Parameter Is Invalid, Unsupported, or Out-of-Range	Returned when a received parameter value is outside of the acceptable values for that parameter
0x0003	Channel Not Ready	May be returned when the channel is in a transient state in which it is unable to process commands normally
0x0004	Package Not Ready	May be returned when the package and channels within the package are in a transient state in which normal command processing cannot be done
0x0005	Invalid payload length	The payload length in the command is incorrect for the given command
0x7FFF	Unknown / Unsupported Command Type	Returned when the command type is unknown or unsupported. This reason code shall only be used when the response code is 0x0003 (Command Unsupported) as Table 14 describes.
0x8000– 0xFFFF	OEM Reason Code	Vendor-specific reason code defined by the vendor of the controller

5.4.2.6 AEN packet format

AEN packets shall follow the general packet format of Control packets, with the IID field set to 0 because, by definition, the Management Controller does not send a response packet to acknowledge an AEN packet. The Control Packet Type field shall have the value 0xFF. The originating Network Controller shall fill in the Channel ID (Ch. ID) field with its own ID to identify itself as the source of notification. Currently, three AEN types are defined in the AEN Type field.

Table 16 represents the general AEN packet format.

Table 16 – AEN packet format

	Bits			
Bytes	**31..24**	**23..16**	**15..08**	**07..00**
00..03	MC ID = 0x0	0x01	Reserved	IID = 0x0
04..07	Control Packet Type = 0xFF	Originating Ch. ID	Reserved	Payload Length
08..11	Reserved			
12..15	Reserved			
16..19	Reserved			AEN Type
20..23	OPTIONAL AEN Data			
24..27	Checksum			

5.4.2.7 AEN packet data structure

Table 17 shows the values of the AEN type field (8-bit).

STANDARDSISO.COM : Click to view the full PDF of ISO/IEC 24079:2024

© ISO/IEC 2024 – All rights reserved

Table 17 – AEN types

Value	AEN Type
0x0	Link Status Change
0x1	Configuration Required
0x2	Host NC Driver Status Change
0x3..0x6F	Reserved
0x70..0x7F	Transport-specific AENs
0x80..0xFF	OEM-specific AENs

5.4.3 Control packet type definitions

Command packet types are in the range of 0x00 to 0x7F. Table 18 describes each command, its corresponding response, and the type value for each. Table 18 includes commands addressed to either a package or a channel. The commands addressed to a package are highlighted with gray background. PLDM and OEM-specific commands carried over NC-SI may be package specific or channel specific or both.

Mandatory (M), Optional (O), and Conditional (C) refer to command support requirements for the Network Controller.

Table 18 – Command and response types

Command type	Command name	Description	Response type	Command support requirement
0x00	Clear Initial State	Used by the Management Controller to acknowledge that the Network Controller is in the Initial State	0x80	M
0x01	Select Package	Used to explicitly select a controller package to transmit packets through the NC-SI interface	0x81	M
0x02	Deselect Package	Used to explicitly instruct the controller package to stop transmitting packets through the NC-SI interface	0x82	M
0x03	Enable Channel	Used to enable the NC-SI channel and to cause the forwarding of bidirectional Management Controller packets to start	0x83	M
0x04	Disable Channel	Used to disable the NC-SI channel and to cause the forwarding of bidirectional Management Controller packets to cease	0x84	M
0x05	Reset Channel	Used to synchronously put the Network Controller back to the Initial State	0x85	M
0x06	Enable Channel Network TX	Used to explicitly enable the channel to transmit Pass-through packets onto the network	0x86	M
0x07	Disable Channel Network TX	Used to explicitly disable the channel from transmitting Pass-through packets onto the network	0x87	M
0x08	AEN Enable	Used to control generating AENs	0x88	C
0x09	Set Link	Used during OS absence to force link settings, or to return to auto-negotiation mode	0x89	M
0x0A	Get Link Status	Used to get current link status information	0x8A	M
0x0B	Set VLAN Filter	Used to program VLAN IDs for VLAN filtering	0x8B	M
0x0C	Enable VLAN	Used to enable VLAN filtering of Management Controller RX packets	0x8C	M
0x0D	Disable VLAN	Used to disable VLAN filtering	0x8D	M

STANDARDSISO.COM : Click to view the full PDF of ISO/IEC 24079:2024

© ISO/IEC 2024 – All rights reserved

Command type	Command name	Description	Response type	Command support requirement
0x0E	Set MAC Address	Used to configure and enable unicast and multicast MAC address filters	0x8E	M
0x10	Enable Broadcast Filter	Used to enable selective broadcast packet filtering	0x90	M
0x11	Disable Broadcast Filter	Used to disable all broadcast packet filtering, and to enable the forwarding of all broadcast packets	0x91	M
0x12	Enable Global Multicast Filter	Used to enable selective multicast packet filtering	0x92	C
0x13	Disable Global Multicast Filter	Used to disable all multicast packet filtering, and to enable forwarding of all multicast packets	0x93	C
0x14	Set NC-SI Flow Control	Used to configure IEEE 802.3 flow control on the NC-SI	0x94	O
0x15	Get Version ID	Used to get controller-related version information	0x95	M
0x16	Get Capabilities	Used to get optional functions supported by the NC-SI	0x96	M
0x17	Get Parameters	Used to get configuration parameter values currently in effect on the controller	0x97	M
0x18	Get Controller Packet Statistics	Used to get current packet statistics for the Ethernet Controller	0x98	O
0x19	Get NC-SI Statistics	Used to request the packet statistics specific to the NC-SI	0x99	O
0x1A	Get NC-SI Pass-through Statistics	Used to request NC-SI Pass-through packet statistics	0x9A	O
0x1B	Get Package Status	Used to get current status of the package.	0x9B	O
0x50	OEM Command	Used to request vendor-specific data	0xD0	O
0x51	PLDM	Used for PLDM request over NC-SI over RBT	0xD1	O
0x52	Get Package UUID	Returns a universally unique identifier (UUID) for the package	0xD2	O
0x51–0x60	Reserved for Transport Protocol Specific Commands	Used to define transport protocol specific commands (e.g., PLDM over NC-SI/RBT)	0xD1–0xE0	O
Key: M = Mandatory (required) O = Optional C = Conditional (see command description)				

STANDARDSISO.COM : Click to view the full PDF of ISO/IEC 24079:2024

5.4.4 Command and response packet formats

This clause describes the format for each of the NC-SI commands and corresponding responses.

The corresponding response packet format shall be mandatory when a given command is supported.

5.4.4.1 NC-SI command frame format

Table 19 describes the NC-SI frame format that shall be accepted by the Network Controller.

© ISO/IEC 2024 – All rights reserved

Table 19 – Example of complete minimum-sized NC-SI command packet

	Bits			
Bytes	**31..24**	**23..16**	**15..08**	**07..00**
00..03	0xFF	0xFF	0xFF	0xFF
04..07	0xFF	0xFF	0xXX	0xXX
08..11	0xXX	0xXX	0xXX	0xXX
12..15	0x88F8		MC ID	Header Revision
16..19	Reserved	IID	Command Type	Ch. ID
20..23	Reserved	Payload Length	Reserved	
24..27	Reserved		Reserved	
28..31	Reserved		Checksum (3..2)	
32..35	Checksum (1..0)		Pad	
36..39	Pad			
40..43	Pad			
44..47	Pad			
48..51	Pad			
52..55	Pad			
56..59	Pad			
60..63	FCS			

5.4.4.2 NC-SI response packet format

Table 20 describes the NC-SI response packet format that shall be transmitted by the Network Controller.

Table 20 – Example of complete minimum-sized NC-SI response packet

	Bits			
Bytes	**31..24**	**23..16**	**15..08**	**07..00**
00..03	0xFF	0xFF	0xFF	0xFF
04..07	0xFF	0xFF	0xFF	0xFF
08..11	0xFF	0xFF	0xFF	0xFF
12..15	0x88F8		MC ID	Header Revision
16..19	Reserved	IID	Response Type	Ch. ID
20..23	Reserved	Payload Length	Reserved	
24..27	Reserved		Reserved	
28..31	Reserved		Response Code	
32..35	Reason Code		Checksum (3..2)	
36..39	Checksum (1..0)		Pad	
40..43	Pad			
44..47	Pad			
48..51	Pad			
52..55	Pad			
56..59	Pad			
60..63	FCS			

STANDARDSISO.COM : Click to view the full PDF of ISO/IEC 24079:2024

© ISO/IEC 2024 – All rights reserved

5.4.4.3 Clear Initial State command (0x00)

The Clear Initial State command provides the mechanism for the Management Controller to acknowledge that it considers a channel to be in the Initial State (typically because the Management Controller received an “Interface Initialization Required” reason code) and to direct the Network Controller to start accepting commands for initializing or recovering the NC-SI operation. When in the Initial State, the Network Controller shall return the “Interface Initialization Required” reason code for all commands until it receives the Clear Initial State command.

If the channel is in the Initial State when it receives the Clear Initial State command, the command shall cause the Network Controller to stop returning the “Interface Initialization Required” reason code. The channel shall also treat any subsequently received instance ID numbers as IDs for new command instances, not retries.

If the channel is not in the Initial State when it receives this command, it shall treat any subsequently received instance ID numbers as IDs for new command instances, not retries.

Table 21 describes the packet format of the Clear Initial State command.

Table 21 – Clear Initial State command packet format

	Bits			
Bytes	**31..24**	**23..16**	**15..08**	**07..00**
00..15	NC-SI Header			
16..19	Checksum			
20..45	Pad			

5.4.4.4 Clear Initial State response (0x80)

Currently no command-specific reason code is identified for this response (see Table 22).

Table 22 – Clear Initial State response packet format

	Bits			
Bytes	**31..24**	**23..16**	**15..08**	**07..00**
00..15	NC-SI Header			
16..19	Response Code		Reason Code	
20..23	Checksum			
24..45	Pad			

5.4.4.5 Select Package command (0x01)

A package is considered to be “selected” when its NC-SI output buffers are allowed to transmit packets through the NC-SI interface. Conversely, a package is “deselected” when it is not allowed to transmit packets through the NC-SI interface.

The Select Package command provides a way for a Management Controller to explicitly take a package out of the deselected state and to control whether hardware arbitration is enabled for the package. (Similarly, the Deselect Package command allows a Management Controller to explicitly deselect a package.)

STANDARDSISO.COM : Click to view the full PDF of ISO/IEC 24079:2024

© ISO/IEC 2024 – All rights reserved

The NC-SI package in the Network Controller shall also become selected if the package receives any other NC-SI command that is directed to the package or to a channel within the package.

The Select Package command is addressed to the package, rather than to a particular channel (that is, the command is sent with a Channel ID where the Package ID subfield matches the ID of the intended package and the Internal Channel ID subfield is set to `0x1F`).

More than one package can be in the selected state simultaneously if hardware arbitration is used between the selected packages and is active. The hardware arbitration logic ensures that buffer conflicts will not occur between selected packages.

If hardware arbitration is not active or is not used for a given package, only one package shall be selected at a time. To switch between packages, the Deselect Package command is used by the Management Controller to put the presently selected package into the deselected state before another package is selected.

A package shall stay in the selected state until it receives a Deselect Package command, unless an internal condition causes all internal channels to enter the Initial State.

A package that is not using hardware arbitration may leave its output buffers enabled for the time that it is selected, or it may place its output buffers into the high-impedance state between transmitting packets through the NC-SI interface. (Temporarily placing the output buffers into the high-impedance state is not the same as entering the deselected state.)

For Type A integrated controllers: Because the bus buffers are separately controlled, a separate Select Package command needs to be sent to each Package ID in the controller that is to be enabled to transmit through the NC-SI interface. If the internal packages do not support hardware arbitration, only one package shall be selected at a time; otherwise, a bus conflict will occur.

For Type S single channel, and Types B and C integrated controllers: A single set of bus buffers exists for the package. Sending a Select Package command selects the entire package and enables all channels within the package to transmit through the NC-SI interface. (Whether a particular channel in a selected package starts transmitting Pass-through and AEN packets depends on whether that channel was enabled or disabled using the Enable or Disable Channel commands and whether the package may have had packets queued up for transmission.)

Table 23 describes the packet format of the Select Package command. Table 24 describes the disable byte for hardware arbitration.

STANDARDSISO.COM : Click to view the full PDF of ISO/IEC 24079:2024

Table 23 – Select Package command packet format

	Bits			
Bytes	**31..24**	**23..16**	**15..08**	**07..00**
00..15	NC-SI Header			
16..19	Reserved			Hardware Arbitration Disable
20..23	Checksum			
24..45	Pad			

© ISO/IEC 2024 – All rights reserved

Table 24 – Hardware arbitration disable byte

Bits	Description
0	`0b` = Hardware arbitration between packages is enabled. `1b` = Disable hardware arbitration. Disabling hardware arbitration causes the package's arbitration logic to enter or remain in bypass mode. In the case that the Network Controller does not support hardware arbitration, this bit is ignored; the Network Controller shall not return an error if the Select Package command can otherwise be successfully processed.
7..1	Reserved

5.4.4.6 Select Package response (0x81)

Currently no command-specific reason code is identified for this response (see

Table 25).

Table 25 – Select Package response packet format

	Bits			
Bytes	**31..24**	**23..16**	**15..08**	**07..00**
00..15	NC-SI Header			
16..19	Response Code		Reason Code	
20..23	Checksum			
24..45	Pad			

5.4.4.7 Deselect Package command (0x02)

The Deselect Package command directs the controller package to stop transmitting packets through the NC-SI interface and to place the output buffers for the package into the high-impedance state.

The Deselect Package command is addressed to the package, rather than to a particular channel (that is, the command is sent with a Channel ID where the Package ID subfield matches the ID of the intended package and the Internal Channel ID subfield is set to `0x1F`).

The controller package enters the deselected state after it has transmitted the response to the Deselect Package command and placed its buffers into the high-impedance state. The controller shall place its outputs into the high-impedance state within the Package Deselect to Hi-Z Interval (T1). (This interval gives the controller being deselected time to turn off its electrical output buffers after sending the response to the Deselect Package command.)

If hardware arbitration is not supported or used, the Management Controller should wait for the Package Deselect to Hi-Z Interval (T1) to expire before selecting another controller.

For Type A integrated controllers: Because the bus buffers are separately controlled, putting the overall controller package into the high-impedance state requires sending separate Deselect Package commands to each Package ID in the overall package.

For Type S single channel, and Types B and C integrated controllers: A single set of bus buffers exists for the package. Sending a Deselect Package command deselects the entire NC-SI package and prevents all channels within the package from transmitting through the NC-SI interface.

STANDARDSISO.COM : Click to view the full PDF of ISO/IEC 24079:2024

© ISO/IEC 2024 – All rights reserved

Table 26 describes the packet format of the Deselect Package command.

Table 26 – Deselect Package command packet format

	Bits			
Bytes	**31..24**	**23..16**	**15..08**	**07..00**
00..15	NC-SI Header			
16..19	Checksum			
20..45	Pad			

5.4.4.8 Deselect Package response (0x82)

The Network Controller shall always put the package into the deselected state after sending a Deselect Package Response.

No command-specific reason code is identified for this response (see Table 27).

Table 27 – Deselect Package response packet format

	Bits			
Bytes	**31..24**	**23..16**	**15..08**	**07..00**
00..15	NC-SI Header			
16..19	Response Code		Reason Code	
20..23	Checksum			
24..45	Pad			

5.4.4.9 Enable Channel command (0x03)

The Enable Channel command shall enable the Network Controller to allow transmission of Pass-through and AEN packets to the Management Controller through the NC-SI.

Table 28 describes the packet format of the Enable Channel command.

Table 28 – Enable Channel command packet format

	Bits			
Bytes	**31..24**	**23..16**	**15..08**	**07..00**
00..15	NC-SI Header			
16..19	Checksum			
20..45	Pad			

5.4.4.10 Enable Channel response (0x83)

No command-specific reason code is identified for this response (see Table 29).

STANDARDSISO.COM : Click to view the full PDF of ISO/IEC 24079:2024

© ISO/IEC 2024 – All rights reserved

Table 29 – Enable Channel response packet format

	Bits			
Bytes	**31..24**	**23..16**	**15..08**	**07..00**
00..15	NC-SI Header			
16..19	Response Code		Reason Code	
20..23	Checksum			
24..45	Pad			

5.4.4.11 Disable Channel command (0x04)

The Disable Channel command allows the Management Controller to disable the flow of packets, including Pass-through and AEN, to the Management Controller.

A Network Controller implementation is not required to flush pending packets from its RX Queues when a channel becomes disabled. If queuing is subsequently disabled for a channel, it is possible that a number of packets from the disabled channel could still be pending in the RX Queues. These packets may continue to be transmitted through the NC-SI interface until the RX Queues are emptied of those packets. The Management Controller should be aware that it might receive a number of packets from the channel before receiving the response to the Disable Channel command.

The 1-bit Allow Link Down (ALD) field can be used by the Management Controller to indicate that the link corresponding to the specified channel is not required after the channel is disabled. The Network Controller is allowed to take down the external network physical link if no other functionality (for example, host OS or WoL [Wake-on-LAN]) is active.

Possible values for the 1-bit ALD field are as follows:

- `0b` = Keep link up (establish and/or keep a link established) while channel is disabled
- `1b` = Allow link to be taken down while channel is disabled

Table 30 describes the packet format of the Disable Channel command.

Table 30 – Disable Channel command packet format

	Bits			
Bytes	**31..24**	**23..16**	**15..08**	**07..00**
00..15	NC-SI Header			
16..19	Reserved			ALD
20..23	Checksum			
24..45	Pad			

NOTE It is currently unspecified whether this command will cause the Network Controller to cease the pass through of traffic from the Management Controller to the network, or if this can only be done using the Disable Channel Network TX command.

STANDARDSISO.COM : Click to view the full PDF of ISO/IEC 24079:2024

© ISO/IEC 2024 – All rights reserved

5.4.4.12 Disable Channel response (0x84)

No command-specific reason code is identified for this response (see Table 31).

Table 31 – Disable Channel response packet format

	Bits			
Bytes	**31..24**	**23..16**	**15..08**	**07..00**
00..15	NC-SI Header			
16..19	Response Code		Reason Code	
20..23	Checksum			
24..45	Pad			

5.4.4.13 Reset Channel command (0x05)

The Reset Channel command allows the Management Controller to put the channel into the Initial State. Packet transmission is not required to stop until the Reset Channel response has been sent.

Thus, the Management Controller should be aware that it may receive a number of packets from the channel before receiving the response to the Reset Channel command.

Table 32 describes the packet format of the Reset Channel command.

Table 32 – Reset Channel command packet format

	Bits			
Bytes	**31..24**	**23..16**	**15..08**	**07..00**
00..15	NC-SI Header			
16..19	Reserved			
20..23	Checksum			
24..45	Pad			

5.4.4.14 Reset Channel response (0x85)

Currently no command-specific reason code is identified for this response (see Table 22).

Table 33 – Reset Channel response packet format

	Bits			
Bytes	**31..24**	**23..16**	**15..08**	**07..00**
00..15	NC-SI Header			
16..19	Response Code		Reason Code	
20..23	Checksum			
24..45	Pad			

STANDARDSISO.COM : Click to view the full PDF of ISO/IEC 24079:2024

© ISO/IEC 2024 – All rights reserved

5.4.4.15 Enable Channel Network TX command (0x06)

The Enable Channel Network TX command shall enable the channel to transmit Pass-through packets onto the network. After network transmission is enabled, this setting shall remain enabled until a Disable Channel Network TX command is received or the channel enters the Initial State.

The intention of this command is to control which Network Controller ports are allowed to transmit to the external network. The Network Controller compares the source MAC address in outgoing Pass-through packets to the unicast MAC address(es) configured using the Set MAC Address command. If a match exists, the packet is transmitted to the network

Table 34 describes the packet format of the Enable Channel Network TX command.

Table 34 – Enable Channel Network TX command packet format

	Bits			
Bytes	**31..24**	**23..16**	**15..08**	**07..00**
00..15	NC-SI Header			
16..19	Checksum			
20..45	Pad			

5.4.4.16 Enable Channel Network TX response (0x86)

No command-specific reason code is identified for this response (see Table 35).

Table 35 – Enable Channel Network TX response packet format

	Bits			
Bytes	**31..24**	**23..16**	**15..08**	**07..00**
00..15	NC-SI Header			
16..19	Response Code		Reason Code	
20..23	Checksum			
24..45	Pad			

5.4.4.17 Disable Channel Network TX command (0x07)

The Disable Channel Network TX command disables the channel from transmitting Pass-through packets onto the network. After network transmission is disabled, it shall remain disabled until an Enable Channel Network TX command is received.

Table 36 describes the packet format of the Disable Channel Network TX command.

Table 36 – Disable Channel Network TX command packet format

	Bits			
Bytes	**31..24**	**23..16**	**15..08**	**07..00**
00..15	NC-SI Header			
16..19	Checksum			

STANDARDSISO.COM : Click to view the full PDF of ISO/IEC 24079:2024

© ISO/IEC 2024 – All rights reserved

	Bits			
Bytes	**31..24**	**23..16**	**15..08**	**07..00**
20..23	Pad			

5.4.4.18 Disable Channel Network TX response (0x87)

The NC-SI shall, in the absence of a checksum error or identifier mismatch, always accept the Disable Channel Network TX command and send a response.

Currently no command-specific reason code is identified for this response (see

Table 37).

Table 37 – Disable Channel Network TX response packet format

	Bits			
Bytes	**31..24**	**23..16**	**15..08**	**07..00**
00..15	NC-SI Header			
16..19	Response Code		Reason Code	
20..23	Checksum			
24..45	Pad			

5.4.4.19 AEN Enable command (0x08)

Network Controller implementations shall support this command on the condition that the Network Controller generates one or more standard AENs. The AEN Enable command enables and disables the different standard AENs supported by the Network Controller. The Network Controller shall copy the AEN MC ID field from the AEN Enable command into the MC ID field in every subsequent AEN sent to the Management Controller.

For more information, see 5.4.5 ("AEN packet formats") and 5.4.2.1.1 ("Management Controller ID").

Control of transport-specific AENs is outside the scope of this specification, and should be defined by the particular transport binding specifications.

Table 38 describes the packet format of the AEN Enable command.

Table 38 – AEN Enable command packet format

	Bits			
Bytes	**31..24**	**23..16**	**15..08**	**07..00**
00..15	NC-SI Header			
16..19	Reserved			AEN MC ID
20..23	AEN Control			
24..27	Checksum			
28..45	Pad			

STANDARDSISO.COM : Click to view the full PDF of ISO/IEC 24079:2024

© ISO/IEC 2024 – All rights reserved

Table 39 shows the format for the AEN Control field.

Table 39 – Format of AEN control

Bit position	Field description	Value description
0	Link Status Change AEN control	0b = Disable Link Status Change AEN 1b = Enable Link Status Change AEN
1	Configuration Required AEN control	0b = Disable Configuration Required AEN 1b = Enable Configuration Required AEN
2	Host NC Driver Status Change AEN control	0b = Disable Host NC Driver Status Change AEN 1b = Enable Host NC Driver Status Change AEN
15..3	Reserved	Reserved
31..16	OEM-specific AEN control	OEM-specific control

5.4.4.20 AEN Enable response (0x88)

Currently no command-specific reason code is identified for this response (see Table 40).

Table 40 – AEN Enable response packet format

	Bits			
Bytes	**31..24**	**23..16**	**15..08**	**07..00**
00..15	NC-SI Header			
16..19	Response Code		Reason Code	
20..23	Checksum			
24..45	Pad			

5.4.4.21 Set Link command (0x09)

The Set Link command may be used by the Management Controller to configure the external network interface associated with the channel by using the provided settings. Upon receiving this command, while the host NC driver is not operational, the channel shall attempt to set the link to the configuration specified by the parameters. Upon successful completion of this command, link settings specified in the command should be used by the network controller as long as the host NC driver does not overwrite the link settings.

In the absence of an operational host NC driver, the NC should attempt to make the requested link state change even if it requires the NC to drop the current link. The channel shall send a response packet to the Management Controller within the required response time. However, this specification does not specify the amount of time the requested link state changes take to complete. The actual link settings are controlled by the host NC driver when it is operational. When the host NC driver is operational, link settings specified by the MC using the Set Link command may be overwritten by the host NC driver. The link settings are not restored by the NC if the host NC driver becomes non-operational.

STANDARDSISO.COM : Click to view the full PDF of ISO/IEC 24079:2024

© ISO/IEC 2024 – All rights reserved

Table 41 describes the packet format of the Set Link command.

Table 41 – Set Link command packet format

	Bits			
Bytes	**31..24**	**23..16**	**15..08**	**07..00**
00..15	NC-SI Header			
16..19	Link Settings			
20..23	OEM Link Settings			
24..27	Checksum			
28..45	Pad			

Table 42 and Table 43 describe the Set Link bit definitions. See IEEE 802.3 for definitions of Auto Negotiation, Duplex Setting, Pause Capability, and Asymmetric Pause Capability.

Table 42 – Set Link bit definitions

Bit position	Field description	Value description
00	Auto Negotiation	1b = enable 0b = disable
01..07	Link Speed Selection More than one speed can be selected when Auto Negotiation is set to 'enable'. If Auto Negotiation is not used, the channel attempts to force the link to the specified setting (in this case, if the setting is not supported or if multiple speeds are enabled, a Command Failed response code and Parameter Is Invalid, Unsupported, or Out-of-Range reason code shall be returned). NOTE Additional link speeds are defined below.	Bit 01: 1b = enable 10 Mbps
		Bit 02: 1b = enable 100 Mbps
		Bit 03: 1b = enable 1000 Mbps (1 Gbps)
		Bit 04: 1b = enable 10 Gbps
		Bit 05: 1b = enable 20 Gbps (optional for NC-SI 1.1, RESERVED for NC-SI 1.0)
		Bit 06: 1b = enable 25 Gbps (optional for NC-SI 1.1, RESERVED for NC-SI 1.0)
		Bit 07: 1b = enable 40 Gbps (optional for NC-SI 1.1, RESERVED for NC-SI 1.0)
08..09	Duplex Setting (separate duplex setting bits) More than one duplex setting can be selected when Auto Negotiation is set to 'enable'. If Auto Negotiation is not used, the channel attempts to force the link to the specified setting (in this case, if the setting is not supported or if multiple settings are enabled, a Command Failed response code and Parameter Is Invalid, Unsupported, or Out-of-Range reason code shall be returned).	Bit 08: 1b = enable half-duplex
		Bit 09: 1b = enable full-duplex
10	Pause Capability If Auto Negotiation is not used, the channel should apply pause settings assuming the partner supports the same capability.	1b = disable 0b = enable
11	Asymmetric Pause Capability If Auto Negotiation is not used, the channel should apply asymmetric pause settings	1b = enable 0b = disable

STANDARDSISO.COM : Click to view the full PDF of ISO/IEC 24079:2024

© ISO/IEC 2024 – All rights reserved

Bit position	Field description	Value description
	assuming the partner supports the same capability.	
12	OEM Link Settings Field Valid (see Table 43)	`1b` = enable `0b` = disable
13..16	Additional Link Speeds (see Link Speed Selection)	Bit 13: `1b` = enable 50 Gbps (optional for NC-SI 1.1, RESERVED for NC-SI 1.0) Bit 14: `1b` = enable 100 Gbps (optional for NC-SI 1.1, RESERVED for NC-SI 1.0) Bit 15: `1b` = enable 2.5 Gbps (optional for NC-SI 1.1, RESERVED for NC-SI 1.0) Bit 16: `1b` = enable 5 Gbps (optional for NC-SI 1.1, RESERVED for NC-SI 1.0)
17..31	Reserved	`0`

Table 43 – OEM Set Link bit definitions

Bit position	Field description	Value description
00..31	OEM Link Settings	Vendor specified

5.4.4.22 Set Link Response (0x89)

The channel shall, in the absence of a checksum error or identifier mismatch, always accept the Set Link command and send a response (see Table 44). In the presence of an operational Host NC driver, the NC should not attempt to make link state changes and should send a response with reason code `0x1` (Set Link Host OS/ Driver Conflict).

If the Auto Negotiation field is set, the NC should ignore Link Speed Selection and Duplex Setting fields that are not supported by the NC.

Table 44 – Set Link response packet format

	Bits			
Bytes	**31..24**	**23..16**	**15..08**	**07..00**
00..15	NC-SI Header			
16..19	Response Code		Reason Code	
20..23	Checksum			
24..45	Pad			

Table 45 describes the reason codes that are specific to the Set Link command. Returning the following command-specific codes is recommended, conditional upon Network Controller support for the related capabilities.

Table 45 – Set Link command-specific reason codes

Value	Description	Comment
`0x0901`	Set Link Host OS/ Driver Conflict	Returned when the Set Link command is received when the Host NC driver is operational
`0x0902`	Set Link Media Conflict	Returned when Set Link command parameters conflict with the media type (for example, Fiber Media)

STANDARDSISO.COM : Click to view the full PDF of ISO/IEC 24079:2024

© ISO/IEC 2024 – All rights reserved

Value	Description	Comment
0x0903	Set Link Parameter Conflict	Returned when Set Link parameters conflict with each other (for example, 1000 Mbps HD with copper media)
0x0904	Set Link Power Mode Conflict	Returned when Set Link parameters conflict with current low-power levels by exceeding capability
0x0905	Set Link Speed Conflict	Returned when Set Link parameters attempt to force more than one speed at the same time
0x0906	Link Command Failed-Hardware Access Error	Returned when PHY R/W access fails to complete normally while executing the Set Link or Get Link Status command

5.4.4.23 Get Link Status command (0x0A)

The Get Link Status command allows the Management Controller to query the channel for potential link status and error conditions (see Table 46).

Table 46 – Get Link Status command packet format

	Bits			
Bytes	**31..24**	**23..16**	**15..08**	**07..00**
00..15	NC-SI Header			
16..19	Checksum			
20..45	Pad			

5.4.4.24 Get Link Status response (0x8A)

The channel shall, in the absence of a checksum error or identifier mismatch, always accept the Get Link Status command and send a response (see Table 47).

Table 47 – Get Link Status response packet format

	Bits			
Bytes	**31..24**	**23..16**	**15..08**	**07..00**
00..15	NC-SI Header			
16..19	Response Code		Reason Code	
20..23	Link Status			
24..27	Other Indications			
28..31	OEM Link Status			
32..35	Checksum			
36..45	Pad			

STANDARDSISO.COM : Click to view the full PDF of ISO/IEC 24079:2024

© ISO/IEC 2024 – All rights reserved

Table 48 describes the Link Status bit definitions.

Table 48 – Link Status field bit definitions

Bit position	Field description	Value description
00	Link Flag	0b = Link is down 1b = Link is up (including Low Power Idle state in EEE) This field is mandatory.
04..01	Speed and duplex	0x0 = Auto-negotiate not complete [per IEEE 802.3], or SerDes Flag = 1b, or no Highest Common Denominator (HCD) from the following options (0x1 through 0xF) was found. 0x1 = 10BASE-T half-duplex 0x2 = 10BASE-T full-duplex 0x3 = 100BASE-TX half-duplex 0x4 = 100BASE-T4 0x5 = 100BASE-TX full-duplex 0x6 = 1000BASE-T half-duplex 0x7 = 1000BASE-T full-duplex 0x8 = 10G-BASE-T support or 10 Gbps 0x9 = 20 Gbps (optional for NC-SI 1.1, RESERVED for NC-SI 1.0) 0xA = 25 Gbps (optional for NC-SI 1.1, RESERVED for NC-SI 1.0) 0xB = 40 Gbps (optional for NC-SI 1.1, RESERVED for NC-SI 1.0) 0xC = 50 Gbps (optional for NC-SI 1.1, RESERVED for NC-SI 1.0) 0xD = 100 Gbps (optional for NC-SI 1.1, RESERVED for NC-SI 1.0) 0xE = 2.5 Gbps (optional for NC-SI 1.1, RESERVED for NC-SI 1.0) 0xF = Use values defined in Enhanced Speed and Duplex field starting at bit 24 (optional for NC-SI 1.1, RESERVED for NC-SI 1.0) When SerDes Flag = 0b, the value may reflect forced link setting. NOTE For the physical medium and/or speed/duplex not listed above, the closest speed and duplex option can be reported by the NC. This field does not infer any media type information.
05	Auto Negotiate Flag	1b = Auto-negotiation is enabled. This field always returns 0b if auto-negotiation is not supported, or not enabled. This field is mandatory if supported by the controller.
06	Auto Negotiate Complete	1b = Auto-negotiation has completed. This includes if auto-negotiation was completed using Parallel Detection. Always returns 0b if auto-negotiation is not supported or is not enabled. This field is mandatory if the Auto Negotiate Flag is supported.
07	Parallel Detection Flag	1b = Link partner did not support auto-negotiation and parallel detection was used to get link. This field contains 0b if Parallel Detection was not used to obtain link.
08	Reserved	None
09	Link Partner Advertised Speed and Duplex 1000TFD	1b = Link Partner is 1000BASE-T full-duplex capable. Valid when: SerDes Flag = 0b Auto-Negotiate Flag = 1b Auto-Negotiate Complete = 1b This field is mandatory.

STANDARDSISO.COM : Click to view the full PDF of ISO/IEC 24079:2024

© ISO/IEC 2024 – All rights reserved

Bit position	Field description	Value description
10	Link Partner Advertised Speed and Duplex 1000THD	1b = Link Partner is 1000BASE-T half-duplex capable. Valid when: SerDes Flag = 0b Auto-Negotiate Flag = 1b Auto-Negotiate Complete = 1b This field is mandatory.
11	Link Partner Advertised Speed 100T4	1b = Link Partner is 100BASE-T4 capable. Valid when: SerDes Flag = 0b Auto-Negotiate Flag = 1b Auto-Negotiate Complete = 1b This field is mandatory.
12	Link Partner Advertised Speed and Duplex 100TXFD	1b = Link Partner is 100BASE-TX full-duplex capable. Valid when: SerDes Flag = 0b Auto-Negotiate Flag = 1b Auto-Negotiate Complete = 1b This field is mandatory.
13	Link Partner Advertised Speed and Duplex 100TXHD	1b = Link Partner is 100BASE-TX half-duplex capable. Valid when: SerDes Flag = 0b Auto-Negotiate Flag = 1b Auto-Negotiate Complete = 1b This field is mandatory.
14	Link Partner Advertised Speed and Duplex 10TFD	1b = Link Partner is 10BASE-T full-duplex capable. Valid when: SerDes Flag = 0b Auto-Negotiate Flag = 1b Auto-Negotiate Complete = 1b This field is mandatory.
15	Link Partner Advertised Speed and Duplex 10THD	1b = Link Partner is 10BASE-T half-duplex capable. Valid when: SerDes Flag = 0b Auto-Negotiate Flag = 1b Auto-Negotiate Complete = 1b This field is mandatory.
16	TX Flow Control Flag	0b = Transmission of Pause frames by the NC onto the external network interface is disabled. 1b = Transmission of Pause frames by the NC onto the external network interface is enabled. This field is mandatory.
17	RX Flow Control Flag	0b = Reception of Pause frames by the NC from the external network interface is disabled. 1b = Reception of Pause frames by the NC from the external network interface is enabled. This field is mandatory.

STANDARDSISO.COM : Click to view the full PDF of ISO/IEC 24079:2024

© ISO/IEC 2024 – All rights reserved

Bit position	Field description	Value description
19..18	Link Partner Advertised Flow Control	`00b` = Link partner is not pause capable. `01b` = Link partner supports symmetric pause. `10b` = Link partner supports asymmetric pause toward link partner. `11b` = Link partner supports both symmetric and asymmetric pause. Valid when: SerDes Flag = `0b` Auto-Negotiate = `1b` Auto-Negotiate Complete = `1b` This field is mandatory.
20	SerDes Link	SerDes status (See 4.23) `0b` = SerDes not used or used to connect to an external PHY `1b` = SerDes used as a direct attach interface This field is mandatory.
21	OEM Link Speed Valid	`0b` = OEM link settings are invalid. `1b` = OEM link settings are valid.
23.22	Reserved	`0`
31..24	Extended Speed and duplex	Optional for NC-SI 1.1, RESERVED for NC-SI 1.0 `0x0` = Auto-negotiate not complete [per IEEE 802.3], or SerDes Flag = `1b`, or no highest common denominator speed from the following options (`0x01` through `0x0F`) was found. `0x01` = 10BASE-T half-duplex `0x02` = 10BASE-T full-duplex `0x03` = 100BASE-TX half-duplex `0x04` = 100BASE-T4 `0x05` = 100BASE-TX full-duplex `0x06` = 1000BASE-T half-duplex `0x07` = 1000BASE-T full-duplex `0x08` = 10G-BASE-T support or 10 Gbps `0x09` = 20 Gbps `0x0A` = 25 Gbps `0x0B` = 40 Gbps `0x0C` = 50 Gbps `0x0D` = 100 Gbps `0x0E` = 2.5 Gbps `0x0F` = 5 Gbps `0x10-0xFF` = Reserved When SerDes Flag = `0b`, the value may reflect forced link setting. NOTE For the physical medium and/or speed/duplex not listed above, the closest speed and duplex option can be reported by the NC. This field does not infer any media type information.

STANDARDSISO.COM : Click to view the full PDF of ISO/IEC 24079:2024

© ISO/IEC 2024 – All rights reserved

Table 49 describes the Other Indications field bit definitions.

Table 49 – Other Indications field bit definitions

Bits	Description	Values
00	Host NC Driver Status Indication	`0b` = The Network Controller driver for the host external network interface associated with this channel is not operational (not running), unknown, or not supported. `1b` = The Network Controller driver for the host external network interface associated with this channel is being reported as operational (running). This bit always returns `0b` if the Host NC Driver Status Indication is not supported.
01..31	Reserved	None

Table 50 describes the OEM Link Status field bit definitions.

Table 50 – OEM Link Status field bit definitions (optional)

Bits	Description	Values
00..31	OEM Link Status	OEM specific

Table 51 describes the reason code that is specific to the Get Link Status command.

Table 51 – Get Link Status command-specific reason code

Value	Description	Comment
`0x0A06`	Link Command Failed-Hardware Access Error	Returned when PHY R/W access fails to complete normally while executing the Set Link or Get Link Status command

5.4.4.25 Set VLAN Filter command (0x0B)

The Set VLAN Filter command is used by the Management Controller to program one or more VLAN IDs that are used for VLAN filtering.

Incoming packets that match both a VLAN ID filter and a MAC address filter are forwarded to the Management Controller. Other packets may be dropped based on the VLAN filtering mode per the Enable VLAN command.

The quantity of each filter type that is supported by the channel can be discovered by means of the Get Capabilities command. Up to 15 filters can be supported per channel. A Network Controller implementation shall support at least one VLAN filter per channel.

To configure a VLAN filter, the Management Controller issues a Set VLAN Filter command with the Filter Selector field indicating which filter is to be configured, the VLAN ID field set to the VLAN TAG values to be used by the filter, and the Enable field set to either enable or disable the selected filter.

The VLAN-related fields are specified per IEEE 802.1q. When VLAN Tagging is used, the packet includes a Tag Protocol Identifier (TPID) field and VLAN Tag fields, as Table 52 shows.

STANDARDSISO.COM : Click to view the full PDF of ISO/IEC 24079:2024

© ISO/IEC 2024 – All rights reserved

Table 52 – IEEE 802.1q VLAN fields

Field	Size	Description
TPI	2 bytes	Tag Protocol Identifier = 0x8100
VLAN TAG – user priority	3 bits	User Priority (typical value = 000b)
VLAN TAG – CFI	1 bit	Canonical Format Indicator = 0b
VLAN TAG – VLAN ID	12 bits	Zeros = no VLAN

When checking VLAN field values, the Network Controller shall match against the enabled VLAN Tag Filter values that were configured with the Set VLAN Filter command. The Network Controller shall also match on the TPI value of 0x8100, as specified by IEEE 802.1q. Matching against the User Priority/CFI bits is optional. An implementation may elect to ignore the setting of those fields.

Table 53 describes the packet format of the Set VLAN Filter command.

Table 53 – Set VLAN Filter command packet format

	Bits				
Bytes	**31..24**	**23..16**	**15..08**	**07..00**	
00..15	NC-SI Header				
16..19	Reserved		User Priority/CFI	VLAN ID	
20..23	Reserved		Filter Selector	Reserved	E
24..27	Checksum				
28..45	Pad				

Table 54 provides possible settings for the Filter Selector field. Table 55 provides possible settings for the Enable (E) field.

Table 54 – Possible settings for Filter Selector field (8-bit field)

Value	Description
1	Settings for VLAN filter number 1
2	Settings for VLAN filter number 2
..	
N	Settings for VLAN filter number *N*

Table 55 – Possible settings for Enable (E) field (1-bit field)

Value	Description
0b	Disable this VLAN filter
1b	Enable this VLAN filter

STANDARDSISO.COM : Click to view the full PDF of ISO/IEC 24079:2024

© ISO/IEC 2024 – All rights reserved

5.4.4.26 Set VLAN Filter response (0x8B)

The channel shall, in the absence of a checksum error or identifier mismatch, always accept the Set VLAN Filter command and send a response (see Table 56).

Table 56 – Set VLAN Filter response packet format

	Bits			
Bytes	**31..24**	**23..16**	**15..08**	**07..00**
00..15	NC-SI Header			
16..19	Response Code		Reason Code	
20..23	Checksum			
24..45	Pad			

Table 57 describes the reason code that is specific to the Set VLAN Filter command.

Table 57 – Set VLAN Filter command-specific reason code

Value	Description	Comment
0x0B07	VLAN Tag Is Invalid	Returned when the VLAN ID is invalid (VLAN ID = 0)

5.4.4.27 Enable VLAN command (0x0C)

The Enable VLAN command may be used by the Management Controller to enable the channel to accept VLAN-tagged packets from the network for NC-SI Pass-through operation (see Table 58).

Table 58 – Enable VLAN command packet format

	Bits			
Bytes	**31..24**	**23..16**	**15..08**	**07..00**
00..15	NC-SI Header			
16..19	Reserved			Mode #
20..23	Checksum			
24..45	Pad			

Table 59 describes the modes for the Enable VLAN command.

Table 59 – VLAN Enable modes

Mode	#	O/M	Description
Reserved	0x00	N/A	Reserved
VLAN only	0x01	M	Only VLAN-tagged packets that match the enabled VLAN Filter settings (and also match the MAC Address Filtering configuration) are accepted. Non-VLAN-tagged packets are not accepted.

STANDARDSISO.COM : Click to view the full PDF of ISO/IEC 24079:2024

© ISO/IEC 2024 – All rights reserved

Mode	#	O/M	Description
VLAN + non-VLAN	0x02	O	VLAN-tagged packets that match the enabled VLAN Filter settings (and also match the MAC Address Filtering configuration) are accepted. Non-VLAN-tagged packets (that also match the MAC Address Filtering configuration) are also accepted.
Any VLAN + non-VLAN	0x03	O	Any VLAN-tagged packets that also match the MAC Address Filtering configuration are accepted, regardless of the VLAN Filter settings. Non-VLAN-tagged packets (that also match the MAC Address Filtering configuration) are also accepted.
Reserved	0x04–0xFF	N/A	Reserved

5.4.4.28 Enable VLAN response (0x8C)

The channel shall, in the absence of a checksum error or identifier mismatch, always accept the Enable VLAN command and send a response.

Currently no command-specific reason code is identified for this response (see Table 60).

Table 60 – Enable VLAN response packet format

	Bits			
Bytes	**31..24**	**23..16**	**15..08**	**07..00**
00..15	NC-SI Header			
16..19	Response Code		Reason Code	
20..23	Checksum			
24..45	Pad			

5.4.4.29 Disable VLAN command (0x0D)

The Disable VLAN command may be used by the Management Controller to disable VLAN filtering. In the disabled state, only non-VLAN-tagged packets (that also match the MAC Address Filtering configuration) are accepted. VLAN-tagged packets are not accepted.

Table 61 describes the packet format of the Disable VLAN command.

Table 61 – Disable VLAN command packet format

	Bits			
Bytes	**31..24**	**23..16**	**15..08**	**07..00**
00..15	NC-SI Header			
16..19	Checksum			
20..45	Pad			

STANDARDSISO.COM : Click to view the full PDF of ISO/IEC 24079:2024

© ISO/IEC 2024 – All rights reserved

5.4.4.30 Disable VLAN response (0x8D)

The channel shall, in the absence of a checksum error or identifier mismatch, always accept the Disable VLAN command and send a response.

Currently no command-specific reason code is identified for this response (see Table 62).

Table 62 – Disable VLAN response packet format

	Bits			
Bytes	**31..24**	**23..16**	**15..08**	**07..00**
00..15	NC-SI Header			
16..19	Response Code		Reason Code	
20..23	Checksum			
24..45	Pad			

5.4.4.31 Set MAC Address command (0x0E)

The Set MAC Address command is used by the Management Controller to program the channel's unicast or multicast MAC address filters.

The channel supports one or more "perfect match" MAC address filters that are used to selectively forward inbound frames to the Management Controller. Assuming that a packet passes any VLAN filtering that may be active, it will be forwarded to the Management Controller if its 48-bit destination MAC address exactly matches an active MAC address filter.

MAC address filters may be configured as unicast or multicast addresses, depending on the capability of the channel. The channel may implement three distinct filter types:

- **Unicast filters** support exact matching on 48-bit unicast MAC addresses (AT = `0x0` only).
- **Multicast filters** support exact matching on 48-bit multicast MAC addresses (AT = `0x1` only).
- **Mixed filters** support matching on both unicast and multicast MAC addresses. (AT=`0x0` or AT=`0x1`)

The number of each type of filter that is supported by the channel can be discovered by means of the Get Capabilities command. The channel shall support at least one unicast address filter or one mixed filter, so that at least one unicast MAC address filter may be configured on the channel. Support for any combination of unicast, multicast, or mixed filters beyond this basic requirement is vendor specific. The total number of all filters shall be less than or equal to 8.

To configure an address filter, the Management Controller issues a Set MAC Address command with the Address Type field indicating the type of address to be programmed (unicast or multicast) and the MAC Address Num field indicating the specific filter to be programmed.

Filters are addressed using a 1-based index ordered over the unicast, multicast, and mixed filters reported by means of the Get Capabilities command. For example, if the interface reports four unicast filters, two multicast filters, and two mixed filters, then MAC Address numbers 1 through 4 refer to the interface's unicast filters, 5 and 6 refer to the multicast filters, and 7 and 8 refer to the mixed filters. Similarly, if the interface reports two unicast filters, no multicast filters, and six mixed filters, then MAC address numbers 1 and 2 refer to the unicast filters, and 3 through 8 refer to the mixed filters.

STANDARDSISO.COM : Click to view the full PDF of ISO/IEC 24079:2024

© ISO/IEC 2024 – All rights reserved

The filter type of the filter to be programmed (unicast, multicast, or mixed) shall be compatible with the Address Type being programmed. For example, programming a mixed filter to a unicast address is allowed, but programming a multicast filter to a unicast address is an error.

The Enable field determines whether the indicated filter is to be enabled or disabled. When a filter is programmed to be enabled, the filter is loaded with the 48-bit MAC address in the MAC Address field of the command, and the channel enables forwarding of frames that match the configured address. If the specified filter was already enabled, it is updated with the new address provided.

When a filter is programmed to be disabled, the contents of the MAC Address field are ignored. Any previous MAC address programmed in the filter is discarded and the channel no longer uses this filter in its packet-forwarding function.

Only unicast MAC addresses, specified with AT set to `0x0`, should be used in source MAC address checking and for determining the NC-SI channel for Pass-through transmit traffic.

Table 63 describes the packet format of the Set MAC Address command.

Table 63 – Set MAC Address command packet format

	Bits					
Bytes	**31..24**	**23..16**	**15..08**	**07..00**		
00..15	NC-SI Header					
16..19	MAC Address byte 5	MAC Address byte 4	MAC Address byte 3	MAC Address byte 2		
20..23	MAC Address byte 1	MAC Address byte 0	MAC Address Num	AT	Reserved	E
24..27	Checksum					
28..45	Pad					
NOTE AT = Address Type, E = Enable.						

Table 64 provides possible settings for the MAC Address Number field. Table 65 provides possible settings for the Address Type (AT) field. Table 66 provides possible settings for the Enable (E) field.

Table 64 – Possible settings for MAC Address Number (8-bit field)

Value	Description
`0x01`	Configure MAC address filter number 1
`0x02`	Configure MAC address filter number 2
..	
N	Configure MAC address filter number *N*

Table 65 – Possible settings for Address Type (3-bit field)

Value	Description
`0x0`	Unicast MAC address
`0x1`	Multicast MAC address
`0x2`–`0x7`	Reserved

STANDARDSISO.COM : Click to view the full PDF of ISO/IEC 24079:2024

© ISO/IEC 2024 – All rights reserved

Table 66 – Possible settings for Enable Field (1-bit field)

Value	Description
0b	Disable this MAC address filter
1b	Enable this MAC address filter

5.4.4.32 Set MAC Address response (0x8E)

The channel shall, in the absence of a checksum error or identifier mismatch, always accept the Set MAC Address command and send a response (see Table 67).

Table 67 – Set MAC Address response packet format

	Bits			
Bytes	**31..24**	**23..16**	**15..08**	**07..00**
00..15	NC-SI Header			
16..19	Response Code		Reason Code	
20..23	Checksum			
24..45	Pad			

Table 68 describes the reason code that is specific to the Set MAC Address command.

Table 68 – Set MAC Address command-specific reason code

Value	Description	Comment
0x0E08	MAC Address Is Zero	Returned when the Set MAC Address command is received with the MAC address set to 0

5.4.4.33 Enable Broadcast Filter command (0x10)

The Enable Broadcast Filter command allows the Management Controller to control the forwarding of broadcast frames to the Management Controller. The channel, upon receiving and processing this command, shall filter all received broadcast frames based on the broadcast packet filtering settings specified in the payload. If no broadcast packet types are specified for forwarding, all broadcast packets shall be filtered out.

The Broadcast Packet Filter Settings field is used to specify those protocol-specific broadcast filters that should be activated. The channel indicates which broadcast filters it supports in the Broadcast Filter Capabilities field of the Get Capabilities Response frame that clause 5.4.4.46 defines.

Table 69 describes the packet format of the Enable Broadcast Filter command.

Table 69 – Enable Broadcast Filter command packet format

	Bits			
Bytes	**31..24**	**23..16**	**15..08**	**07..00**
00..15	NC-SI Header			
16..19	Broadcast Packet Filter Settings			
20..23	Checksum			

STANDARDSISO.COM : Click to view the full PDF of ISO/IEC 24079:2024

© ISO/IEC 2024 – All rights reserved

24..45	Pad

Table 70 describes the Broadcast Packet Filter Settings field bit definitions.

Table 70 – Broadcast Packet Filter Settings field

Bit position	Field description	Value description
0	ARP Packets	`1b` = Forward this packet type to the Management Controller. `0b` = Filter out this packet type. For the purposes of this specification, an ARP broadcast packet is defined to be any packet that meets all of the following requirements: • The destination MAC address field is set to the layer 2 broadcast address (`FF:FF:FF:FF:FF:FF`). • The EtherType field set to `0x0806`. This field is mandatory.
1	DHCP Client Packets	`1b` = Forward this packet type to the Management Controller. `0b` = Filter out this packet type. For the purposes of this filter, a DHCP client broadcast packet is defined to be any packet that meets all of the following requirements: • The destination MAC address field is set to the layer 2 broadcast address (`FF:FF:FF:FF:FF:FF`). • The EtherType field is set to `0x0800` (IPv4). • The IP header's Protocol field is set to 17 (UDP). • The UDP destination port number is set to 68. This field is optional. If unsupported, broadcast DHCP client packets will be blocked when broadcast filtering is enabled. The value shall be set to 0 if unsupported.
2	DHCP Server Packets	`1b` = Forward this packet type to the Management Controller. `0b` = Filter out this packet type. For the purposes of this filter, a DHCP server broadcast packet is defined to be any packet that meets all of the following requirements: • The destination MAC address field is set to the layer 2 broadcast address (`FF:FF:FF:FF:FF:FF`). • The EtherType field is set to `0x0800` (IPv4). • The IP header's Protocol field is set to 17 (UDP). • The UDP destination port number is set to 67. This field is optional. If unsupported, broadcast DHCP packets will be blocked when broadcast filtering is enabled. The value shall be set to 0 if unsupported.
3	NetBIOS Packets	`1b` = Forward this packet type to the Management Controller. `0b` = Filter out this packet type. For the purposes of this filter, NetBIOS broadcast packets are defined to be any packet that meets all of the following requirements: • The destination MAC address field is set to the layer 2 broadcast address (`FF:FF:FF:FF:FF:FF`). • The EtherType field is set to `0x0800` (IPv4). • The IP header's Protocol field is set to 17 (UDP). • The UDP destination port number is set to 137 for NetBIOS Name Service or 138 for NetBIOS Datagram Service, per the assignment of IANA well-known ports. This field is optional. If unsupported, broadcast NetBIOS packets will be blocked when broadcast filtering is enabled. The value shall be set to 0 if unsupported.
4..31	Reserved	None

STANDARDSISO.COM : Click to view the full PDF of ISO/IEC 24079:2024

© ISO/IEC 2024 – All rights reserved

5.4.4.34 Enable Broadcast Filter response (0x90)

The channel shall, in the absence of a checksum error or identifier mismatch, always accept the Enable Broadcast Filter command and send a response.

Currently no command-specific reason code is identified for this response (see Table 71).

Table 71 – Enable Broadcast Filter response packet format

	Bits			
Bytes	**31..24**	**23..16**	**15..08**	**07..00**
00..15	NC-SI Header			
16..19	Response Code		Reason Code	
20..23	Checksum			
24..45	Pad			

5.4.4.35 Disable Broadcast Filter command (0x11)

The Disable Broadcast Filter command may be used by the Management Controller to disable the broadcast filter feature and enable the reception of all broadcast frames. Upon processing this command, the channel shall discontinue the filtering of received broadcast frames.

Table 72 describes the packet format of the Disable Broadcast Filter command.

Table 72 – Disable Broadcast Filter command packet format

	Bits			
Bytes	**31..24**	**23..16**	**15..08**	**07..00**
00..15	NC-SI Header			
16..19	Checksum			
20..45	Pad			

5.4.4.36 Disable Broadcast Filter response (0x91)

The channel shall, in the absence of a checksum error or identifier mismatch, always accept the Disable Broadcast Filter command and send a response.

Currently no command-specific reason code is identified for this response (see Table 73).

Table 73 – Disable Broadcast Filter response packet format

	Bits			
Bytes	**31..24**	**23..16**	**15..08**	**07..00**
00..15	NC-SI Header			
16..19	Response Code		Reason Code	
20..23	Checksum			
24..45	Pad			

STANDARDSISO.COM : Click to view the full PDF of ISO/IEC 24079:2024

© ISO/IEC 2024 – All rights reserved

5.4.4.37 Enable Global Multicast Filter command (0x12)

The Enable Global Multicast Filter command is used to activate global filtering of multicast frames with optional filtering of specific multicast protocols. Upon receiving and processing this command, the channel shall only deliver multicast frames that match specific multicast MAC addresses enabled for Pass through using this command or the Set MAC Address command.

The Multicast Packet Filter Settings field is used to specify optional, protocol-specific multicast filters that should be activated. The channel indicates which optional multicast filters it supports in the Multicast Filter Capabilities field of the Get Capabilities Response frame that clause 5.4.4.46 defines. The Management Controller should not set bits in the Multicast Packet Filter Settings field that are not indicated as supported in the Multicast Filter Capabilities field.

Neighbor Solicitation messages are sent to a Solicited Node multicast address that is derived from the target node's IPv6 address. This command may be used to enable forwarding of solicited node multicasts.

The IPv6 neighbor solicitation filter, as defined in this command, may not be supported by the Network Controller. In this case, the Management Controller may configure a multicast or mixed MAC address filter for the specific Solicited Node multicast address using the Set MAC Address command to enable forwarding of Solicited Node multicasts.

This command shall be implemented if the channel implementation supports accepting all multicast addresses. An implementation that does not support accepting all multicast addresses shall not implement these commands.

Pass-through packets with multicast addresses can still be accepted depending on multicast address filter support provided by the Set MAC Address command. Multicast filter entries that are set to be enabled in the Set MAC Address command are accepted; all others are rejected.

Table 74 illustrates the packet format of the Enable Global Multicast Filter command. Unsupported fields should be treated as reserved fields unless otherwise specified.

Table 74 – Enable Global Multicast Filter command packet format

	Bits			
Bytes	**31..24**	**23..16**	**15..08**	**07..00**
00..15	NC-SI Header			
16..19	Multicast Packet Filter Settings			
20..23	Checksum			
24..45	Pad			

Table 75 describes the bit definitions for the Multicast Packet Filter Settings field.

STANDARDSISO.COM : Click to view the full PDF of ISO/IEC 24079:2024

© ISO/IEC 2024 – All rights reserved

Table 75 – Bit definitions for Multicast Packet Filter Settings field

Bit position	Field description	Value description
0	IPv6 Neighbor Advertisement	`1b` = Forward this packet type to the Management Controller. `0b` = Filter out this packet type. For the purposes of this specification, an IPv6 Neighbor Advertisement multicast packet is defined to be any packet that meets all of the following requirements: • The destination MAC address field is set to a layer 2 multicast address of the form `33:33:00:00:00:01`. This address corresponds to the All_Nodes (`FF02::1`) multicast address. • The EtherType field is set to `0x86DD` (IPv6). • The IPv6 header's Next Header field is set to 58 (ICMPv6). • The ICMPv6 header's Message Type field is set to the following value: 136 – Neighbor Advertisement. This field is optional.
1	IPv6 Router Advertisement	`1b` = Forward this packet type to the Management Controller. `0b` = Filter out this packet type. For the purposes of this specification, an IPv6 Router Advertisement multicast packet is defined to be any packet that meets all of the following requirements: • The destination MAC address field is set to a layer 2 multicast address of the form `33:33:00:00:00:01`. This corresponds to the All_Nodes multicast address, `FF02::1`. • The EtherType field is set to `0x86DD` (IPv6). • The IPv6 header's Next Header field is set to 58 (ICMPv6). • The ICMPv6 header's Message Type field is set to 134. This field is optional.
2	DHCPv6 relay and server multicast	`1b` = Forward this packet type to the Management Controller. `0b` = Filter out this packet type. For the purposes of this filter, a DHCPv6 multicast packet is defined to be any packet that meets all of the following requirements: • The destination MAC address field is set to the layer 2 multicast address `33:33:00:01:00:02` or `33:33:00:01:00:03`. These correspond to the IPv6 multicast addresses `FF02::1:2` (All_DHCP_Relay_Agents_and_Servers) and `FF05::1:3` (All_DHCP_Servers). • The EtherType field is set to `0x86DD` (IPv6). • The IPv6 header's Next Header field is set to 17 (UDP). • The UDP destination port number is set to 547. This field is optional.
3	DHCPv6 multicasts from server to clients listening on well-known UDP ports	`1b` = Forward this packet type to the Management Controller. `0b` = Filter out this packet type. For the purposes of this filter, a DHCPv6 multicast packet is defined to be any packet that meets all of the following requirements: • The destination MAC address field is set to the layer 2 multicast address `33:33:00:01:00:02`. These correspond to the IPv6 multicast addresses `FF02::1:2` (All_DHCP_Relay_Agents_and_Servers). • The EtherType field is set to `0x86DD` (IPv6). • The IPv6 header's Next Header field is set to 17 (UDP). • The UDP destination port number is set to 546. This field is optional.

STANDARDSISO.COM : Click to view the full PDF of ISO/IEC 24079:2024

© ISO/IEC 2024 – All rights reserved

Bit position	Field description	Value description
4	IPv6 MLD	`1b` = Forward this packet type to the Management Controller. `0b` = Filter out this packet type. For the purposes of this specification, an IPv6 MLD packet is defined to be any packet that meets all of the following requirements: • The destination MAC address field is set to a layer 2 multicast address of the form `33:33:00:00:00:01`. This address corresponds to the All_Nodes (`FF02::1`) multicast address. • The EtherType field is set to `0x86DD` (IPv6). • The IPv6 header's Next Header field is set to 58 (ICMPv6). • The ICMPv6 header's Message Type field is set to one of the following values: 130 (Multicast Listener Query), 131 (Multicast Listener Report), 132 (Multicast Listener Done) This field is optional.
5	IPv6 Neighbor Solicitation	`1b` = Forward this packet type to the Management Controller. `0b` = Filter out this packet type. For the purposes of this specification, an IPv6 MLD packet is defined to be any packet that meets all of the following requirements: • The destination MAC address field is set to a layer 2 multicast address of the form `33:33:FF:XX:XX:XX`. This address corresponds to the Solicited Note multicast address where the last three bytes of the destination MAC address are ignored for this filter. • The EtherType field is set to `0x86DD` (IPv6). • The IPv6 header's Next Header field is set to 58 (ICMPv6). • The ICMPv6 header's Message Type field is set to one of the following values: 135. This field is optional. IMPLEMENTATION NOTE Enabling of this filter results in receiving all IPv6 neighbor solicitation traffic on this channel. If IPv6 neighbor solicitation traffic for a specific multicast address is of interest, then it is recommended that the MC uses a multicast address filter (configured for the multicast address using the Set MAC Address command) instead of this filter.
31..6	Reserved	None

5.4.4.38 Enable Global Multicast Filter response (0x92)

The channel shall, in the absence of a checksum error or identifier mismatch, always accept the Enable Global Multicast Filter command and send a response.

Currently no command-specific reason code is identified for this response (see Table 76).

Table 76 – Enable Global Multicast Filter response packet format

	Bits			
Bytes	**31..24**	**23..16**	**15..08**	**07..00**
00..15	NC-SI Header			
16..19	Response Code		Reason Code	
20..23	Checksum			
24..45	Pad			

STANDARDSISO.COM : Click to view the full PDF of ISO/IEC 24079:2024

5.4.4.39 Disable Global Multicast Filter command (0x13)

The Disable Global Multicast Filter command is used to disable global filtering of multicast frames. Upon receiving and processing this command, and regardless of the current state of multicast filtering, the channel shall forward all multicast frames to the Management Controller.

This command shall be implemented on the condition that the channel implementation supports accepting all multicast addresses. An implementation that does not support accepting all multicast addresses shall not implement these commands. Pass-through packets with multicast addresses can still be accepted depending on multicast address filter support provided by the Set MAC Address command. Packets with destination addresses matching multicast filter entries that are set to enabled in the Set MAC Address command are accepted; all others are rejected.

Table 77 describes the packet format of the Disable Global Multicast Filter command.

Table 77 – Disable Global Multicast Filter command packet format

	Bits			
Bytes	**31..24**	**23..16**	**15..08**	**07..00**
00..15	NC-SI Header			
16..19	Checksum			
20..45	Pad			

5.4.4.40 Disable Global Multicast Filter response (0x93)

In the absence of any errors, the channel shall process and respond to the Disable Global Multicast Filter command by sending the response packet that Table 78 shows.

Currently no command-specific reason code is identified for this response.

Table 78 – Disable Global Multicast Filter response packet format

	Bits			
Bytes	**31..24**	**23..16**	**15..08**	**07..00**
00..15	NC-SI Header			
16..19	Response Code		Reason Code	
20..23	Checksum			
24..45	Pad			

5.4.4.41 Set NC-SI Flow Control command (0x14)

The Set NC-SI Flow Control command allows the Management Controller to configure IEEE 802.3 pause packet flow control on the NC-SI.

The Set NC-SI Flow Control command is addressed to the package, rather than to a particular channel (that is, the command is sent with a Channel ID where the Package ID subfield matches the ID of the intended package and the Internal Channel ID subfield is set to `0x1F`).

STANDARDSISO.COM : Click to view the full PDF of ISO/IEC 24079:2024

© ISO/IEC 2024 – All rights reserved

When enabled for flow control, a channel may direct the package to generate and renew 802.3x (XOFF) PAUSE Frames for a maximum interval of T12 for a single congestion condition. If the congestion condition remains in place after a second T12 interval expires, the congested channel shall enter the Initial State and remove its XOFF request to the package. Note that some implementations may have shared buffering arrangements where all channels within the package become congested simultaneously. Also note that if channels become congested independently, the package may not immediately go into the XON state after T12 if other channels within the package are still requesting XOFF.

The setting of IEEE 802.3 pause packet flow control on the NC-SI is independent from any arbitration scheme, if any is used.

Table 79 describes the packet format of the Set NC-SI Flow Control command.

Table 79 – Set NC-SI Flow Control command packet format

	Bits			
Bytes	**31..24**	**23..16**	**15..08**	**07..00**
00..15	NC-SI Header			
16..19	Reserved			Flow Control Enable
20..23	Checksum			
24..45	Pad			

Table 80 describes the values for the Flow Control Enable field.

Table 80 – Values for the Flow Control Enable field (8-bit field)

Value	Description
`0x0`	Disables NC-SI flow control
`0x1`	Enables Network Controller to Management Controller flow control frames (Network Controller generates flow control frames) This field is optional.
`0x2`	Enables Management Controller to Network Controller flow control frames (Network Controller accepts flow control frames) This field is optional.
`0x3`	Enables bi-directional flow control frames This field is optional.
`0x4..0xFF`	Reserved

5.4.4.42 Set NC-SI Flow Control response (0x94)

The package shall, in the absence of a checksum error or identifier mismatch, always accept the Set NC-SI Flow Control command and send a response (see Table 81).

STANDARDSISO.COM : Click to view the full PDF of ISO/IEC 24079:2024

© ISO/IEC 2024 – All rights reserved

Table 81 – Set NC-SI Flow Control response packet format

	Bits			
Bytes	**31..24**	**23..16**	**15..08**	**07..00**
00..15	NC-SI Header			
16..19	Response Code		Reason Code	
20..23	Checksum			
24..45	Pad			

Table 82 describes the reason code that is specific to the Set NC-SI Flow Control command.

Table 82 – Set NC-SI Flow Control command-specific reason code

Value	Description	Comment
`0x1409`	Independent transmit and receive enable/disable control is not supported	Returned when the implementation requires that both transmit and receive flow control be enabled and disabled simultaneously

5.4.4.43 Get Version ID command (0x15)

The Get Version ID command may be used by the Management Controller to request the channel to provide the controller and firmware type and version strings listed in the response payload description.

Table 83 describes the packet format of the Get Version ID command.

Table 83 – Get Version ID command packet format

	Bits			
Bytes	**31..24**	**23..16**	**15..08**	**07..00**
00..15	NC-SI Header			
16..19	Checksum			
20..45	Pad			

5.4.4.44 Get Version ID Response (0x95)

The channel shall, in the absence of an error, always accept the Get Version ID command and send the response packet as Table 84 shows. Currently no command-specific reason code is identified for this response.

Table 84 – Get Version ID response packet format

	Bits			
Bytes	**31..24**	**23..16**	**15..08**	**07..00**
00..15	NC-SI Header			
16..19	Response Code		Reason Code	
20..23	NC-SI Version			
	Major	Minor	Update	Alpha1
24..27	reserved	reserved	reserved	Alpha2
28..31	Firmware Name String (11-08)			

STANDARDSISO.COM : Click to view the full PDF of ISO/IEC 24079:2024

© ISO/IEC 2024 – All rights reserved

	Bits			
Bytes	**31..24**	**23..16**	**15..08**	**07..00**
32..35	Firmware Name String (07-04)			
36..39	Firmware Name String (03-00)			
40..43	Firmware Version			
	MS-byte (3)	Byte (2)	Byte (1)	LS-byte (0)
44..47	PCI DID		PCI VID	
48..51	PCI SSID		PCI SVID	
52..55	Manufacturer ID (IANA)			
56..59	Checksum			

5.4.4.44.1 NC-SI Version encoding

The NC-SI Version field holds the version number of the NC-SI specification with which the controller is compatible. The version field shall be encoded as follows:

- The 'major', 'minor', and 'update' bytes are BCD-encoded, and each byte holds two BCD digits.
- The 'alpha' byte holds an optional alphanumeric character extension that is encoded using the ISO/IEC 8859-1 Character Set.
- The semantics of these fields follow the semantics specified in DSP4014.
- The value `0x00` in the Alpha1 or Alpha2 fields means that the corresponding alpha field is not used. The Alpha1 field shall be used first.
- The value `0xF` in the most-significant nibble of a BCD-encoded value indicates that the most-significant nibble should be ignored and the overall field treated as a single digit value.
- A value of `0xFF` in the update field indicates that the entire field is not present. `0xFF` is not allowed as a value for the major or minor fields.

EXAMPLE: Version 3.7.10a → `0xF3F7104100`
Version 10.01.7 → `0x1001F70000`
Version 3.1 → `0xF3F1FF0000`
Version 1.0a → `0xF1F0FF4100`
Version 1.0ab → `0xF1F0FF4142` (Alpha1 = `0x41`, Alpha2 = `0x42`)

5.4.4.44.2 Firmware Name encoding

The Firmware Name String shall be encoded using the ISO/IEC 8859-1 Character Set. Strings are left-justified where the leftmost character of the string occupies the most-significant byte position of the Firmware Name String field, and characters are populated starting from that byte position. The string is null terminated if the string is smaller than the field size. That is, the delimiter value, `0x00`, follows the last character of the string if the string occupies fewer bytes than the size of the field allows.

A delimiter is not required if the string occupies the full size of the field. Bytes following the delimiter (if any) should be ignored and can be any value.

STANDARDSISO.COM : Click to view the full PDF of ISO/IEC 24079:2024

© ISO/IEC 2024 – All rights reserved

5.4.4.44.3 Firmware Version encoding

To facilitate a common way of representing and displaying firmware version numbers across different vendors, each byte is hexadecimal encoded where each byte in the field holds two hexadecimal digits. The Firmware Version field shall be encoded as follows. The bytes are collected into a single 32-bit field where each byte represents a different 'point number' of the overall version. The selection of values that represent a particular version of firmware is specific to the Network Controller vendor.

Software displaying these numbers should not suppress leading zeros, which should help avoid user confusion in interpreting the numbers. For example, consider the two values `0x05` and `0x31`. Numerically, the byte `0x31` is greater that `0x05`, but if leading zeros were incorrectly suppressed, the two displayed values would be ".5" and ".31", respectively, and a user would generally interpret 0.5 as representing a greater value than 0.31 instead of 0.05 being smaller than 0.31. Similarly, if leading zeros were incorrectly suppressed, the value `0x01` and `0x10` would be displayed as 0.1 and 0.10, which could potentially be misinterpreted as representing the same version instead of 0.01 and 0.10 versions.

EXAMPLE: `0x00030217` → Version 00.03.02.17
`0x010100A0` → Version 01.01.00.A0

5.4.4.44.4 PCI ID fields

These fields (PCI DID, PCI VID, PCI SSID, PCI SVID) hold the PCI ID information for the Network Controller when the Network Controller incorporates a PCI or PCI Express™ interface that provides a host network interface connection that is shared with the NC-SI connection to the network.

If this field is not used, the values shall all be set to zeros (`0x0000`). Otherwise, the fields shall hold the PCI ID information for the host interface as defined by the version of the PCI/PCI Express™ specification to which the device's interface was designed.

5.4.4.44.5 Manufacturer ID (IANA) field

The Manufacturer ID holds the IANA Enterprise Number for the manufacturer of the Network Controller as a 32-bit binary number. If the field is unused, the value shall be set to `0xFFFFFFFF`.

5.4.4.45 Get Capabilities command (0x16)

The Get Capabilities command is used to discover additional optional functions supported by the channel, such as the number of unicast/multicast addresses supported, the amount of buffering in bytes available for packets bound for the Management Controller, and so on.

Table 85 describes the packet format for the Get Capabilities command.

Table 85 – Get Capabilities command packet format

	Bits			
Bytes	**31..24**	**23..16**	**15..08**	**07..00**
00..15	NC-SI Header			
16..19	Checksum			
20..45	Pad			

STANDARDSISO.COM : Click to view the full PDF of ISO/IEC 24079:2024

5.4.4.46 Get Capabilities response (0x96)

In the absence of any errors, the channel shall process and respond to the Get Capabilities Command and send the response packet as

Table 86 shows. Currently no command-specific reason code is identified for this response.

Table 86 – Get Capabilities response packet format

	Bits			
Bytes	**31..24**	**23..16**	**15..08**	**07..00**
00..15	NC-SI Header			
16..19	Response Code		Reason Code	
20..23	Capabilities Flags			
24..27	Broadcast Packet Filter Capabilities			
28..31	Multicast Packet Filter Capabilities			
32..35	Buffering Capability			
36..39	AEN Control Support			
40..43	VLAN Filter Count	Mixed Filter Count	Multicast Filter Count	Unicast Filter Count
44..47	Reserved		VLAN Mode Support	Channel Count
48..51	Checksum			

5.4.4.46.1 Capabilities Flags field

The Capabilities Flags field indicates which optional features of this specification the channel supports, as Table 87 describes.

Table 87 – Capabilities Flags bit definitions

Bit position	Field description	Value description
0	Hardware Arbitration Capability	0b = Hardware arbitration capability is not supported by the package. 1b = Hardware arbitration capability is supported by the package.
1	Host NC Driver Status	0b = Host NC Driver Indication status is not supported. 1b = Host NC Driver Indication status is supported. See Table 49 for the definition of Host NC Driver Indication Status.
2	Network Controller to Management Controller Flow Control Support	0b = Network Controller to Management Controller flow control is not supported. 1b = Network Controller to Management Controller flow control is supported.
3	Management Controller to Network Controller Flow Control Support	0b = Management Controller to Network Controller flow control is not supported. 1b = Management Controller to Network Controller flow control is supported.
4	All multicast addresses support	0b = The channel cannot accept all multicast addresses. The channel does not support enable/disable global multicast commands. 1b = The channel can accept all multicast addresses. The channel supports enable/disable global multicast commands.

STANDARDSISO.COM : Click to view the full PDF of ISO/IEC 24079:2024

© ISO/IEC 2024 – All rights reserved

Bit position	Field description	Value description
6..5	Hardware Arbitration Implementation Status	00b = Unknown 01b = Hardware arbitration capability is not implemented for the package on the given system. 10b = Hardware arbitration capability is implemented for the package on the given system. 11b = Reserved.
7..31	Reserved	Reserved

5.4.4.46.2 Broadcast Packet Filter Capabilities field

The Broadcast Packet Filter Capabilities field defines the optional broadcast packet filtering capabilities that the channel supports. The bit definitions for this field correspond directly with the bit definitions for the Broadcast Packet Filter Settings field defined for the Enable Broadcast Filter command in Table 70. A bit set to 1 indicates that the channel supports the filter associated with that Bit position; otherwise, the channel does not support that filter.

5.4.4.46.3 Multicast Packet Filter Capabilities field

The Multicast Packet Filter Capabilities field defines the optional multicast packet filtering capabilities that the channel supports. The bit definitions for this field correspond directly with the bit definitions for the Multicast Packet Filter Settings field defined for the Enable Global Multicast Filter command in Table 75. A bit set to 1 indicates that the channel supports the filter associated with that Bit position; otherwise, the channel does not support that filter.

5.4.4.46.4 Buffering Capability field

The Buffering Capability field defines the amount of buffering in bytes that the channel provides for inbound packets destined for the Management Controller.

The Management Controller may make use of this value in software-based Device Selection implementations to determine the relative time for which a specific channel may be disabled before it is likely to start dropping packets. A value of 0 indicates that the amount of buffering is unspecified.

5.4.4.46.5 AEN Control Support field

The AEN Control Support field indicates various standard AENs supported by the implementation. The format of the field is as Table 39 shows.

5.4.4.46.6 VLAN Filter Count field

The VLAN Filter Count field indicates the number of VLAN filters, up to 15, that the channel supports, as defined by the Set VLAN Filter command.

5.4.4.46.7 Mixed, Multicast, and Unicast Filter Count fields

The Mixed Filter Count field indicates the number of mixed address filters that the channel supports. A mixed address filter can be used to filter on specific unicast or multicast MAC addresses.

STANDARDSISO.COM : Click to view the full PDF of ISO/IEC 24079:2024

© ISO/IEC 2024 – All rights reserved

The Multicast Filter Count field indicates the number of multicast MAC address filters that the channel supports.

The Unicast Filter Count field indicates the number of unicast MAC address filters that the channel supports.

The channel is required to support at least one unicast or mixed filter, such that at least one unicast MAC address can be configured on the interface. The total number of unicast, multicast, and mixed filters shall not exceed 8.

5.4.4.46.8 VLAN Mode Support field

The VLAN Mode Support field indicates various modes supported by the implementation. Table 88 defines the format of field.

Table 88 – VLAN Mode Support bit definitions

Bit position	Field description	Value description
0	VLAN only	1 = VLAN shall be supported in the implementation.
1	VLAN + non-VLAN	0 = Filtering 'VLAN + non-VLAN' traffic is not supported in the implementation. 1 = Filtering 'VLAN + non-VLAN' traffic is supported in the implementation.
2	Any VLAN + non-VLAN	0 = Filtering 'Any VLAN + non-VLAN' traffic is not supported in the implementation. 1 = Filtering 'Any VLAN + non-VLAN' traffic is supported in the implementation.
3..7	Reserved	0

5.4.4.46.9 Channel Count field

The Channel Count field indicates the number of channels supported by the Network Controller.

5.4.4.47 Get Parameters command (0x17)

The Get Parameters command can be used by the Management Controller to request that the channel send the Management Controller a copy of all of the currently stored parameter settings that have been put into effect by the Management Controller, plus "other" Host/Channel parameter values that may be added to the Get Parameters Response Payload.

Table 89 describes the packet format for the Get Parameters command.

Table 89 – Get Parameters command packet format

	Bits			
Bytes	31..24	23..16	15..08	07..00
00..15	NC-SI Header			
16..19	Checksum			
20..45	Pad			

5.4.4.48 Get Parameters response (0x97)

The channel shall, in the absence of a checksum error or identifier mismatch, always accept the Get Parameters command and send a response.

STANDARDSISO.COM : Click to view the full PDF of ISO/IEC 24079:2024

© ISO/IEC 2024 – All rights reserved

As Table 90 shows, each parameter shall return the value that was set by the Management Controller. If the parameter is not supported, 0 is returned. Currently no command-specific reason code is identified for this response.

The payload length of this response packet will vary according to how many MAC address filters or VLAN filters the channel supports. All supported MAC addresses are returned at the end of the packet, without any intervening padding between MAC addresses.

MAC addresses are returned in the following order: unicast filtered addresses first, followed by multicast filtered addresses, followed by mixed filtered addresses, with the number of each corresponding to those reported through the Get Capabilities command. For example, if the interface reports four unicast filters, two multicast filters, and two mixed filters, then MAC addresses 1 through 4 are those currently configured through the interface's unicast filters, MAC addresses 5 and 6 are those configured through the multicast filters, and 7 and 8 are those configured through the mixed filters. Similarly, if the interface reports two unicast filters, no multicast filters, and six mixed filters, then MAC addresses 1 and 2 are those currently configured through the unicast filters, and 3 through 8 are those configured through the mixed filters.

Table 90 – Get Parameters response packet format

	Bits			
Bytes	**31..24**	**23..16**	**15..08**	**07..00**
00..15	NC-SI Header			
16..19	Response Code		Reason Code	
20..23	MAC Address Count	Reserved		MAC Address Flags
24..27	VLAN Tag Count	Reserved	VLAN Tag Flags	
28..31	Link Settings			
32..35	Broadcast Packet Filter Settings			
36..39	Configuration Flags			
40..43	VLAN Mode	Flow Control Enable	Reserved	
44..47	AEN Control			
48..51	MAC Address 1 byte 5	MAC Address 1 byte 4	MAC Address 1 byte 3	MAC Address 1 byte 2
52..55[a]	MAC Address 1 byte 1	MAC Address 1 byte 0	MAC Address 2 byte 5	MAC Address 2 byte 4
56..59	MAC Address 2 byte 3	MAC Address 2 byte 2	MAC Address 2 byte 1	MAC Address 2 byte 0
variable	…			
	VLAN Tag 1		VLAN Tag 2	
	…			
	…		Pad (if needed)	
	Checksum			

[a] Variable fields can start at this byte offset.

Table 91 lists the parameters for which values are returned in this response packet.

STANDARDSISO.COM : Click to view the full PDF of ISO/IEC 24079:2024

© ISO/IEC 2024 – All rights reserved

The contents of the various configuration value fields, such as MAC Address, VLAN Tags, Link Settings, and Broadcast Packet Filter Settings, shall be considered valid only when the corresponding configuration bit is set (Enabled) in the Configuration Flags field.

Table 91 – Get Parameters data definition

Parameter field name	Description
MAC Address Count	The number of MAC addresses supported by the channel
MAC Address Flags	The enable/disable state for each supported MAC address See Table 92.
VLAN Tag Count	The number of VLAN Tags supported by the channel
VLAN Tag Flags	The enable/disable state for each supported VLAN Tag See Table 93.
Link Settings	The 32-bit Link Settings value as defined in the Set Link command
Broadcast Packet Filter Settings	The current 32-bit Broadcast Packet Filter Settings value
Configuration Flags	See Table 94.
VLAN Mode	See Table 59.
Flow Control Enable	See Table 80.
AEN Control	See Table 39.
MAC Address 1..8	The current contents of up to eight 6-byte MAC address filter values.
VLAN Tag 1..15	The current contents of up to 15 16-bit VLAN Tag filter values

Table 92 defines the format of the MAC Address Flags field.

Table 92 – MAC Address Flags bit definitions

Bit position	Field description	Value description
0	MAC address 1 status	0b = Default or unsupported or disabled 1b = Enabled
1	MAC address 2 status, or Reserved	0b = Default or unsupported or disabled 1b = Enabled
2	MAC address 3 status, or Reserved	0b = Default or unsupported or disabled 1b = Enabled
…	…	…
7	MAC address 8 status, or Reserved	0b = Default or unsupported or disabled 1b = Enabled

Table 93 defines the format of the VLAN Tag Flags field.

Table 93 – VLAN Tag Flags bit definitions

Bit position	Field description	Value description
0	VLAN Tag 1 status	0b = Default or unsupported or disabled 1b = Enabled
1	VLAN Tag 2 status, or Reserved	0b = Default or unsupported or disabled 1b = Enabled

STANDARDSISO.COM : Click to view the full PDF of ISO/IEC 24079:2024

© ISO/IEC 2024 – All rights reserved

Bit position	Field description	Value description
2	VLAN Tag 3 status, or Reserved	0b = Default or unsupported or disabled 1b = Enabled
…	…	…
14	VLAN Tag 15 status, or Reserved	0b = Default or unsupported or disabled 1b = Enabled

Table 94 defines the format of the Configuration Flags field.

Table 94 – Configuration Flags bit definitions

Bit position	Field description	Value description
0	Broadcast Packet Filter status	0b = Disabled 1b = Enabled
1	Channel Enabled	0b = Disabled 1b = Enabled
2	Channel Network TX Enabled	0b = Disabled 1b = Enabled
3	Global Multicast Packet Filter Status	0b = Disabled 1b = Enabled
4..31	Reserved	Reserved

STANDARDSISO.COM : Click to view the full PDF of ISO/IEC 24079:2024

5.4.4.49 Get Controller Packet Statistics command (0x18)

The Get Controller Packet Statistics command may be used by the Management Controller to request a copy of the aggregated packet statistics that the channel maintains for its external interface to the LAN network. The statistics are an aggregation of statistics for both the host side traffic and the NC-SI Pass-through traffic.

Table 95 describes the Get Controller Packet Statistics command packet format.

Table 95 – Get Controller Packet Statistics command packet format

	Bits			
Bytes	**31..24**	**23..16**	**15..08**	**07..00**
00..15	NC-SI Header			
16..19	Checksum			
20..45	Pad			

5.4.4.50 Get Controller Packet Statistics response (0x98)

The channel shall, in the absence of a checksum error or identifier mismatch, always accept the Get Controller Packet Statistics command and send the response packet as Table 96 shows.

The Get Controller Packet Statistics Response frame contains a set of statistics counters that monitor the LAN traffic in the Network Controller. Implementation of the counters listed in Table 97 is optional. The Network Controller shall return any unsupported counter with a value of `0xFFFFFFFF` for 32-bit counters and `0xFFFFFFFFFFFFFFFF` for 64-bit counters.

© ISO/IEC 2024 – All rights reserved

Table 96 – Get Controller Packet Statistics response packet format

	Bits			
Bytes	**31..24**	**23..16**	**15..08**	**07..00**
00..15	NC-SI Header			
16..19	Response Code		Reason Code	
20..23	Counters Cleared From Last Read (MS Bits)			
24..27	Counters Cleared From Last Read (LS Bits)			
28..35	Total Bytes Received			
36..43	Total Bytes Transmitted			
44..51	Total Unicast Packets Received			
52..59	Total Multicast Packets Received			
60..67	Total Broadcast Packets Received			
68..75	Total Unicast Packets Transmitted			
76..83	Total Multicast Packets Transmitted			
84..91	Total Broadcast Packets Transmitted			
92..95	FCS Receive Errors			
96..99	Alignment Errors			
100..103	False Carrier Detections			
104..107	Runt Packets Received			
108..111	Jabber Packets Received			
112..115	Pause XON Frames Received			
116..119	Pause XOFF Frames Received			
120..123	Pause XON Frames Transmitted			
124..127	Pause XOFF Frames Transmitted			
128..131	Single Collision Transmit Frames			
132..135	Multiple Collision Transmit Frames			
136..139	Late Collision Frames			
140..143	Excessive Collision Frames			
144..147	Control Frames Received			
148..151	64-Byte Frames Received			
152..155	65–127 Byte Frames Received			
156..159	128–255 Byte Frames Received			
160..163	256– 511 Byte Frames Received			
164..167	512–1023 Byte Frames Received			
168..171	1024–1522 Byte Frames Received			
172..175	1523–9022 Byte Frames Received			
176..179	64-Byte Frames Transmitted			
180..183	65–127 Byte Frames Transmitted			
184..187	128–255 Byte Frames Transmitted			
188..191	256–511 Byte Frames Transmitted			
192..195	512–1023 Byte Frames Transmitted			
196..199	1024–1522 Byte Frames Transmitted			
200..203	1523–9022 Byte Frames Transmitted			
204..211	Valid Bytes Received			
212..215	Error Runt Packets Received			

STANDARDSISO.COM : Click to view the full PDF of ISO/IEC 24079:2024

© ISO/IEC 2024 – All rights reserved

	Bits			
Bytes	**31..24**	**23..16**	**15..08**	**07..00**
216..219	Error Jabber Packets Received			
220..223	Checksum			

Table 97 – Get Controller Packet Statistics counters

Counter number	Name	Meaning
0	Total Bytes Received	Counts the number of bytes received
1	Total Bytes Transmitted	Counts the number of bytes transmitted
2	Total Unicast Packets Received	Counts the number of good (FCS valid) packets received that passed L2 filtering by a specific MAC address
3	Total Multicast Packets Received	Counts the number of good (FCS valid) multicast packets received
4	Total Broadcast Packets Received	Counts the number of good (FCS valid) broadcast packets received
5	Total Unicast Packets Transmitted	Counts the number of good (FCS valid) packets transmitted that passed L2 filtering by a specific MAC address
6	Total Multicast Packets Transmitted	Counts the number of good (FCS valid) multicast packets transmitted
7	Total Broadcast Packets Transmitted	Counts the number of good (FCS valid) broadcast packets transmitted
8	FCS Receive Errors	Counts the number of receive packets with FCS errors
9	Alignment Errors	Counts the number of receive packets with alignment errors
10	False Carrier Detections	Counts the false carrier errors reported by the PHY
11	Runt Packets Received	Counts the number of received frames that passed address filtering, were less than minimum size (64 bytes from <Destination Address> through <FCS>, inclusively), and had a valid FCS
12	Jabber Packets Received	Counts the number of received frames that passed address filtering, were greater than the maximum size, and had a valid FCS
13	Pause XON Frames Received	Counts the number of XON packets received from the network
14	Pause XOFF Frames Received	Counts the number of XOFF packets received from the network
15	Pause XOFF Frames Transmitted	Counts the number of XON packets transmitted to the network
16	Pause XOFF Frames Transmitted	Counts the number of XOFF packets transmitted to the network
17	Single Collision Transmit Frames	Counts the number of times that a successfully transmitted packet encountered a single collision
18	Multiple Collision Transmit Frames	Counts the number of times that a transmitted packet encountered more than one collision but fewer than 16
19	Late Collision Frames	Counts the number of collisions that occurred after one slot time (defined by IEEE 802.3)
20	Excessive Collision Frames	Counts the number of times that 16 or more collisions occurred on a single transmit packet
21	Control Frames Received	Counts the number of MAC control frames received that are *not* XON or XOFF flow control frames
22	64 Byte Frames Received	Counts the number of good packets received that are exactly 64 bytes (from <Destination Address> through <FCS>, inclusively) in length

STANDARDSISO.COM : Click to view the full PDF of ISO/IEC 24079:2024

© ISO/IEC 2024 – All rights reserved

Counter number	Name	Meaning
23	65–127 Byte Frames Received	Counts the number of good packets received that are 65–127 bytes (from <Destination Address> through <FCS>, inclusively) in length
24	128–255 Byte Frames Received	Counts the number of good packets received that are 128–255 bytes (from <Destination Address> through <FCS>, inclusively) in length
25	256–511 Byte Frames Received	Counts the number of good packets received that are 256–511 bytes (from <Destination Address> through <FCS>, inclusively) in length
26	512–1023 Byte Frames Received	Counts the number of good packets received that are 512–1023 bytes (from <Destination Address> through <FCS>, inclusively) in length
27	1024–1522 Byte Frames Received	Counts the number of good packets received that are 1024–1522 bytes (from <Destination Address> through <FCS>, inclusively) in length
28	1523–9022 Byte Frames Received	Counts the number of received frames that passed address filtering and were greater than 1523 bytes in length
29	64 Byte Frames Transmitted	Counts the number of good packets transmitted that are exactly 64 bytes (from <Destination Address> through <FCS>, inclusively) in length
30	65–127 Byte Frames Transmitted	Counts the number of good packets transmitted that are 65–127 bytes (from <Destination Address> through <FCS>, inclusively) in length
31	128–255 Byte Frames Transmitted	Counts the number of good packets transmitted that are 128–255 bytes (from <Destination Address> through <FCS>, inclusively) in length
32	256–511 Byte Frames Transmitted	Counts the number of good packets transmitted that are 256–511 bytes (from <Destination Address> through <FCS>, inclusively) in length
33	512–1023 Byte Frames Transmitted	Counts the number of good packets transmitted that are 512–1023 bytes (from <Destination Address> through <FCS>, inclusively) in length
34	1024–1522 Byte Frames Transmitted	Counts the number of good packets transmitted that are 1024–1522 bytes (from <Destination Address> through <FCS>, inclusively) in length
35	1523–9022 Byte Frames Transmitted	Counts the number of transmitted frames that passed address filtering and were greater than 1523 in length
36	Valid Bytes Received	Counts the bytes received in all packets that did not manifest any type of error
37	Error Runt Packets Received	Counts the number of invalid frames that were less than the minimum size (64 bytes from <Destination Address> through <FCS>, inclusively)
38	Error Jabber Packets Received	Counts Jabber packets, which are defined as packets that exceed the programmed MTU size *and* have a bad FCS value

The Network Controller shall also indicate in the Counters Cleared from Last Read fields whether the corresponding field has been cleared by means other than NC-SI (possibly by the host) since it was last read by means of the NC-SI. Counting shall resume from 0 after a counter has been cleared. Table 98 shows the Counters Cleared from Last Read fields format.

Currently no command-specific reason code is identified for this response.

STANDARDSISO.COM : Click to view the full PDF of ISO/IEC 24079:2024

Table 98 – Counters Cleared from Last Read Fields format

Field	Bits	Mapped to counter numbers
MS Bits	0..6	32..38
	7..31	Reserved
LS Bits	0..31	0..31

IMPLEMENTATION NOTE The Get Controller Packet Statistics response contains the following counters related to flow control: Pause XON Frames Received, Pause XOFF Frames Received, Pause XON Frames Transmitted, and Pause XOFF Frames Transmitted. An implementation can optionally include Priority-Based Flow Control (PFC) packets in these counters.

© ISO/IEC 2024 – All rights reserved

5.4.4.51 Get NC-SI Statistics command (0x19)

In addition to the packet statistics accumulated on the LAN network interface, the channel separately accumulates a variety of NC-SI specific packet statistics for the channel.

The Get NC-SI Statistics command may be used by the Management Controller to request that the channel send a copy of all current NC-SI packet statistic values for the channel. The implementation may or may not include statistics for commands that are directed to the package.

Table 99 describes the packet format of the Get NC-SI Statistics command.

Table 99 – Get NC-SI Statistics command packet format

	Bits			
Bytes	**31..24**	**23..16**	**15..08**	**07..00**
00..15	NC-SI Header			
16..19	Checksum			
20..45	Pad			

5.4.4.52 Get NC-SI Statistics response (0x99)

In the absence of any error, the channel shall process and respond to the Get NC-SI Statistics command by sending the response packet and payload as Table 100 shows.

Table 100 – Get NC-SI Statistics response packet format

	Bits			
Bytes	**31..24**	**23..16**	**15..08**	**07..00**
00..15	NC-SI Header			
16..19	Response Code		Reason Code	
20..23	NC-SI Commands Received			
24..27	NC-SI Control Packets Dropped			
28..31	NC-SI Command Type Errors			
32..35	NC-SI Command Checksum Errors			
36..39	NC-SI Receive Packets			
40..43	NC-SI Transmit Packets			
44..47	AENs Sent			
48..51	Checksum			

STANDARDSISO.COM : Click to view the full PDF of ISO/IEC 24079:2024

© ISO/IEC 2024 – All rights reserved

The Get NC-SI Statistics Response frame contains a set of statistics counters that monitor the NC-SI traffic in the Network Controller.

Counters that are supported shall be reset to `0x0` when entering into the Initial State and after being read. Implementation of the counters that Table 101 shows is optional. The Network Controller shall return any unsupported counter with a value of `0xFFFFFFFF`. Counters may wraparound or stop if they reach `0xFFFFFFFE`. It is vendor specific how NC-SI commands that are sent to the package ID are included in the NC-SI statistics.

Currently no command-specific reason code is identified for this response.

Table 101 – Get NC-SI Statistics counters

Counter number	Name	Meaning
1	NC-SI Commands Received	For packets that are not dropped, this field returns the number of NC-SI Control packets received and identified as NC-SI commands.
2	NC-SI Control Packets Dropped	Counts the number of NC-SI Control packets that were received and dropped (Packets with correct FCS and EtherType, but are dropped for one of the other reasons listed in 5.2.9.2.1). NC-SI Control Packets that were dropped because the channel ID was not valid may not be included in this statistics counter.
3	NC-SI Unsupported Commands Received	Counts the number of NC-SI command packets that were received, but are not supported. (Network controller responded to the command with a Command Unsupported response code).
4	NC-SI Command Checksum Errors	Counts the number of NC-SI Control Packets that were received but dropped because of an invalid checksum (if checksum is provided and checksum validation is supported by the channel)
5	NC-SI Receive Packets	Counts the total number of NC-SI Control packets received. This count is the sum of NC-SI Commands Received and NC-SI Control Packets Dropped.
6	NC-SI Transmit Packets	Counts the total number of NC-SI Control packets transmitted to the Management Controller. This count is the sum of NC-SI responses sent and AENs sent.
7	AENs Sent	Counts the total number of AEN packets transmitted to the Management Controller

STANDARDSISO.COM : Click to view the full PDF of ISO/IEC 24079:2024

5.4.4.53 Get NC-SI Pass-through Statistics command (0x1A)

The Get NC-SI Pass-through Statistics command may be used by the Management Controller to request that the channel send a copy of all current NC-SI Pass-through packet statistic values.

Table 102 describes the packet format of the Get NC-SI Pass-through Statistics command.

Table 102 – Get NC-SI Pass-through Statistics command packet format

	Bits			
Bytes	**31..24**	**23..16**	**15..08**	**07..00**
00..15	NC-SI Header			
16..19	Checksum			
20..45	Pad			

© ISO/IEC 2024 – All rights reserved

5.4.4.54 Get NC-SI Pass-through Statistics response (0x9A)

In the absence of any error, the channel shall process and respond to the Get NC-SI Pass-through Statistics command by sending the response packet and payload that Table 103 shows.

Table 103 – Get NC-SI Pass-through Statistics response packet format

	Bits			
Bytes	**31..24**	**23..16**	**15..08**	**07..00**
00..15	NC-SI Header			
16..19	Response Code		Reason Code	
20..27	Pass-through TX Packets Received on NC-SI Interface (Management Controller to Network Controller)			
28..31	Pass-through TX Packets Dropped			
32..35	Pass-through TX Packet Channel State Errors			
36..39	Pass-through TX Packet Undersized Errors			
40..43	Pass-through TX Packet Oversized Errors			
44..47	Pass-through RX Packets Received on LAN Interface			
48..51	Total Pass-through RX Packets Dropped			
52..55	Pass-through RX Packet Channel State Errors			
56..59	Pass-through RX Packet Undersized Errors			
60..63	Pass-through RX Packet Oversized Errors			
64..67	Checksum			

The Get NC-SI Statistics Response frame contains a set of statistics counters that monitor the NC-SI Pass-through traffic in the Network Controller. Supported counters shall be reset to `0x0` when entering the Initial State and after being read.

Implementation of the counters that Table 104 shows is optional. The Network Controller shall return any unsupported counter with a value of `0xFFFFFFFF` for 32-bit counters and `0xFFFFFFFFFFFFFFFF` for 64-bit counters. Counters may wraparound or stop if they reach `0xFFFFFFFE` for 32-bit counters and `0xFFFFFFFFFFFFFFFE` for 64-bit counters.

Table 104 – Get NC-SI Pass-through Statistics counters

Counter number	Name	Meaning
1	Total Pass-through TX Packets Received (Management Controller to Channel)	Counts the number of Pass-through packets forwarded by the channel to the LAN
2	Total Pass-through TX Packets Dropped (Management Controller to Channel)	Counts the number of Pass-through packets from the Management Controller that were dropped by the Network Controller
3	Pass-through TX Packet Channel State Errors (Management Controller to Channel)	Counts the number of egress management packets (Management Controller to Network Controller) that were dropped because the channel was in the disabled state when the packet was received

STANDARDSISO.COM : Click to view the full PDF of ISO/IEC 24079:2024

© ISO/IEC 2024 – All rights reserved

Counter number	Name	Meaning
4	Pass-through TX Packet Undersized Errors (Management Controller to Channel)	Counts the number of Pass-through packets from the Management Controller that were undersized (under 64 bytes, including FCS)
5	Pass-through TX Packet Oversized Errors (Management Controller to Channel)	Counts the number of Pass-through packets from the Management Controller that were oversized (over 1522 bytes, including FCS)
6	Total Pass-through RX Packets Received On the LAN Interface (LAN to Channel)	Counts the number of Pass-through packets that were received on the LAN interface of the channel. This counter does not necessarily count the number of packets that were transmitted to the Management Controller, because some of the packets might have been dropped due to RX queue overflow.
7	Total Pass-through RX Packets Dropped (LAN to Channel)	Counts the number of Pass-through packets that were received on the LAN interface of the channel but were dropped and not transmitted to the Management Controller
8	Pass-through RX Packet Channel State Errors (LAN to Channel)	Counts the number of ingress management packets (channel to Management Controller) that were dropped because the channel was in the disabled state when the packet was received. The NC may also count packets that were dropped because the package was in the deselected state.
9	Pass-through RX Packet Undersized Errors (LAN to Channel)	Counts the number of Pass-through packets from the LAN that were undersized (under 64 bytes, including FCS)
10	Pass-through RX Packet Oversized Errors (LAN to Channel)	Counts the number of Pass-through packets from the LAN that were oversized (over 1522 bytes, including FCS)

Currently no command-specific reason code is identified for this response.

5.4.4.55 Get Package Status command (0x1B)

The Get Package Status command provides a way for a Management Controller to explicitly query the status of a package. The Get Package Status command is addressed to the package, rather than to a particular channel (that is, the command is sent with a Channel ID where the Package ID subfield matches the ID of the intended package and the Internal Channel ID subfield is set to `0x1F`).

Table 105 describes the packet format of the Get Package Status command.

Table 105 – Get Package Status packet format

	Bits			
Bytes	**31..24**	**23..16**	**15..08**	**07..00**
00..15	NC-SI Header			
20..23	Checksum			
24..45	Pad			

5.4.4.56 Get Package Status response (0x9B)

Currently no command-specific reason code is identified for this response (see Table 106).

STANDARDSISO.COM : Click to view the full PDF of ISO/IEC 24079:2024

Table 106 – Get Package Status response packet format

	Bits			
Bytes	**31..24**	**23..16**	**15..08**	**07..00**
00..15	NC-SI Header			
16..19	Response Code		Reason Code	
20..23	Package Status			
24..27	Checksum			
28..45	Pad			

Table 107 – Package Status field bit definitions

Bit position	Field description	Value description
0	Hardware Arbitration Status	`0b` = Hardware arbitration is non-operational (inactive) or unsupported. NOTE This means that hardware arbitration tokens are not flowing through this NC. `1b` = Hardware arbitration is supported, active, and implemented for the package on the given system.
31..1	Reserved	Reserved

5.4.4.57 OEM command (0x50)

The OEM command may be used by the Management Controller to request that the channel provide vendor-specific information. The Vendor Enterprise Number is the unique MIB/SNMP Private Enterprise number assigned by IANA per organization. Vendors are free to define their own internal data structures in the vendor data fields. Use of the optional checksum field is unspecified in OEM commands.

Table 108 describes the packet format of the OEM command.

Table 108 – OEM command packet format

	Bits			
Bytes	**31..24**	**23..16**	**15..08**	**07..00**
00..15	NC-SI Header			
16..19	Manufacturer ID (IANA)			
20…	Vendor-Data			

5.4.4.58 OEM response (0xD0)

The channel shall return the “Unknown Command Type” reason code for any unrecognized enterprise number, using the packet format that Table 109 shows. If the command is valid, the response, if any, is allowed to be

STANDARDSISO.COM : Click to view the full PDF of ISO/IEC 24079:2024

© ISO/IEC 2024 – All rights reserved

vendor-specific. The `0x8000` range is recommended for vendor-specific code. Use of the optional checksum field is unspecified in OEM responses. Currently no command-specific reason code is identified for this response.

Table 109 – OEM response packet format

	Bits			
Bytes	**31..24**	**23..16**	**15..08**	**07..00**
00..15	NC-SI Header			
16..19	Response Code		Reason Code	
20..23	Manufacturer ID (IANA)			
24…	Return Data (Optional)			

5.4.4.59 PLDM Request (0x51)

The PLDM Request Message may be used by the Management Controller to send PLDM commands over NC-SI/RBT. This command may be targeted at the entire package or a specific channel. Table 110 illustrates the packet format of the PLDM Request Message over NC-SI/RBT.

Table 110 – PLDM Request packet format

	Bits			
Bytes	**31..24**	**23..16**	**15..08**	**07..00**
00..15	NC-SI Header			
16..19	PLDM Message Common Fields			
20..	PLDM Message Payload (zero or more bytes) + Payload Pad (see 5.4.2.2.2)			
..	Checksum			
..	Ethernet Packet Pad (optional—See 5.4.2.2.4)			

Refer to the PLDM Base specification (DSP0240) for details on the PLDM Request Messages.

5.4.4.60 PLDM Response (0xD1)

The PLDM Response Message may be used by the Network Controller to send PLDM responses over NC-SI/RBT. The package shall, in the absence of a checksum error or identifier mismatch, always accept the PLDM Request Command and send a response.

Table 111 – PLDM Response packet format

	Bits			
Bytes	**31..24**	**23..16**	**15..08**	**07..00**
00..15	NC-SI Header			
16..19	Response Code		Reason Code	
20..23	PLDM Message Common Fields			PLDM Completion Code
24..	PLDM Message Payload (zero or more bytes) + Payload Pad (see 5.4.2.2.2)			
..	Checksum			
..	Ethernet Packet Pad (optional—See 5.4.2.2.4)			

STANDARDSISO.COM : Click to view the full PDF of ISO/IEC 24079:2024

© ISO/IEC 2024 – All rights reserved

Refer to the PLDM Base specification (DSP0240) for details on the PLDM Response Messages.

Note, the NC-SI PLDM Response (`0xD1`) response/reason codes are only used to report the support, success, or failure of the PLDM Request command (`0x51`) at the NC-SI over RBT messaging layer. The PLDM Completion Code is used for determining the success or failure of the encapsulated PLDM Commands at the PLDM messaging layer.

5.4.4.61 Get Package UUID command (0x52)

The Get Package UUID command may be used by the Management Controller to query Universally Unique Identifier (UUID), also referred to as a globally unique ID (GUID), of the Network Controller over NC-SI/RBT. This command is targeted at the entire package. This command can be used by the MC to correlate endpoints used on different NC-SI transports (such as, RBT, MCTP).

Table 112 illustrates the packet format of the Get Package UUID Command over NC-SI/RBT.

Table 112 – Get Package UUID command packet format

	Bits			
Bytes	**31..24**	**23..16**	**15..08**	**07..00**
00..15	NC-SI Header			
16..19	Checksum			
20..45	Pad			

5.4.4.62 Get Package UUID response (0xD2)

The package shall, in the absence of an error, always accept the Get Package UUID command and send the response packet that Table 113 shows. Currently no command-specific reason code is identified for this response.

Table 113 – Get Package UUID response packet format

	Bits			
Bytes	**31..24**	**23..16**	**15..08**	**07..00**
00..15	NC-SI Header			
16..19	Response Code		Reason Code	
20..35	UUID bytes 1:16, respectively			
36..39	Checksum			
40..45	Pad			

The individual fields within the UUID are stored most-significant byte (MSB) first per the convention described in RFC4122. RFC4122 specifies four different versions of UUID formats and generation algorithms suitable for use for a UUID. These are version 1 (`0001b`) "time based", and three "name-based" versions: version 3 (`0011b`) "MD5 hash", version 4 (`0100b`) "Pseudo-random", and version 5 "SHA1 hash". The version 1 format is recommended. However, versions 3, 4, or 5 formats are also allowed. See Table 114 for the UUID format version 1.

STANDARDSISO.COM : Click to view the full PDF of ISO/IEC 24079:2024

© ISO/IEC 2024 – All rights reserved

Table 114 – UUID format

Field	UUID byte	MSB
time low	1	MSB
	2	
	3	
	4	
time mid	5	MSB
	6	
time high and version	7	MSB
	8	
clock seq and reserved	9	MSB
	10	
node	11	MSB
	12	
	13	
	14	
	15	
	16	

5.4.5 AEN packet formats

5.4.5.1 Link Status Change AEN

The Link Status Change AEN indicates to the Management Controller any changes in the channel's external interface link status.

This AEN should be sent if any change occurred in the link status (that is, the actual link mode was changed). The Link Status and OEM Link Status fields reproduce the bit definitions defined in the Get Link Status Response Packet (see Table 48).

Table 115 illustrates the packet format of the Link Status Change AEN.

Table 115 – Link Status Change AEN packet format

	Bits			
Bytes	**31..24**	**23..16**	**15..08**	**07..00**
00..15	AEN Header			
16..19	Reserved			AEN Type = `0x00`
20..23	Link Status			
24.27	OEM Link Status			
28..31	Checksum			

5.4.5.2 Configuration Required AEN

The Configuration Required AEN indicates to the Management Controller that the channel is transitioning into the Initial State. (This AEN is not sent if the channel enters the Initial State because of a Reset Channel command.)

STANDARDSISO.COM : Click to view the full PDF of ISO/IEC 24079:2024

© ISO/IEC 2024 – All rights reserved

NOTE This AEN might not be generated in some situations in which the channel goes into the Initial State. For example, some types of hardware resets might not accommodate generating the AEN.

Table 116 illustrates the packet format of the Configuration Required AEN.

Table 116 – Configuration Required AEN packet format

	Bits			
Bytes	**31..24**	**23..16**	**15..08**	**07..00**
00..15	AEN Header			
16..19	Reserved			AEN Type = `0x01`
20..23	Checksum			

5.4.5.3 Host Network Controller Driver Status Change AEN

This AEN indicates a change of the Host Network Controller Driver Status. Table 117 illustrates the packet format of the AEN.

Table 117 – Host Network Controller Driver Status Change AEN packet format

	Bits			
Bytes	**31..24**	**23..16**	**15..08**	**07..00**
00..15	AEN Header			
16..19	Reserved			AEN Type = `0x02`
20..23	Host Network Controller Driver Status			
24..27	Checksum			

Table 118 shows the format of the Host Network Controller Driver Status field.

Table 118 – Host Network Controller Driver Status format

Bit position	Name	Description
0	Host Network Controller Driver Status	`0b` = The Network Controller driver for the host external network interface associated with this channel is not operational (not running). `1b` = The Network Controller driver for the host external network interface associated with this channel is being reported as operational (running).
1..31	Reserved	Reserved

5.5 Packet-based and op-code timing

Table 119 presents the timing specifications for a variety of packet-to-electrical-buffer interactions, inter-packet timings, and op-code processing requirements. The following timing parameters shall apply to NC-SI over RBT binding defined in this specification.

STANDARDSISO.COM : Click to view the full PDF of ISO/IEC 24079:2024

© ISO/IEC 2024 – All rights reserved

Table 119 – NC-SI packet-based and op-code timing parameters

Name	Symbol	Value	Description
Package Deselect to Hi-Z Interval	T1	200 µs, max	Maximum time interval from when a Network Controller completes transmitting the response to a Deselect Package command to when the Network Controller outputs are in the high-impedance state Measured from the rising edge of the first clock that follows the last bit of the packet to when the output is in the high-impedance state as clause 5.6 defines
Package Output to Data	T2	2 clocks, min	Minimum time interval after powering up the output drivers before a Network Controller starts transmitting a packet through the NC-SI interface Measured from the rising edge of the first clock of the packet
Network Controller Power Up Ready Interval	T4	2 s, max	Time interval from when the NC-SI on a Network Controller is powered up to when the Network Controller is able to respond to commands over the NC-SI Measured from when V_{ref} becomes available
Normal Execution Interval	T5	50 ms, max	Maximum time interval from when a controller receives a command to when it delivers a response to that command, unless otherwise specified Measured from the rising edge of the first clock following the last bit of the command packet to the rising edge of the clock for the first bit of the response packet
Asynchronous Reset Interval	T6	2 s, max	Interval during which a controller is allowed to not recognize or respond to commands due to an Asynchronous Reset event For a Management Controller, this means that a Network Controller could become unresponsive for up to T6 seconds if an Asynchronous Reset event occurs. This is not an error condition. The Management Controller retry behavior should be designed to accommodate this possibility.
Synchronous Reset Interval	T7	2 s, max	Interval during which a controller may not recognize or respond to requests due to a Synchronous Reset event Measured from the rising edge of the first clock following the last bit of the Reset Channel response packet
Token Timeout	T8	32,000 REF_CLK min	Number of REF_CLKs before timing out while waiting for a TOKEN to be received
Op-Code Processing	T9	32 REF_CLK max	Number of REF_CLKs after receiving an op-code on ARB_IN to decode the op-code and generate the next op-code on ARB_OUT Measured from the falling edge of the last bit of the op-code received on ARB_IN to the rising edge of the next op-code on ARB_OUT
Op-Code Bypass Delay	T10	32 REF_CLK max	Number of REF_CLK delays between a bit received on ARB_IN and the corresponding bit passed on to ARB_OUT while in Bypass Mode Measured from the falling edge of the last bit of the op-code received on ARB_IN to the rising edge of the next op-code on ARB_OUT
TOKEN to RXD	T11	T2 min, 32 REF_CLK max	Number of REF_CLKs after receiving TOKEN to when packet data is driven onto the RXD lines Measured from the falling edge of the last bit of the op-code received on ARB_IN to the rising edge of the next op-code on ARB_OUT
Max XOFF Renewal Interval	T12	50,331,648 REF_CLK max	Maximum time period (3 XOFF Frame timer cycles) during which a channel within a package is allowed to request and renew a single XOFF condition after requesting the initial XOFF
IPG to TOKEN Op-code Overlap	T13	6 REF_CLK max	Maximum number of REF_CLKs that the beginning of TOKEN transmission can precede the end of the Inter Packet Gap. For more information, see 5.3.3.8.

NOTE If hardware arbitration is in effect, the hardware arbitration output buffer enable/disable timing specifications take precedence.

STANDARDSISO.COM : Click to view the full PDF of ISO/IEC 24079:2024

© ISO/IEC 2024 – All rights reserved

5.6 RBT Electrical specification

5.6.1 Topologies

The electrical specification defines the NC-SI electrical characteristics for one management processor and one to four Network Controller packages in a bussed "multi-drop" arrangement. The actual number of devices that can be supported may differ based on the trace characteristics and routing used to interconnect devices in an implementation.

Figure 16 shows an example topology.

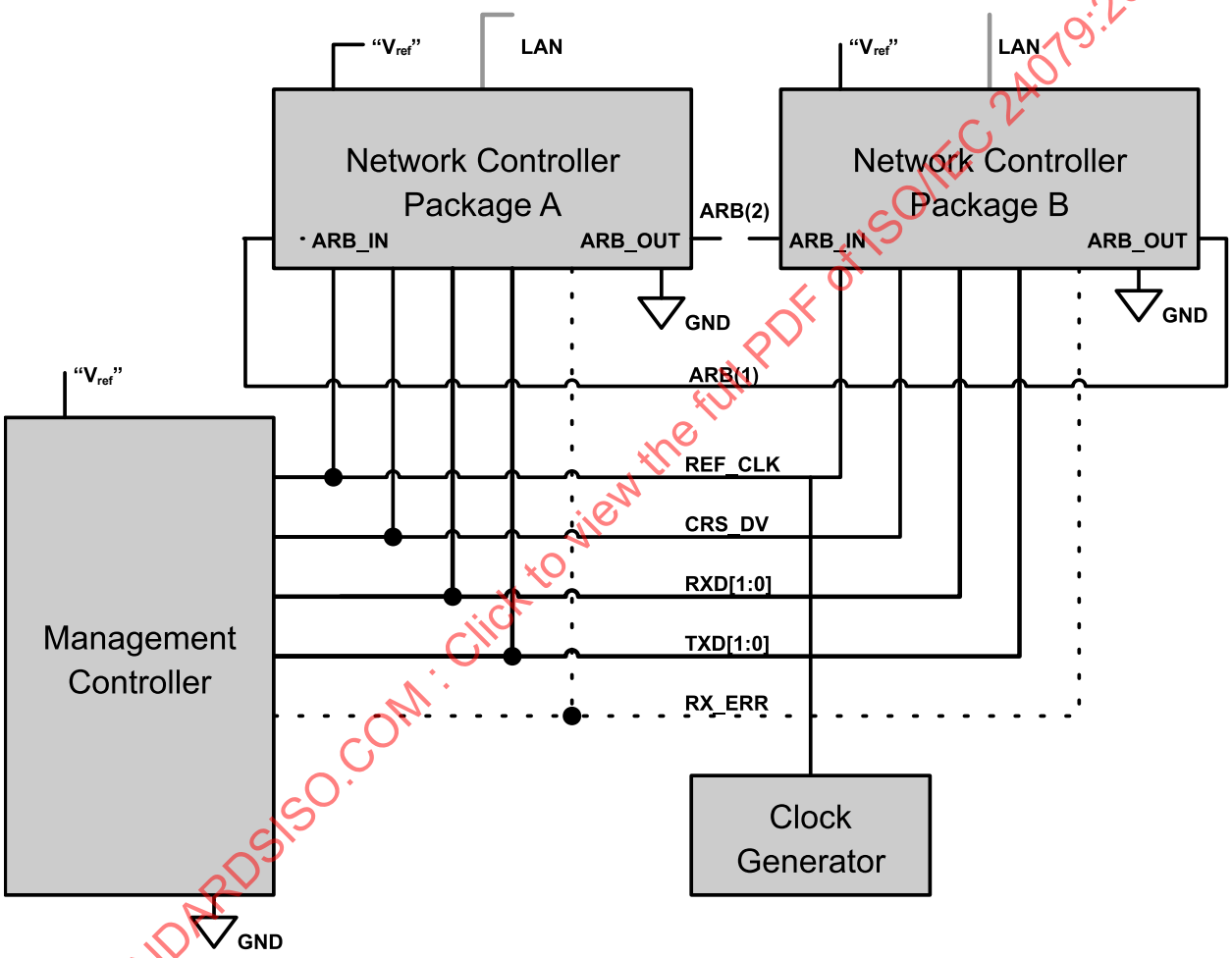

Figure 16 – Example NC-SI signal interconnect topology

STANDARDSISO.COM : Click to view the full PDF of ISO/IEC 24079:2024

5.6.2 Electrical and signal characteristics and requirements

5.6.2.1 Companion specifications

Implementations of the physical interface and signaling for the NC-SI shall meet the specifications in RMII and IEEE 802.3, except where those requirements differ or are extended with specifications provided in this document, in which case the specifications in this document shall take precedence.

© ISO/IEC 2024 – All rights reserved

5.6.2.2 Full-duplex operation

NC-SI RBT is specified only for full-duplex operation. Half-duplex operation is not covered by this specification.

5.6.2.3 Signals

Table 120 lists the signals that make up the NC-SI physical interface.

Unless otherwise specified, the high level of an NC-SI signal corresponds to its asserted state, and the low level represents the de-asserted state. For data bits, the high level represents a binary '1' and the low level a binary '0.'

Table 120 – Physical NC-SI signals

Signal Name	Direction (with respect to the Network Controller)	Direction (with respect to the Management Controller MAC)	Use	Mandatory or Optional
REF_CLK [a]	Input	Input	Clock reference for receive, transmit, and control interface	M
CRS_DV [b]	Output	Input	Carrier Sense/Receive Data Valid	M
RXD[1:0]	Output	Input	Receive data	M
TX_EN	Input	Output	Transmit enable	M
TXD[1:0]	Input	Output	Transmit data	M
RX_ER	Output	Input	Receive error	O
ARB_IN	Input [c]	N/A	Network Controller hardware arbitration Input	O [c]
ARB_OUT	Output [c]	N/A	Network Controller hardware arbitration Output	O [c]

[a] A device can provide an additional option to allow it to be configured as the source of REF_CLK, in which case the device is not required to provide a separate REF_CLK input line, but it can use REF_CLK input pin as an output. The selected configuration shall be in effect at NC-SI power up and remain in effect while the NC-SI is powered up.

[b] In the *RMII Specification*, the MII Carrier Sense signal, CRS, was combined with RX_DV to form the CRS_DV signal. When the NC-SI is using its specified full-duplex operation, the CRS aspect of the signal is not required; therefore, the signal shall provide only the functionality of RX_DV as defined in IEEE 802.3. (This is equivalent to the CRS_DV signal states in *RMII Specification* when a carrier is constantly present.) The Carrier Sense aspect of the CRS_DV signal is not typically applicable to the NC-SI because it does not typically detect an actual carrier (unlike an actual PHY). However, the Network Controller should emulate a carrier-present status on CRS_DV per IEEE 802.3 in order to support Management Controller MACs that may require a carrier-present status for operation.

[c] If hardware arbitration is implemented, the Network Controller package shall provide both ARB_IN and ARB_OUT connections. In some implementations, ARB_IN may be required to be tied to a logic high or low level if it is not used.

STANDARDSISO.COM : Click to view the full PDF of ISO/IEC 24079:2024

5.6.2.4 High-impedance control

Shared NC-SI operation requires Network Controller devices to be able to set their NC-SI outputs (RXD[1:0], CRS_DV, and, if implemented, RX_ER) into a high-impedance state either upon receipt of a command received through NC-SI, or, if hardware-based arbitration is in effect, as a result of hardware-based arbitration. A pull-down resistor should be provided on high impedance lines in a way that will keep the C_{load} value so that the line won't float.

Network Controller packages shall leave their NC-SI outputs in the high-impedance state on interface power up and shall not drive their NC-SI outputs until selected. For additional information about Network Controller packages, see 5.4.4.5.

© ISO/IEC 2024 – All rights reserved

Unless otherwise specified, for NC-SI output signals in this specification, the high-impedance state is defined as the state in which the signal leakage meets the I_z specification provided in 5.6.2.5.

5.6.2.5 DC characteristics

This clause defines the DC characteristics of the NC-SI physical interface.

5.6.2.5.1 Signal levels

CMOS 3.3 V signal levels are used for this specification.

The following characteristics apply to DC signals:

- Unless otherwise specified, DC signal levels and V_{ref} are measured relative to Ground (GND) at the respective device providing the interface, as Figure 17 shows.
- Input specifications refer to the signals that a device shall accept for its input signals, as measured at the device.
- Output specifications refer to signal specifications that a device shall emit for its output signals, as measured at the device.

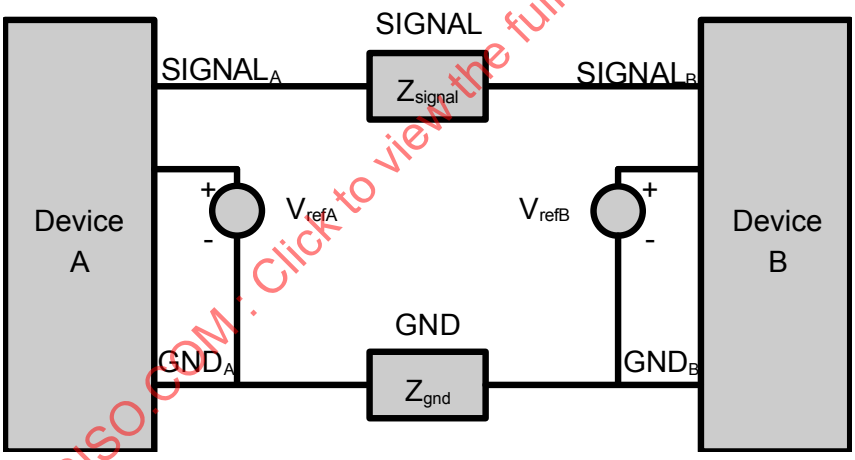

Figure 17 – DC measurements

Table 121 provides DC specifications.

Table 121 – DC specifications

Parameter	Symbol	Conditions	Minimum	Typical	Maximum	Units
IO reference voltage	V_{ref} [a]		3.0	3.3	3.6	V
Signal voltage range	V_{abs}		−0.300		3.765	V
Input low voltage	V_{il}				0.8	V
Input high voltage	V_{ih}		2.0			V
Input high current	I_{ih}	$V_{in} = V_{ref} = V_{ref,max}$	0		200	µA
Input low current	I_{il}	$V_{in} = 0$ V	−20		0	µA

STANDARDSISO.COM : Click to view the full PDF of ISO/IEC 24079:2024

© ISO/IEC 2024 – All rights reserved

Parameter	Symbol	Conditions	Minimum	Typical	Maximum	Units
Output low voltage	V_{ol}	I_{ol} = 4 mA, V_{ref} = min	0		400	mV
Output high voltage	V_{oh}	I_{oh} = −4 mA, V_{ref} = min	2.4		V_{ref}	V
Clock midpoint reference level	V_{ckm}				1.4	V
Leakage current for output signals in high-impedance state	I_z	$0 \leq V_{in} \leq V_{ref}$ at $V_{ref} = V_{ref,max}$	−20		20	µA

[a] V_{ref} = Bus high reference level (typically the NC-SI logic supply voltage). This parameter replaces the term *supply voltage* because actual devices may have internal mechanisms that determine the operating reference for the NC-SI that are different from the devices' overall power supply inputs.

V_{ref} is a reference point that is used for measuring parameters (such as overshoot and undershoot) and for determining limits on signal levels that are generated by a device. In order to facilitate system implementations, a device shall provide a mechanism (for example, a power supply pin, internal programmable reference, or reference level pin) to allow V_{ref} to be set to within 20 mV of any point in the specified V_{ref} range. This approach enables a system integrator to establish an interoperable V_{ref} level for devices on the NC-SI.

STANDARDSISO.COM : Click to view the full PDF of ISO/IEC 24079:2024

5.6.2.6 AC characteristics

This clause defines the AC characteristics of the NC-SI physical interface.

5.6.2.6.1 Rise and fall time measurement

Rise and fall time are measured between points that cross 10% and 90% of V_{ref} (see Table 121). The middle points (50% of V_{ref}) are marked as V_{ckm} and V_m for clock and data, respectively.

5.6.2.6.2 REF_CLK measuring points

In Figure 18, REF_CLK duty cycle measurements are made from V_{ckm} to V_{ckm}. Clock skew T_{skew} is measured from V_{ckm} to V_{ckm} of two NC-SI devices and represents maximum clock skew between any two devices in the system.

5.6.2.6.3 Data, control, and status signal measuring points

In Figure 18, all timing measurements are made between V_{ckm} and V_m. T_{co} is measured with a capacitive load between 10 pF and 50 pF. Propagation delay T_{prop} is measured from V_m on the transmitter to V_m on the receiver.

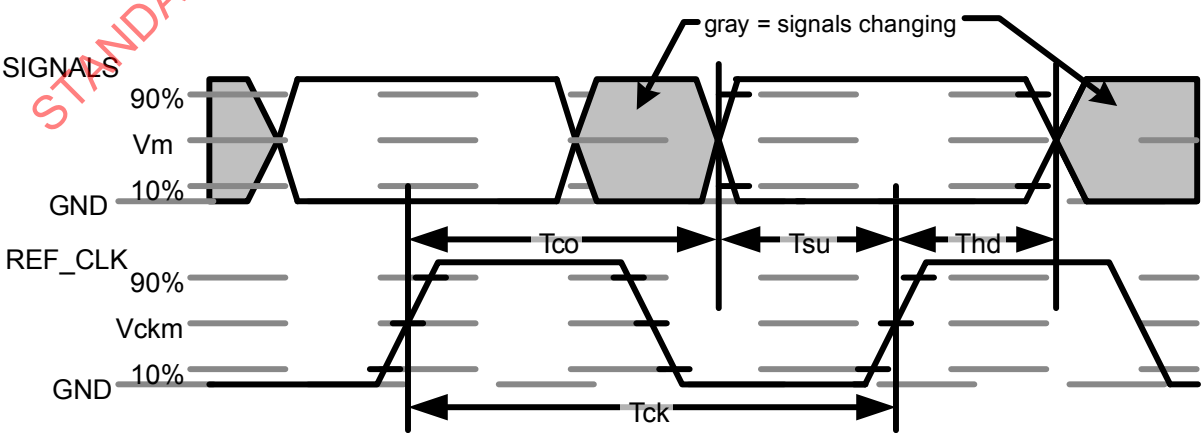

Figure 18 – AC measurements

© ISO/IEC 2024 – All rights reserved