SAE Aerospace
An SAE International Group

AEROSPACE STANDARD

SAE AS22759 | REV. B

Issued 2001-07
Revised 2011-09

Superseding AS22759A

Wire, Electrical, Fluoropolymer-Insulated, Copper or Copper Alloy

RATIONALE

To incorporate AS22759A-A1 in AS22759A per Aerospace Council directive.

1. SCOPE

AS22759 specification covers fluoropolymer-insulated single conductor electrical wires made with tin-coated, silver-coated, or nickel-coated conductors of copper or copper alloy as specified in the applicable detail specification. The fluoropolymer insulation may be polytetrafluoroethylene (PTFE), fluorinated ethylene propylene (FEP), polyvinylidene fluoride (PVF_2), ethylene-tetrafluoroethylene copolymer (ETFE), or other fluoropolymer resin. The fluoropolymer may be used alone or in combination with other insulation materials.

1.1 Part Numbers

Unless otherwise specified part numbers are coded as in the following example (see 3.5.5 and 3.5.6):

M22759/1 -22 -9

M22759/1: Applicable detail specification designator (see 3.1)
-22: Wire Size: (see 3.1)
-9: Insulation color (see 3.5.5)

1.2 Temperature Ratings of Finished Wires

The maximum conductor temperatures of the finished wires for continuous use are specified in the detail specifications.

2. APPLICABLE DOCUMENTS

The following publications form a part of this document to the extent specified herein. The latest issue of SAE publications shall apply. The applicable issue of other publications shall be the issue in effect on the date of the purchase order. In the event of conflict between the text of this document and references cited herein, the text of this document takes precedence. Nothing in this document, however, supersedes applicable laws and regulations unless a specific exemption has been obtained.

2.1 SAE Publications

Available from SAE International, 400 Commonwealth Drive, Warrendale, PA 15096-0001, Tel: 877-606-7323 (inside USA and Canada) or 724-776-4970 (outside USA), www.sae.org.

AMS1424 Deicing/Anti-Icing Fluid, Aircraft, SAE Type I

AS1241 Fire Resistant Phosphate Ester Hydraulic Fluid for Aircraft

SAENORM.COM : Click to view the full PDF of as22759b

SAE Technical Standards Board Rules provide that: "This report is published by SAE to advance the state of technical and engineering sciences. The use of this report is entirely voluntary, and its applicability and suitability for any particular use, including any patent infringement arising therefrom, is the sole responsibility of the user."

SAE reviews each technical report at least every five years at which time it may be reaffirmed, revised, or cancelled. SAE invites your written comments and suggestions.

Copyright © 2011 SAE International

All rights reserved. No part of this publication may be reproduced, stored in a retrieval system or transmitted, in any form or by any means, electronic, mechanical, photocopying, recording, or otherwise, without the prior written permission of SAE.

TO PLACE A DOCUMENT ORDER: Tel: 877-606-7323 (inside USA and Canada)
Tel: 724-776-4970 (outside USA)
Fax: 724-776-0790
Email: CustomerService@sae.org

SAE WEB ADDRESS: http://www.sae.org

SAE values your input. To provide feedback on this Technical Report, please visit http://www.sae.org/technical/standards/AS22759B

AS4373 Test Methods for Insulated Electric Wire

AS4461 Assembly and Soldering Criteria for High Quality/High Reliability Soldered Wire and Cable Termination in Aerospace Vehicles

AS5457 Aerospace Standard for Hand-Held Wire Stripper Tools

2.1.1 AS22759 Detail Specifications

AS22759/1 Wire, Electrical, Fluoropolymer-Insulated, PTFE and PTFE-Coated Glass, Silver-Coated Copper Conductor, 600-Volt

AS22759/2 Wire, Electrical, Fluoropolymer-Insulated, PTFE, and PTFE-Coated-Glass, Nickel-Coated Copper Conductor, 600-Volt

AS22759/3 Wire, Electrical, Fluoropolymer-Insulated, TFE-Glass-TFE, Medium Weight, Nickel-Coated Copper Conductor, 600-Volt

AS22759/4 Wire, Electrical, Fluoropolymer-Insulated, TFE-Glass-FEP, Medium Weight, Silver-Coated Copper Conductor, 600-Volt

AS22759/5 Wire, Electrical, Fluoropolymer-Insulated, Abrasion Resistant Extruded PTFE, Silver-Coated Copper Conductor, 600-Volt

AS22759/6 Wire, Electrical, Fluoropolymer-Insulated, Abrasion Resistant Extruded PTFE, Nickel-Coated Copper Conductor, 600-Volt

AS22759/7 Wire, Electrical, Fluoropolymer-Insulated, Abrasion Resistant Extruded PTFE, Medium Weight, Silver-Coated Copper Conductor, 600-Volt

AS22759/8 Wire, Electrical, Fluoropolymer-Insulated, Abrasion Resistant Extruded PTFE, Medium Weight, Nickel-Coated Copper Conductor, 600-Volt

AS22759/9 Wire, Electrical, Fluoropolymer-Insulated, Extruded TFE, Silver-Coated Copper Conductor, 1,000-Volt

AS22759/10 Wire, Electrical, Fluoropolymer-Insulated, Extruded TFE, Nickel-Coated Copper Conductor, 1,000-Volt

AS22759/11 Wire, Electrical, Fluoropolymer-Insulated, Extruded TFE, Silver-Coated Copper Conductor, 600-Volt

AS22759/12 Wire, Electrical, Fluoropolymer-Insulated, Extruded TFE, Nickel-Coated Copper Conductor, 600-Volt

AS22759/13 Wire, Electrical, Fluoropolymer-Insulated, FEP-PVF_2, Medium Weight, Tin-Coated Copper Conductor, 600-Volt

AS22759/14 Wire, Electrical, Fluoropolymer-Insulated, FEP-PVF_2, Light Weight, Tin-Coated Copper Conductor, 600-Volt

AS22759/15 Wire, Electrical, Fluoropolymer-Insulated, FEP-PVF_2, Light Weight, Silver-Coated High Strength Copper Alloy Conductor, 600-Volt

AS22759/16 Wire, Electrical, Fluoropolymer-Insulated, Extruded ETFE, Medium Weight, Tin-Coated Copper Conductor, 600-Volt, 150°C

AS22759/17 Wire, Electrical, Fluoropolymer-Insulated, Extruded ETFE, Medium Weight, Silver-Coated High Strength Copper Alloy Conductor, 600-Volt, 150°C

AS22759/18 Wire, Electrical, Fluoropolymer-Insulated, Extruded ETFE, Light Weight, Tin-Coated Copper Conductor, 600-Volt, 150°C

SAENORM.COM : Click to view the full PDF of as22759b

AS22759/19 Wire, Electrical, Fluoropolymer-Insulated, Extruded ETFE, Light Weight, Silver-Coated High Strength Copper Alloy Conductor, 600-Volt, 150°C

AS22759/20 Wire, Electrical, Fluoropolymer-Insulated, Extruded TFE, Silver-Coated High Strength Copper Alloy Conductor, 1,000-Volt

AS22759/21 Wire, Electrical, Fluoropolymer-Insulated, Extruded TFE, Nickel-Coated High Strength Copper Alloy Conductor, 1,000-Volt

AS22759/22 Wire, Electrical, Fluoropolymer-Insulated, Extruded TFE, Silver-Coated High Strength Copper Alloy Conductor, 600-Volt

AS22759/23 Wire, Electrical, Fluoropolymer-Insulated, Extruded TFE, Nickel-Coated High Strength Copper Alloy Conductor, 600-Volt

AS22759/28 Wire, Electrical, Fluoropolymer-Insulated, Extruded TFE, Polyimide Coated, Silver-Coated Copper Conductor, 600-Volt

AS22759/29 Wire, Electrical, Fluoropolymer-Insulated, Extruded TFE, Polyimide Coated, Nickel-Coated Copper Conductor, 600-Volt

AS22759/30 Wire, Electrical, Fluoropolymer-Insulated, Extruded TFE, Polyimide Coated, Silver-Coated High Strength Copper Alloy Conductor, 600-Volt

AS22759/31 Wire, Electrical, Fluoropolymer-Insulated, Extruded TFE, Polyimide Coated, Nickel-Coated High Strength Copper Alloy Conductor, 600-Volt

AS22759/32 Wire, Electrical, Fluoropolymer-Insulated, Cross-linked Modified ETFE, Lightweight, Tin-Coated Copper, 150°C, 600-Volt

AS22759/33 Wire, Electrical, Fluoropolymer-Insulated, Cross-linked Modified ETFE, Lightweight, Silver-Coated High Strength Copper Alloy, 150°C, 600-Volt

AS22759/34 Wire, Electrical, Fluoropolymer-Insulated, Cross-linked Modified ETFE, Normal Weight, Tin-Coated Copper, 150°C, 600-Volt

AS22759/35 Wire, Electrical, Fluoropolymer-Insulated, Cross-linked Modified ETFE, Normal Weight, Silver-Coated High Strength Copper Alloy, 150°C, 600-Volt

AS22759/41 Wire, Electrical, Fluoropolymer-Insulated, Cross-linked Modified ETFE, Normal Weight, Nickel-Coated Copper, 200°C, 600-Volt

AS22759/42 Wire, Electrical, Fluoropolymer-Insulated, Cross-linked Modified ETFE, Normal Weight, Nickel-Coated High Strength Copper Alloy, 200°C, 600-Volt

AS22759/43 Wire, Electrical, Fluoropolymer-Insulated, Cross-linked Modified ETFE, Normal Weight, Silver-Coated Copper, 200°C, 600-Volt

AS22759/44 Wire, Electrical, Fluoropolymer-Insulated, Cross-linked Modified ETFE, Light Weight, Silver-Coated Copper, 200°C, 600-Volt

AS22759/45 Wire, Electrical, Fluoropolymer-Insulated, Cross-linked Modified ETFE, Light Weight, Nickel-Coated Copper, 200°C, 600-Volt

AS22759/46 Wire, Electrical, Fluoropolymer-Insulated, Cross-linked Modified ETFE, Light Weight, Nickel-Coated High Strength Copper Alloy, 200°C, 600-Volt

SAENORM.COM : Click to view the full PDF of as22759b

AS22759/80 Wire, Electrical, Polytetrafluoroethylene/Polyimide Insulated, Light Weight, Tin Coated, Copper Conductor, 150°C, 600 Volts

AS22759/81 Wire, Electrical, Polytetrafluoroethylene/Polyimide Insulated, Light Weight, Silver Coated, High Strength or Ultra High Strength Copper Alloy, 200°C, 600 Volts

AS22759/82 Wire, Electrical, Polytetrafluoroethylene/Polyimide Insulated, Light Weight, Nickel Coated, High Strength or Ultra High Strength Copper Alloy, 260°C, 600 Volts

AS22759/83 Wire, Electrical, Polytetrafluoroethylene/Polyimide Insulated, Normal Weight, Silver Coated, Copper Conductor, 200°C, 600 Volts

AS22759/84 Wire, Electrical, Polytetrafluoroethylene/Polyimide Insulated, Normal Weight, Nickel Coated, Copper Conductor, 260°C, 600 Volts

AS22759/85 Wire, Electrical, Polytetrafluoroethylene/Polyimide Insulated, Normal Weight, Tin Coated, Copper Conductor, 150°C, 600 Volts

AS22759/86 Wire, Electrical, Polytetrafluoroethylene/Polyimide Insulated, Normal Weight, Silver Coated, Copper Conductor, 200°C, 600 Volts

AS22759/87 Wire, Electrical, Polytetrafluoroethylene/Polyimide Insulated, Normal Weight, Nickel Coated, Copper Conductor, 260°C, 600 Volts

AS22759/88 Wire, Electrical, Polytetrafluoroethylene/Polyimide Insulated, Normal Weight, Tin Coated, Copper Conductor, 150°C, 600 Volts

AS22759/89 Wire, Electrical, Polytetrafluoroethylene/Polyimide Insulated, Normal Weight, Silver Coated, High Strength or Ultra High Strength Copper Alloy, 200°C, 600 Volts

AS22759/90 Wire, Electrical, Polytetrafluoroethylene/Polyimide Insulated, Normal Weight, Nickel Coated, High Strength or Ultra High Strength Copper Alloy, 260°C, 600 Volts

AS22759/91 Wire, Electrical, Polytetrafluoroethylene/Polyimide Insulated, Light Weight, Silver Coated, Copper Conductor, 200°C, 600 Volts

AS22759/92 Wire, Electrical, Polytetrafluoroethylene/Polyimide Insulated, Light Weight, Nickel Coated, Copper Conductor, 260°C, 600 Volts

AS50881 Wiring, Aerospace Vehicle

AS9003 Inspection and Test Quality System

SAENORM.COM : Click to view the full PDF of as22759b

2.2 ANSI Publications

Available from American National Standards Institute, 25 West 43rd Street, New York, NY 10036-8002, Tel: 212-642-4900, www.ansi.org.

ANSI-Z540.1 Laboratories, Calibration and Measuring and Test Equipment

2.3 ASQ Publications

Available from American Society for Quality, 600 North Plankinton Avenue, Milwaukee, WI 53203, Tel: 800-248-1946 (North America) or +1-414-272-8575 (International), www.asq.org.

ASQC-Z1.4 Sampling Procedures and Tables for Inspection by Attributes

ASQC-A8402 Quality Management and Quality Assurance - Vocabulary

2.4 ASTM Publications

Available from ASTM International, 100 Barr Harbor Drive, West Conshohocken, PA 19428-2959, Tel: 610-832-9585, www.astm.org.

ASTM B 286 Copper Conductors for Use in Hookup Wire for Electronic Equipment

ASTM D 149 Standard Test Method for Dielectric Breakdown Voltage and Dielectric Strength of Solid Electrical Insulating Materials at Commercial Power Frequencies

ASTM D 471 Standard Test Method for Rubber Property

ASTM D 491 Standard Test Method for Determining Temperatures and Heats of Transitions of Fluoropolymers by Differential Scanning Calorimetry

ASTM D 770 Standard Specification for Isopropyl Alcohol

ASTM D 792 Standard Methods of Test for Specific Gravity and Density of Plastics by Displacement

ASTM D 882 Standard Test Methods for Tensile Properties of Thin Plastic Sheeting

ASTM D 1153 Methyl Isobutyl Ketone (for Use in Organic Coatings)

ASTM D 1655 Standard Specification for Aviation Turbine Fuels

ASTM D 3032 Hook Up Wire Insulation Standard Test Method For

ASTM D 4591 Temperature and Heats Determining of Transition of Fluoropolymers by Differential Scanning Calorimetry

ASTM D 4814 Gasoline, Automotive, Combat

ASTM D 4895 Standard Specification for Polytetrafluoroethylene (PTFE) Resin Produced From Dispersion

2.5 IPC-Association Connecting Electronics Industries Publications

Available from IPC, 3000 Lakeside Drive, Bannockburn, IL 60015, Tel: 847-597-2862, www.ipc.org.

J-STD-002 Component Leads, Terminations, Lugs, wires, Solderability Tests For

2.6 U.S. Government Publications

Available from the Document Automation and Production Service (DAPS), Building 4/D, 700 Robbins Avenue, Philadelphia, PA 19111-5094, Tel: 215-697-6257, http://assist.daps.dla.mil/quicksearch/.

MIL-STD-104 Limits for Electrical Insulation Color

MIL-STD-129 Marking for Shipment and Storage

MIL-STD-202 Electronic and Electrical Components Parts

MIL-STD-681 Identification Coding and Application of Hookup and Lead Wire

MIL-STD-2223 Test Methods for Insulated Electric Wire

MIL-PRF-5606 Hydraulic Fluid, Petroleum Base; Aircraft, Missile and Ordnance

MIL-DTL-5624 Turbine Fuel, Aviation, Grades JP-4 and JP-5

SAENORM.COM : Click to view the full PDF of as22759b

MIL-DTL-12000	Cable, Cord, and Wire, Electric; Packaging of
MIL-PRF-23699	Lubricating Oil, Aircraft Turbine Engine, Synthetic Base
MIL-C-43616	Cleaning Compound, Aircraft Surface
MIL-PRF-87252	Coolant Fluid, Hydrolytically Stable, Dielectric
MIL-PRF-7808	Lubricating Oil, Aircraft, Turbine Engine, Synthetic Base
MIL-A-8243	Anti-icing and Deicing Defrosting Fluid
MIL-DTL-83133	Turbine Fuel, Aviation, Kerosene Types, NATO F-34 (JP-8) and NATO F-35
MIL-PRF-87937	Cleaning Compound, Aerospace Equipment
MIL-DTL-29606	Wire, Electrical, Stranded, Uninsulated Copper, Copper Alloy, or Aluminum, or Thermocouple Extension, General Specification For
SD6	Provisions Governing Qualification
H4/H8	Catalog of Commercial and Government Entities (CAGE) (Battle Creek Customer Contact Center, Defense Logistics Information Service, 74 Washington Avenue N., Battle Creek, MI 49017-3084)

3. REQUIREMENTS

3.1 Acquisition Specification and Detail Specifications

The requirements for the individual wires under this acquisition specification shall be as specified herein and in accordance with the applicable detail specification (see 2.1.1). Unless otherwise specified below, any conflict between the requirements of this specification and those of the detail specification, the requirements of the detail specification shall govern. If the acquisition specification refer to a detail specification for a required value and that value is not specified in the detail specification, the acquisition specification requirement does not apply to that detail specification. Unless otherwise specified by contract or purchase order, product purchased to this specification shall be supplied to the latest revision in effect at issuance of the contract or purchase order (see 6.3).

3.1.1 All detail specification provisions for resistance to tape abrasion are not required.

3.1.2 All detail specification provisions for acid resistance are not required.

3.2 Qualification (see 4.4)

The wires furnished under this specification shall be products, which are authorized by the qualifying activity for listing on the applicable qualified products list at the time set for opening of contract bids or purchase orders. Qualification requirements are in accordance with Table 4 and the detail specification.

3.2.1 Conformity to Qualified Sample

Except for changes approved by the contract, it is understood that wire supplied under contract shall be the same material formulations, material sources, and manufacturing processes as approved by the qualifying activity. Any unapproved changes made after the qualification approval date, unless accepted by the qualifying activity, may constitute cause for rejection.

SAENORM.COM : Click to view the full PDF of as22759b

3.3 Materials

Wire materials shall be as specified herein or as specified in the detail specification.

3.3.1 Conductor Material (see 4.5.1.1)

All conductors shall meet the material requirements of MIL-DTL-29606.

3.3.2 Insulation Material (see 4.5.1.2)

All fluoropolymers used in any type of insulation shall be as specified herein and in the detail specification and shall contain no additives except those required as wetting agents in suspensoids, pigmentation for colors, and lubricants used in extrusion. Fillers shall be added only when required by the applicable detail specification. The use of reclaimed or recycled insulation materials is not prohibited, but if used, the recycled materials shall not have been degraded, are free of contaminants, and are identical with materials in performance. The physical properties of the fluoropolymer insulating materials shall be as specified in Table 1.

3.3.2.1 Polytetrafluoroethylene (PTFE) Resin Material

Unless otherwise specified in the detail specification, the PTFE resin shall conform to ASTM D 4895.

SAENORM.COM : Click to view the full PDF of as22759b

TABLE 1 - PHYSICAL PROPERTIES OF INSULATION COMPONENTS

Characteristics	Unsupported PTFE Tapes			Extruded Insulation or Jackets				
	Skived	Cast	Extruded Unsintered	Polytetra-fluoro-ethylene (PTFE)	Fluorinated Ethylene Propylene (FEP)	Ethylene Tetrafluoro-ethylene (ETFE)	Polyvinyl-idene Fluoride (PVF2)	Abrasion Resistant (Mineral Filled) Polytetrafluoro-ethylene (PTFE)
Tensile Strength (min average lb/in^2)	4000	3000	1300	Size 28-20 4500 18-12 4000 10-8 3500	2000	5000	5000	Size 24-20 4000 18-4 3500
Longitudinal elongation (min average percent)	300	300	50	Size 28-14 250 12-8 200	150	150	250	Size 24-8 200 6-4 150
Circumferential elongation (min average percent) 1/				Size 28-16 200 14-12 150 10-8 100				Size 24-16 100% 14-12 75% 10-4 50%
Dielectric Strength (minimum average volts/mil) 0 to 3.5 mils 3.6 to 5.5 mils 5.6 and larger mils	 2700 2200 1500	 3200 2700	 700 700					
Specific gravity	2.5 min 2.21 max	2.15 min 2.21 max	1.5 min					

1/ The circumferential elongation test is not applicable for other materials in Table 1.

SAENORM.COM : Click to view the full PDF of as22759b

3.3.2.2 PTFE Coated Fibrous Glass Yarns Material

Unless otherwise specified in the detail specification, all fibrous glass yarns used in braiding shall be coated with PTFE resin to the extent of not less than 15% by weight of the coated yarn. In addition, after each braid application, the braid shall be coated with PTFE. This coating shall be a PTFE finisher, PTFE extrusion, or PTFE unsupported tape.

3.3.2.3 PTFE Coated Fibrous Glass Tapes Material

Unless otherwise specified in the detail specification, all fibrous glass tapes used in insulation shall contain not less than 50% of PTFE by weight of the coated tape.

3.3.2.4 Fluoropolymer/Polyimide/Fluoropolymer Tapes Material

Unless otherwise specified in the detail specification, fluoropolymer/polyimide/fluoropolymer tapes shall be as specified herein.

3.4 Finished Wire Construction (see 4.5)

3.4.1 Conductor Construction (see 4.5)

All conductors shall be constructed in accordance with MIL-DTL-29606.

3.4.1.1 Conductor Elongation and Tensile Strength of Finished Wire (see 4.5.12)

3.4.1.1.1 Conductor Soft or Annealed Copper (see 4.5.12.1)

The individual strands removed from finished wires with soft or annealed copper conductors, wire sizes 20 and larger, or the whole soft or annealed copper conductor removed from finished wire, sizes 22 and smaller, shall have the following minimum elongation:

Sizes 24 and smaller - 6% (minimum)

Sizes 22 and larger - 10% (minimum)

There shall be no tensile strength requirements for soft or annealed copper conductors.

3.4.1.1.2 Conductor High Strength Alloy Copper (see 4.5.12.2)

Unless otherwise specified in the detail specification, the whole conductor removed from finished wires with high strength and ultra high strength alloy copper conductors shall exhibit elongation of 6% minimum, and tensile breaking strength conforming to MIL-DTL-29606.

3.4.1.2 Conductor Stranding (see 4.5)

Conductor stranding shall be as specified in the detail specification.

3.4.1.3 Conductor Diameter (see 4.5.2)

The diameter of the conductor shall be as specified in the detail specification.

3.4.1.4 Conductor Resistance (see 4.5.11)

Conductor resistance shall be as specified in the detail specification.

SAENORM.COM : Click to view the full PDF of as22759b

3.4.2 Insulation Construction (see 4.5)

Insulation construction shall be as specified in the detail specification.

3.4.2.1 Insulation Tape Splices

Splices shall be permitted in the insulation tapes provided the performance characteristics of the finished wire are not affected. No splice in one layer of insulation tape shall be so positioned on the wire as to overlap any part of a splice in another layer of insulation tape. The measured maximum diameter of the finished wire at a splice in the insulation tape shall not exceed the measured diameter of the finished wire where no tape splice is present by more than five times the nominal thickness of the tape in which the splice occurs (seven times for single-tape insulations). Splices of the outer insulation tape shall not be longer than 1 inch and not more than one splice of the outer insulation tape shall occur in any 150 feet of the finished wire.

3.5 Finished Wire Design (see 4.5)

The finished wire shall be constructed as specified in the detail specification.

3.5.1 Primary Insulation Flaws (see 4.5.1.3)

Unless otherwise specified in the detail specification, one hundred percent of the wire, following application of the primary insulation, shall be subjected to the spark test, impulse dielectric test, or the high frequency spark test. This evaluation shall be performed before the application of any additional layers to the wire.

3.5.2 Insulation Stripping (4.5.4)

All insulation shall be readily removable by conventional wire stripping devices without damage to the conductor. Unless otherwise specified in the detail specification, the insulation shall be removed in accordance with the recommended tool in AS5457 and the conductor shall be found “acceptable” as defined by AS5457. There shall be no evidence of insulation on the conductor when viewed using normal or corrective vision, without magnification.

3.5.2.1 Insulation Strip Force (4.5.4.1)

For wire size 26 through 14, the strip force shall be in accordance with the detail specification.

3.5.3 Insulation Concentricity and Wall Thickness (see 4.5.13)

The concentricity shall be 70% unless otherwise specified. The concentricity requirement shall apply to both the primary insulation and the finished wire. The concentricity requirement shall not apply to tape-wrap constructions. When required in the detail specification, the minimum wall thickness shall be as specified in the detail specification.

3.5.4 Finished Wire Insulation Flaws (see 4.5.6)

One hundred percent of the finished wire shall pass either the impulse dielectric test or the high frequency spark test. This test shall be performed during the final winding of the wire on shipment spools or reels.

3.5.5 Insulation Color Marking (see 4.5)

The color of the finished wire shall be as indicated by the insulation color designator (see 1.1) of the wire part number. The first digit of the designator shall indicate the background insulation color and the succeeding digits, if any, shall indicate the colors of the stripes, bands, or tracers. The insulation color designator of the wire shall be listed in MIL-STD-681, System I (differentiation color coding for chassis wiring). The preferred color and any applicable restrictions on available colors are indicated in the individual detail specification. Unless otherwise specified in the detail specification, the color of the background insulation shall be in accordance with MIL-STD-104, Class 1. Alternate Munsell color limits for the background insulation may be used for laser marking when specified in the detail specification. The color of stripes, bands, or tracers shall be in accordance with MIL-STD-104, Class 1. The designation code for color marking of stripes or bands shall be in accordance with MIL-STD-681.

SAENORM.COM : Click to view the full PDF of as22759b

3.5.6 Insulation Identification Printed Marking (see 4.5)

Unless otherwise specified in the detail specification, the finished wire shall be identified by a printed marking applied to the outer surface of the wire. The printed identification shall be at intervals of 6 to 60 inches, as measured from the end of one complete marking to the beginning of the succeeding complete marking. The identification mark shall not be applied by hot stamp marking or other methods that significantly penetrate the insulation.

3.5.6.1 Part Number Marking (see 1.1)

The first marking on the wire shall be the part number.

3.5.6.1.1 Color Marking Code Exemption

The color code portion of the part number is not required in the printed marking but is required in all reference documentation. At the option of the wire supplier, the color code portion of the part number (see 1.1) may be included but, if included, it shall be included in its entirety, not in part.

3.5.6.2 Manufacturer Identification

The second marking on the wire shall be the manufacturer's identification in accordance with the manufacturer's Commercial and Government Entity (CAGE) listed in publication H4/H8.

3.5.6.3 Detail Specification Revision Letter

The third marking on the wire shall be the latest revision letter specified for the detail specification. If the detail specification has no revision letter, the revision letter is not required.

3.5.6.3.1 Supply of Latest Revision

Unless otherwise specified in the purchase order, the supplier has 12 months from the date of the revision of a specification sheet to supply product to that latest revision or 12 months from issuance of this document (revision A) for existing detail specifications dated prior to this document revision.

3.5.6.4 Wire Printed Marking Example

An example of how the marking appears on the wire is as follows (for color marking option see 3.5.6.1):

M22759/1-22 12814 REV A

3.5.6.5 Identification Marking Color

Unless otherwise specified in the detail specification, the printing shall be green in color in accordance with MIL-STD-104, Class 1, except that when the wire is any color against which green is difficult to distinguish, the printing shall be white. Identification printing shall be applied with the vertical axes of the printed characters lengthwise of the wire when the nominal diameter of the finished wire is 0.050 inches or smaller. The vertical axes of the printed characters may be either crosswise or lengthwise of the wire when the nominal diameter of the wire exceeds 0.050 inch. All printed characters shall be complete and legible.

3.5.6.6 Stripe Identification

The colored stripes or bands, if used, shall be in accordance with MIL-STD-681.

3.5.7 Insulation Circumferential Elongation for (extruded PTFE or abrasion resistant PTFE insulation) (see 4.5.1.2.3)

The circumferential elongation shall be in accordance with Table 1.

SAENORM.COM : Click to view the full PDF of as22759b

3.5.8 Insulation Resistance (see 4.5.7)

The insulation resistance shall be as specified in the detail specification.

3.5.9 Diameter (see 4.5.3)

The finished wire diameter shall be as specified in the detail specification.

3.5.10 Weight (see 4.5.5)

The finished wire weight shall be as specified in the detail specification.

3.5.11 Insulation State of Sinter (see 4.5.37)

Layers of insulations shall meet the state of sinter requirement as specified in the detail specification.

3.5.12 Workmanship (see 4.5)

All details of workmanship shall be in accordance with high grade aircraft wire manufacturing practice. The insulation shall be free of cracks, splits, irregularities, and imbedded foreign material.

3.6 Finished Wire Performance Requirements (see 4.5)

3.6.1 Marking Durability (see 4.5.9)

Identification of product printing (see 3.5.5 and 3.5.6), when applied to the outer surface of the finished wire, shall be capable of withstanding the durability test for the number of cycles and with the weight specified in the detail specification. This test shall not be required when the identification marking (see 3.5.5 and 3.5.6) is under a clear jacket, or on braided tracers.

3.6.2 Insulation Wrap (see 4.5.8)

3.6.2.1 Extruded Insulation ("wrap back test")

Wire insulation composed entirely of extruded material or polyimide-coated extruded material shall show no cracking of the insulation.

3.6.2.2 Tape or Braid Insulation (Mandrel Test)

Wire with tapes, braids, or both tapes and braids as components of the insulation shall show no insulation cracking or dielectric breakdown.

3.6.3 Insulation Blocking (see 4.5.10)

Adjacent turns or layers of the wire shall not stick to one another.

3.6.4 Conductor Strand Adhesion (see 4.5.30)

When required by the detail specification, the conductor shall contain the total number of strands specified in the detail specification. When 19-strand conductors (wire sizes 26 through 12) taken from finished wires are examined in accordance with 4.5.30, the total number of unbonded single strands plus the number of metallic bonded pairs and metallic bonded groups of strands in the specimen shall be not less than 13. For all other conductors (7 strands, etc.) the total count of unbonded single strands metallic bonded pairs of strands, and metallic bonded groups of strands shall not be less than 0.70 times the number of strands in the conductor.

SAENORM.COM : Click to view the full PDF of as22759b

3.6.5 Conductor Solderability (see 4.5.29)

Unless otherwise specified in the detail specification, conductors of finished wires that have tin coated or silver coated strands shall be tested for solderability. The requirement for acceptable solder coverage of the stranded conductor shall be as defined in J-STD-002. The test is not applicable to finished wires with nickel coated strands (see 6.1).

3.6.6 Insulation Shrinkage (see 4.5.14)

Insulation shrinkage shall not exceed that specified in the in the detail specification.

3.6.7 Insulation Low Temperature Resistance (see 4.5.16)

The insulation shall have no visible cracks or dielectric breakdown.

3.6.8 Insulation Thermal Shock (see 4.5.17)

The insulation shall not shrink or elongate greater than that specified in the in the detail specification. There shall be no flaring of the insulation layers.

3.6.9 Wicking (see 4.5.15)

The wire shall not exceed the weight gain or travel beyond dye length specified in the detail specification.

3.6.10 Life Cycle (see 4.5.19)

Unless otherwise specified in the in the detail specification, there shall be no change in color of the insulation. Change in marking color shall not be considered. There shall be no observed cracks or splits when subjected to the bend test and no dielectric breakdown of the insulation.

3.6.11 Fluid Immersion (see 4.5.24)

The finished wire shall not exceed the diameter specified in the in the detail specification by more than 5%. The wire shall exhibit no cracking or insulation dielectric breakdown.

3.6.12 Humidity Resistance (see 4.5.25)

The finished wire shall be in accordance with the insulation resistance specified in the in the detail specification.

3.6.13 Surface Resistance (see 4.5.26)

The finished wire shall be in accordance with the surface resistance specified in the detail specification.

3.6.14 Smoke Resistance (see 4.5.27)

The finished wire shall exhibit no visible smoke.

3.6.15 Flame Resistance “Flammability” (see 4.5.18)

Unless otherwise specified in the detail specification, any flame in the wire insulation shall be self extinguishing within a maximum of 3 seconds after removal of the external flame source from the insulation. When specified in the detail specification, the flame travel shall not exceed the specified length.

3.6.16 Wet Arc Propagation Resistance (see 4.5.31)

When wet arc propagation resistance is required in the detail specification, a minimum of 67 total wires for medium weight wire and 64 total wires for light weight wire shall pass the wet dielectric test. No more than three wires shall fail the wet dielectric test in any one bundle. The actual damage area shall not be more than 3 inches in any one wire.

SAENORM.COM : Click to view the full PDF of as22759b

3.6.17 Dry Arc Propagation Resistance (see 4.5.32)

When the finished wire dry arc propagation is required in the detail specification, a minimum of 67 total wires for medium weight wire and 64 total wires for light weight wire shall pass the wet dielectric test. No more than three wires shall fail the wet dielectric test in any one bundle. The actual damage area shall not be more than 3 inches in any one wire.

3.6.18 Dynamic Cut-through (see 4.5.33)

When dynamic cut-through is required in the detail specification, the minimum average dynamic cut-through (pounds) at a given temperature shall be tested in accordance with 4.5.33 except that the cutting blade edge shall be a 0.005 inch radius ± 0.001 inch radius.

3.6.19 Forced Hydrolysis (see 4.5.34)

When the forced hydrolysis is required in the detail specification, the insulation shall exhibit no dielectric breakdown.

3.6.20 Insulation Crosslink Proof / Accelerated Aging / Short-Term Thermal Stability (see 4.5.21)

When the test is required in the detail specification, change in marking, color, or conductor pitting shall not be considered. There shall be no observed cracks or splits when subjected to the bend test and no dielectric breakdown of the insulation.

3.6.21 Thermal Index (see 4.5.35)

When the thermal index is required in the detail specification, the finished wire shall have the thermal index rating at the time and temperature specified.

3.6.22 UV Laser Marking (see 4.5.36)

When the UV laser marking is required in the detail specification, the finished wire outer surface shall be ultraviolet (UV) laser markable. Unless otherwise specified in the detail specification, the mark shall meet a minimum contrast level of 55%.

3.6.23 Continuous Lengths (see 4.5.28)

The individual continuous lengths of wire in each qualification lot shall be of such footage that when inspected the qualification lot shall conform to the Schedule A continuous length requirements of Table 2 or to the Schedule B continuous length requirements of Table 3, as applicable. Unless the contract or order that was used to produce the qualification lot specifies otherwise, the footage of the individual continuous lengths in each spool or reel shall be marked on the spool or reel in the sequence in which the lengths will be unwound from the spool. For production lots (see 5.1.1), the applicable schedule shall be as specified in the detail specification.

TABLE 2 - MINIMUM CONTINUOUS WIRE LENGTHS (SCHEDULE A REQUIREMENTS)

Wire Size (Range)	Required Minimum Percent of the Total Inspection Lot Footage in Continuous Lengths Greater Than			
	300 ft	100 ft	50 ft	25 ft
30-20	50%	80%	100%	—
18-14	30%	80%	100%	—
12-10	—	50%	80%	100%
8-4	—	20%	50%	100%
2-1	—	—	50%	100%
0-0000	—	—	30%	100%

SAENORM.COM : Click to view the full PDF of as22759b

TABLE 3 - MINIMUM CONTINUOUS WIRE LENGTHS (SCHEDULE B REQUIREMENTS)

Wire Size Range	Required Minimum Percent of the Total Inspection Lot Footage in Continuous Lengths Greater Than				
	500 ft	250 ft	100 ft	50 ft	25 ft
30-6	85%	—	100%	—	—
4-2	—	85%	—	100%	—
1-0000	—	—	85%	—	100%

4. QUALITY ASSURANCE PROVISIONS

4.1 Responsibility for Inspection

Unless otherwise specified in the contract or purchase order, the supplier is responsible for the performance of all contract inspection requirements as specified herein. Except as otherwise specified in the contract or purchase order, the supplier may use any facilities suitable for the performance of the inspection requirements specified herein. The purchaser or qualifying activity has the right to perform any of the inspections set forth in the standard where such inspections are deemed necessary to assure supplies and services conform to prescribed requirements.

4.1.1 Responsibility for Compliance

All items must meet all applicable requirements of this product standard. The inspection set forth in this standard shall become a part of the supplier's overall inspection system or quality program. The absence of any inspection requirements in the standard shall not relieve the supplier of the responsibility of assuring that all products comply with all requirements of the contract. Sampling in quality conformance does not authorize submission of known defective material, either indicated or actual, nor does it commit the purchaser to acceptance of defective material.

4.1.2 Classification of Inspections

The inspection requirements under this specification are classified as follows:

a. Supplier process inspections (see 4.3)

b. Qualification inspections (see 4.4)

c. Quality conformance inspections (see 4.4.3)

d. Inspection of packaging (see Section 5)

4.2 Standard Test Conditions

Unless otherwise specified herein or in the detail specification, all measurements and tests shall be made at temperatures of 15 to 35 °C (59 to 95 °F) at air pressure of 650 to 800 millimeters of mercury, and a relative humidity of 45 to 75%. Whenever these conditions must be closely controlled in order to obtain more reproducible results; for referee purposes, temperature, relative humidity, and atmospheric pressure conditions of 25 +0, -2 °C (77 + 0, -3.6 °F), 50% ± 12% Relative Humidity, and 650 to 800 millimeters of mercury shall be used.

4.2.1 Test Equipment and Inspection Facilities

Test and measuring equipment and inspection facilities of sufficient accuracy, quality, and quantity to permit performance of the required inspection shall be established and maintained by the supplier. The establishment and maintenance of a calibration system to control the accuracy of the measuring and test equipment shall be in accordance with ANSI/NCSL Z540-1 or equivalent standards.

4.3 Process Controls

The supplier shall control all processes in accordance with AS9003 or equivalent. Independent certification of the processes is not required, however the qualifying activity reserves the right to inspect any of the supplier's processes in accordance with AS9003. Failure to comply because of the qualifying activity inspection may result in qualification disapproval.

SAENORM.COM : Click to view the full PDF of as22759b

TABLE 4 - QUALIFICATION AND QUALITY CONFORMANCE REQUIREMENTS

Inspection Tests	Requirement Paragraph	Test Method Paragraph	Group 1, 2 & 3 Quality Conformance	In-process Quality Conformance
Conductor material	3.3.1	4.5.1.1		4.4.3.1
Insulation material	3.3.2	4.4.1.2		4.4.3.1
Conductor and insulation splices	3.4.1 & 3.4.2	4.4.3.2.3		4.4.3.1
Primary insulation flaws	3.5.1	4.4.3.2.4		4.4.3.1
Insulation circumferential elongation	3.5.7	4.4.3.2.5		4.4.3.1
Conductor construction	3.4.1	4.5	1	
Conductor elongation	3.4.1.1.1	4.5.12	1	
Conductor tensile break strength	3.4.1.1.2	4.5.12.2	1	
Conductor stranding	3.4.1.2	4.5	1	
Conductor diameter	3.4.1.3	4.5.2	1	
Conductor resistance	3.4.1.4	4.5.11	1	
Insulation construction	3.4.2	4.5	1	
Finished wire construction	3.5	4.5	1	
Insulation stripping	3.5.2	4.5.4	1	
Insulation color marking	3.5.5	4.5	1	
Insulation identification printed marking	3.5.6	4.5	1	
Insulation resistance	3.5.8	4.5.7	1	
Diameter 5/	3.5.9	4.5.3	1	
Weight	3.5.10	4.5.5	1	
Insulation state of sinter	3.5.11	4.5.37	1	
Workmanship	3.5.12	4.5	1	
Marking durability 5/	3.6.1	4.5.9	1	
Insulation concentricity and wall thickness	3.5.3	4.5.13	2	
Insulation blocking 2/	3.6.3	4.5.10	2	
Conductor strand adhesion	3.6.4	4.5.30	2	
Conductor solderability 4/	3.6.5	4.5.29	2	
Insulation shrinkage 5/	3.6.6	4.5.14	2	
Insulation low temperature resistance 5/	3.6.7	4.5.16	2	
Insulation thermal shock 5/	3.6.8	4.5.17	2	
Insulation crosslink proof / accelerated aging / short-term thermal stability 5/	3.6.20	4.5.21	2	
Wicking	3.6.9	4.5.15	2	
Insulation wrap 5/	3.6.2	4.5.8	2	
Finished wire insulation flaw	3.5.4	4.5.6	3	
Continuous length	3.6.23	4.4.4.1.3 & 4.5.28	4	
Life cycle 5/	3.6.10	4.5.19		
Fluid immersion 1/	3.6.11	4.5.24		
Humidity resistance 2/	3.6.12	4.5.25		
Surface resistance	3.6.13	4.5.26		
Smoke resistance 2/	3.6.14	4.5.27		
Flame resistance 2/	3.6.15	4.5.18		
Wet arc propagation 1/	3.6.16	4.5.31		
Dry arc propagation 1/	3.6.17	4.5.32		

SAENORM.COM : Click to view the full PDF of as22759b

TABLE 4 - QUALIFICATION AND QUALITY CONFORMANCE REQUIREMENTS (Continued)

Inspection Tests	Requirement Paragraph	Test Method Paragraph	Group 1, 2 & 3 Quality Conformance	In-process Quality Conformance
Dynamic cut-through 1/	**3.6.18**	**4.5.33**		
Forced hydrolysis 1/	**3.6.19**	**4.5.34**		
Thermal index 1/ 3/	**3.6.21**	**4.5.35**		
UV laser marking 1/	**3.6.22**	**4.5.36**		

1/ Not required for retention of qualification unless materials have been changed since initial qualification.

2/ Required to be performed at four year intervals after initial qualification unless materials have been changed since initial qualification.

3/ Initial qualification approval shall not be withheld during the thermal index test period. At the request of the qualifying activity, the supplier will provide a summary of results at regular intervals.

4/ For silver coated conductor, required to be performed only at four year intervals after initial qualification unless materials have been changed since initial qualification.

5/ Qualification tests shall only be performed by the qualifying activity unless otherwise specified in the detail specification (see 4.4). This requirement does not relieve the supplier (manufacturer) from performing the specified quality conformance tests.

SAENORM.COM : Click to view the full PDF of as22759b

4.4 Qualification Inspections

Qualification inspections: qualification inspections include the initial qualification inspection (4.4.1) and inspection for retention of qualification (4.4.2). The qualifying activity shall perform the tests designated in table 4. The qualifying activity shall provide a data package to the supplier. The supplier is not required to perform the tests. This requirement does not relieve the supplier (manufacturer) from performing the specified quality conformance tests.

4.4.1 Initial Qualification Inspection

Initial qualification inspection shall consist of all the tests and examinations of this specification except the examination of packaging. Performance of the inspection shall be the responsibility of the qualification applicant under authorization of the qualifying activity (see 6.3). The qualifying activity shall authorize to the applicant to begin qualification testing by a written notice that describes the requirements of submission in accordance with this specification. The qualification applicant shall furnish test results, certifications, and tested samples or untested product (when requested) to the qualifying activity (see 4.4.1.3). Certifications shall be provided on government form DD Form 1718, “Certification of Qualified Products” or equivalent. Detail test results needed to confirm certification requirements shall be provided upon request from the qualifying activity (see 6.1).

4.4.1.1 Sampling for Initial Qualification Inspection

A finished wire length shall be obtained from the continuous length qualification lot (see 3.6.20). Except as provided under qualification by similarity in 4.4.1.2, a finished wire sample of the required length shall be selected from Table 5 for each size range for which qualification is desired in the applicable detail specification. The sample may be any size wire within the specified size range.

TABLE 5 - QUALIFICATION WIRE LENGTH REQUIREMENTS

Wire Size Range	Feet
30 through 28	200
26 through 20	200
18 through 14	200
12 through 10	100
8 through 4	100
2 and larger	100

4.4.1.2 Samples for Initial Qualification by Similarity

Qualification by similarity is applicable where a group of two or more detail specifications cover wires which are identical in materials and construction except that the conductor is different in each detail specification. In such event, the qualification applicant may select the samples specified in 4.4.1.1 for any size range or ranges of any detail specification in the similar group listed in Table 6. Approval of the finished wire qualification sample shall also qualify the same wire size range or ranges in each of the other detail specifications for which only the conductor is different. Also, where a requirement is more rigorous for a wire being qualified by similarity than for the wire undergoing complete test, the sample undergoing complete test must meet the more rigorous requirement of the similar wire in order to qualify the similar wire (e.g., if the finished wire sample is a 150 °C rated wire and the wire being qualified by similarity is rated at 200 °C, the finished wire sample must pass the thermal shock test at 200 °C in order to qualify the 200 °C wire). Changes in the properties of the less rigorous conductor construction shall not be considered as part of the more rigorous test results. Similarity groups not defined in Table 6 shall be coordinated with the qualifying activity prior to testing.

TABLE 6 - WIRE QUALIFICATION SIMILARITY GROUPS

Group	Detail Specification	Group	Detail Specification	Group	Detail Specification
1	/1, /2	7	/16, /17	13	/81, /82
2	/5, /6	8	/18, /19	14	/83 - /88
3	/7, /8	9	/28, /29, /30, /31	15	/89, /90
4	/9, /10, /20, /21	10	/32, /33, /44 - /46	16	
5	/11, /12, /22, /23	11	/34, /35, /41 - /43	17	
6	/14, /15	12	/80, /91, /92		

NOTE: For purposes of determining identity of construction in detail, specifications under the similarity provision, small differences in specified finished wire diameter or weight that are obviously due to differences in the specified conductor shall not be considered as constituting differences in the construction of the wires.

4.4.1.3 Submission of Qualification Results and Samples

Unless otherwise specified by the qualifying activity (see 6.1), the supplier shall only provide the test results with copies of all certifications. The format of the test report shall be specified by the qualifying activity. When requested by the qualifying activity, the supplier shall provide tested and/or untested samples. The qualifying activity shall specify what types of tested samples shall be provided, and how the tested samples shall be identified and packaged. Untested samples shall be taken from the same lot or lots as tested by the supplier and plainly identified by securely attached durable tags marked with the information listed below. The tags must be stamped by the supplier's and/or qualifying activity designated Quality Assurance Representative (QAR) inspector as representative samples of the manufacturer's normal production capability. Samples submitted without the stamp will not be accepted.

Sample for qualification tests: WIRE, ELECTRICAL, FLUOROPOLYMER-INSULATED, COPPER OR COPPER ALLOY
Detail Specification part number:
Manufacturer's name and code number (Publication H4/H8):
Manufacturer's part number:
Place and date of manufacture of sample:
Submission information: Submitted by (name) (date) for qualification tests in accordance with the requirements of AS22759 under authorization (reference authorizing letter).
Material composition: When specifically requested, a comprehensive description and prime manufacturer's name and formulation number of the base materials from which the product is made shall be provided (This information will not be divulged by the qualifying activity).

4.4.2 Retention of Qualification

Inspections of product for retention of qualification shall be made at two-year intervals after the supplier's initial acceptance date for qualification approval. The qualifying activity may establish a different retention of qualification due date. Failure of the supplier to submit retention of qualification test report or certification within 30 days after the end of the two-year reporting period may result in the removal of the product or products from the Qualified Products List (QPL).

SAENORM.COM : Click to view the full PDF of as22759b

4.4.2.1 Retention of Qualification Tests and Samples

One wire size from each initial qualification approved similarity group listed in Table 6 shall be tested. The samples shall be from current production and shall be inspected in accordance with Table 4.

4.4.2.2 Procedure for Retention of Qualification Inspection

It is the supplier's responsibility to submit retention qualification data at the required interval. Unless otherwise notified by the qualifying activity, the data shall be provided in the same format as provided for initial qualification. The qualifying activity is not required to provide an authorization notice to begin retention of qualification testing. The qualifying activity reserves the right to monitor the testing, and request tested and/or untested samples, but the request must be received by the supplier six months prior to the retention of qualification interval.

4.4.2.3 Effect of Failure in Retention of Qualification Inspection

If a failure occurs in the tests for retention of qualification, no wire represented by the sample, nor any other wire manufactured with the same materials and processes, which has not already been submitted for quality conformance inspection, shall be offered for acceptance until the cause for failure has been determined and concurred with by the qualifying activity as not affecting the ability of the wire to meet qualification inspection requirements.

4.4.2.4 Retention of Qualification by Certification

If there has been no production since the last retention of qualification interval, retention of qualification shall consist of a completed government DD Form 1718, "Certification of Qualified Products". The form shall be submitted to the qualifying activity by the periodic qualification due date. When production resumes following a certification submission, the manufacturer shall perform qualification retention tests on the production lot and submit in accordance the retention of qualification requirements. Retention of qualification by certification shall not be permitted for two successive retention of qualification periods.

4.4.3 Quality Conformance Process Control Inspections

4.4.3.1 Quality Conformance Process Control Inspection

This inspection comprises quality conformance tests and examinations of such a nature that they are impossible or impractical to perform on the finished wire and therefore are conducted at the most appropriate stage of the receiving or the manufacturing operations. The required process control inspection tests are listed in Table 4. Process control inspection shall be performed on every lot of wire acquired under this specification. For quality conformance of conductors procured to MIL-DTL-29606, use ASQC Z-1.4 in lieu of MIL-STD-105, ASQC A8402 in lieu of MIL-STD-109, and ANSI-Z540.1 in lieu of MIL-STD-45662.

4.4.3.2 Sampling for Quality Conformance Process Control Inspection

4.4.3.2.1 Conductor Material Sample

Three ten-foot lengths of conductor, prior to insulation, shall be selected in such manner as to be representative of the material to be used in each inspection lot of finished wire.

4.4.3.2.2 Insulation Material Sample

When extruded insulation is used, three samples representative of each inspection lot shall be selected after extrusion. When unsupported tape, coated glass tape, or coated glass yarn is used, three samples representative of each inspection lot shall be selected before application to the wire.

SAENORM.COM : Click to view the full PDF of as22759b

4.4.3.2.3 Splice Samples (see 4.5.1.4)

The conductor and insulation tape samples shall be subject to examination for conformity of splice, if present. For qualification purposes, the supplier's splicing methods may be observed during the insulation process at the discretion of the qualifying activity representative. The options of 4.1 are also applicable.

4.4.3.2.4 Primary Insulation Flaws Sample (see 4.5.1.3)

When a test for flaws of the primary insulation is required, test 100% of the wire after application of the insulation and prior to the application of any additional layers. Portions showing dielectric breakdown under test shall be cut out or removed and testing of the balance of production shall be resumed.

4.4.3.2.5 Circumferential Elongation Sample (see 4.5.1.2.3)

When polytetrafluoroethylene (PTFE) or abrasion resistant (mineral filled) PTFE is used, five samples representative of each inspection lot shall be selected after extrusion. Circumferential elongation testing is not required for other insulation types.

4.4.3.3 Rejection and Retest in Process Control Inspection

The requirements of this paragraph do not apply to incoming conductor or insulation material requirements prior to wire processing or to primary insulation flaws. When a process control sample selected during a production run fails to meet the specified requirements, further processing of that lot shall cease until the extent and cause of the failure have been determined and resolved. If corrective action is taken on the same lot in which the failure occurred, the appropriate process control tests shall be repeated. Corrective actions taken on failing lots shall be communicated to the purchaser.

4.4.4 Quality Conformance Inspection of Finished Wire

The quality conformance inspection of finished wire shall consist of the examinations and tests listed in Table 4 (Groups 1-4). Unless otherwise specified, the inspection shall be performed on every lot of wire acquired under the specification.

4.4.4.1 Sampling for Quality Conformance Inspection of Finished Wire (Group 1 and 2 Tests)

For purposes of this specification, the following shall apply:

a. Lot: The Inspection lot shall include all wire of one part number subjected to inspection at one time.

b. Unit of product: The unit of product for determining lot size for sampling shall be one continuous length of wire as offered for inspection.

c. Sample unit (Groups I and II tests of Table 4): The sample unit for Groups 1 and 2 tests, except for the Group I insulation resistance test, shall consist of a single piece of finished wire chosen at random from the inspection lot and of sufficient length to permit all applicable examinations and tests. Unless otherwise specified, the length of the sample unit for Group I tests of Table 4, other than insulation resistance, shall be 20 feet and the length of the sample unit for Group II tests shall be 25 feet. Not more than one sample unit for each group of tests shall be taken from a single unit of product.

d. Sample unit for insulation resistance test (Table 4 Group 1): The sample unit for the Group I insulation resistance test shall be a specimen at least 26 feet in length selected at random from finished wire which has passed the Group 3 dielectric test. It is optional whether the specimen is tested on the reel or removed from the reel for the test, provided the length of the specimen can be determined.

4.4.4.1.1 Finished Wire Inspection Levels and Acceptable Quality Levels (AQL) (Groups 1 and 2 Tests)

For Group I characteristics, including the insulation resistance test, the inspection level shall be S-2 and the AQL shall be 6.5% defective units in accordance with ASQC-Z1.4 and the definitions herein (see 6.2). For Group II characteristics, the inspection level shall be S-3 and the AQL shall be 1.5% defective units.

SAENORM.COM : Click to view the full PDF of as22759b

4.4.4.1.2 Sampling and Acceptance Insulation Flaws Test (Group 3 of Table 4)

One hundred percent of the finished wire, and every length of the wire shall be subjected fully to the test for insulation flaws. Insulation breakdowns resulting from the test, and ends or portions not subjected to the test shall be marked or cut out of the finished wire. When specified in the contract or order, dielectric failure, untested portions, or portions that have been exposed to fewer or more than the specified number of pulses or cycles are permitted to be marked by stripping the insulation or any other method specified in the contract in lieu of being cut out the wire.

4.4.4.1.3 Sampling and Acceptability Levels for Continuous Lengths (Group 4)

The inspection level and acceptable quality level for this examination shall be as required for the applicable procedure of 4.5.28.

4.4.4.2 Effect of a Quality Conformance Process Control Failure on Finished Wire

Quality conformance testing of finished wire may be continued during the investigation of the failure of a process control sample, but there shall be no final acceptance of the finished product until it is determined that the lot meets all the quality conformance requirements of Table 4.

4.4.4.3 Nonconforming Inspection Lots

Disposition of inspection lots found unacceptable under quality conformance inspection shall be in accordance with ASQC-Z1.4.

4.5 Test Methods

Unless otherwise specified all samples shall be examined carefully to determine conformance to this specification and to the applicable detail specifications with regard to requirements not covered by specific test methods. Certification to the requirements not covered by specific test methods is required for qualification. The qualifying activity reserves the right to request documentation to substantiate the certification.

4.5.1 Process Control Inspection Test Methods

4.5.1.1 Conductor Material

Test data or control processes used to demonstrate compliance to conductor material requirements shall be provided to the qualifying activity upon request. Certification from the original material supplier may be submitted as an alternative to performing the test.

4.5.1.2 Insulation Material

Samples of insulation material shall be subjected to the following tests. Certification from the original material supplier may be accepted as an alternative to performing these tests.

4.5.1.2.1 Tensile Strength and Elongation of Unsupported Tapes

Unsupported tapes shall be subjected to the tensile strength tests and elongation tests of ASTM Standard D 882, Method A or B, except that there shall be no limitation as to width of the tape.

4.5.1.2.2 Tensile Strength and Elongation of Extruded Fluoropolymer Primary Insulation or Jacket

Unless otherwise specified, specimens of extruded fluoropolymer primary insulation or jacket shall be carefully removed from the conductor and tested for tensile strength and elongation in accordance with MIL-STD-2223 method 2001, except that the rate of travel of the power-actuated grip of the tensile machine shall be 10 inches per minute ± 2 inches per minute for tests of polyvinylidene fluoride specimens.

SAENORM.COM : Click to view the full PDF of as22759b

4.5.1.2.3 Circumferential Elongation (extruded PTFE or abrasion resistant PTFE insulation only)

The test measures the elongation of a thin slug of wire insulation in the circumferential (radial) direction. The circumferential elongation shall be performed in accordance with MIL-STD-2223 method 2005.

4.5.1.2.4 Dielectric Strength of Unsupported Tapes

Samples of tape shall be subjected to the short-time test of ASTM Standard D 149. Stainless steel electrodes 1/4 inch in diameter and having edges rounded to 1/32-inch radius shall be used. The radius must be accurate, and should be checked on an optical comparator. Voltage shall be increased at approximately 500 volts per second. Tapes shall be tested with oil as the medium. The oil shall be as specified in MIL-L-23699.

4.5.1.2.5 Specific Gravity of Unsupported Tapes

Samples of tapes shall be subjected to Test Method A of ASTM Standard D 792. A suitable wetting agent shall be added to the water to assist in complete wetting of the surfaces of the specimen.

4.5.1.2.6 PTFE Content of Coated Fibrous Glass Yarns and Tapes

A weighed specimen of the coated fibrous glass shall be ignited for 4 hours in a muffle furnace at 700 °C. The residue shall be cooled and weighed and the loss in weight calculated as PTFE content of the coated tape or yarn.

4.5.1.3 Primary Insulation Flaws

One of the following methods shall be used to determine the presence of faulty areas in the primary insulation. One hundred percent of the wire shall be tested, and any portion showing insulation breakdown shall be cut out of the wire on each side of the failure. The test voltage shall be specified in the detail specification.

4.5.1.3.1 Spark Test of Primary Insulation

The wire, after the application of the primary insulation and prior to the application of any other material, shall be passed through a chain electrode spark test device using the voltage and frequency specified in the applicable detail specification. The electrode shall be of a bead chain or fine mesh construction that will give intimate metallic contact with most of the insulation surface. Electrode length and speed of wire movement shall be such that the insulation is subjected to the test voltage for a minimum of 0.2 second.

4.5.1.3.2 Impulse Dielectric Test of a Primary Insulation

Perform in accordance with impulse dielectric test (see 4.5.6.1). Unless otherwise specified on the detail specifications, perform the impulse dielectric test at 6.0 kV (peak).

4.5.1.3.3 High Frequency Spark Test of Primary Insulation

Perform in accordance with high frequency spark test (see 4.5.6.2). Unless otherwise specified in the detail specification. Perform the high frequency spark test at 4.2 kV (rms).

4.5.1.4 Conductor or Insulation Splices

Certification of conformity to the splicing requirements is required. Test data or control processes used to demonstrate compliance to conductor or insulation splice requirements shall be provided to the qualifying activity or purchaser upon request.

4.5.2 Conductor Diameter

The conductor diameter shall be measured in accordance with MIL-STD-2223 method 5001.

SAENORM.COM : Click to view the full PDF of as22759b

4.5.3 Diameter

The finished wire diameter shall be measured in accordance with MIL-STD-2223 method 6001. For qualification, an in-process method for measure the diameter maybe used provided a summary of the results is submitted to the qualifying activity.

4.5.4 Insulation Stripping

The insulation shall be removed in accordance with the recommended tool specified in AS5457. Without touching the conductor after the insulation is removed, the conductor shall be examined in accordance with AS5457.

4.5.4.1 Insulation Strip Force

A 0.25 inch insulation slug shall be stripped from the wire and the strip force measured in accordance ASTM D 3032 Section 27.

4.5.5 Weight

The weight of each lot of finished wire shall be determined by Procedure I of MIL-STD-2223 method 6002. Lots failing to meet the wire weight requirement of the applicable detail specification when tested in accordance with Procedure I shall be subjected to Procedure II of MIL-STD-2223 method 6002. All reels or spools failing to meet the requirements of the applicable detail specification shall be rejected. The quality conformance sampling plans are not applicable when Procedure II is used. Either method maybe used to submit qualification data including corrective action (if applicable).

4.5.6 Finished Wire Insulation Flaws

One of the following methods shall be used. One hundred percent of the finished wire shall be tested, and any portion showing insulation breakdown shall be cut out of the wire including at least 2 inches of wire on each side of the failure.

4.5.6.1 Impulse Dielectric Test

Finished wire shall be tested in accordance with MIL-STD-2223 method 3002 at the voltage specified in the applicable detail specification. Unless otherwise specified in the detail specifications, perform the impulse dielectric test at 8.0 kV (peak) for finished wire.

4.5.6.2 High Frequency Spark Test

As an alternative to the impulse dielectric test, the 3 KHz high frequency spark test in accordance with MIL-STD-2223 method 3008 is permitted for the detection of flaws in finished wire, unless otherwise specified in the detail specifications, perform the high frequency spark test at 5.7 kV (rms) for finished wire.

4.5.7 Insulation Resistance

The insulation resistance test shall be performed in accordance MIL-STD-2223 method 3003.

4.5.8 Insulation Wrap

The wrap test shall be performed in accordance with the following methods:

4.5.8.1 For Extruded Insulation ("wrap back test")

The wire shall be tested in accordance with MIL-STD-2223 method 2003 except wires size 4 and smaller shall be wrapped back on itself. For size two and larger the mandrel size shall be as specified in the detail specification. The air oven temperature shall be as specified in the detail specification.

SAENORM.COM : Click to view the full PDF of as22759b

4.5.8.2 For Tape or Braid Insulation (mandrel test)

The wrap test shall be performed in accordance with MIL-STD-2223 method 2002 except the mandrel size shall be specified in the detail specification. Each specimen shall be subjected to a wet dielectric test.

4.5.9 Marking Durability

The durability of product identification and color markings applied to the wire for coding shall be evaluated at 20 to 25 °C (68 to 77 °F) in accordance with MIL-STD-2223 method 6004. If there is a continuous line of erasure or obliteration through the stripe, band, or printed identification marking exposing the primary insulation, the specimen shall be considered as having failed. Three specimens shall be tested from each sample unit and failure of any specimen shall constitute failure of the sample unit.

4.5.10 Insulation Blocking

The blocking test shall be performed in accordance with MIL-STD-2223 method 4007. The temperature shall be as specified in the detail specification.

4.5.11 Conductor Resistance

The DC resistance of the conductor shall be measured in accordance with MIL-STD-2223 method 5003 except that the wire shall be tested dry without immersion.

4.5.12 Conductor Elongation and Tensile Break Strength

The conductor elongation shall be performed in accordance with the following test method:

4.5.12.1 Soft or Annealed Copper

Elongation tests of soft or annealed copper conductors shall be performed in accordance with MIL-STD-2223 method 5002

4.5.12.2 High Strength Copper Alloy

Elongation and tensile break strength tests of high strength alloy conductors shall be performed in accordance with MIL-STD-2223 method 5002.

4.5.13 Insulation Concentricity and Wall Thickness

The concentricity and wall thickness of the primary insulation and of the finished wire shall be determined in accordance with MIL-STD-2223 method 6003.

4.5.14 Insulation Shrinkage

The shrinkage test shall be performed in accordance with MIL-STD-2223 method 4005. Unless otherwise specified in the detail specification, the shrinkage of the insulation shall then be measured as the greatest additional distance that any layer of the insulation, including jacket if present, has receded from either end of the conductor; that is, the measurement obtained at the end showing the greater shrinkage shall be considered the shrinkage of the specimen.

4.5.15 Wicking

Wicking shall be performed in accordance with MIL-STD-2223 method 1005. Procedure I (B) or II (A) shall be specified in the applicable detail specification.

SAENORM.COM : Click to view the full PDF of as22759b

4.5.16 Insulation Low Temperature Resistance

The low temperature (cold bend) test shall be performed in accordance with MIL-STD-2223 method 2004.

4.5.17 Insulation Thermal Shock

The thermal shock resistance shall be performed in accordance with MIL-STD-2223 method 4004. For purposes of this test, insulation is defined as all layers of non-conducting material covering the electrical conductor, e.g., primary insulation, all tapes and braids, and the jacket.

4.5.18 Flammability

The flammability shall be performed in accordance with the following test method:

4.5.18.1 Apparatus

The flammability test chamber shall be approximately 1 foot square by 2 feet in height, and shall be open at top and front to provide adequate ventilation for combustion but prevent drafts. Means shall be provided in the chamber to hold the test specimen taut at an angle of 60 degrees from horizontal in a vertical plane parallel to and about 6 inches in front of the rear wall of the chamber. The test burner shall be a Bunsen type gas burner having a 1/4 inch inlet, a needle valve in the base for gas adjustment, a bore of 3/8 inch nominal, and a length of approximately 4 inches above the air inlets. The burner shall be fitted with a wing top flame spreader having a 1/16 inch by 2 inch opening.

4.5.18.2 Procedure

A 24-inch specimen of wire, marked at a distance of 8 inches from the lower end to indicate the point of contact for the test flame, shall be clamped tautly, at 60 degrees from horizontal, in the specimen holder of the test chamber. The burner shall be adjusted to deliver an all-blue flame, 2 inches high, at a temperature of 955 °C ± 30 °C (1751 °F ± 54 °F), as measured with a thermocouple pyrometer. With the burner held at a 90 degree angle to the wire specimen and the long dimension of the flame spreader parallel to the axis of the specimen, the hot tip of the flame shall be applied to the wire so that the midpoint of the flame touches the 8-inch mark on the specimen. The period of flame application shall be 15 seconds for wire sizes 30 through 18, 30 seconds for sizes 16 through 12, 1 minute for sizes 10 through 4, and 2 minutes for larger sizes. At the close of the application period, the flame shall be withdrawn and the duration of the after flame and the burned length of the specimen shall be measured and recorded. When required by the applicable detail specification, the burned section of the wire specimen shall be subjected to the post-flame dielectric test of 4.5.18.3 are met. Breaking of the wire specimens in sizes 24 and smaller shall not be considered as failure provided the requirement for flame travel limits, when specified in the applicable detail specification, and duration of flame requirement are met.

4.5.18.3 Post-flame Dielectric Test

When a post-flame dielectric test is required, the specimen from the flame test shall be clamped firmly in a horizontal position, leaving the burned portion of the wire accessible to a contact plate jig equal to that shown in Figure 4. The bottom contact plate shall be placed underneath the wire and shall make contact with the center 1/2-inch area of the burned section of the wire on the side of the insulation that has been nearest the flame. The upper contact plate shall be placed on top of the specimen, directly over the bottom plate, and a 1/4-pound weight shall be placed on the upper plate, directly over the specimen, to insure contact with the burned area. The voltage specified in the applicable detail specification shall then be applied between the conductor of the specimen and the contact plates of the jig. The voltage shall be gradually increased at a uniform rate from zero to the specified voltage in 1/2 minute, maintained at that voltage for 1 minute, and gradually reduced to zero in 1/2 minute. There shall be no dielectric failure of the specimen under this test.

SAENORM.COM : Click to view the full PDF of as22759b

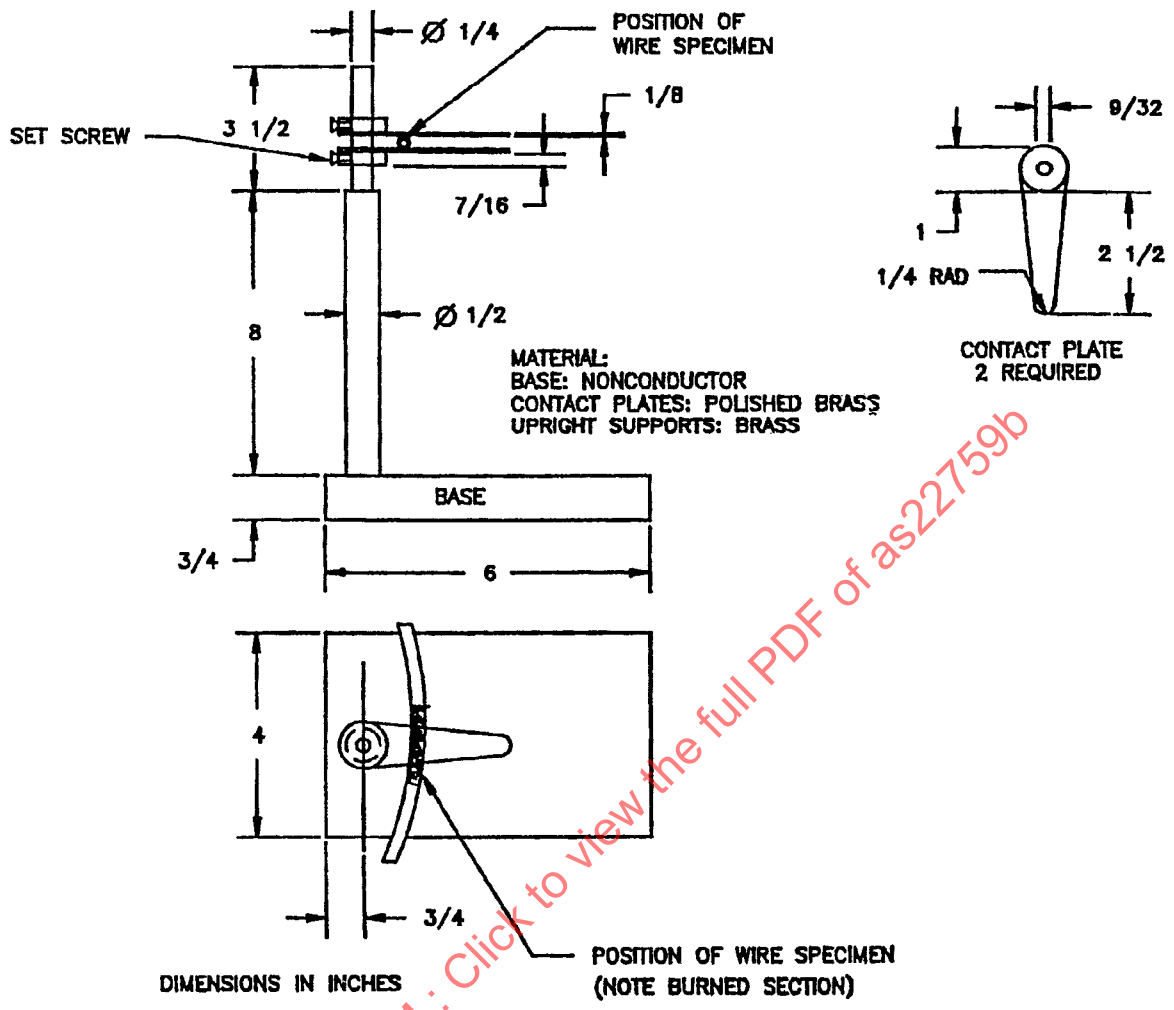

FIGURE 4 - CONTACT PLATE JIG FOR POST-FLAME DIELECTRIC TEST

SAENORM.COM : Click to view the full PDF of as22759b

4.5.19 Life Cycle

The life cycle test shall be performed in accordance with MIL-STD-2223 method 4001 for 120 hours (unless otherwise specified) at the temperature specified in the detail specification. The mandrel sizes and weights shall be as specified in the detail specification. The specimen shall be examined for color retention (3.5.5) prior to the bend test. The bend test shall be performed in accordance 4.5.22. The dielectric test shall be performed in accordance with 4.5.23.

4.5.20 Conductor Pitting

After the post-flame dielectric test, the insulation shall be removed from the specimen and the conductor shall be examined for pitting (see 6.2.3).

4.5.21 Insulation Crosslink Proof / Accelerated Aging / Short-Term Thermal Stability

The test shall be performed in accordance with MIL-STD-2223 method 4003 as specified in the detail specification. The mandrel sizes and weights shall be as specified in the detail specification. The bend test shall be performed in accordance 4.5.22. The dielectric test shall be performed in accordance with 4.5.23.