FEDERAL SUPPLY CLASS
5935

NOTICE

THIS DOCUMENT HAS BEEN TAKEN DIRECTLY FROM U.S. MILITARY SPECIFICATION MS3137E AND CONTAINS ONLY MINOR EDITORIAL AND FORMAT CHANGES REQUIRED TO BRING IT INTO CONFORMANCE WITH THE PUBLISHING REQUIREMENTS OF SAE TECHNICAL STANDARDS. THE INITIAL RELEASE OF THIS DOCUMENT IS INTENDED TO REPLACE MS3137E. ANY PART NUMBERS ESTABLISHED BY THE ORIGINAL SPECIFICATION REMAIN UNCHANGED.

THE ORIGINAL MILITARY SPECIFICATION WAS ADOPTED AS AN SAE STANDARD UNDER THE PROVISIONS OF THE SAE TECHNICAL STANDARDS BOARD (TSB) RULES AND REGULATIONS (TSB 001) PERTAINING TO ACCELERATED ADOPTION OF GOVERNMENT SPECIFICATIONS AND STANDARDS. TSB RULES PROVIDE FOR (A) THE PUBLICATION OF PORTIONS OF UNREVISED GOVERNMENT SPECIFICATIONS AND STANDARDS WITHOUT CONSENSUS VOTING AT THE SAE COMMITTEE LEVEL, AND (B) THE USE OF THE EXISTING GOVERNMENT SPECIFICATION OR STANDARD FORMAT.

ANY MATERIAL RELATING TO QUALIFIED PRODUCT LISTS HAS NOT BEEN ADOPTED BY SAE. THIS MATERIAL WAS PART OF THE ORIGINAL MILITARY SPECIFICATION AND IS REPRINTED HERE FOR HISTORIC REFERENCE ONLY.

SAENORM.COM : Click to view the full PDF of as31371a

SAE values your input. To provide feedback on this Technical Report, please visit http://www.sae.org/technical/standards/AS31371A

ISSUED 1997-10 REVISED 1998-01 REAFFIRMED 2009-06

PREPARED BY SUBCOMMITTEE AE-8C1

PROCUREMENT SPECIFICATION MIL-C-81703

SAE Aerospace
An SAE International Group

AEROSPACE STANDARD

CONNECTOR, PLUG, ELECTRIC, SOLDER TYPE, PUSH-PULL COUPLING SERIES 1 (CLASS E, P AND J)

AS31371
SHEET 1 OF 3

REV. A

SAE Technical Standards Board Rules provide that: "This report is published by SAE to advance the state of technical and engineering sciences. The use of this report is entirely voluntary, and its applicability and suitability for any particular use, including any patent infringement arising therefrom, is the sole responsibility of the user."

SAE reviews each technical report at least every five years at which time it may be reaffirmed, revised, or cancelled. SAE invites your written comments and suggestions.

Copyright 2009 SAE International
All rights reserved. No part of this publication may be reproduced, stored in a retrieval system or transmitted, in any form or by any means, electronic, mechanical, photocopying, recording, or otherwise, without the prior written permission of SAE.
TO PLACE A DOCUMENT ORDER: Tel: 877-606-7323 (inside USA and Canada) Tel: 724-776-4970 (outside USA)
Fax: 724-776-0790 Email: CustomerService@sae.org SAE WEB ADDRESS: http://www.sae.org

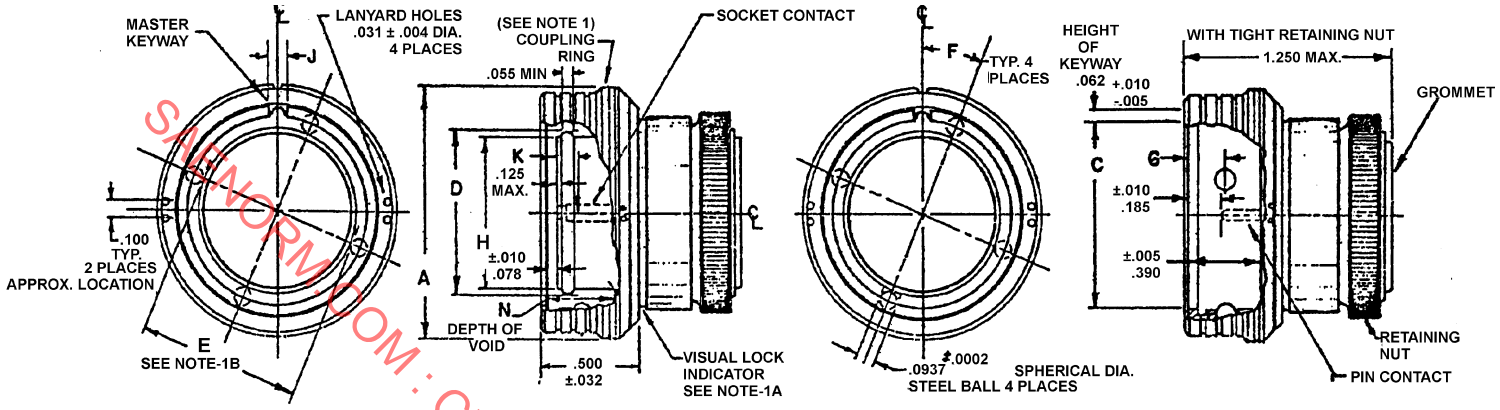

STYLE S (SOCKET INSERT) CLASS E STYLE P (PIN INSERT)

SHELL SIZE DASH NO.	A MAX. DIA. COUPLING RING	C MIN I.D. SHELL	D ±.006 AVERAGE DIA. INSERT SEAL	E MIN. DIA. BALL SPACING	F BALL LOCATION (ANGULAR)	G +.002 -.005 BALL LOCATION (DEPTH)	H ±.010 FRONT O.D. OF INSERT	J MAX WIDTH OF KEYWAY	N ±.031 DEPTH OF VOID	K POINT OF SPRING CONTACT	FOR INSERT ARRANGEMENT SEE DWG.
-3	.796	.444	.374	.391	30°		.344				MS 33698
-7	.933	.579	.490	.526			.460		IN	.138 MAX. MEASURE WITH SQUARE NOSE PIN HAVING BASIC DIAMETER OF MATING CONTACT	MS 33699
-12	1.140	.713	.630	.661			.600	.114	DISENGAGED		MS 33700
-19	1.228	.852	.770	.799	22 1/2°	.202	.740		POSITION		MS 33701
-27	1.383	1.007	.925	.954			.895		.310		MS 33702
-37	1.513	1.127	1.047	1.076			1.017				MS 33703

DIMENSIONS IN INCHES, UNLESS OTHERWISE SPECIFIED.
TOLERANCE: DECIMALS ±.016, ANGULAR TOLERANCE ±1/2°

NOTES:

1. COUPLING RING AND BALLS ARE SHOWN IN THE ENGAGED POSITION FOR CLARITY THIS POSITION SHALL ONLY BE POSSIBLE WHEN ENGAGED TO THE RECEPTACLE.

   IN THE NORMAL DISENGAGED POSITION THE FOLLOWING IS TRUE:
   A. THE VISUAL LOCK INDICATOR IS NOT IN VIEW.
   B. THE BALLS ARE RELEASED WHEN "E" MIN. EQUALS "C".

2. EXAMPLE OF PART NO. MS3137 E 19-50 S Y

THIS STANDARD TAKES PRECEDENCE OVER DOCUMENTS REFERENCED HEREIN. REFERENCED DOCUMENTS SHALL BE OF THE ISSUE IN EFFECT ON DATE OF INVITATION FOR BID.

SAENORM.COM : Click to view the full PDF of as31371a