FEDERAL SUPPLY CLASS

RATIONALE

THIS DOCUMENT HAS BEEN REAFFIRMED TO COMPLY WITH THE SAE 5-YEAR REVIEW POLICY.

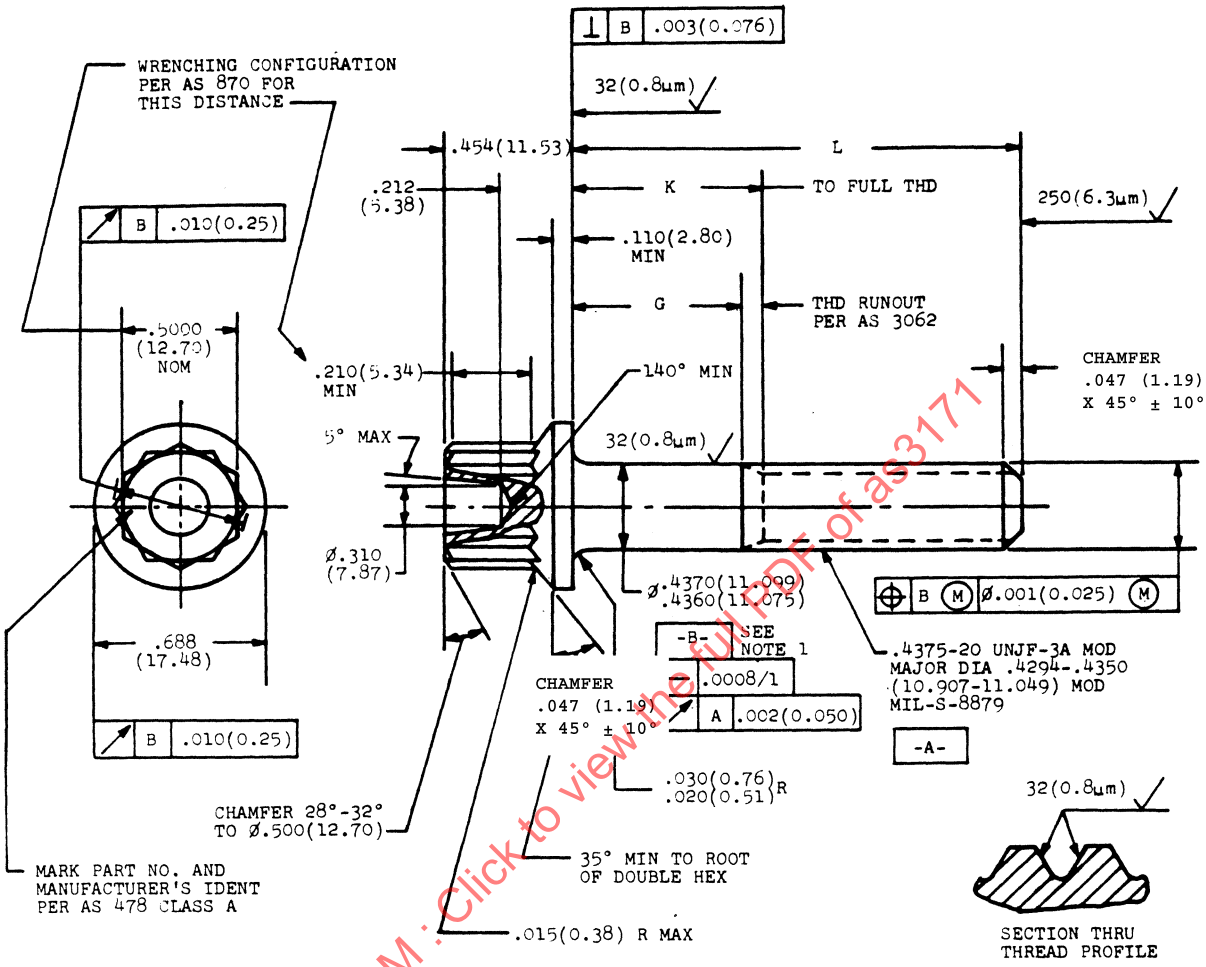

SAENORM.COM : Click to view the full PDF of as3171

1. FOR PART NUMBERS AS3171-03 THRU AS3171-11 THE THREAD PD SHALL REPLACE DATUM B.
2. MATERIAL: CORROSION AND HEAT RESISTANT ALLOY AMS 5643.
3. MANUFACTURING SPECIFICATION: AMS 7474.
4. FLUORESCENT PENETRANT INSPECTION PER AMS 2645.
5. SURFACE TEXTURE: ANSI B46.1-1962. UNLESS OTHERWISE SPECIFIED, SURFACES TO BE 125 MICROINCHES (3.2 MICROMETRES) EXCEPT UPSET HEAD.
6. BREAK SHARP EDGES .003-.015(0.08-0.38) UNLESS OTHERWISE SPECIFIED.
7. DIMENSIONS IN INCHES. METRIC CONVERSIONS ARE IN PARENTHESIS. UNLESS OTHERWISE SPECIFIED, TOLERANCES: LINEAR DIMENSIONS ±.010(0.025), ANGULAR DIMENSIONS ±5°. INTERNATIONAL SYSTEM UNITS (SI) SHOWN ARE FOR REFERENCE ONLY.
8. HEAD TO SHANK FILLET SHALL BE COLD ROLLED PER AMS 7474 AFTER HEAT TREATMENT TO REMOVE ALL VISUAL EVIDENCE OF GRINDING OR TOOL MARKS EXCEPT THAT DISTORTIONS AT A IN FIGURE 2 OF THE SPECIFICATION SHALL NOT BE PERMITTED ON THE HEAD BEARING AREA AND SHALL BE PERMITTED ON THE SHANK DIAMETER ONLY IF THE DISTORTION DOES NOT CAUSE THE SHANK DIAMETER TO EXCEED .4375(11.112) DIAMETER.
9. DIMENSIONING AND TOLERANCING: ANSI Y14.5-1973.
10. DO NOT USE UNASSIGNED PART NUMBERS.

THIRD ANGLE PROJECTION

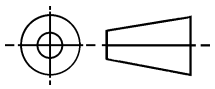

ISSUED 1976-03 REAFFIRMED 2006-10

PREPARED BY SAE COMMITTEE E-25, GENERAL STANDARDS FOR AEROSPACE PROPULSION SYSTEMS

SAE Aerospace
An SAE International Group

AEROSPACE STANDARD

BOLT, MACHINE - DOUBLE HEX EXTENDED WASHER HEAD, CLOSE TOLERANCE SHANK, AMS 5643, .4375-20, UNJF-3A

AS3171
SHEET 1 OF 2

SAE Technical Standards Board Rules provide that: "This report is published by SAE to advance the state of technical and engineering sciences. The use of this report is entirely voluntary, and its applicability and suitability for any particular use, including any patent infringement arising therefrom, is the sole responsibility of the user."

SAE reviews each technical report at least every five years at which time it may be reaffirmed, revised, or cancelled. SAE invites your written comments and suggestions.

Copyright 2006 SAE International
All rights reserved. No part of this publication may be reproduced, stored in a retrieval system or transmitted, in any form or by any means, electronic, mechanical, photocopying, recording, or otherwise, without the prior written permission of SAE.
TO PLACE A DOCUMENT ORDER: Tel: 877-606-7323 (inside USA and Canada) Tel: 724-776-4970 (outside USA)
Fax: 724-776-0790 Email: CustomerService@sae.org SAE WEB ADDRESS: http://www.sae.org