FEDERAL SUPPLY CLASS
5310

RATIONALE

FIGURE REVISED, THREAD SPEC UPDATED, NOTES UPDATED TO SHOW CONSOLIDATION AND LATEST SPECIFICATIONS.

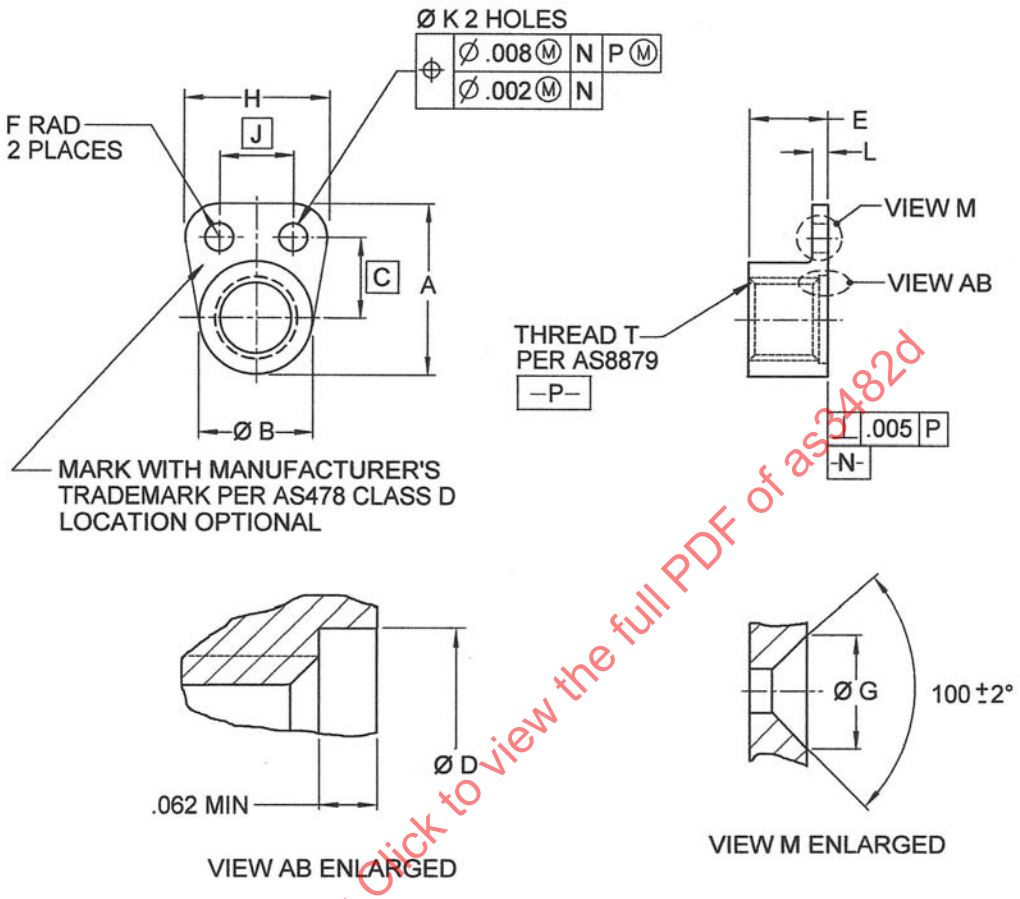

FIGURE 1

SAENORM.COM : Click to view the full PDF of as3482d

SAE values your input. To provide feedback on this Technical Report, please visit http://www.sae.org/technical/standards/AS3482D

THIRD ANGLE PROJECTION

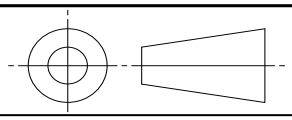

ISSUED 1991-02 REAFFIRMED 2007-06 REVISED 2014-08

CUSTODIAN: E-25

PROCUREMENT SPECIFICATION: AS4393

SAE INTERNATIONAL

AEROSPACE STANDARD

(R) NUT, SELF-LOCKING, PLATE, SIDE BY SIDE, REDUCED RIVET SPACING, LOW HEIGHT, UNS S66286, CLASS: 125 KSI/800 °F

AS3482
SHEET 1 OF 2

REV. D

SAE Technical Standards Board Rules provide that: "This report is published by SAE to advance the state of technical and engineering sciences. The use of this report is entirely voluntary, and its applicability and suitability for any particular use, including any patent infringement arising therefrom, is the sole responsibility of the user."

SAE reviews each technical report at least every five years at which time it may be revised, reaffirmed, stabilized, or cancelled. SAE invites your written comments and suggestions.

Copyright 2014 SAE International
All rights reserved. No part of this publication may be reproduced, stored in a retrieval system or transmitted, in any form or by any means, electronic, mechanical, photocopying, recording, or otherwise, without the prior written permission of SAE.
TO PLACE A DOCUMENT ORDER: Tel: 877-606-7323 (inside USA and Canada) Fax: 724-776-0790 Tel: +1 724-776-4970 (outside USA) Email: CustomerService@sae.org SAE WEB ADDRESS: http://www.sae.org